Form No. 3456-116 Rev A

TORO®

Count on it.

Parts Catalog

TimeCutter® 4275C

Riding Mower

Model No. 75743—Serial No. 413000000 and Up

Register at www.Toro.com.
Original Instructions (EN)

3456-116 A

Ordering Replacement Parts

To order replacement parts, please supply the part number, the quantity, and the description of each part desired.

Understanding Reference Numbers

Each identified part in an illustration has a reference number. The reference number for a part also appears in the parts list, along with other information about the part.

This catalog uses two special reference number formats, one to indicate parts in a service assembly and another to indicate the quantity of a given part in an illustration.

Service Assembly Reference Numbers

Parts in service assemblies have reference numbers in the form a:b. The a represents the reference number of the entire service assembly and the b represents a sequential number unique to each part within the service assembly.

For example, a wheel assembly might be identified by reference number 6, the tire by 6:1, the valve by 6:2, and the wheel by 6:3. When you order the assembly identified by reference number 6, you receive all parts identified by reference numbers 6:1,6:2, and 6:3. However, you may also order any part individually. Reference numbers of this type appear in illustration and in parts lists.

Reference Numbers Indicating Quantity

In an illustration, if a reference number indicates more than one part, the reference number has the form nX y. The n represents the quantity of the part, the X is the multiplication symbol, and the y represents the reference number.

For example, in an illustration, the reference number 2X 37 means that two of the parts identified by reference number 37 are indicated.

Contents

Frame Assembly 4
Deck Lift Assembly 6
Tire and Caster Assembly 8
Traction Drive Assembly 10
LH Hydro Transmission Assembly No. 139-7450 12
RH Hydro Transmission Assembly No. 139-7451 14
Brake Assembly 16
Rear Tire Assembly 18
Motion Control Assembly 20
Engine and Muffler Assembly 22
Fuel Pod and Body Styling Assembly 24
Electrical Assembly 26
42in Deck and Decal Assembly 28
Seat Assembly 30
Seat Assembly No. 140-8303 32
Clutch Assembly 34
Attachments and Accessories 36

© 2022—The Toro® Company
8111 Lyndale Avenue South
Bloomington, MN 55420

Contact us at www.Toro.com.
Printed in the USA.
All Rights Reserved

Frame Assembly

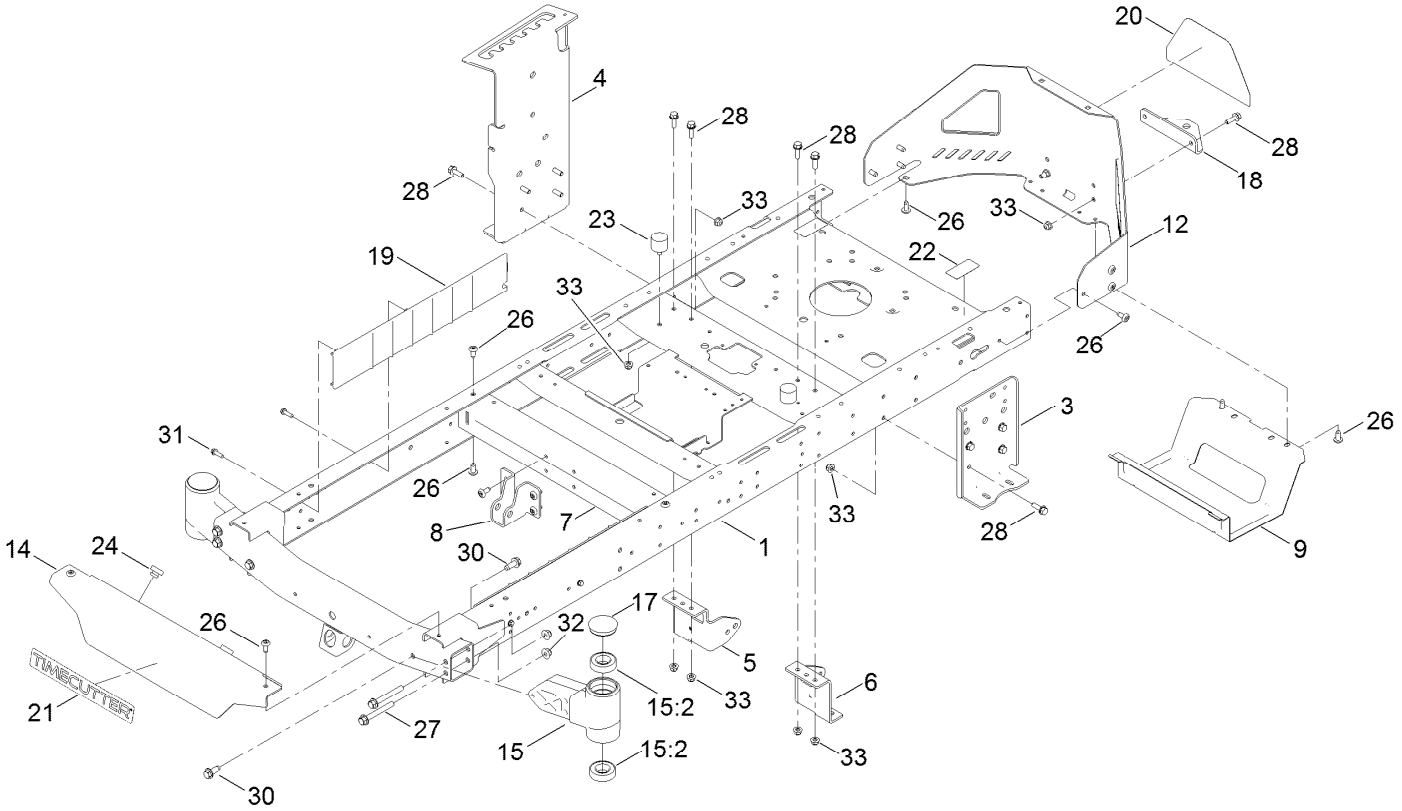

Frame Assembly (continued)

Ref.	Part Number	Qty.	Description
1	137-9820-01	1	Frame Assembly
3	138-7520-01	1	Plate-Mount, Hydro
4	139-2352-01	1	Plate-Mount Hydro, RH
5	137-7020-01	1	Mount-Hydro, Front (Right)
6	139-3211-01	1	Mount-Hydro, Front (Left)
7	138-2527-01	1	Brace-Cross, Lower
8	139-3260-01	1	Bracket-Mount Damper, Lower
9	138-0867-03	1	Guard-Muffler
12	138-9820-03	1	Guard-Engine
14	138-7596-01	1	Footrest
15	140-2098	2	Axle Stub ASM
15:2	109-3678	2	Bearing-Ball
17	138-7200	2	Cap-Grease
18	117-1232-03	1	Bracket-Hitch
19	138-7516	2	Guard-Rail
20	139-5890	1	Decal-Timecutter
21	139-2387	1	Decal-Timecutter
22	121-2989	2	Decal-Bypass
23	137-4803	2	Bumper-Rubber
24	140-3460	2	Bumper-Rubber
26	138-9753	20	Screw
27	139-2429	4	Screw-HHF
28	3234-29	14	Screw-HHF
30	139-2428	4	Screw-HWH
31	46-8091	4	Screw-HWH
32	139-2430	4	Nut-HF, NI
33	104-8300	16	Nut-HF, NI

Deck Lift Assembly

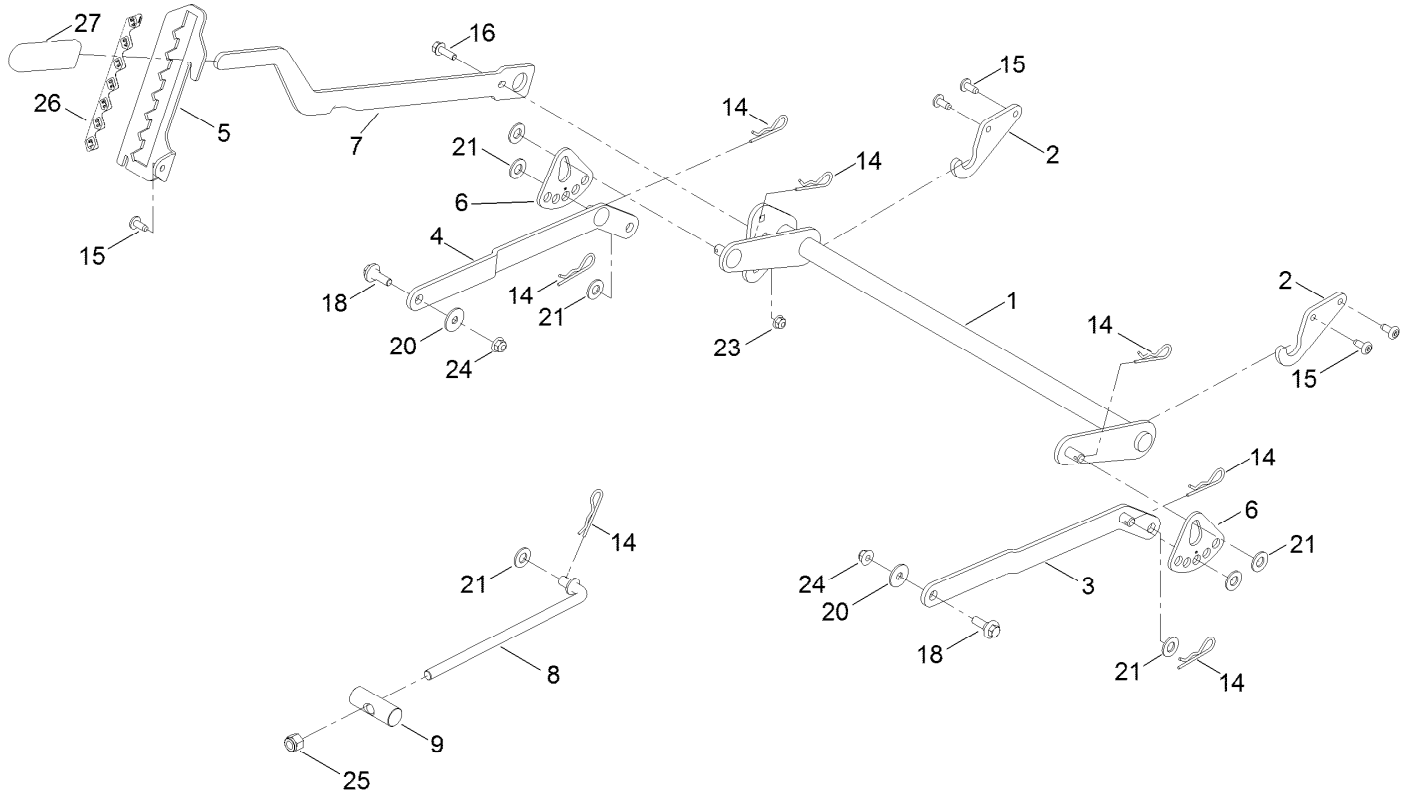

Deck Lift Assembly (continued)

Ref.	Part Number	Qty.	Description
1	137-7093-03	1	Deck Lift ASM
2	138-6021	2	Bracket-Pivot, Decklift
3	137-9844	1	LH Arm ASM
4	137-9846	1	RH Arm ASM
5	139-2350-01	1	Bracket-HOC
6	138-2564	2	Plate-Adjustment, HOC
7	137-7087-03	1	Lever-Lift
8	138-6050	1	Rod-Mount, Deck
9	119-8810	1	Pin-Pivot
14	1-806005	7	Pin-Cotter

Ref.	Part Number	Qty.	Description
15	138-9753	5	Screw
16	3234-29	1	Screw-HHF
18	137-9847	2	Screw-Shoulder
20	93-8806	2	Washer-Hardened
21	3256-26	7	Washer-Flat
23	104-8300	1	Nut-HF, NI
24	104-8301	2	Nut-HF, NI
25	3296-19	1	Nut-Hex
26	139-2392	1	Decal-HOC
27	1-633268	1	Grip-Lever

Tire and Caster Assembly

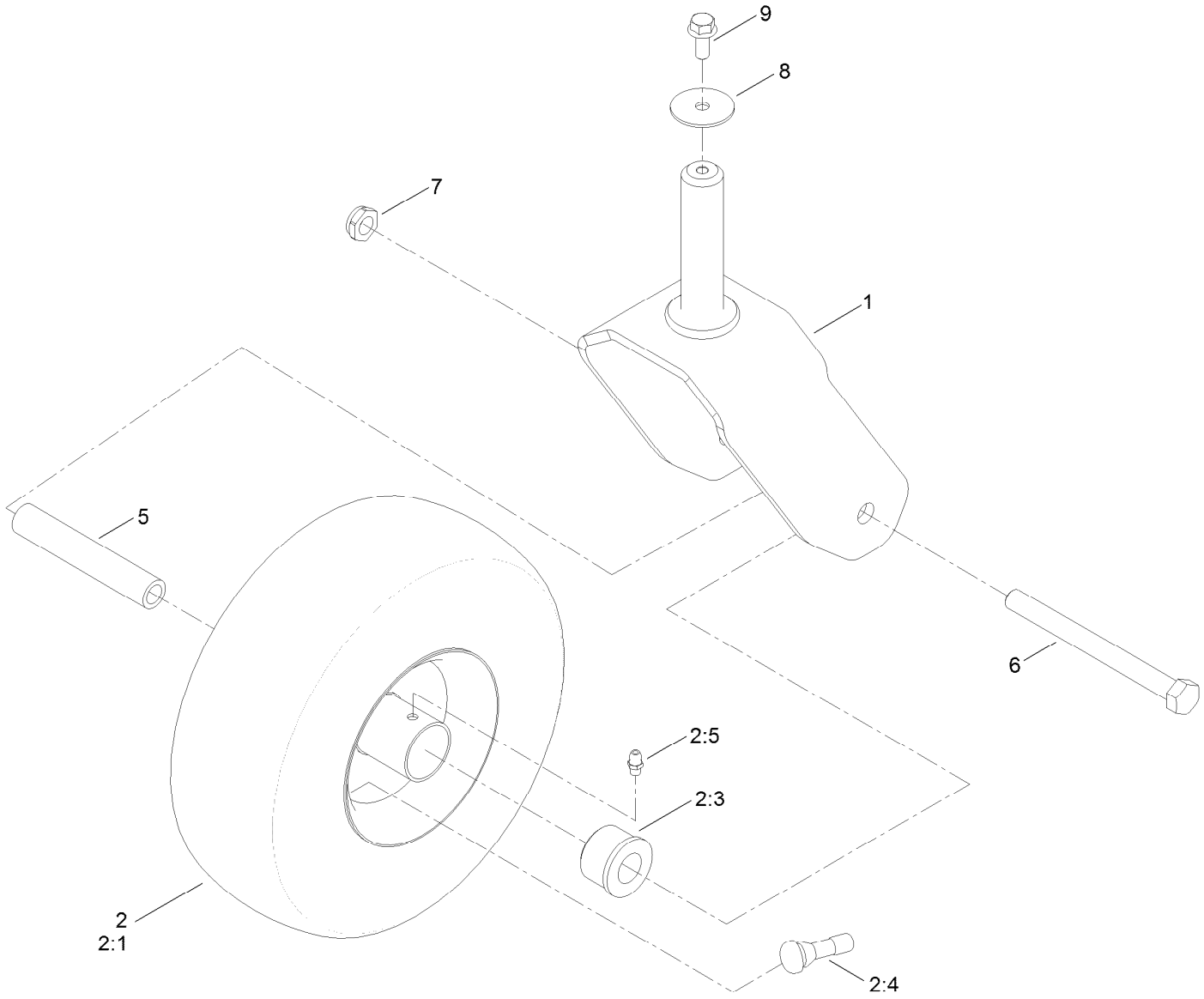

Tire and Caster Assembly (continued)

Ref.	Part Number	Qty.	Description
1	139-3274-01	2	Fork ASM
2	139-5842	2	Tire ASM
2:1	140-2736	1	Tire
2:3	114-1640	2	Bushing-Flange
2:4	232-27	1	Stem-Valve
2:5	302-5	1	Fitting-Grease

Ref.	Part Number	Qty.	Description
2:99	105-0844	1	Tube-Inner ● ■
5	138-7240	2	Bushing-Spanner
6	325-22	2	Screw-HH
7	3296-45	2	Nut-Hex
8	3256-68	2	Washer-Flat
9	3234-47	2	Screw-HHF

● Not illustrated

■ Optional Equipment

Traction Drive Assembly

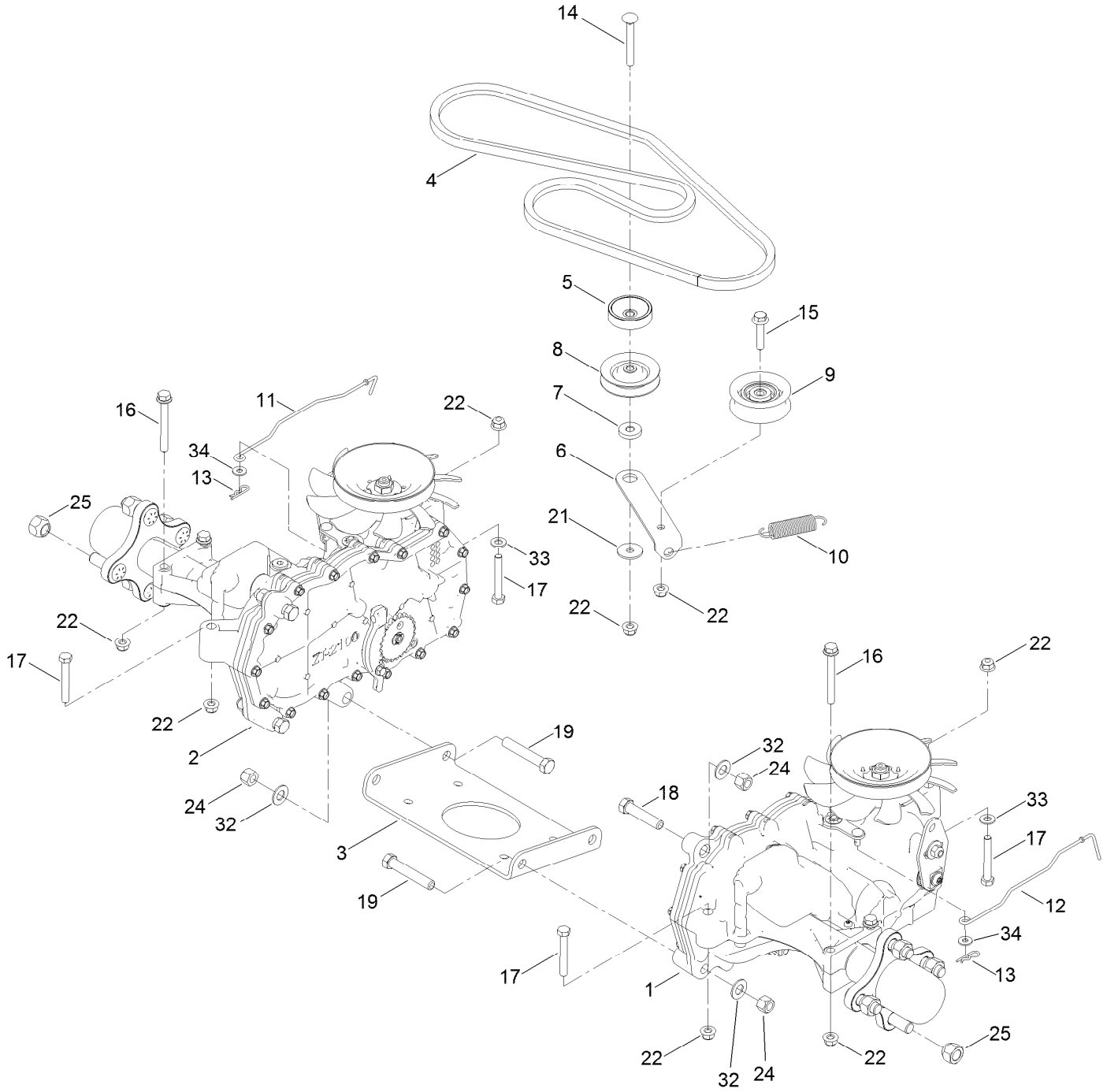

Traction Drive Assembly (continued)

Ref.	Part Number	Qty.	Description
1	139-7450	1	LH Hydro Transaxle ASM
2	139-7451	1	RH Hydro Transaxle ASM
3	138-2571-03	1	Crossplate-Hydro
4	139-2399	1	V-Belt
5	138-9809	1	Spacer
6	138-7276	1	Arm-Idler
7	138-7277	1	Spacer-Arm, Idler
8	68-0030	1	Idler
9	138-7597	1	Pulley-Idler, Flat
10	137-7040	1	Spring-Return, Pedal
11	138-7245	1	Rod-Bypass, RH
12	138-7243	1	Rod-Bypass, LH
13	3290-307	2	Pin-Cotter

Ref.	Part Number	Qty.	Description
14	3230-8	1	Screw-CARR
15	115-1794	1	Screw-HHF
16	138-7590	4	Screw-HHF
17	322-11	4	Screw-HH
18	324-8	2	Screw-HH
19	324-10	4	Screw-HH
21	5-4460	1	Washer-Pivot
22	104-8300	10	Nut-HF, NI
24	3296-48	6	Nut-Hex
25	242-50	8	Nut-Lug
32	3256-25	6	Washer-Flat
33	3256-23	2	Washer-Plain
34	119-8952	2	Washer

LH Hydro Transmission Assembly No. 139-7450

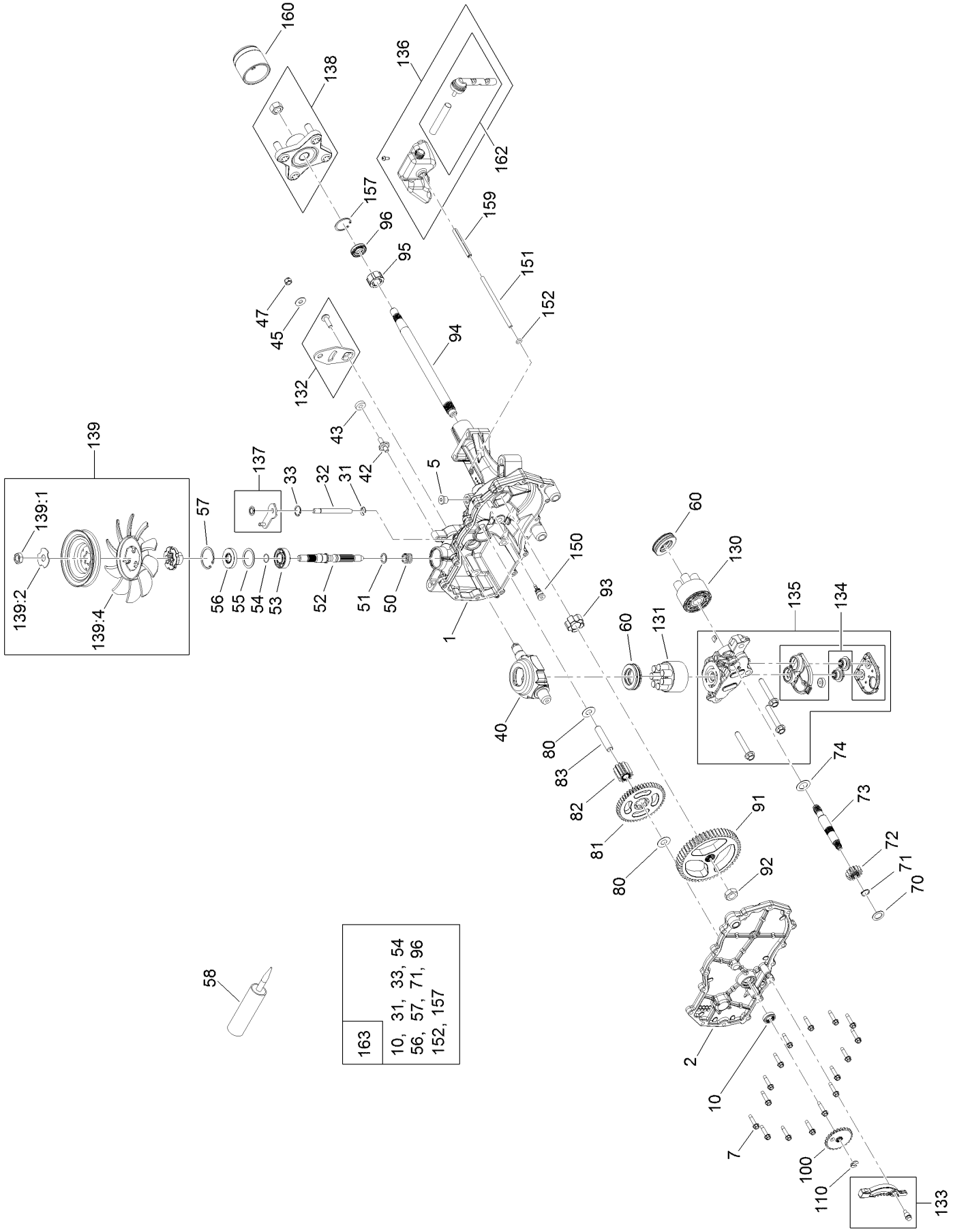

LH Hydro Transmission Assembly No. 139-7450 (continued)

Ref.	Part Number	Qty.	Description
1	120-5532	1	Main Housing ASM
2	120-5534	1	Housing Side Kit
5	104-2189	1	Plug-Thread, Straight
7	117-5359	16	Screw-HHF
10	104-2147	1	Sealant ●
31	106-8677	1	Ring-Retaining, External
32	106-8678	1	Rod-Bypass
33	106-8679	1	Ring-Retaining, Internal
40	104-5304	1	Swashplate-Trunnion
42	104-2116	1	Stud
43	112-9853	1	Puck-Friction
50	133-1793	1	Spring-Block
51	120-5538	1	Washer
52	104-5306	1	Shaft-Input
53	104-5311	1	Bearing-Ball
54	104-5307	1	Ring-Retaining
55	104-5308	1	Spacer
56	104-5310	1	Seal-Lip
57	104-5309	1	Ring-Retaining
58	104-2147	1	Sealant
60	94-6922	2	Bearing-Thrust
70	104-5339	1	Washer-Flat
71	104-5340	1	Ring-Retaining
72	104-5316	1	Gear-Pinnion, 13T
73	106-8683	1	Shaft-Motor
74	104-5360	1	Washer
80	119-5541	1	Washer
81	104-5317	1	Gear-10T/48T
82	104-5318	1	Gear-Jackshaft, 10T
83	104-5329	1	Pin-Jackshaft
91	120-5539	1	Gear-Bull
92	104-2142	1	Nut-HJ
93	115-8314	1	Bushing-Inboard
94	120-5540	1	Shaft-Axle
95	120-5541	1	Bearing-Sleeve
100	106-8694	1	Disc-Brake, Cog
110	106-8677	1	Ring-Retaining, External
130	103-2666	1	Cylinder Block Kit
131	110-8561	1	Pump Block ASM
132	117-5362	1	Control Arm Kit
133	106-8688	1	Brake Arm Kit
134	112-9861	1	Center Section Filter Kit
135	114-1634	1	Filter Kit
136	121-5730	1	RH Expansion Tank Kit
137	120-5549	1	Bypass Kit
138	121-5731	1	Hub Kit
139	135-7349	1	Fan And Pulley Kit
150	104-5349	1	Fitting-SAE
151	115-8302	1	Hose
152	104-5361	1	O-Ring
159	121-5728	1	Case-Tube
160	125-0041	1	Cap-Axle
162	139-3278	1	Breather ASM Kit
163	120-7103	1	Seal And Ring Kit

● Not illustrated

RH Hydro Transmission Assembly No. 139-7451

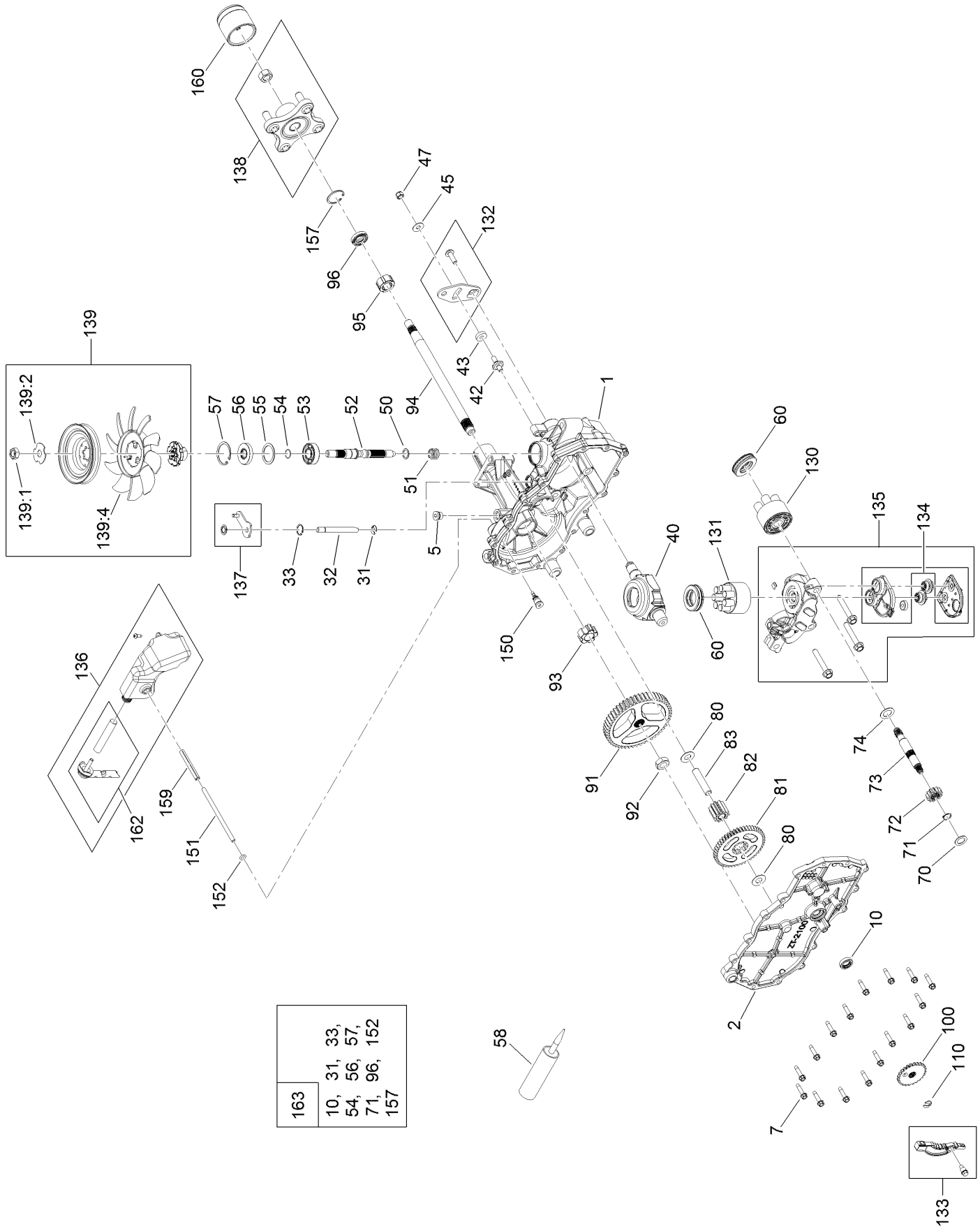

RH Hydro Transmission Assembly No. 139-7451 (continued)

Ref.	Part Number	Qty.	Description
1	120-5531	1	Main Housing ASM
2	120-5533	1	Housing Side Kit
5	104-2189	1	Plug-Thread, Straight
7	117-5359	16	Screw-HHF
10	104-2147	1	Sealant ●
31	106-8677	2	Ring-Retaining, External
32	106-8678	1	Rod-Bypass
33	106-8679	1	Ring-Retaining, Internal
40	104-5304	1	Swashplate-Trunnion
42	104-2116	1	Stud
43	112-9853	1	Puck-Friction
51	133-1793	1	Spring-Block
51	120-5538	1	Washer
52	104-5306	1	Shaft-Input
53	104-5311	1	Bearing-Ball
54	104-5307	1	Ring-Retaining
55	104-5308	1	Spacer
56	104-5310	1	Seal-Lip
57	104-5309	1	Ring-Retaining
58	104-2147	1	Sealant
60	94-6922	2	Bearing-Thrust
70	104-5339	1	Washer-Flat
71	104-5340	1	Ring-Retaining
72	104-5316	1	Gear-Pinnion, 13T
73	106-8683	1	Shaft-Motor
74	104-5360	1	Washer
80	119-5541	1	Washer
81	104-5317	1	Gear-10T/48T
82	104-5318	1	Gear-Jackshaft, 10T
83	104-5329	1	Pin-Jackshaft
91	120-5539	1	Gear-Bull
92	104-2142	1	Nut-HJ
93	115-8314	1	Bushing-Inboard
94	120-5540	1	Shaft-Axle
95	120-5541	1	Bearing-Sleeve
100	106-8694	1	Disc-Brake, Cog
110	106-8677	1	Ring-Retaining, External
130	103-2666	1	Cylinder Block Kit
131	110-8561	1	Pump Block ASM
132	117-5362	1	Control Arm Kit
133	106-8688	1	Brake Arm Kit
134	112-9862	1	Center Section Filter Kit
135	114-1634	1	Filter Kit
136	121-5735	1	LH Expansion Tank Kit
137	107-2489	1	Bypass Arm Kit
138	121-5731	1	Hub Kit
139	135-7349	1	Fan And Pulley Kit
150	104-5349	1	Fitting-SAE
151	115-8302	1	Hose
152	104-5361	1	O-Ring
159	121-5728	1	Case-Tube
160	125-0041	1	Cap-Axle
162	139-3278	1	Breather ASM Kit
163	120-7103	1	Seal And Ring Kit

● Not illustrated

Brake Assembly

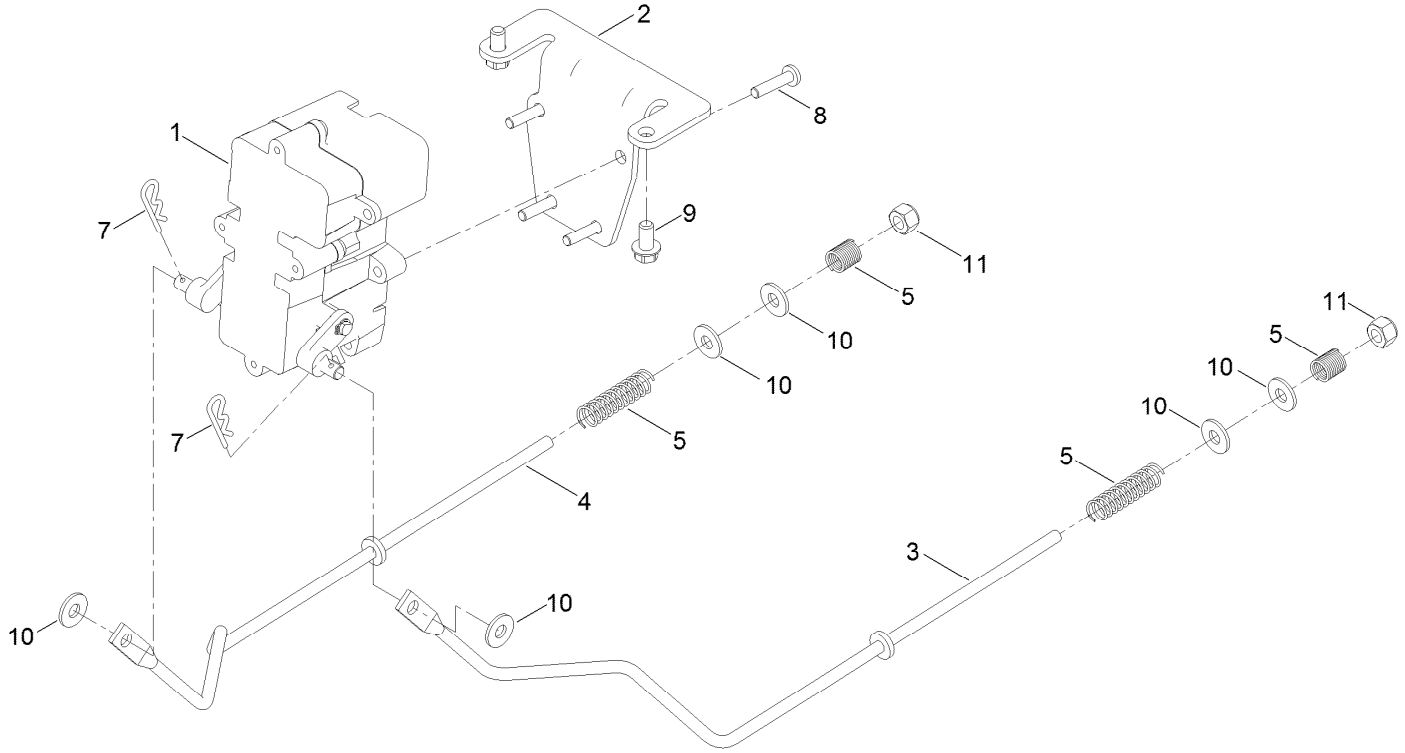

Brake Assembly (continued)

Ref.	Part Number	Qty.	Description
1	138-2514	1	Brake Box ASM
2	133-9284-03	1	Bracket-Mount, Brake
3	138-2591	1	Rod-Brake, LH
4	138-2592	1	Rod-Brake, RH
5	117-1169	4	Spring-Compression
7	3290-307	2	Pin-Cotter
8	32144-36	4	Screw-PPH
9	32144-4	2	Screw-HWH
10	119-8952	6	Washer
11	3296-42	2	Nut-Lock, NI

Rear Tire Assembly

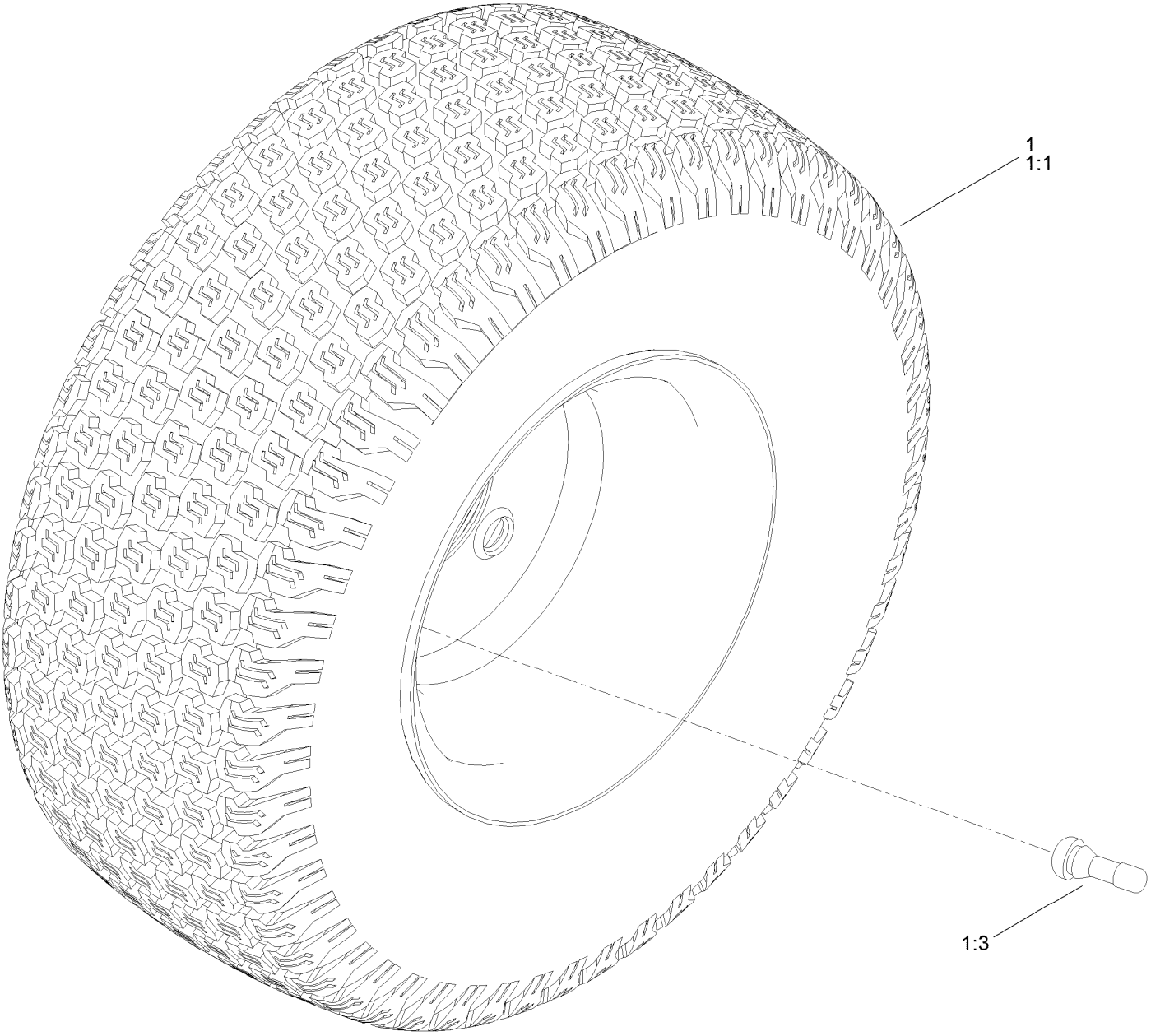

Rear Tire Assembly (continued)

Ref.	Part Number	Qty.	Description
1	139-5846	2	Tire ASM
1:1	140-2729	1	Tire
1:3	232-27	1	Stem-Valve
1:99	107-2491	1	Tube-Tire ●

● Not illustrated

Motion Control Assembly

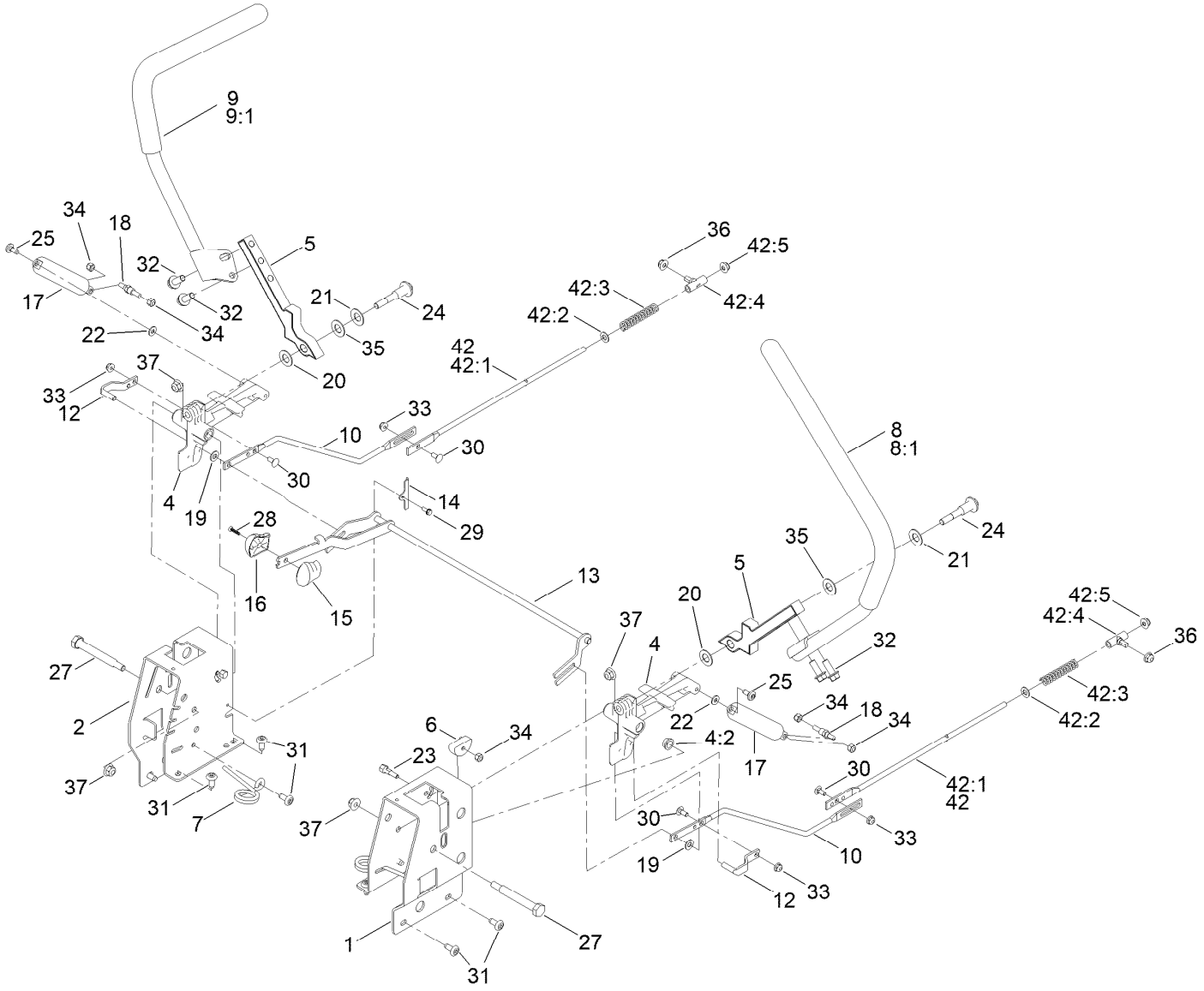

Motion Control Assembly (continued)

Ref.	Part Number	Qty.	Description
1	138-7598-03	1	Plate-Control Box, LH
2	138-7599-03	1	Plate-Control Box, RH
4	119-3470	2	Actuator Arm ASM
4:2	256-156	2	Bushing-Flange
5	133-9299-05	2	Arm-Control
6	139-5803	2	Eccentric
7	138-7539	2	Spring-Torsion
8	133-7055	1	Handle-Control, LH
8:1	121-0726	1	Grip
9	133-7057	1	Handle-Control, RH
9:1	121-0726	1	Grip
10	138-2580	2	Rod-Hydro, Front
12	121-1753	2	Pin-Rod, Hydro
13	138-9750	1	Speed Control ASM
14	138-7541	2	Plate-Retainer
15	132-9368	1	Knob-RH
16	132-9369	1	Knob-LH
17	132-6853	2	Damper-Non Cavitating
18	138-7215	2	Stud-Damper
19	93-6079	2	Spacer-Nylon
20	120-2273	2	Washer-Nylon
21	119-8925	2	Washer-Belleville

Ref.	Part Number	Qty.	Description
22	119-8952	2	Washer
23	139-5811	2	Bolt-Pivot, Eccentric
24	117-1198	2	Bolt-Pivot
25	120-7950	2	Screw-Torx
27	115-5099	2	Bolt-Pivot
28	94-4496	1	Screw-PPH
29	32144-1	2	Screw-Taptite
30	3229-11	4	Screw-CARR
31	138-9753	10	Screw
32	3234-42	4	Screw-HHF
33	104-7201	4	Nut-HF, NI
34	3296-42	6	Nut-Lock, NI
35	117-1240	2	Washer
36	119-4041	2	Nut-HF
37	104-8301	4	Nut-HF, NI
42		2	Rod Hydro ASM ●
42:1	144-1818	1	Rod-Hydro, Rear
42:2	120-9683	1	Washer-Plain
42:3	138-7252	1	Spring-Compression
42:4	138-7218	1	Mount-Rod, Hydro
42:5	119-4041	1	Nut-HF

● Not serviced separately

Engine and Muffler Assembly

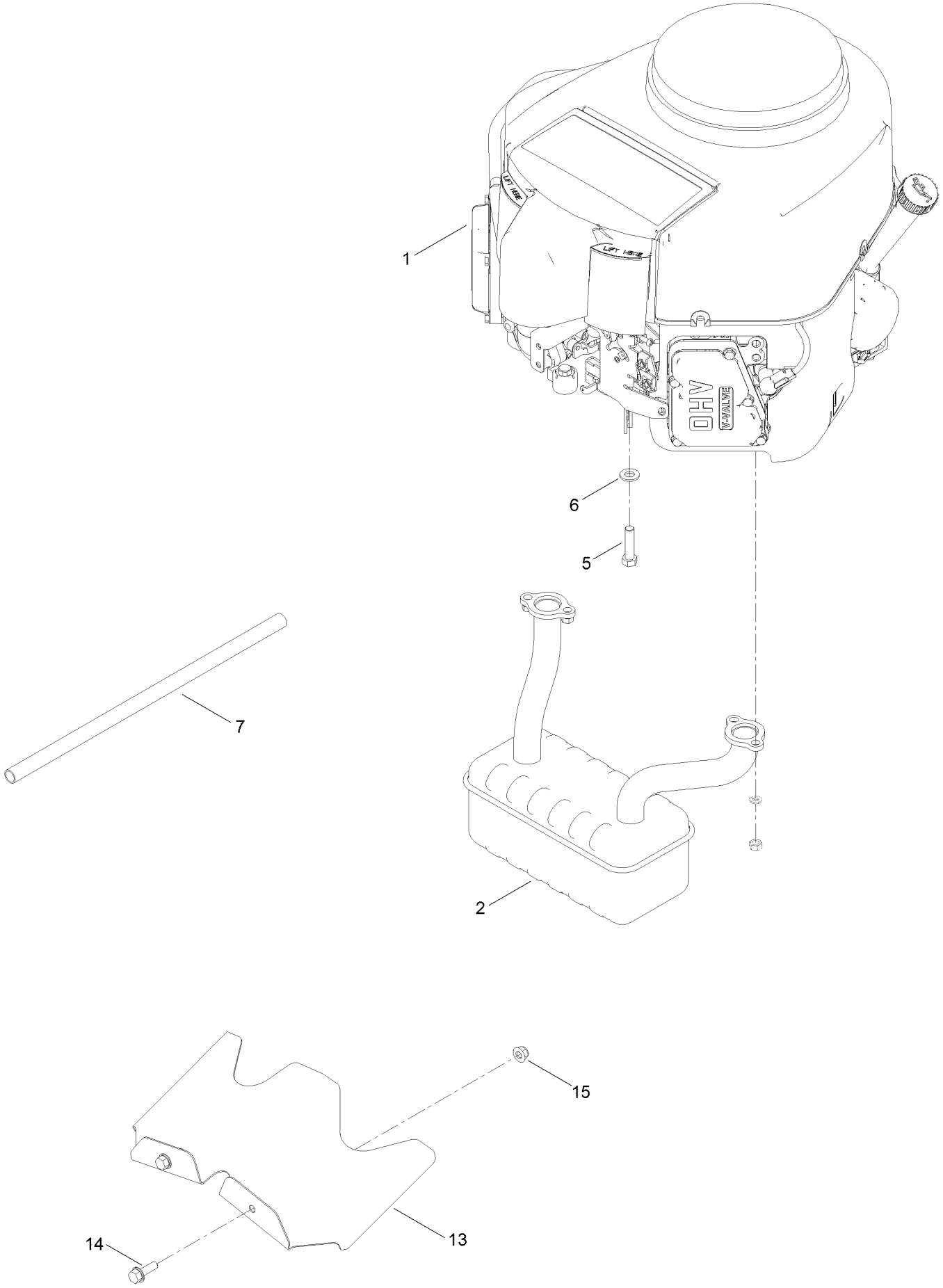

Engine and Muffler Assembly (continued)

Ref.	Part Number	Qty.	Description
1		1	Engine-Kawasaki, Fr691V-As26-R ●■
2	139-5867	1	Muffler
5	323-50	4	Bolt-HH
6	3256-24	3	Washer-Flat
7	106-7022	1	Tube-Drain, Oil
13	140-5126-03	1	Shield-Heat
14	3234-29	2	Screw-HHF
15	104-8300	2	Nut-HF, NI

● Not serviced separately

■ Obtain parts from www.kawpower.com

Fuel Pod and Body Styling Assembly

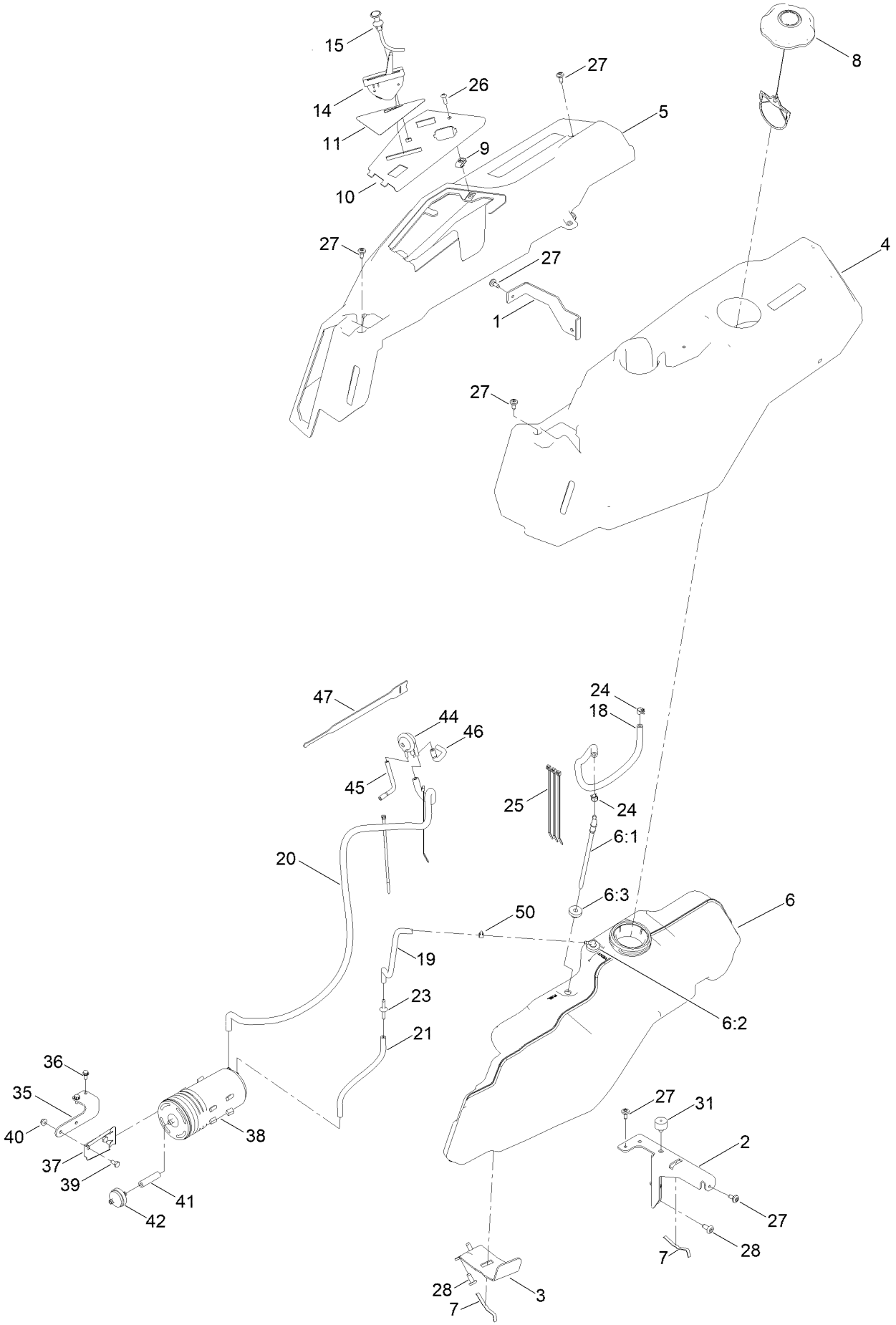

Fuel Pod and Body Styling Assembly (continued)

Ref.	Part Number	Qty.	Description
1	138-9810-03	1	Bracket-Pod
2	138-6071-03	1	Support-Pod, LH
3	139-3271-03	1	Support-Tank, Fuel
4	138-6074	1	Pod-LH
5	139-2404	1	Pod-RH, Myride
6	144-5304	1	Tank-Fuel ASM
6:1	139-1091	1	Connector-Elbow, 90 DEG
6:2	144-5302	1	Fitting-Elbow 90
6:3	46-6560	2	Bushing
7	609830	2	Spring
8	137-4119	1	Cap-Fuel, Ratcheting
9	107069	1	Clip
10	139-2380-03	1	Panel - Control
11	139-2391	1	Decal-Panel, Control
14	139-2403	1	Cable-Throttle
15	139-2402	1	Cable-Choke
18	109-0299	1	Hose-Fuel
19	136-6345	1	Hose-Fuel
20	110-7502	1	Hose-Fuel
21	138-0868	1	Hose-Fuel

Ref.	Part Number	Qty.	Description
23	144-1983	1	Adapter Orifice
24	2412-98	2	Clamp-Hose
25	614249	5	Tie-Cable
26	3258-166	1	Screw-PRH
27	120-7950	6	Screw-Torx
28	138-9753	5	Screw
31	120-7893	1	Bumper-Grommet
35	139-5853-03	1	Bracket-Canister, Carbon
36	32144-4	2	Screw-HWH
37	114-0292	1	Bracket-Canister, Carbon
38	117-1221	1	Canister-Carbon, 800Cc
39	321-2	2	Screw-HH
40	104-7201	2	Nut-HF, NI
41	99-9415	1	Hose-Fuel
42	115-7854	1	Filter-Fuel, Inline
44	116-2232	1	Valve-Control, Vacuum
45	119-8501	1	Hose-Vent, Formed
46	119-8502	1	Hose-Vent, Formed
47	116-2469	1	Strap-Velcro, Cable Tie
50	2412-80	1	Clamp-Hose

Electrical Assembly

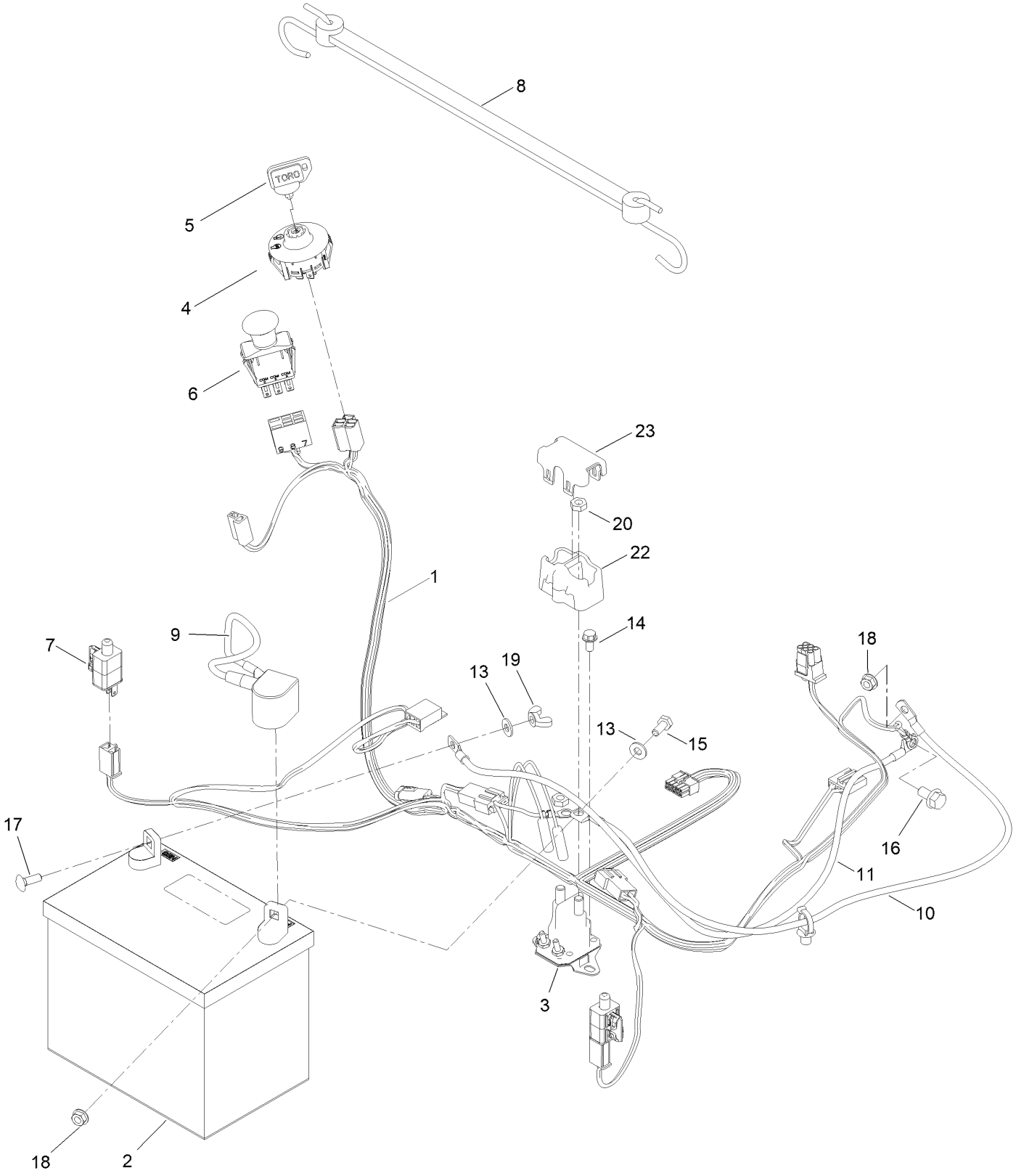

Electrical Assembly (continued)

Ref.	Part Number	Qty.	Description
1	138-2521	1	Harness-Wire
1:1	109355	1	Fuse-Blade, 15 Amp ●
1:2	109102	1	Fuse-Blade, 25 Amp ●
2	105-1692	1	Battery, 230CCA W/O Electrolyte
3	117-1197	1	Solenoid
4	137-4100	1	Switch-Ignition
5	63-8360	1	Key-Ignition
6	103-5221	1	Switch-PTO
7	110-6765	2	Switch
8	139-2381	1	Strap-Rubber
9	140-2713	1	Cable-Battery, Pos
10	139-2431	1	Cable-Battery, Red (8 Gauge)
11	110-6793	1	Cable-Battery, Black
13	3256-22	2	Washer-Flat
14	32144-4	2	Screw-HWH
15	321-3	1	Screw-HH
16	33104-016	1	Screw-HHF
17	3229-1	1	Screw-CARR
18	32128-33	2	Nut-HF
19	32103-22	1	Nut-Wing
20	3220-2	2	Nut-Jam
22	140-2080	1	Cover-Solenoid
23	140-2081	1	Cap-Solenoid

● Not illustrated

42in Deck and Decal Assembly

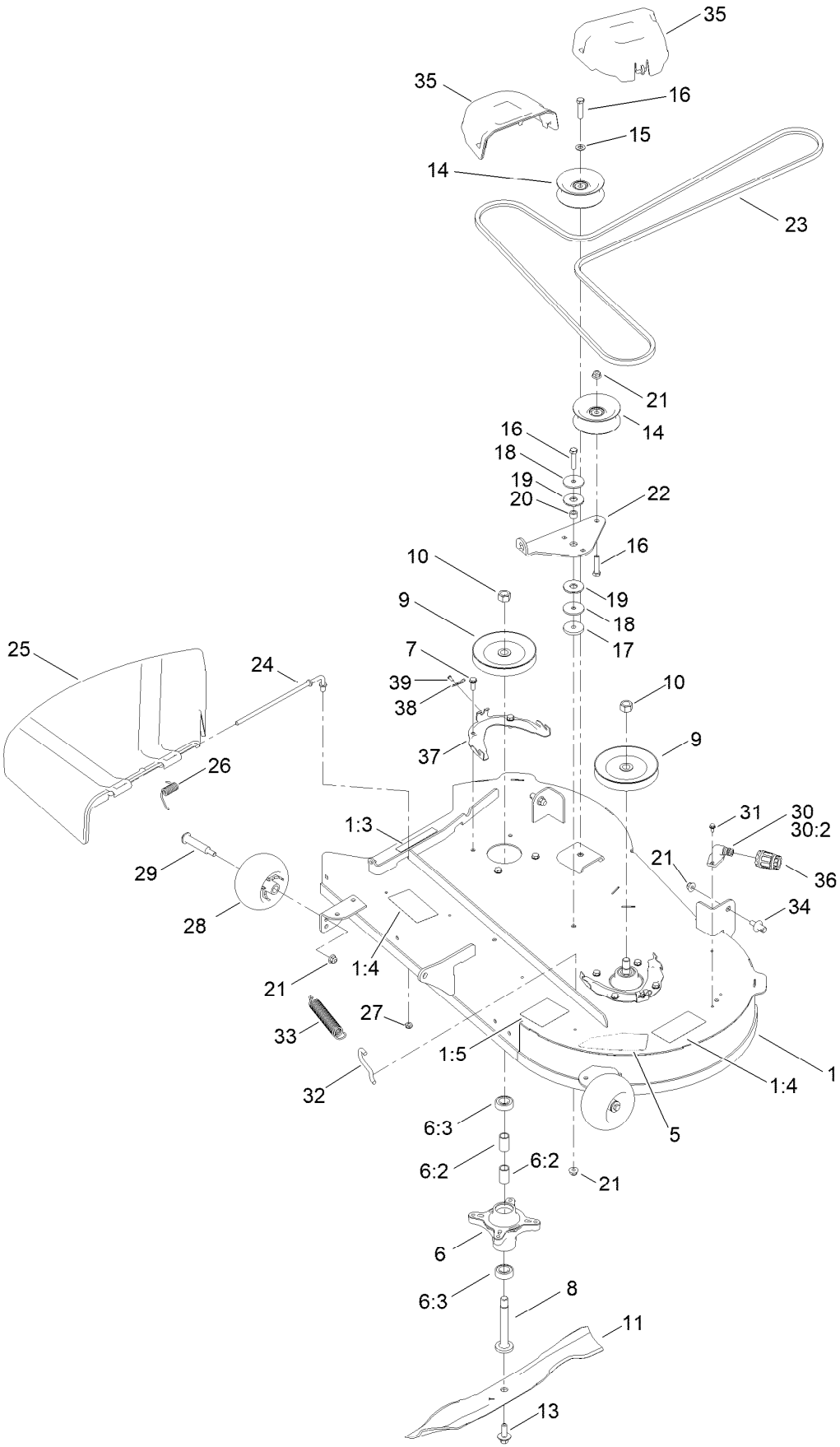

42in Deck and Decal Assembly (continued)

Ref.	Part Number	Qty.	Description
1	138-9769	1	42In Deck And Decal ASM
1:3	130-0731	1	Decal-Danger
1:4	132-0872	2	Decal-Danger, Deck
1:5	105-7015	1	Decal-Routing, Belt
5	140-2123	1	Decal-Deck
6	139-3214	2	Spindle ASM
6:2	120-7935	2	Spacer
6:3	138-9770	2	Bearing-Ball
7	32144-41	8	Screw-Taptite
8	117-7268	2	Shaft-Spindle
9	139-2433	2	Pulley
10	3219-6	2	Nut-Hex
11	137-1999-03	2	Blade
13	145-0411	2	Bolt-Blade, Sems
14	132-9420	2	Pulley-Idler, Flat
15	3256-24	1	Washer-Flat
16	323-9	3	Screw-HH
17	110-9981	1	Washer-Plain
18	63-7400	2	Washer-Rebound
19	114-0463	2	Washer-Friction, Composite
20	115-4986	1	Spacer
21	104-8301	6	Nut-HF, NI
22	138-7262	1	Arm-Idler
23	147-2924	1	V-Belt
24	137-2019	1	Rod-Pivot
25	138-7502	1	Deflector-Discharge
26	138-7268	1	Spring-Torsion
27	3296-59	1	Nut-Lock, NI
28	1-603299	2	Roller-Scalp, Anti
29	112-3977	2	Bolt-Shoulder
30	133-9289	1	Fitting-Washout
30:2	133-9290	1	O-Ring
31	32144-4	2	Screw-HWH
32	138-7267	1	Hook-Spring, Return
33	138-7265	1	Spring Extension
34	139-5871	2	Pin-Deck
35	144-1905	2	Cover-Belt
36	95-3270	1	Connector-Hose
37	139-3272-03	2	Bracket-Cover, Belt
38	144-1944	2	Pin-Hair
39	94-6961	2	Screw

Seat Assembly

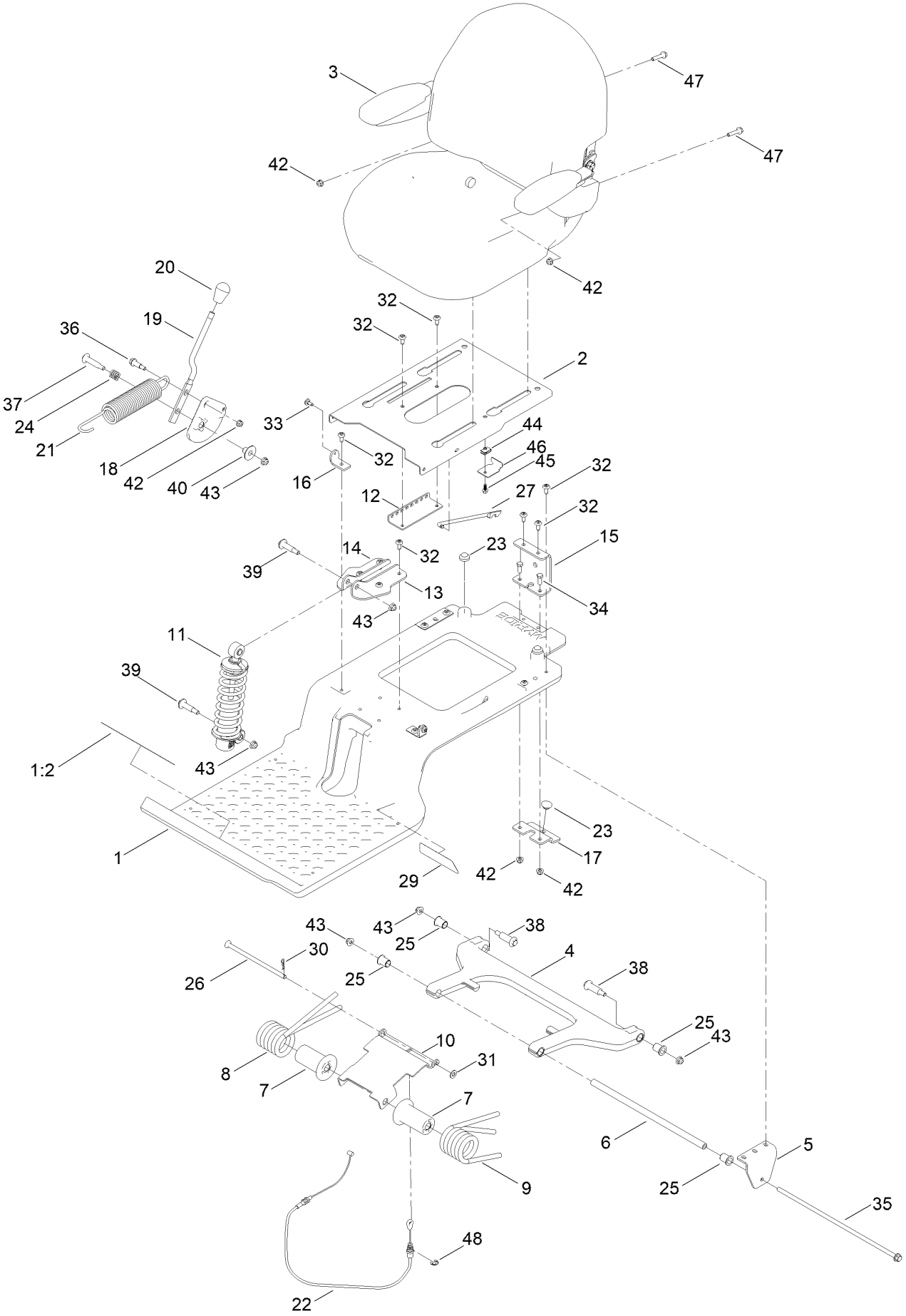

Seat Assembly (continued)

Ref.	Part Number	Qty.	Description
1	140-5046	1	Subframe ASM
1:2	132-0869	1	Decal-Danger
2	138-7540-03	1	Pan-Seat
3	140-8303	1	Seat ASM
4	138-2563	1	Arm, Swing
5	138-7517	2	Bracket-Mount, Swing Arm
6	138-7549	1	Tube-Spacer
7	138-9776	2	Retainer-Spring
8	137-7018	1	Spring-Torsion, RH
9	137-1983	1	Spring-Torsion, LH
10	138-7566-03	1	Plate-Adjuster
11	139-2427	1	Shock/Spring ASM
12	131-4008-03	1	Bracket-Latch, Seat
13	133-9318-03	1	Bracket-Shock Mount, Upper (LH)
14	133-9319-03	1	Bracket-Shock Mount, Upper (RH)
15	138-9788	1	Bracket-Cable
16	138-7522	2	Bracket-Seat
17	139-2361-03	1	Bracket Lower
18	138-9814	1	Pulley - Cam
19	138-9822	1	Lever - Adjustment
20	140-5176	1	Knob-Mr
21	138-9848	1	Spring-Extension
22	138-9812	1	Cable-Adjustment, Myride
23	135-0505	3	Bumper-Seat
24	139-5858	1	Spring-Compression
25	138-2573	4	Bushing-Flange
26	138-9813	1	Rod-Adjustment
27	138-2596	1	Rod-Prop, Seat
29	140-0357	1	Decal-Myride
30	1-806003	1	Pin-Cotter
31	3256-24	1	Washer-Flat
32	138-9753	14	Screw
33	120-7950	2	Screw-Torx
34	322-4	2	Screw-HH
35	138-7548	1	Screw-HHF
36	140-3759	1	Bolt-Shoulder,HHF
37	92-1057	1	Bolt-Shoulder
38	138-2547	2	Bolt-Shoulder
39	136-7198	2	Bolt-Shoulder
40	139-5800	1	Bushing - Flange
42	104-8300	5	Nut-HF, NI
43	119-4042	6	Nut-HF, NI
44	107069	1	Clip
45	99-6810	1	Screw-HHF
46	138-7214	1	Bracket-Stop, Seat
47	140-5024	2	Screw-HHF
48	32120-47	1	Ring-Retaining, External

Seat Assembly No. 140-8303

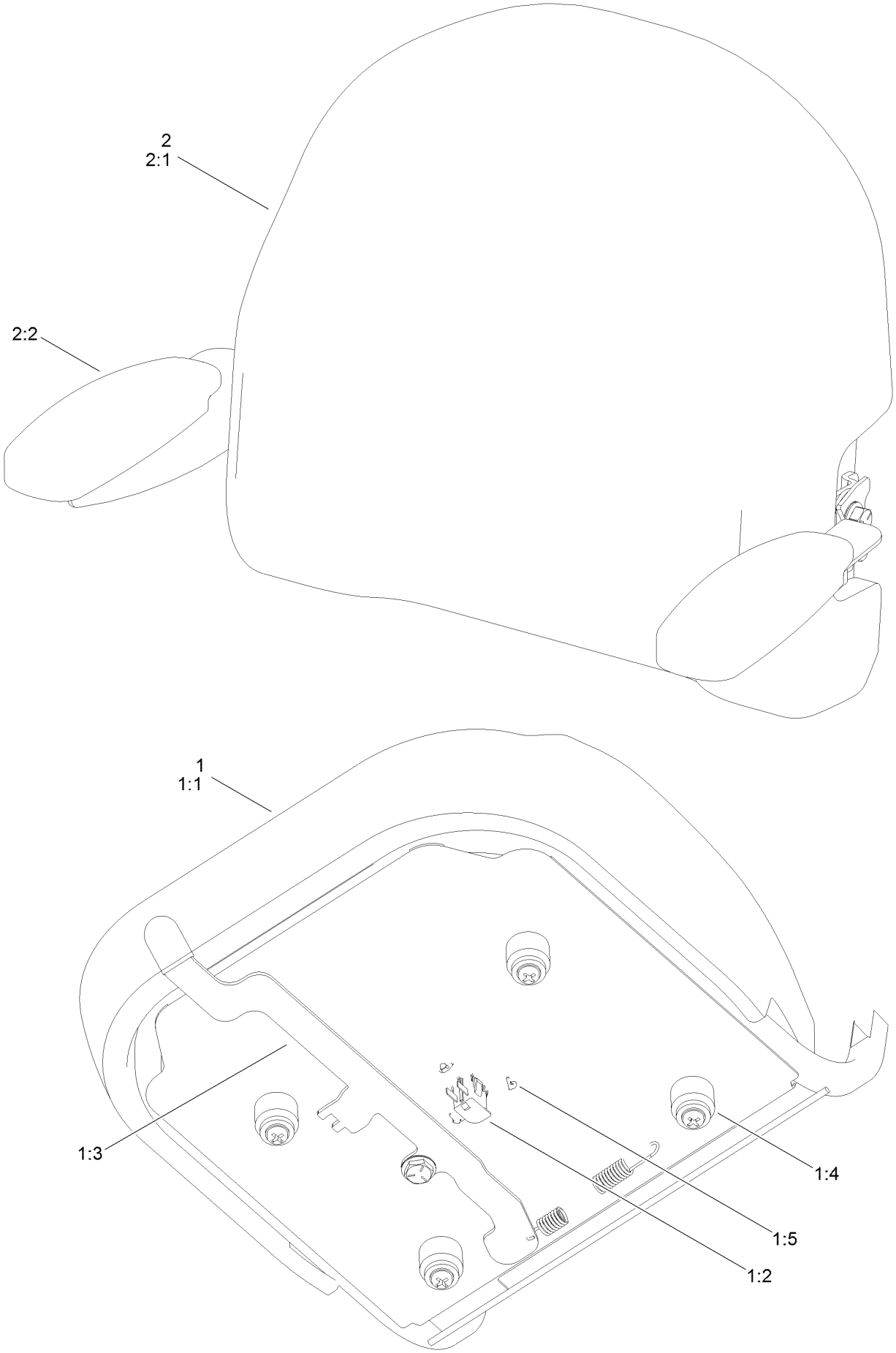

Seat Assembly No. 140-8303 (continued)

Ref.	Part Number	Qty.	Description
1	140-8323	1	Seat ASM - Bottom
1:1	140-5042	1	Cover-Seat Base
1:2	82-2190	1	Switch-Bail
1:3	131-4153	1	Track ASM
1:4	131-4154	1	Bushing ASM
1:5	140-3468	1	Cap-Switch, Actuator
2	140-8324	1	Seat ASM -Back
2:1	140-5041	1	Cover-Seat Back
2:2	139-5823	1	Arm Rest Kit

Clutch Assembly

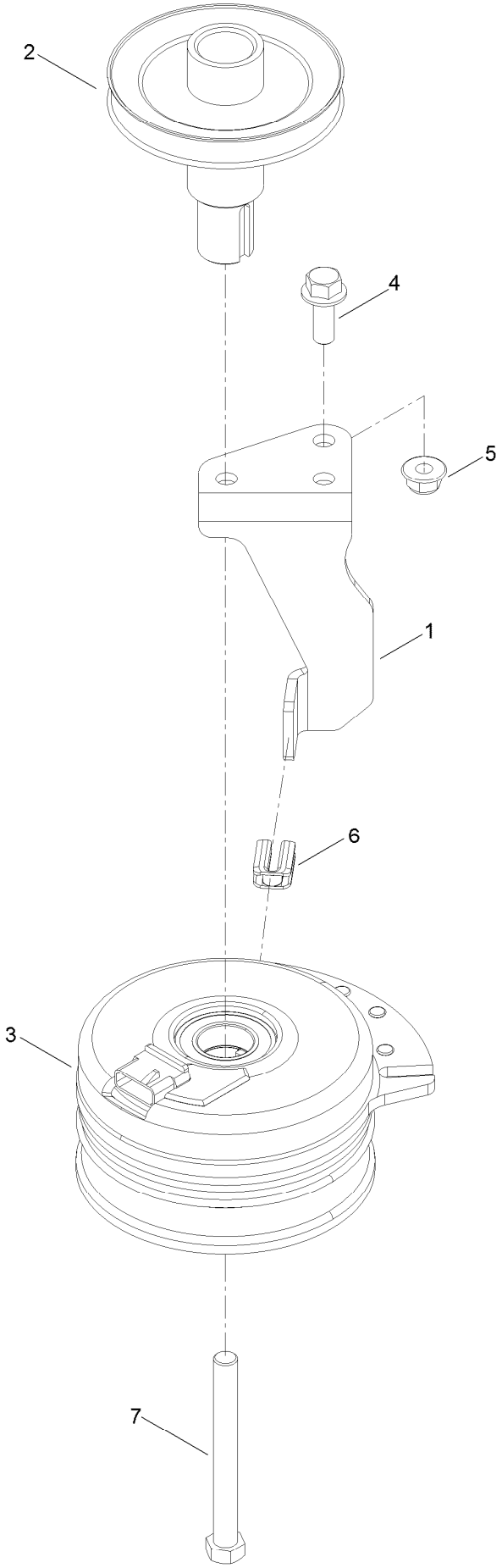

Clutch Assembly (continued)

Ref.	Part Number	Qty.	Description
1	138-7275	1	Stop-Clutch (Narrow)
2	138-9792	1	Pulley-Engine
3	117-7468	1	Clutch-Electric
4	3234-42	1	Screw-HHF
5	104-8301	1	Nut-HF, NI
6	120-2217	1	Isolator-Clutch
7	3212-16	1	Screw-HH

Attachments and Accessories

For 75743 TimeCutter 4275C Riding Mower

Product Name	Model/Part
Twin Bagger, Timecutter 42 Inch Fab	79411
42 Inch Recycler Kit	139-3265
42 Inch Bagging Enhancement Kit	139-7478
42 Inch Striping Kit	140-5159
Hourmeter Kit	116-5461
Front Weight Kit	140-2050
Assist Bar Kit	140-2052
Heavy Duty Spring Kit	140-2051
ROPS Kit	79485
Slope Sensor Kit	79486
LED Light Kit	140-2056
Sunshade Kit	140-2054
Deck Footlift Assist Kit	140-2059
Floormat Kit	140-2061
Jack Mount Kit	140-2711
Replacement Blade Kit	137-1999-03P
Storage Cover	490-7516
Seat Cover w/Arm Rest	117-0097
4-Cycle Fuel, Snow And Lawn 32oz Can	131-3823
Fuel Stabilizer .05 oz	130-2393
Toro Premium Fuel Treatment 12 Oz Bottle	131-6572
10w30 4-Cycle Engine Oil (32oz Bottle)	38280
Toro 4-Cycle SAE 30 Oil (32oz Bottle)	38903
Mower Deck Drive Belt, TimeCutter SS Riding Mower with 42-inch Mowing Deck	79004
Caster Wheel Kit	145-0475
Jack Kit	127-6666

Notes:

Notes:

Notes:

TORO®

Count on it.