Form No. 3327–536

Reelmaster® 5500–D

2 and 4 Wheel Drive Traction Units

Model No. 03550—220000001 and Up

Model No. 03551—220000001 and Up

Operator’s Manual

English (EN)

FOREWORD

This operator's manual has instructions on safety, proper set−up and operation, adjustments and maintenance. Therefore, anyone involved with the product, including the operator, should read and understand this manual. Major sections are:

- Safety Instructions
- Specifications
- Set−up Instructions
- Before Operating
- Know Your Controls
- Operating Instructions
- Maintenance
- Schematics

This manual emphasizes safety, mechanical and general product information. **DANGER**, **WARNING** and **CAUTION** identify safety messages. Whenever the triangular safety alert symbol appears, understand the safety message that follows. For complete safety instructions, read pages 4−7. **IMPORTANT** highlights special mechanical information and **NOTE** emphasizes general product information worthy of special attention.

⚠ WARNING: ⚠

Diesel engine exhaust and some of its constituents are known to the State of California to cause cancer, birth defects, or other reproductive harm.

SERVICE AND REPAIR LITERATURE

The Reelmaster 5500−D Service Manual contains information for troubleshooting, testing and repair of the hydraulic system, brakes and cutting units for the Reelmaster 5500−D. To order this publication, contact your local authorized Toro Distributor.

OPTIONAL SPARK ARRESTER

In some places a spark arrester muffler must be used because of local, state or federal regulations. The spark arrester available from your local Toro Distributor is approved by the United States Department of Agriculture and the United States Forest Service. Order the following parts from your local Toro Distributor:

Spark Arrester Part No. 75-6880

When the mower is used or operated on any California forest, brush or grass covered land, a properly operating spark arrester must be attached to the muffler. The operator is violating state law, Section 442 Public Resources Code if a spark arrester is not used.

Whenever you have questions or need service, contact your local authorized Toro Distributor. In addition to having a complete line of accessories and professional turf care service technicians, the distributor has a complete line of genuine TORO replacement parts to keep your machine operating properly. Keep your TORO all TORO. Buy genuine TORO parts and accessories.

© 2001 by The Toro Company

All Rights Reserved

Printed in the USA

TABLE OF CONTENTS

Page

SAFETY INSTRUCTIONS 4
SAFETY INSTRUCTIONS & DECALS 6
SPECIFICATIONS 9
LOOSE PARTS CHART 10
SET-UP INSTRUCTIONS 11
Connect Battery 11
Mount Hood Latch 11
Replace Floor Panel Fastener 12
Check Tire Pressure 12
Install Cutting Units 12
Alternate Adjustments 13
Adjust Cutting Unit Stabilizer 14
Rear Ballast 14
BEFORE OPERATING 15
Check Engine Oil 15
Check Cooling System 15
Fill Fuel Tank 15
Check Transmission Fluid 16
Check Hydraulic Fluid 16
Check Rear Axle Lubricant (Models 03551) 16
Check Reel To Bedknife Contact 17
Check Torque Of Wheel Nuts 17
KNOW YOUR CONTROLS 18
OPERATING INSTRUCTIONS 20
Starting And Stopping 20
Bleeding Fuel System 20
Setting Reel Speed 20
Adjusting Rear Lift Arm Counterbalance 21
Towing Traction Unit 22
Diagnostic Light 22
Diagnostic ACE Display 22
Checking Interlock Switches 23
Hydraulic Valve Solenoid Functions 24
Operating Characteristics 24
LUBRICATION 25
Greasing Bearings And Bushings 25
SERVICE INTERVAL CHART 26
DAILY MAINTENANCE CHART & CHECKLIST . . 27

Page

AIR CLEANER MAINTENANCE 28
General Air Cleaner Maintenance 28
Servicing Precleaner Bowl 28
Servicing Air Cleaner Filter 28
ENGINE MAINTENANCE 29
Engine Oil And Filter 29
Fuel System 29
Replacing Pre Fuel Filter 29
Bleeding Air From Injectors 30
Engine Cooling System 30
Servicing Engine Belts 31
Adjusting Throttle 31
HYDRAULIC MAINTENANCE 32
Changing Hydraulic Fluid 32
Replacing Hydraulic Filter 32
Checking Hydraulic Lines And Hoses 32
Hydraulic System Test Ports 32
Adjusting Traction Drive for Neutral 33
Adjusting Cutting Unit Drop Rate 33
Checking and Adjusting Traction Linkage 34
HYDRAULIC SCHEMATIC 35
BRAKE MAINTENANCE 36
Adjusting Service Brakes 36
AXLE MAINTENANCE 36
Changing Transmission Fluid 36
Replacing Transmission Filter 36
Changing Rear Axle Lubricant (Models 03551) 37
Rear Wheel Toe-in 37
ELECTRICAL MAINTENANCE 38
Battery Care 38
Fuses 38
Adjust Parking Brake Switch 38
Optional Lighting 38
ELECTRICAL SCHEMATIC 39
CUTTING UNIT MAINTENANCE 40
Backlapping 40
MAINTENANCE SCHEDULE 42
PREPARATION FOR SEASONAL STORAGE 43
IDENTIFICATION & ORDERING 44
Model And Serial Number 44
WARRANTY . . . . . Back Cover

SAFETY INSTRUCTIONS

The REELMASTER 5500−D was tested and certified by TORO for compliance with the B71.4-1999 specifications of the American National Standards Institute. Although hazard control and accident prevention partially are dependent upon the design and configuration of the machine, these factors are also dependent upon the awareness, concern, and proper training of the personnel involved in the operation, transport, maintenance, and storage of the machine. Improper use or maintenance of the machine can result in injury or death. To reduce the potential for injury or death, comply with the following safety instructions.

BEFORE OPERATING

1. Read and understand the contents of this manual before starting and operating the machine. Become familiar with the controls and know how to stop the machine and engine quickly. A free replacement manual is available by sending the complete model and serial number to:

The Toro Company
8111 Lyndale Avenue South
Bloomington, Minnesota 55420−1196.

2. Never allow children to operate the machine. Do not allow adults to operate machine without proper instruction. Only trained operators who have read this manual should operate this machine.

3. Never operate the machine when under the influence of drugs or alcohol.

4. Keep all shields, safety devices and decals in place. If a shield, safety device or decal is defective, illegible or damaged, repair or replace it before operating the machine. Also tighten any loose nuts, bolts or screws to ensure machine is in safe operating condition.

5. Always wear substantial shoes. Do not operate machine while wearing sandals, tennis shoes, sneakers or when barefoot. Do not wear loose fitting clothing that could get caught in moving parts and possibly cause personal injury. Wearing safety glasses, safety shoes, long pants and a helmet is advisable and required by some local ordinances and insurance regulations.

6. Assure interlock switches are adjusted correctly so engine cannot be started unless traction pedal is in NEUTRAL and cutting units are DISENGAGED.

7. Remove all debris or other objects that might be picked up and thrown by the reels or fast moving components from other attached implements. Keep all bystanders away from operating area.

8. Since diesel fuel is highly flammable, handle it carefully:

A. Use an approved fuel container.

B. Do not remove fuel tank cap while engine is hot or running.

C. Do not smoke while handling fuel.

D. Fill fuel tank outdoors and only to within an inch of the top of the tank, not the filler neck. Do not overfill.

E. Wipe up any spilled fuel.

WHILE OPERATING

9. Sit on the seat when starting and operating the machine.

10. Before starting the engine:

A. Engage the parking brake.

B. Make sure traction pedal is in NEUTRAL and the ENABLE / DISABLE switch is in DISABLE.

C. After engine is started, release parking brake and keep foot off traction pedal. Machine must not move. If movement is evident, the neutral return mechanism is adjusted incorrectly; therefore, shut engine off and adjust until machine does not move when traction pedal is released.

11. Seating capacity is one person. Therefore, never carry passengers.

12. Do not run engine in a confined area without adequate ventilation. Exhaust fumes are hazardous and could possibly be deadly.

13. Check interlock switches daily for proper operation. If a switch fails, replace it before operating the machine. The interlock system is for your protection, so do not bypass it. Replace all interlock switches every two years.

14. Using the machine demands attention and to prevent loss of control:

A. Operate only in daylight or when there is good artificial light.

B. Drive slowly

C. Watch for holes or other hidden hazards.

D. Look behind machine before backing up.

E. Do not drive close to a sand trap, ditch, creek or other hazard.

F. Reduce speed when making sharp turns and turning on a hillside.

G. Avoid sudden stops and starts.

15. Traverse slopes carefully. Do not start or stop suddenly when traveling uphill or downhill.

16. Operator must be skilled and trained in how to drive on hillsides. Failure to use caution on slopes or hills may cause loss of control and vehicle to tip or roll possibly resulting in personal injury or death. On 4 wheel drive models, always use the seat belt and ROPS together.

17. If engine stalls or loses power and cannot make it to the top of a slope, do not turn machine around. Always back slowly straight down the slope.

SAFETY INSTRUCTIONS

18. DON'T TAKE AN INJURY RISK! When a person or pet appears unexpectedly in or near the mowing area, **STOP MOWING**. Careless operation, combined with terrain angles, ricochets, or improperly positioned guards can lead to thrown object injuries. Do not resume mowing until area is cleared.

19. Do not touch engine, muffler or exhaust pipe while engine is running or soon after it is stopped. These areas could be hot enough to cause burns.

20. If cutting unit strikes a solid object or vibrates abnormally, stop immediately, turn engine off, set parking brake and wait for all motion to stop. Inspect for damage. If reel or bedknife is damaged, repair or replace it before operating. Do not attempt to free blocked cutting unit by reversing reel direction. Damage to reel may result.

21. Before getting off the seat:

A. Move traction pedal to neutral.

B. Set parking brake.

C. Disengage cutting units and wait for reels to stop.

D. Stop engine and remove key from switch.

E. Toro recommends that anytime the machine is parked (short or long term) the cutting units should be lowered to the ground. This relieves pressure from the lift circuit and eliminates the risk of cutting units accidentally lowering to the ground.

F. Do not park on slopes unless wheels are chocked or blocked.

MAINTENANCE

22. Before servicing or making adjustments, stop engine and remove key from the switch.

23. Make sure machine is in safe operating condition by keeping all nuts, bolts and screws tight.

24. Make sure all hydraulic line connectors are tight, and all hydraulic hoses and lines are in good condition before applying pressure to the system.

25. Keep body and hands away from pin hole leaks in hydraulic lines that eject high pressure hydraulic fluid. Use cardboard or paper to find hydraulic leaks. Hydraulic fluid escaping under pressure can penetrate skin and cause injury. Fluid accidentally injected into the skin must be surgically removed within a few hours by a doctor familiar with this form of injury or gangrene may result.

26. Before disconnecting or performing any work on the hydraulic system, all pressure in system must be relieved by stopping engine and lowering cutting units to the ground.

27. If major repairs are ever needed or assistance is desired, contact an Authorized Toro Distributor.

28. To reduce potential fire hazard, keep engine area free of excessive grease, grass, leaves and dirt. Clean protective screen on front of engine frequently.

29. If engine must be running to perform maintenance or an adjustment, keep hands, feet, clothing and other parts of the body away from cutting units and other moving parts. Keep everyone away.

30. Do not overspeed the engine by changing governor setting. To assure safety and accuracy, have an Authorized Toro Distributor check maximum engine speed.

31. Shut engine off before checking or adding oil to the crankcase.

32. Disconnect battery before servicing the machine. If battery voltage is required for troubleshooting or test procedures, temporarily connect the battery.

33. At the time of manufacture, the machine conformed to the safety standards for riding mowers. To assure optimum performance and continued safety certification of the machine, use genuine Toro replacement parts and accessories. Replacement parts and accessories made by other manufacturers may result in non-conformance with the safety standards, and the warranty may be voided.

SOUND PRESSURE LEVEL

This unit has an equivalent continuous A-weighted sound pressure at the operator ear of: 88 dB(A), based on measurements of identical machines per Directive 98/37/EC and amendments.

SOUND POWER LEVEL

This unit has a guaranteedsound power level of: 102 dB(A)/1 pW, based on measurements of identical machines per Directive 2000/14/EC and amendments.

VIBRATION LEVEL

Hand-Arm

This unit does not exceed a vibration level of 2.5 m/s^2 at the hands based on measurements of identical machines per ISO 5349 procedures.

Whole Body

This unit does not exceed a vibration level of 0.5 m/s^2 at the posterior based on measurements of identical machines per ISO 2631 procedures.

SAFETY AND INSTRUCTION DECALS

The following safety and instruction decals are affixed to the traction unit. If any decal becomes illegible or damaged, install a new decal. Part numbers are listed below and in your Parts Catalog.

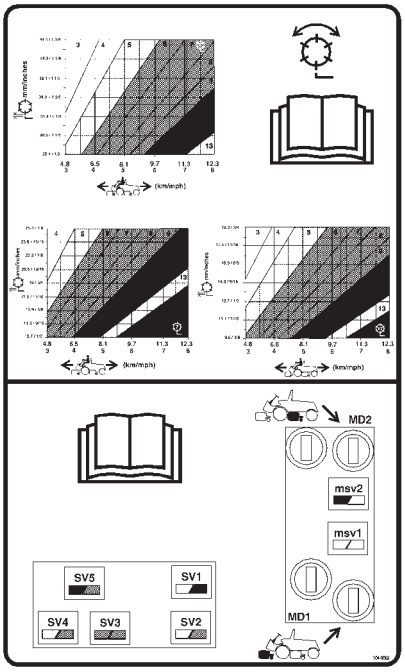

UNDER SEAT PLATE
(Part No. 104—0082)

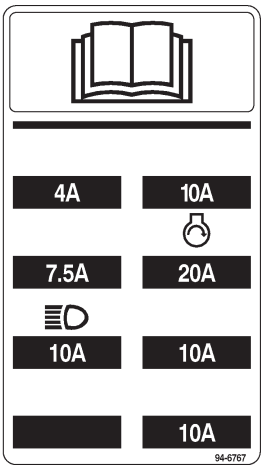

INSIDE CONTROL BOX
(Part No. 94—6767)

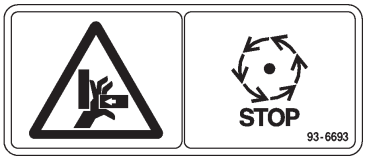

UNDER FLOOR PLATE
(Part No. 93—6693)



ON UNDERSIDE OF SEAT PLATE
(Part No. 93—8060)

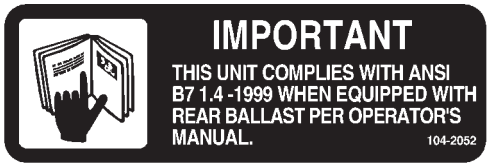

ON FRAME UNDER SEAT
(Part No. 104—9298)



INSIDE CONTROL BOX
(Part No. 104—9298)

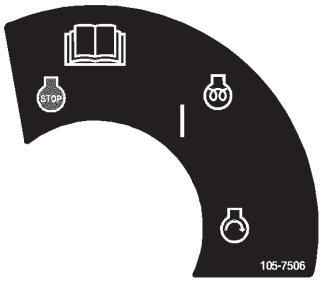

ON TOWER
(Part No. 105—7506)

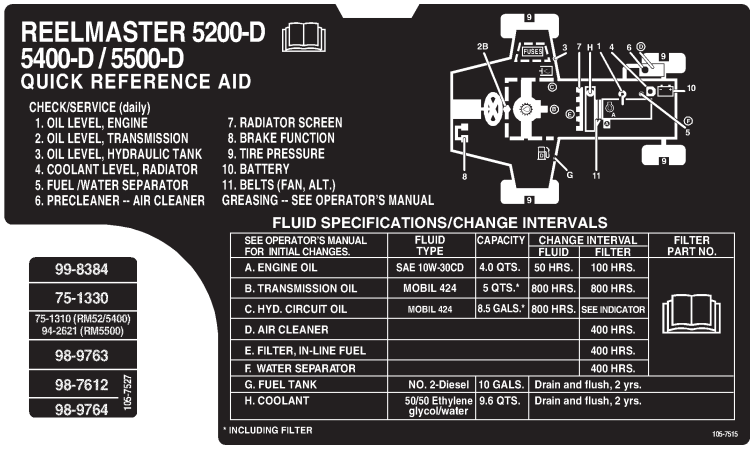

ON BOTTOM OF TOOL BOX COVER
(Part No. 105—7515 & 105—7527)

SAFETY AND INSTRUCTION DECALS



ON FRAME
(Part No. 93—6691)

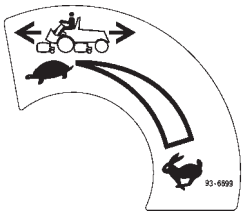

ON TOWER
(Part No. 93—6699)

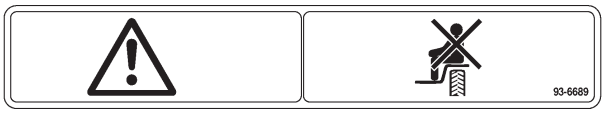

ON FENDERS
(Part No. 93—6689)

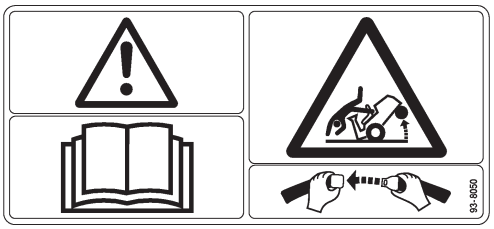

ON ROLL BAR ROOF
(Part No. 93—8050)
(Model 03551 only)



ON REAR AXLE
(Part No. 93—6697)
(Models 03551 only)

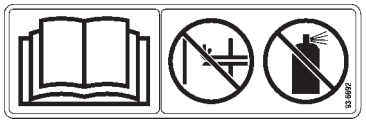

ON AIR CLEANER
(Part No. 93—6692)

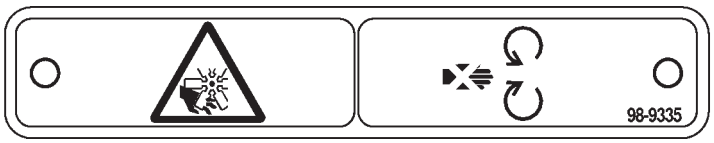

ON FAN SHROUD
(Part No. 98—9335)

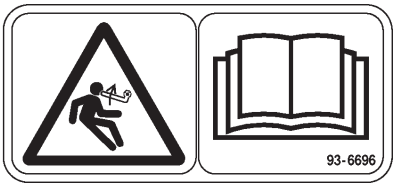

ON REAR LIFT ARMS
(Part No. 93—6696)

SAFETY AND INSTRUCTION DECALS

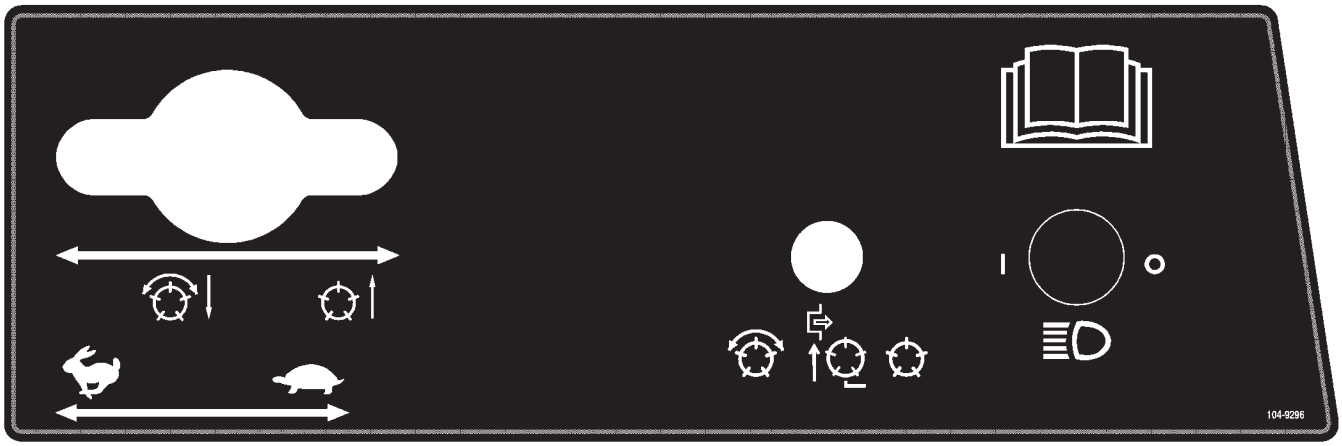

ON CONTROL PANEL
(Part No. 104–9296)



ON FRONT RIGHT LIFT ARM
(Part No. 93–6687)



ON GAUGE BAR
(Part No. 98–7976)



ON RIGHT FENDER
(Part No. 93–6686)

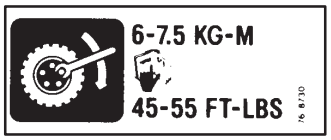

ON FRONT WHEELS
(Part No. 76–8730)



ON LEFT FENDER
(Part No. 93–6680)

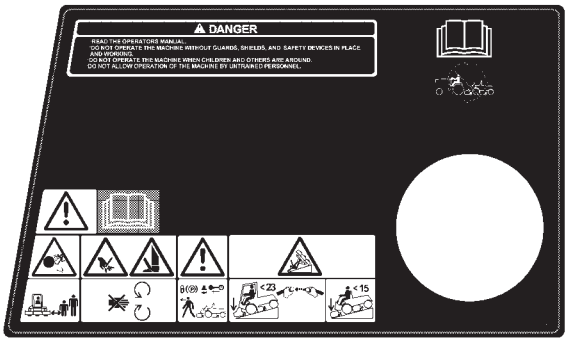

ON TOOL BOX COVER
(Part No. 104–9294)

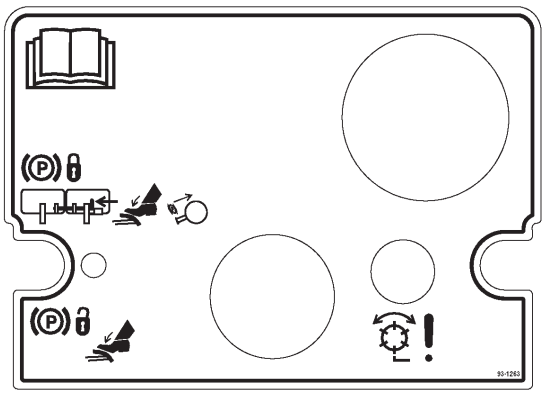

ON TOP OF STEERING TOWER
(Part No. 93–1263)

SPECIFICATIONS

Engine: Kubota three cylinder, 4 cycle, liquid cooled, turbo diesel engine. 35 hp @ 3000 rpm. Governed to 3200 rpm. 68.5 cu. in. (1123 cc) displacement. Heavy duty, 3-stage, remote mounted air cleaner. High water temperature shutdown switch.

Main Frame: All welded formed steel frame, includes three tie—down loops.

Cooling System: Radiator capacity is approximately 7—1/2 qts. of 50/50 mixture of ethylene glycol anti—freeze. Remote mounted 1 qt. expansion tank. Removeable oil cooler/radiator intake screen. Air to oil cooler, mounted to front of radiator, tips forward for cleaning

Fuel System: Fuel tank capacity is 10 gal. of #2 diesel fuel. Equipped with a fuel filter/water separator to capture water in the fuel.

Traction System: Foot pedal controls forward/reverse ground speed. Ground speed: 0 —10 m.p.h forward and 0-4 reverse. Hydrostatic transmission mounted directly on a 20.9:1 ratio front axle. Axle/reservoir capacity is 5 qts. Replaceable filter mounted directly on transmission housing. Model 03551 only—Mechanical rear axle is coupled to front axle by a driveshaft and overrunning clutch.

Cutting Unit Drive System: Hydraulic reel motors feature quick disconnects to ease removal/installation on cutting units. Hydraulic fluid reservoir capacity is 8.5 gal. System protected by a filter assembly with restriction bypass and service indicator.

Seat: Deluxe high back seat with adjustable fore and aft travel and weight and height adjustment. Tool box at left side of seat.

Steering System: Power steering with dedicated power source.

Tires: Two rear steering tires: 20 x 10-10, tubeless, 6-ply rating. Two front tires: 26.5 x 14.00-12 tubeless, 4-ply rating. Recommended tire pressure for front and rear tires is 10-15 psi.

Brakes: Individual drum type wheel brakes on front traction wheels. Brakes controlled by individual pedals operated by the left foot. Hydrostatic braking through traction drive.

Electrical System: Automotive type electrical system. 12 volt, maintenance free battery with 530 cold cranking Amps @ 0 degrees F. and 85 minute reserve capacity @ 85 degrees F. 40 amp alternator with I.C. regulator/rectifier. Seat switch, reel and traction interlock switches. An electronic controller monitors and controls safety and operational functions. Parking brake switch and individual circuit backlap switches.

Controls: Foot operated traction and brake pedals. Hand operated throttle, traction speed control lever, parking brake lock, ignition switch with automatic preheat cycle, single joy stick control for cutting unit on/off and lift/lower. Cutting unit backlap controls and reel speed controls located under seat base.

Gauges: Hour meter, speedometer, fuel gauge, temperature gauge. 4 warning lamps: oil pressure, water temperature, amps and glow plug.

Diagnostics; The Automatic Control Electronics, ACE™ system allows precise timing and control of machine functions for maximum reliability. Optional hand held diagnostic display connects to an electronic control unit to pin point any electrical problems quickly and easily. Available DATA LOG™ system allows mechanic to find intermittent problems.

General Specifications (approx.):

Width—of—Cut:	100 in.
Overall Width:	
Transport	88 in.
Outside of front tires	87 in.
Outside of rear tires	52.5 in.
Overall Length:	
Without grass baskets:	113 in.
With grass baskets:	120 in.
Height:	
Without ROPS installed:	59 in.
With ROPS installed:	82 in.
Recommended Height—of—Cut:	
5 Blade Cutting Unit:	1.0—1.75 in.
7 Blade Cutting Unit:	.5—1.0 in.
11 Blade Cutting Unit:	.375—.75 in.
Weight:	
Models 03550	2962 lbs.*
Models 03551	3210 lbs.*

*With 7 Blade Cutting Units & full fluid levels

Optional Equipment

5 Blade Cutting Unit (7 in.)	Model No. 03860
7 Blade Cutting Unit (7 in.)	Model No. 03861
11 Blade Cutting Unit (7 in.)	Model No. 03862
Dethatching Cutting Unit	Model No. 03871
Grass Basket Kit	Model No. 03882
Armrest Kit	Model No. 30707
4 Wheel Drive Kit (For use with model 03550 only)	Model No. 03538
Turf Defender™ Electronic Leak Detector Kit	Model No. 03521

SPECIFICATIONS

Precleaner Bowl Extension Tube (Clamp, Part No. 20—4840 required to install extension tube)	Part No. 43-3810
Diagnostic ACE Tool	Part No. 85-4750
Weight Kit	Part No. 94-2836
High Torque Reel Motor	Part No. 98-9998
Wiehle Roller Scraper	Part No. 100-9908
Basket Tipper Kit	Part No. 100-9945
Rear Roller Scraper Kit	Part No. 100-9920
Full Roller Scraper Kit	Part No. 99-8668
Shoulder Wiehle Roller	Part No. 100-9911
Shoulder Wiehle Scraper	Part No. 100-9913
Low Height-of-Cut Bedknife*	Part No. 93-9774
Gauge Bar Assembly†	Part No. 98-1852
Angle Indicator	Part No. 99-3503
Backlapping Brush Assembly	Part No. TOR299100
Bedknife Screw Tool	Part No. TOR510880
Cutting Unit Tool Kit	Part No. TOR4070
Reel Drive Tool	Part No. TOR4074

***** For height-of-cut below 1/2″ (13 mm)

† Supplied with tractor

Specifications and design subject to change without notice.

LOOSE PARTS CHART

Note: Use this chart as a checklist to assure all parts necessary for assembly have been received. Without these parts, total set-up cannot be completed.

DESCRIPTION	QTY.	USE
Locking Hood Latch Lockwasher Nut Key Hood Latch Bracket Hood Latch Strap Capscrew 1/4-20 x 3/4″ lg. Flat Washer .281 x .625 Locknut 1/4—20	1 1 1 2 1 1 4 4 4	Mount Locking Hood Latch for CE.
Capscrew 3/8—16 x 1” lg. Flange Nut 3/8—16	1 1	Attach tipper chains to front cutting unit
Flange Head Capscrew 5/16-18 x 5/8″ Lg.	1	Replace Floor Panel Fastener for CE.
Counterweight O—ring (large)	5 10	Mount counterweights & motors to cutting units
Lynch Pin Steering Pin	5 5	Mount cutting units to traction unit
Diagnostic ACE Display Overlay (1)	1	Use for diagnosing machine malfunctions (Store in service shop until needed)
Gauge Bar Screws Wing Nuts	1 2 2	Use to set cutting units
Hydraulic Filter (Transmission)	1	Change filter after first 10 hours operation.
EEC Decal EEC Certificate	1 2	Affix to machine.
Operator’s Manual (Traction Unit) Parts Catalog	2 1	Read before operating machine.
Registration Card	1	Fill out and return to Toro.
Service Decal, Blank	1	Affix to machine (International only)

SET-UP INSTRUCTIONS

CONNECT BATTERY (Fig. 1)

WARNING

Connecting cables to the wrong post could result in personal injury and/or damage to the electrical system.

1. Open hood.

2. Ensure battery is securely fastened in place and check battery charge with a hydrometer. If battery needs charging, be sure at least one battery cable, preferable the positive (+) cable, is disconnected from the battery before connecting the charger.

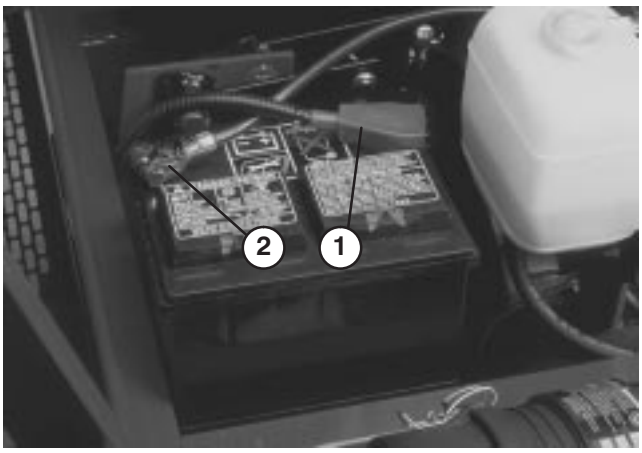

Figure 1

1. Positive Battery Cable
2. Negative Battery Cable

CAUTION

Wear safety goggles and rubber gloves when working with electrolyte. Charge the battery in a well ventilated area so gases produced while charging can dissipate. Since the gases are explosive, keep open flame and electrical spark away from the battery; do not smoke. Nausea may result if the gases are inhaled. Unplug charger from electrical outlet before connecting to, or disconnecting charger leads from battery posts.

3. Slide the red, positive battery cable onto the positive battery post and tighten nut securely.

4. If removed, slide the black, negative battery cable onto the negative battery post and tighten nut securely.

5. Coat both battery connections with Grafo 112X (skin over) grease, Toro Part No. 505-47, petroleum jelly or light grease to prevent corrosion and slide rubber boot over positive terminal.

6. Close hood.

MOUNT HOOD LATCH (Fig. 1 & 2)

1. Remove plug from hole in left front corner of hood (Fig. 1).

2. Open hood.

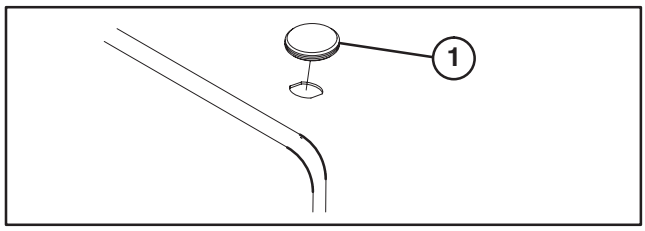

Figure 1

1. Hood plug

3. Mount locking latch to hood with lock washer and nut. Position switch with latch toward front of machine (FIg. 2).

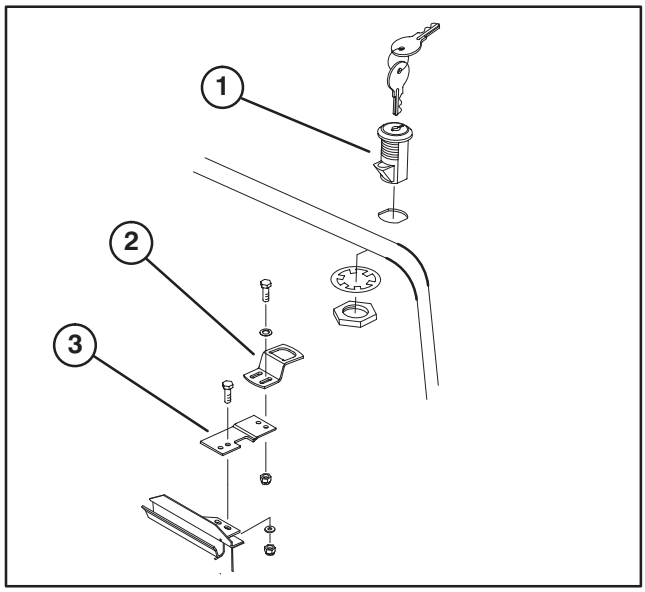

Figure 2

1. Locking latch
2. Latch bracket
3. Latch strap

4. Loosely mount latch strap to radiator support with (2) 1/4-20 x 3/4″ lg. capscrews, flat washers and locknuts (Fig. 2).

5. Loosely mount latch bracket to latch strap with (2) 1/4-20 x 3/4″ lg. capscrews, flat washers and locknuts (Fig. 2).

6. Adjust latch bracket, until aligned with locking latch, then tighten capscrews.

7. Rotate latch to locked and unlocked position with key. Remove key and store in memorable place.

8. Close hood.

SET-UP INSTRUCTIONS

REPLACE FLOOR PANEL FASTENER (Required for CE) (Fig. 3)

1. Remove fastener securing left front corner of floor panel to frame (Fig. 3).

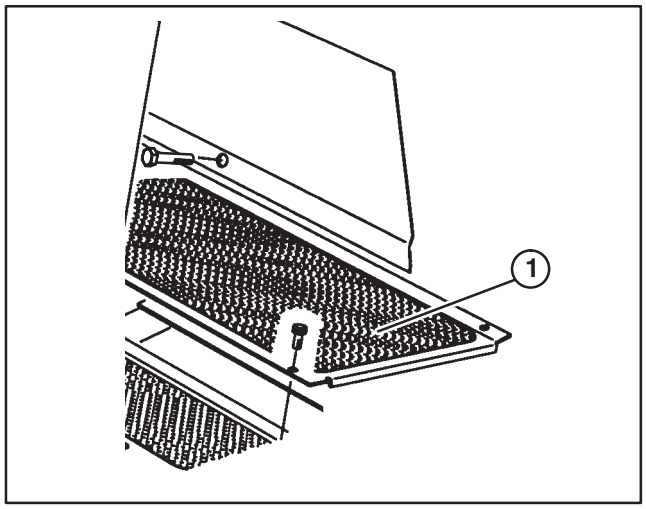

Figure 3
1. Floor panel

2. Replace with 5/16-18 x 5/8″ lg. flange head capscrew supplied in loose parts (Fig. 3)

CHECK TIRE PRESSURE

The tires are over−inflated for shipping. Therefore, release some of the air to reduce the pressure. Correct air pressure in the front and rear tires is 10-15 psi.

IMPORTANT: Maintain even pressure in all tires to assure uniform contact with turf.

INSTALL CUTTING UNITS (Fig. 2−8)

Cutting unit models 03860, 03861, and 03862 can be installed at any of the five mounting locations on the traction unit. Figure 4 shows the orientation of the hydraulic drive motor for each of the five locations. For any of the locations requiring the motor to be mounted on the right end of the cutting unit, install a counter weight on the left end of the cutting unit. For the locations requiring the motor to be mounted on the left end, install a counter weight on the right end of the cutting unit.

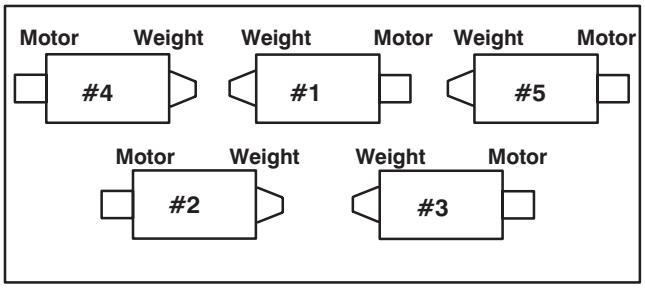

Figure 4

Note: Counter weight mounting capscrews are shipped installed on the right bearing housing of the cutting units. The capscrews on left bearing housing are to be used for securing the hydraulic motor.

1. Remove cutting units from cartons. Assemble and adjust per Cutting Unit Operator's Manual.

2. Remove protective plugs from each end of cutting unit.

3. Lubricate and install a large O-ring into bearing housing groove on each end of cutting unit (Fig. 5 & 8).

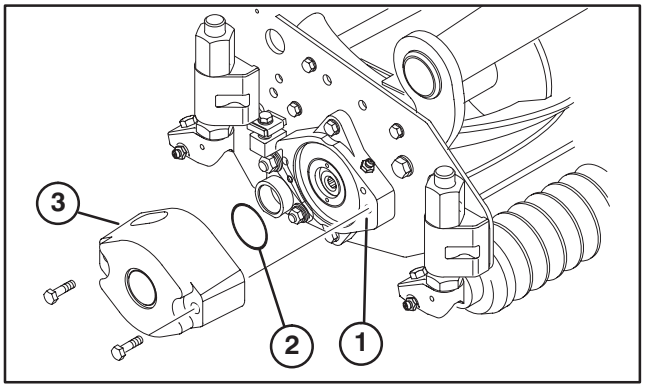

Figure 5
1. Bearing housing
2. O−ring−large
3. Counterweight

Note: Before installing cutting unit motors, lubricate internal splines of cutting unit reel shafts with grease.

4. Install a counter weight onto appropriate end of each cutting unit with capscrews provided (Fig. 5).

5. Thoroughly grease the cutting unit reel bearings prior to installation on the traction unit. Grease should be evident at the inboard reel seals. Refer to Cutting Unit Operator's Manual for greasing procedure.

6. Insert a thrust washer onto horizontal shaft of pivot knuckle as shown in figure 6.

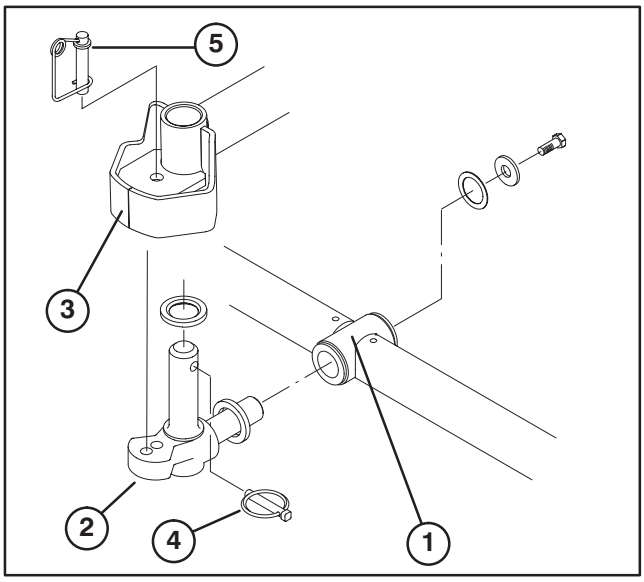

Figure 6

1. Carrier frame
2. Pivot knuckle
3. Lift arm steering plate
4. Lynch pin
5. Steering pin

7. Insert the horizontal shaft of the pivot knuckle into the mounting tube of the carrier frame (Fig. 6).

8. Secure pivot knuckle to carrier frame with a thrust washer, flat washer and a flange head capscrew (Fig. 6).

9. Insert a thrust washer onto vertical shaft of pivot knuckle (Fig. 6).

10. If removed, Insert the vertical shaft of the pivot knuckle into lift arm pivot hub (Fig. 6). Guide the pivot knuckle in place between the two rubber centering bumpers in the under side of the lift arm steering plate.

11. Insert the lynch pin into the cross hole on the pivot knuckle shaft (Fig. 6).

12. On front center cutting unit, remove nut securing turf compensation spring mounting bracket to left cutting unit stabilizer ear (Fig. 7). Insert left tipper chain onto capscrew and secure with nut removed.

13. Secure right tipper chain to right cutting unit stabilizer ears with a 3/8—16 x 1" lg capscrew and flange nut supplied in loose parts (Fig. 7).

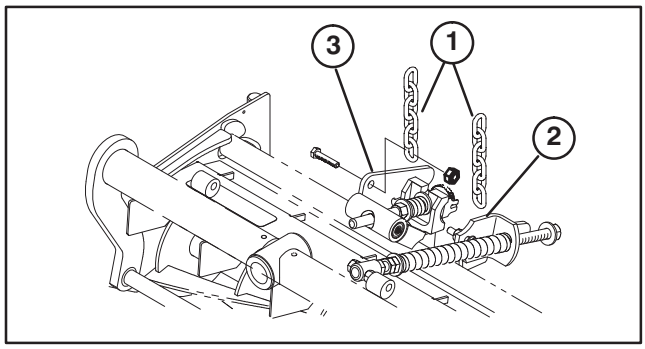

Figure 7

1. Lift chains
2. Turf compensation mounting bracket
3. Cutting unit stabilizer ear (2)

14. Mount the motor to the drive end of the cutting unit and secure with two capscrews provided (Fig. 8).

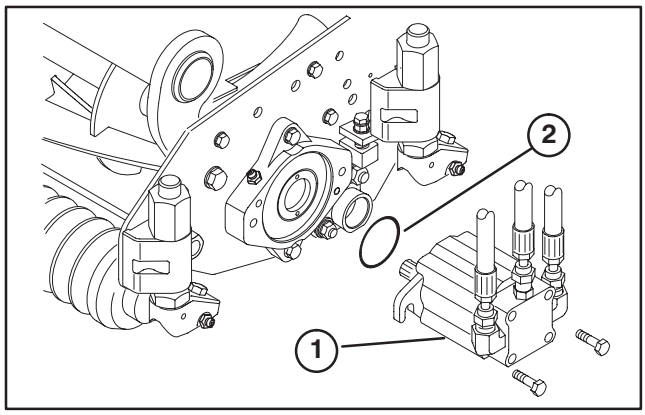

Figure 8

1. Motor
2. O-ring

NOTE: If fixed cutting unit position is required, insert steering pin into pivot knuckle mounting hole (Fig. 6). Hook spring wire around bottom of steering pin.

ALTERNATE ADJUSTMENTS

Traction units are setup at the factory appropriately for most fairway mowing applications.

The following adjustments are available for fine—tuning of the machine to the application:

Adjust Turf Compensation Spring

The Turf Compensation Spring (Fig. 9), connecting carrier frame to cutting unit, controls the amount of fore—aft rotation available, as well as the amount of ground clearance in transport and turn around.

The Turf Compensation Spring also transfers weight from the front to rear roller. (This helps to reduce a wave pattern in the turf, also known as bobbing.)

IMPORTANT: Make spring adjustments with cutting unit mounted to traction unit and lowered to shop floor. Refer to Traction Unit Operator's Manual for mounting instructions.

SET-UP INSTRUCTIONS

1. Tighten lock nut on rear of spring rod until the gap (C) between rear of spring bracket and front of washer is 1″ (26 mm) (Fig. 9).

2. Tighten hex nuts on front end of spring rod until the compressed length (A) of spring is 8” (203 mm) (Fig. 9).

NOTE: When cutting rough or undulating turf, increase compressed length (A) of spring to 8-1/2″ (216 mm) and gap (C) between rear of spring bracket and front of washer to 1—1/2″ (39 mm) (Fig. 9).

NOTE: As compressed spring length (A) DECREASES, weight transfer from front roller to rear roller INCREASES and carrier frame/cutting unit rotation angle (B) DECREASES.

NOTE: As gap (C) between spring bracket and washer INCREASES, cutting unit ground clearance DECREASES and carrier frame/cutting unit rotation angle (B) INCREASES.

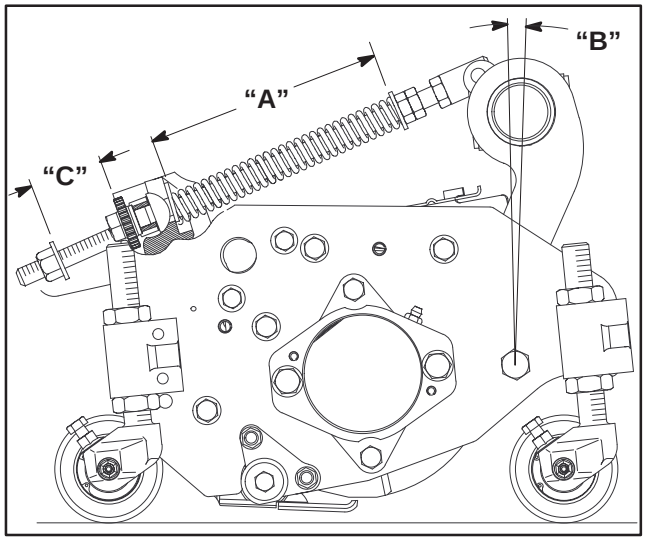

Figure 9

Lifted Height of Outer Front Cutting Units (Enable Position)

The turnaround height of the front outer cutting units (#4 & #5) may be increased to provide additional ground clearance on contoured fairways. Contact your distributor for assistance.

CUTTING UNIT STABILIZER

The stabilizer for the front center cutting unit can be adjusted up or down to stabilize the cutting unit when in the fully raised postion.

1. Raise all cutting units to the transport position and shut off the engine.

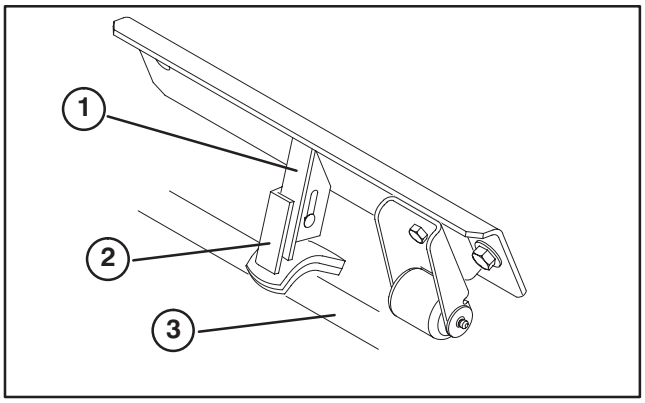

Figure 10

1. **Cutting unit stabilizer**
2. **Stabilizer saddle**
3. **Carrier frame**

2. On front center cutting unit, loosen the carriage bolts and nut securing the stabilzer saddle to stabilzer (Fig. 10).

3. Slide saddle down until it contacts cutting unit carrier frame. Tighten carriage bolts and nuts.

NOTE: Additional holes are provied to further adjustment, if required.

REAR BALLAST

Model 03550 (2 Wheel Drive) complies with the ANSI B71.4—1999 Standard when 100 lbs. of calcium chloride ballast is added to rear wheels and rear weight kit (Part No. 94-2836) is installed.

Model 03551 (4 Wheel Drive) complies with the ANSI B71.4—1999 Standard when 100 lbs. of calcium chloride ballast is added to rear wheels.

IMPORTANT: If a puncture occurs in a tire with calcium chloride, remove unit from turf area as quickly as possible. To prevent possible damage to turf, immediately soak affected area with water.

CAUTION

Before servicing or making adjustments to the machine, stop engine and remove key from the switch. Lower cutting units to the ground.

CHECK ENGINE OIL (Fig. 11)

1. Park machine on a level surface, stop engine and remove key from ignition switch. Open hood.

2. Remove dipstick, wipe clean and reinstall dipstick. Remove dipstick and check oil level on dipstick; Oil level should be up to FULL mark.

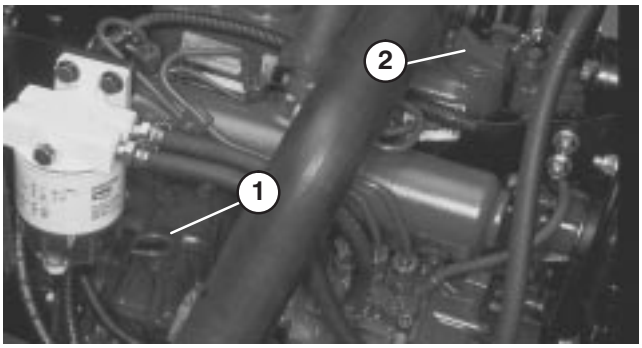

Figure 11
1. Dipstick
2. Oil Fill Cap

3. If oil is below FULL mark, remove fill cap and add SAE 10W−30 CD, CE, CF, CF−4 or CG−4 classification oil until level reaches FULL mark on dipstick. DO NOT OVERFILL. Crankcase capacity is 4.0 qt. with filter.

4. Install oil fill cap and close hood.

CHECK COOLING SYSTEM (Fig. 12)

Clean debris off screen, oil cooler and front of radiator daily, more often if conditions are extremely dusty and dirty; refer to section on Engine Cooling System.

The cooling system is filled with a 50 / 50 solution of water and permanent ethylene glycol anti−freeze. Check level of coolant in expansion tank at beginning of each day before starting the engine. Capacity of cooling system is 9.6 quarts.

CAUTION

If engine has been running, pressurized hot coolant can escape when radiator cap is removed and cause burns.

1. Check level of coolant in expansion tank. Coolant level should be between the marks on side of tank.



Figure 12
1. Expansion Tank

2. If coolant level is low, remove expansion tank cap and replenish the system. DO NOT OVERFILL.

3. Install expansion tank cap.

FILL FUEL TANK (Fig. 13)

1. Remove fuel tank cap.

2. Fill tank to about one inch below top of tank, not filler neck with No. 2 diesel fuel. Then install cap.

DANGER

Because diesel fuel is flammable, use caution when storing or handling it. Do not smoke while filling the fuel tank. Do not fill fuel tank while engine is running, hot, or when machine is in an enclosed area. Always fill fuel tank outside and wipe up any spilled diesel fuel before starting the engine. Store fuel in a clean, safety−approved container and keep cap in place. Use diesel fuel for the engine only; not for any other purpose.



Figure 13
1. Fuel Tank Cap

BEFORE OPERATING

CHECK TRANSMISSION FLUID (Fig. 14)

The front axle housing acts as the reservoir for the system. The transmission and axle housing are shipped from the factory with approximately 5 quarts of Mobil 424 hydraulic fluid. However, check level of transmission oil before engine is first started and daily thereafter.

1. Position machine on a level surface, lower the cutting units and stop the engine.

3. Remove floor panel.

4. Unscrew dipstick cap from the transmission filler neck and wipe it with a clean rag. Screw dipstick into filler neck. Remove the dipstick and check level of oil. If level is not within 1/2 inch from the groove in the dipstick, add enough oil to raise level to groove mark. DO NOT OVERFILL by more than 1/4 inch above groove.

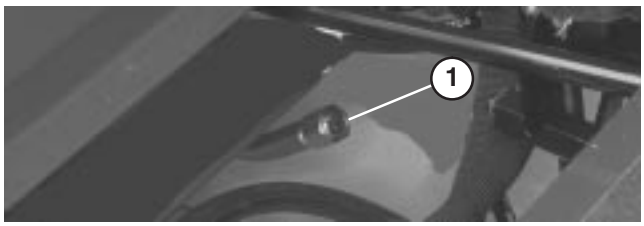

Figure 14
1. Transmission Dipstick Cap

5. Screw dipstick filler cap finger−tight onto filler neck. It is not necessary to tighten cap with a wrench.

CHECK HYDRAULIC FLUID (Fig. 15)

The machines reservoir is filled at the factory with approximately 8.5 gallons of high quality hydraulic fluid. **Check the level of hydraulic fluid before the engine is first started and daily thereafter.** Appropriate **hydraulic oils are listed below.**

The following list is not assumed to be all−inclusive. Hydraulic fluids produced by other manufacturers may be used if they can cross reference to find an equivalent to the products listed. Toro will not assume responsibility for damage caused by improper substitutions, so use only products from reputable manufacturers who will stand behind their recommendation.

Universal Tractor Hydraulic Fluid

Mobil	Mobil Fluid 424
Amoco	1000 Fluid
Chevron	Tractor Hydraulic Fluid
Conoco	Power-Tran 3
Exxon	Torque Fluid
Pennzoil	Hydra−Tranz
Shell	Donax TD
Texaco	TDH

Note: Many hydraulic fluids are almost colorless, making it difficult to spot leaks. A red dye additive for the hydraulic system oil is available in 2/3 oz. (20 ml) bottles. One bottle is sufficient for 4−6 gal (15−22 1) of hydraulic oil. Order part no.44−2500 from your authorized Toro distributor.

1. Position machine on a level surface, lower the cutting units and stop the engine.

2. Clean area around filler neck and cap of hydraulic tank. Remove cap from filler neck.

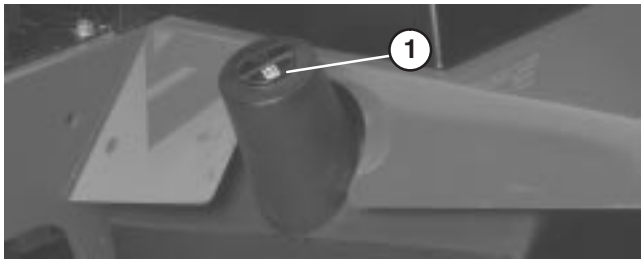

Figure 15
1. Hydraulic Tank Cap

3. Remove dipstick from filler neck and wipe it with a clean rag. Insert dipstick into filler neck; then remove it and check level of fluid. Fluid level should be within 1/4 inch of mark on dipstick.

4. If level is low, add appropriate fluid to raise level to full mark.

5. Install dipstick and cap onto filler neck.

CHECK REAR AXLE LUBRICANT

(Fig. 16 & 17) (Model 03551 only)

The rear axle has three separate reservoirs which use SAE 80W-90 wt. gear lube. Although the axle is shipped with lubricant from the factory, check the level before operating the machine.

1. Position the machine on a level surface.

2. Remove check plugs (3) from axle and make sure lubricant is up to bottom of each hole.

3. If level is low, remove center fill plug and add enough lubricant to bring the level up to the bottom of the center check plug hole.

4. Remove each end check plug and add enough lubricant to bring the level up to the bottom of each check plug hole.

5. Install all plugs.

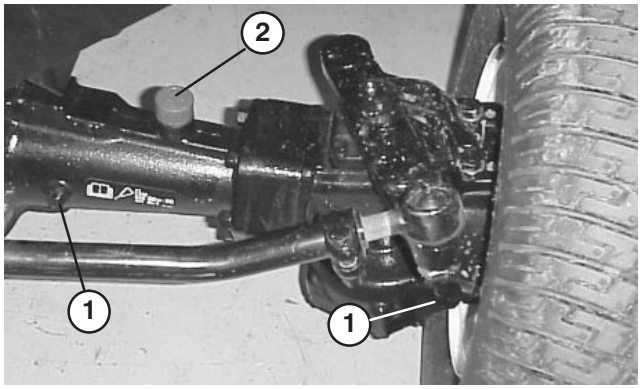

Figure 16

1. Check Plug
2. Fil Plug

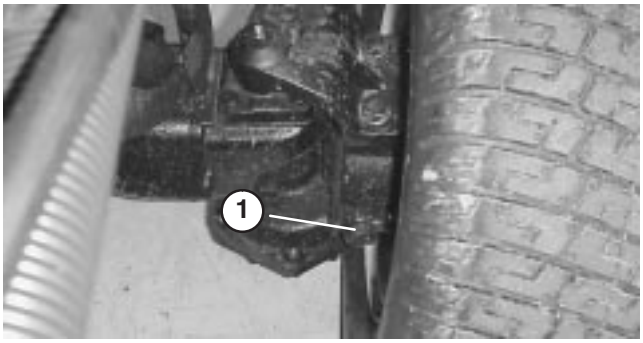

Figure 17

1. Left Check Plug (Rear of axle)

CHECK REEL TO BEDKNIFE CONTACT

Each day before operating, check reel to bedknife contact, regardless if quality of cut had previously been acceptable. There must be light contact across the full length of the reel and bedknife (refer to Adjusting Reel to Bedknife in Cutting Unit Operator's Manual).

CHECK TORQUE OF WHEEL NUTS

WARNING

Tighten wheel nuts to 45—55 ft-lb after 1—4 hours of operation and again after 10 hours of operation and every 250 hours thereafter. Failure to maintain proper torque could result in failure or loss of wheel which may result in personal injury.

KNOW YOUR CONTROLS

Seat (Fig. 18) — Seat adjusting lever allows 4 inch fore and aft adjustment. Seat adjusting knob adjusts seat for operators weight. To adjust seat fore and aft, pull lever on left side of seat assembly outward. After moving seat to desired location, release lever to lock seat into position. To adjust for operators weight, turn spring tension knob; clockwise to increase tension, counterclockwise to decrease spring tension.

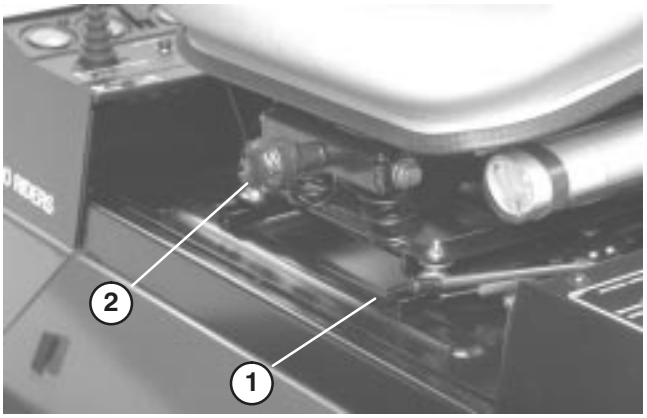

Figure 18

1. Seat Adjusting Lever
2. Seat Adjusting Knob

Traction Pedal (Fig. 19) — Controls forward and reverse operation. Depress top of pedal to move forward and bottom to move backward. Ground speed depends on how far pedal is depressed. For no load, maximum ground speed, fully depress pedal while throttle is in the FAST position.
To stop, reduce foot pressure on traction pedal and allow it to return to center position.



Figure 19

1. Traction Pedal

Brake Pedals (Fig. 20) — Two foot pedals operate individual wheel brakes for turning assistance, parking and to aid in obtaining better sidehill traction. Locking pin connects the pedals for parking brake operation and transport.

Parking Brake Latch (Fig. 20) — A knob on the left side of console actuates parking brake lock. To engage parking brake, connect pedals with locking pin, push down on both pedals and pull parking brake latch out. To release parking brake, depress both pedals until parking brake latch retracts.

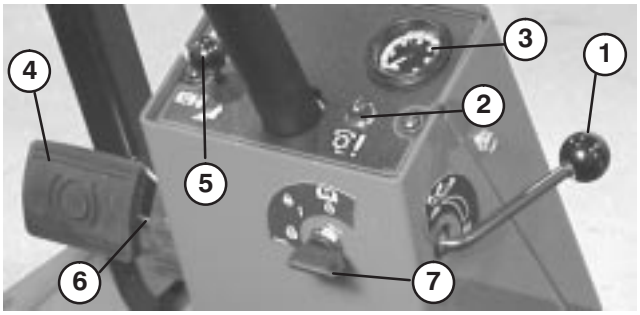

Figure 20

1. Forward Speed Limiter
2. Reel Control Light
3. Speedometer
4. Brake pedals
5. Parking Brake Latch
6. Locking Pin
7. Key switch

Traction Speed Limiter (Fig. 20) — Preset this lever to limit the amount the traction pedal can be depressed in the forward direction to maintain a constant mowing speed.

Reel Control Light (Fig. 20) — When lit, indicates a control system problem. Light blinks when glow plugs are preheating.

Key Switch (Fig. 20) — Three positions: OFF, ON / Preheat and START.

Speedometer (Fig. 20) — Indicates ground speed at which machine is traveling.

Lower Mow / Raise Control Lever (Fig. 21) — The lever raises and lowers the cutting units and also starts and stops the reels.

Fuel Gauge (Fig. 21) — Shows amount of fuel in tank.

Engine Oil Pressure Warning Light (Fig. 21) — Indicates dangerously low engine oil pressure.

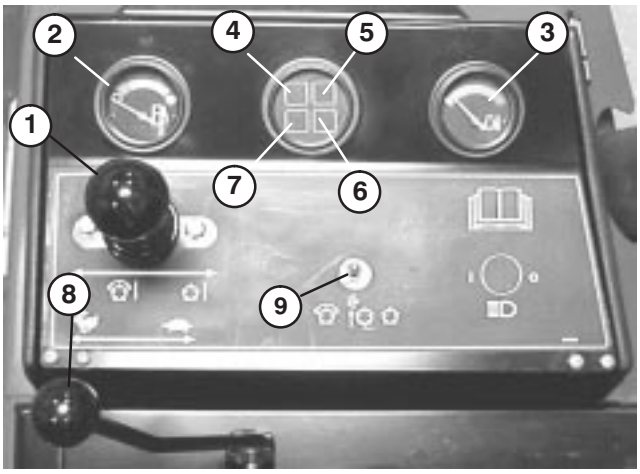

Figure 21

1. Lower Mow / Raise Control Lever
2. Fuel Gauge
3. Engine Coolant Temperature Gauge
4. Engine Oil Pressure Warning Light
5. Engine Coolant Temperature Warning Light
6. Glow Plug Indicator Light
7. Charge Indicator
8. Throttle Control
9. Enable / Disable switch

KNOW YOUR CONTROLS

Engine Coolant Temperature Warning Light (Fig. 21) – The light illuminates and engine shuts down when coolant reaches a dangerously high temperature.

Glow Plug Indicator Light (Fig. 21) – When lit, indicates glow plugs are on.

Charge Indicator (Fig. 21) – Illuminates when system charging circuit malfunctions.

Throttle Control (Fig. 21) – Move control forward to increase engine speed, rearward to decrease speed.

Enable / **Disable Switch** (Fig. 21) – Used in conjunction with lower mow / raise control lever (Joystick) to operate reels. Reels can be raised but not lowered when in mid position.

Backlap Knobs (Fig. 22) – Used in conjunction with lower mow / raise control lever for backlapping operation. Refer to Cutting Unit Maintenance, Backlapping.

Reel Speed Controls (Fig. 22) – Controls RPM of front and rear cutting units. #1 position is for backlapping. Remaining settings are for mowing operations. See section in manual for operating instructions and decal under seat for proper settings.

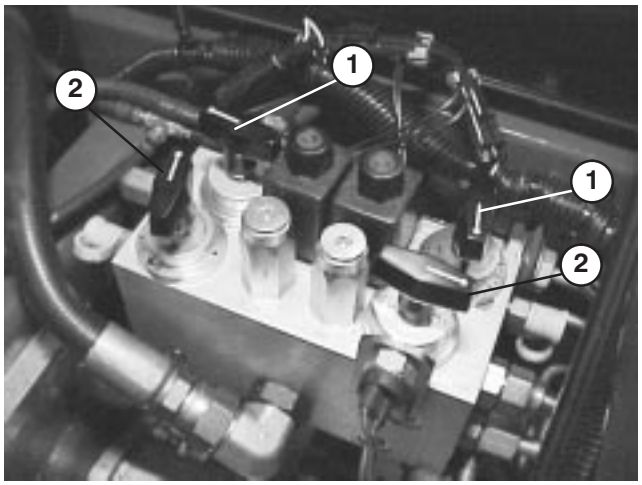

Figure 22

1. Reel Speed Controls
2. Backlap Knobs

Hour Meter (Located under control panel) shows total hours that machine has been operated.

OPERATING INSTRUCTIONS

CAUTION

Before servicing or making adjustments to the machine, stop engine and remove key from the switch. Lower cutting units to the ground.

STARTING AND STOPPING

IMPORTANT: The fuel system must be bled if any of the following situations have occurred.

A. Initial start up of a new machine.

B. Engine has ceased running due to lack of fuel.

C. Maintenance has been performed upon fuel system components; i.e., filter replaced, separator serviced, etc.

Refer to Bleeding The Fuel System

1. Sit on the seat, keep foot off traction pedal. Assure parking brake is engaged, traction pedal is in NEUTRAL, throttle is in FAST position and the ENABLE / DISABLE switch is in the DISABLE position.

2. Turn ignition switch to ON / Preheat position. An automatic timer will control preheat for 6 seconds. After preheat, turn key to START position. CRANK ENGINE FOR NO LONGER THAN 15 SECONDS. Release key when engine starts. If additional preheat is required, turn key to OFF position then to ON / preheat position. Repeat process as required.

3. Run engine at idle speed or partial throttle until engine warms up.

Note: Move throttle to FAST position when restarting a warm engine.

4. To stop, move all controls to NEUTRAL and set parking brake. Return throttle to the idle position, turn key to OFF and remove it from switch.

BLEEDING FUEL SYSTEM (Fig. 23)

1. Raise hood over engine.

2. Open the air bleed screw on the fuel injection pump (Fig. 23) with a 12 mm wrench.

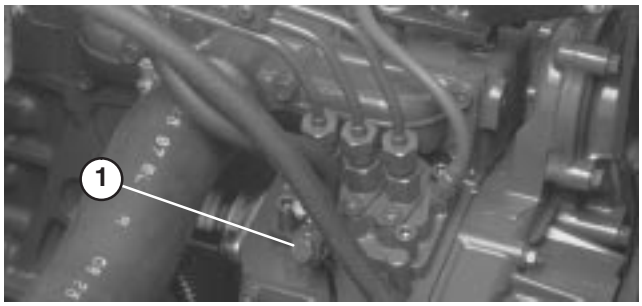

Figure 23
1. Fuel injection pump bleed screw

3. Turn key in ignition switch to the ON position. Electric fuel pump will begin operation, thereby forcing air out around air bleed screw. Leave key in ON position until solid stream of fuel flows out around screw. Tighten screw and turn key to OFF.

DANGER

Because diesel fuel is flammable, use caution when storing or handling it. Do not smoke while filling the fuel tank. Do not fill fuel tank while engine is running, hot, or when machine is in an enclosed area. Always fill fuel tank outside and wipe up any spilled diesel fuel before starting the engine. Store fuel in a clean, safety—approved container and keep cap in place. Use diesel fuel for the engine only; not for any other purpose.

Note: Normally, engine should start after above bleeding procedures are followed. However, if engine does not start, air may be trapped between injection pump and injectors; refer to Bleeding Air From Injectors.

SETTING REEL SPEED (Fig. 25)

To achieve a consistent, high quality—of—cut and a uniform after cut appearance, it is important that the reel speed controls (located under seat) be correctly set.

Adjust the reel speed controls as follows:

1. Select the height-of-cut at which the cutting units are set.

2. Choose the desired ground speed best suited for conditions.

OPERATING INSTRUCTIONS

3. Using the appropriate graph (See graph figure 24) for 5, 7 or 11 blade cutting units, determine the proper reel speed setting.

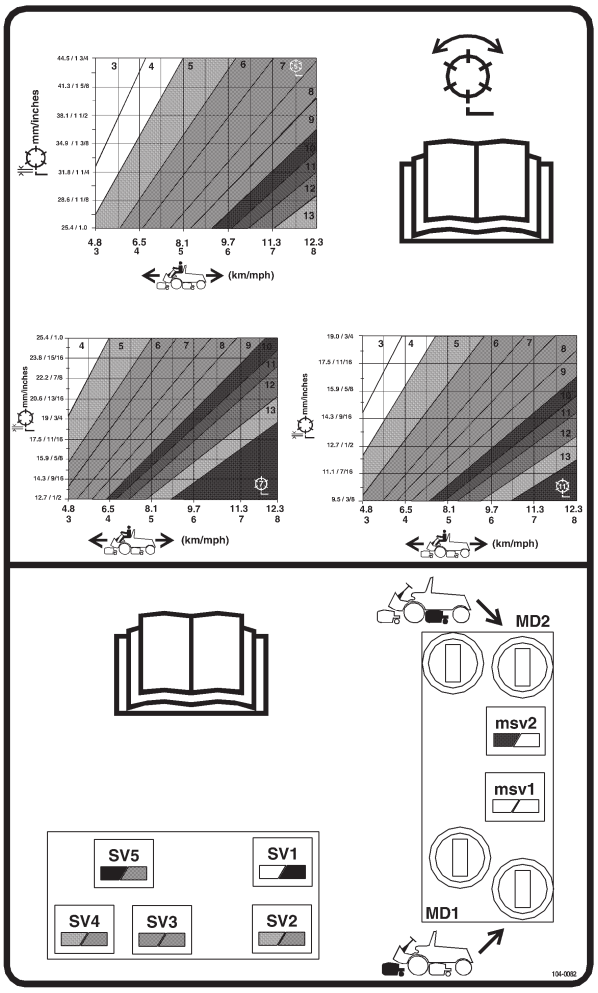

Figure 24

4. To set reel speed, rotate knobs (Fig. 25) until indicator arrows are in line with the number designating desired setting.

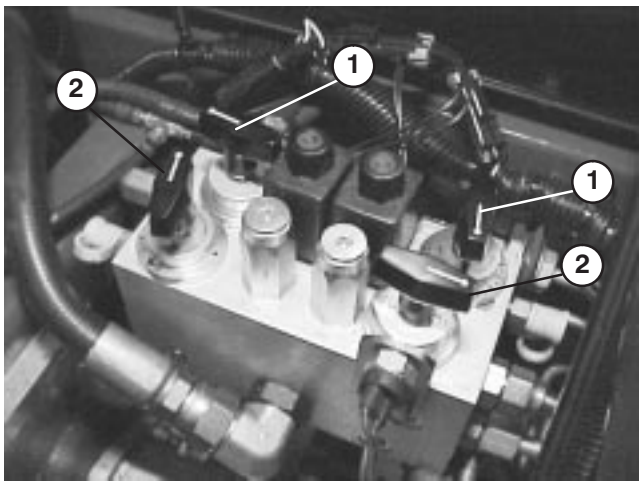

Figure 25
1. Backlap Knobs
2. Reel Speed Controls

5. Operate the machine for several days, then examine the cut to ensure satisfaction with the quality of cut. The reel speed selector knobs may be set one position on either side of the position indicated on the chart to account for differences in grass condition, grass length removed, and personal preference of the superintendent. For a cut with more grass removed but slightly more clip visibility, move the reel speed selector knobs one position lower than specified. For a cut with less grass removed and slightly less clip visibility, move the reel speed selector knobs one position higher than specified.

Note: Reel speed can be increased or decreased to compensate for turf conditions.

ADJUSTING REAR LIFT ARM COUNTERBALANCE (Fig. 26)

The counterbalance spring on the rear cutting unit lift arms can be adjusted to compensate for different turf conditions. Decreased counterbalance will help keep the cutting units on the ground when mowing at higher speeds and helps maintain a uniform height-of-cut in rough conditions or in areas of thatch build up.
Each counterbalance spring may be adjusted to one of three settings. Each increment increases or decreases down pressure on the cutting units by 2 lbs.

1. Position machine on a level surface, lower the cutting units, stop the engine, engage the parking brakes and remove key from ignition switch.

CAUTION

Springs are under tension, use caution when adjusting.

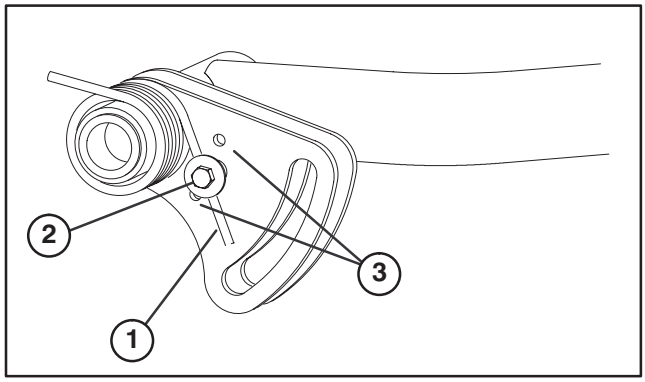

Figure 26
1. Counterbalance Spring
2. Spring Bolt
3. Adjustment Locations

2. Remove the capscrew and locknut while relieving spring tension.

5. Move spring bolt to desired location and install capscrew and locknut, while relieving spring tension.

OPERATING INSTRUCTIONS

TOWING TRACTION UNIT (Fig. 27 & 28)

If it becomes necessary to tow the machine, tow it forward only, for a short distance and at a speed no greater than 3 mph.

Note: If these towing limits are exceeded, severe damage to the hydrostatic transmission will occur.

To Tow a disabled machine:

1. Loosen and remove capscrews securing the drive shaft to the engine drive coupler. Loosen capscrews clamping drive shaft to transmission (Fig. 27). Remove drive shaft.

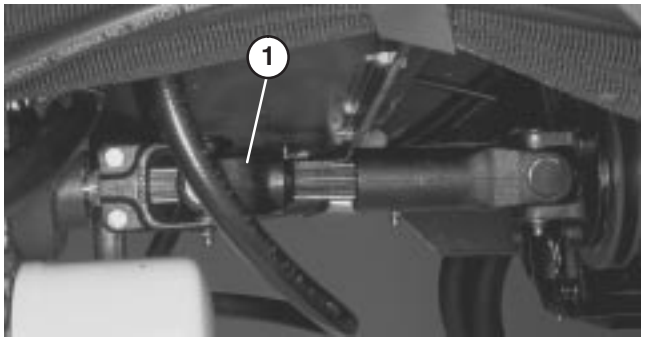

Figure 27

1. Drive Shaft

Important: If drive shaft is not removed before towing, the transmission input shaft will not be able to rotate, thus not allowing the transmission to maintain its internal lubrication. Severe damage to the hydrostatic transmission will occur.

2. Attach a suitable chain, strap or cable to the center of the front frame member (Fig. 28).

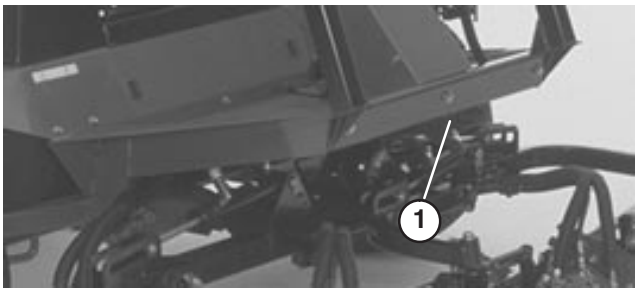

Figure 28

1. Center of Front Frame Member

Note: Lock both brake pedals together before towing.

3. Attach the other end of the towing device to a vehicle that is capable of towing the machine safely and at speeds below 3 mph.

4. An operator must be on the machine to steer it and keep the traction pedal fully depressed in the forward position while towing.

5. When towing is completed, reinstall driveshaft as shown in figure 27. The splines are designed to allow assembly only when the two halves of the shaft are properly oriented.

DIAGNOSTIC LIGHT (Fig. 29)

The RM 5500—D is equipped with a diagnostic light which indicates if the electronic controller is functioning correctly. The green diagnostic light is located under the control panel, next to the fuse block. When the electronic controller is functioning correctly and the key switch is moved to the ON position, the controller diagnostic light will be illuminated. The light will blink if the controller detects a malfunction in the electrical system. The light will stop blinking and automatically reset when the key switch is turned to the OFF position.

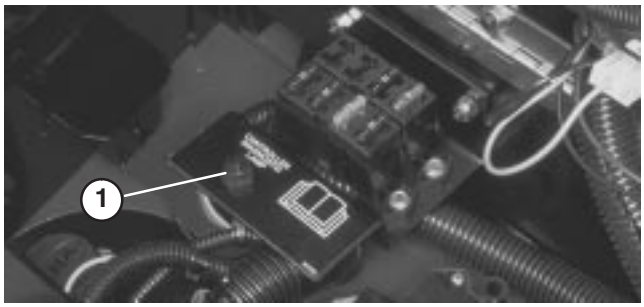

Figure 29

1. Electronic Controller Light

When the controller diagnostic light blinks, one of the following problems has been detected by the controller:

1. One of the outputs has been shorted.
2. One of the outputs is open circuited.

Using the diagnostic display, determine which output is malfunctioning, refer to Checking Interlock Switches.

If the diagnostic light is not illuminated when the key switch is in the ON position, this indicates that the electronic controller is not operating. Possible causes are:

1. Loopback is not connected.
2. The light is burned out.
3. Fuses are blown.
4. No battery power.

Check electrical connections, input fuses and diagnostic light bulb to determine malfunction. Make sure loopback connector is secured to wire harness connector.

DIAGNOSTIC ACE DISPLAY

The RM 5500—D is equipped with an electronic controller which controls most machine functions. The controller determines what function is required for various input switches (i.e. seat switch, key switch, etc.) and turns on the outputs to actuate solenoids or relays for the requested machine function.

For the electronic controller to control the machine as desired, each of the input switches, output solenoids and relays must be connected and functioning properly.

The Diagnostic ACE display is a tool to help the user verify correct electrical functions of the machine.

CHECKING INTERLOCK SWITCHES

The purpose of the interlock switches are to prevent the engine from cranking or starting unless the traction pedal is in NEUTRAL, the Enable / Disable switch is in DISABLE and the Lower Mow / Raise control is in the neutral position. In addition, the engine will stop when the traction pedal is depressed with operator off the seat or when parking brake is engaged.

CAUTION

THE INTERLOCK SWITCHES ARE FOR THE PROTECTION OF THE OPERATOR AND BYSTANDERS, AND TO ENSURE CORRECT OPERATION OF THE MACHINE, SO DO NOT BYPASS OR DISCONNECT THEM. CHECK OPERATION OF THE SWITCHES DAILY TO ASSURE INTERLOCK SYSTEM IS OPERATING. IF A SWITCH IS DEFECTIVE, REPLACE IT BEFORE OPERATING. THE CONTROLLER HAS THE ABILITY TO DETECT BYPASSED SWITCHES AND MAY PREVENT THE OPERATION OF THE MACHINE IF SWITCHES ARE BYPASSED. DO NOT RELY ENTIRELY ON SAFETY SWITCHES – USE COMMON SENSE!

To verify interlock switch function:

1. Park machine on a level surface, lower the cutting units, stop the engine and engage the parking brake.

2. Open control panel cover. Locate wire harness and connectors near controller. Carefully unplug loop back connector from harness connector.

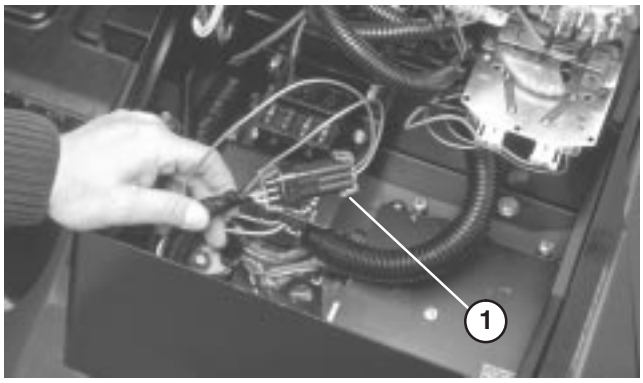

Figure 39

1. Wire Harness and Connectors

3. Connect the Diagnostic ACE display connector to the harness connector. Make sure correct overlay decal is positioned on Diagnostic ACE display.

4. Turn the key switch to the ON position, but do not start machine.

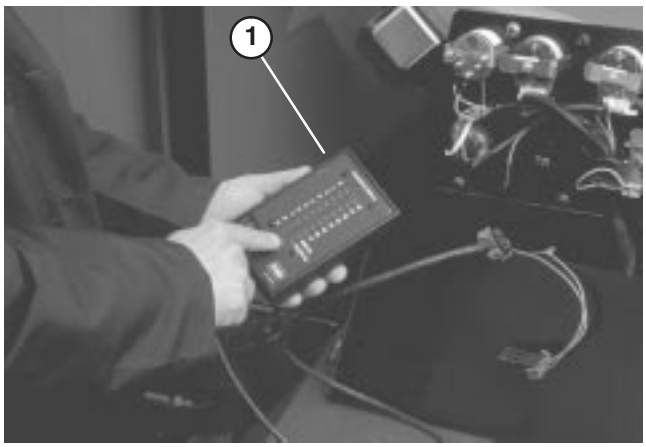

Figure 40

1. Diagnostic ACE

Note: The red text on the overlay decal refers to input switches and the green text refers to outputs.

5. The "inputs displayed" LED, on lower right column of the Diagnostic ACE, should be illuminated. If "outputs displayed" LED is illuminated, press the toggle button, on Diagnostic ACE, to change LED to "inputs displayed".

6. The Diagnostic ACE will illuminate the LED associated with each of the inputs when that input switch is closed.
Individually, change each of the switches from open to closed (i.e., sit on seat, engage traction pedal, etc.), and note that the appropriate LED on Diagnostic ACE will blink on and off when corresponding switch is closed. Repeat on each switch that is it possible to be changed by hand.

7. If switch is closed and appropriate LED does not turn on, check all wiring and connections to switch and/or check switches with an ohm meter. Replace any defective switches and repair any defective wiring.

The Diagnostic ACE also has the ability to detect which output solenoids or relays are turned on. This is a quick way to determine if a machine malfunction is electrical or hydraulic.

To verify output function:

1. Park machine on a level surface, lower the cutting units, stop the engine and engage the parking brake.

2. Open control panel cover. Locate wire harness and connectors near controller. Carefully unplug loopback connector from harness connector.

3. Connect the Diagnostic ACE connector to the harness connector. Make sure correct overlay decal is positioned on Diagnostic ACE.

4. Turn the key switch to the ON position, but do not start machine.

Note: The red text on the overlay decal refers to input switches and the green text refers to outputs.

5. The "outputs displayed" LED, on lower right column of Diagnostic ACE, should be illuminated. If "inputs displayed" LED is illuminated, press the toggle button, on Diagnostic ACE, to change LED to "outputs displayed".

Note: It may be necessary to toggle between "inputs displayed" and "outputs displayed" several times to do the following step. To toggle back and forth, press toggle button once. This may be done as often as required. DO NOT HOLD BUTTON.

6. Sit on the seat and attempt to operate the desired function of the machine. (If you need help verifying the correct input settings for each function, refer to the Logic Chart on page 24) The appropriate output LED's should illuminate to indicate that the ECU is turning on that function.

Note: If any output LED is blinking, this indicates an electrical problem with that OUTPUT. Repair / replace defective electrical parts immediately. To reset a blinking LED, turn the key switch "OFF", then back "ON".

If no output LED's are blinking, but the correct output LED's do not illuminate, verify that the required input switches are in the necessary positions to allow that function to occur. Verify correct switch function.

If the output LED's are on as specified, but the machine does not function properly, this indicates a non—electrical problem. Repair as necessary.

Note: Due to electrical system constraints, the output LED's for "START", "PREHEAT" and "ETR/ALT" may not blink even though an electrical problem may exist for those functions. If the machine problem appears to be with one of these functions, be certain to check the electrical circuit with a volt / ohm meter to verify that no electrical problem exists to these functions.

If each output switch is in the correct position and functioning correctly, but the output LED's are not correctly illuminated, this indicates an ECU problem. If this occurs, contact your Toro Distributor for assistance.

IMPORTANT: The Diagnostic ACE display must not be left connected to the machine except for trouble shooting. It is not designed to withstand the environment of the machine's every day use. When done using Diagnostic ACE, disconnect it from the machine and reconnect loopback connector to harness connector. Machine will not operate without loopback connector installed on harness. Store Diagnostic ACE in dry, secure location in shop, not on machine.

HYDRAULIC VALVE SOLENOID FUNCTIONS

Use the list below to identify and describe the different functions of the solenoids in the hydraulic manifold. Each solenoid must be energized to allow function to occur.

Solenoid	Function
MSV1	Front reel circuit
MSV2	Rear reel circuit
SV4	Lift / lower front wing cutting units
SV3	Lift / lower center cutting unit
SV5	Lift / lower rear cutting unit
SV1	Lower any cutting units
SV1,SV2	Lift any cutting units

OPERATING CHARACTERISTICS

Familiarization — Before mowing grass, practice operating machine in an open area. Start and stop the engine. Operate in forward and reverse. Lower and raise cutting units and engage and disengage reels. When you feel familiar with the machine, practice operating up and down slopes at different speeds.
The brakes can be used to assist in turning the machine. However, use them carefully, especially on soft or wet grass conditions because the turf may be torn accidentally. Individual turning brakes may also be used to help maintain traction. For example, in some slope conditions, the uphill wheel slips and loses traction. If this situation occurs, depress uphill turn pedal gradually and intermittently until the uphill wheel stops slipping, thus, increasing traction on the downhill wheel.

WARNING: When operating machine, always use the seat belt and ROPS together.

Warning System — If a warning light comes on during operation, stop the machine immediately and correct the problem before continuing operation. Serious damage could occur if the machine is operated with a malfunction.

Mowing —Start engine and move throttle to FAST so engine is running at maximum speed. Move the ENABLE / DISABLE switch to ENABLE and use the LOWER MOW / RAISE lever to control the cutting units (front cutting units are timed to lower before the rear cutting units). To move forward and cut grass, press traction pedal forward.

Transport — Move the ENABLE / DISABLE switch to joy stick DISABLE and raise the cutting units to the transport position. Be careful when driving between objects so you do not accidentally damage the machine or cutting units. Use extra care when operating machine on slopes. Drive slowly and avoid sharp turns on slopes to prevent roll overs. The cutting units should be lowered when going downhill for steering control.

LUBRICATION

CAUTION

Before servicing or making adjustments to the machine, stop engine and remove key from the switch. Lower cutting units to the ground.

GREASING BEARINGS AND BUSHINGS

(Fig. 30 — 37)

The machine has grease fittings that must be lubricated regularly with No. 2 General Purpose Lithium Base Grease. If machine is operated under normal conditions, lubricate all bearings and bushings after every 50 hours of operation. Lubricate bearings and bushings immediately after every washing, regardless of the interval listed.

1. The grease fitting locations and quantities are: Engine Drive shaft (3), (Fig. 30); Cutting unit carrier frame and pivot (2 ea.), (Fig. 31); Rear lift arm pivots (2), Drive shaft clutch (1) (Fig. 32); Rear axle tie rod (2), Steering cylinder ball joints (2), Axle steering pivots (2) Rear axle pivot (1) (Fig. 33); Traction control linkage at transmission (1), Drive shaft support bearing (1), Rear axle drive shaft (3) (Fig. 34); Brake pedal (1) (Fig. 35); Lift cylinders (5) (Fig. 36), front lift arm pivots (3) (Fig. 37) and fan drive pulley (Fig. 38).

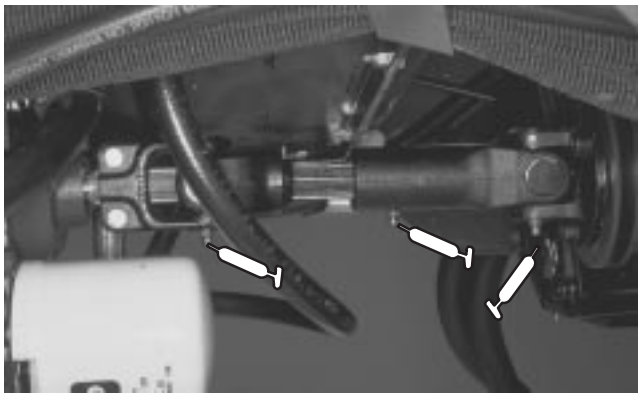

Figure 30

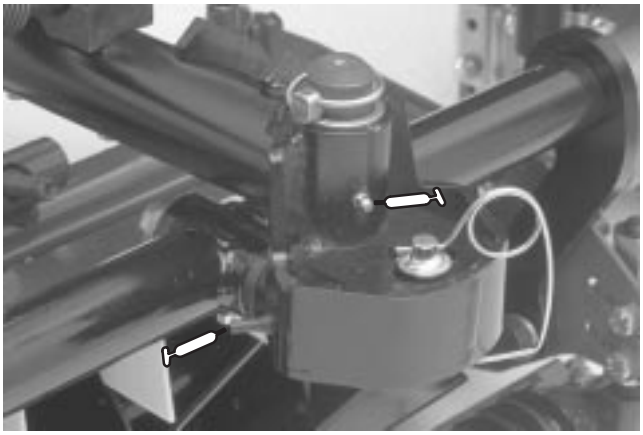

Figure 31

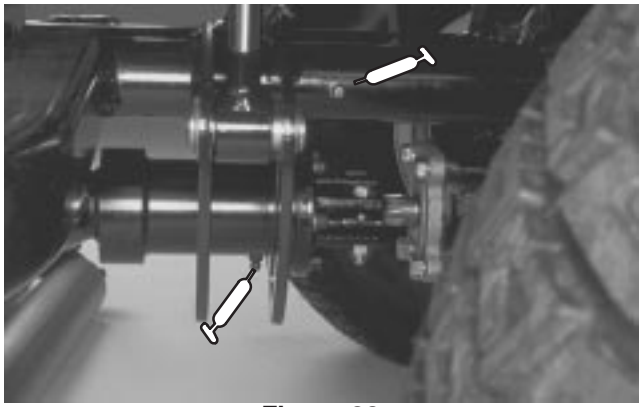

Figure 32

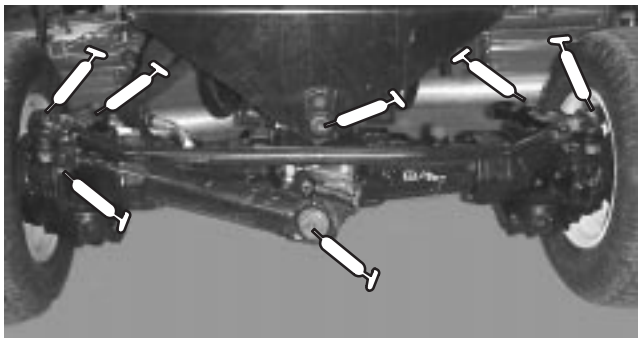

Figure 33

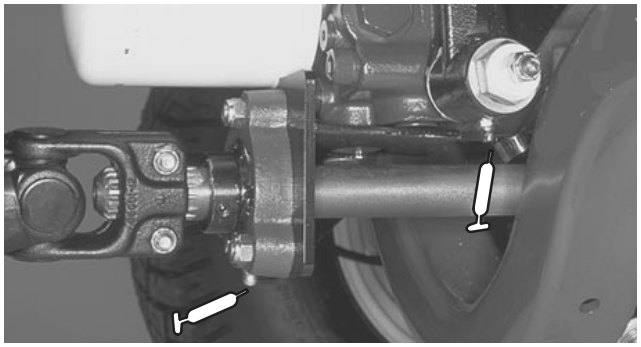

Figure 34



Figure 35

LUBRICATION

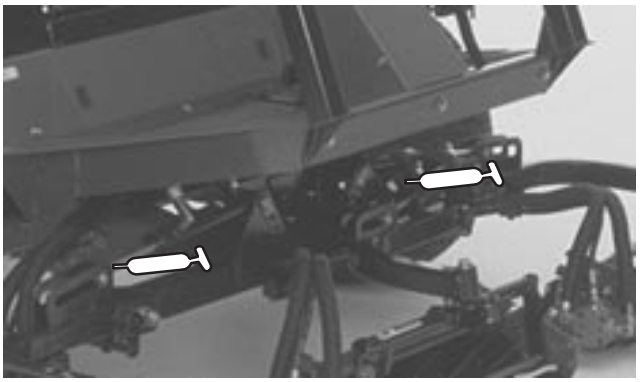

Figure 36

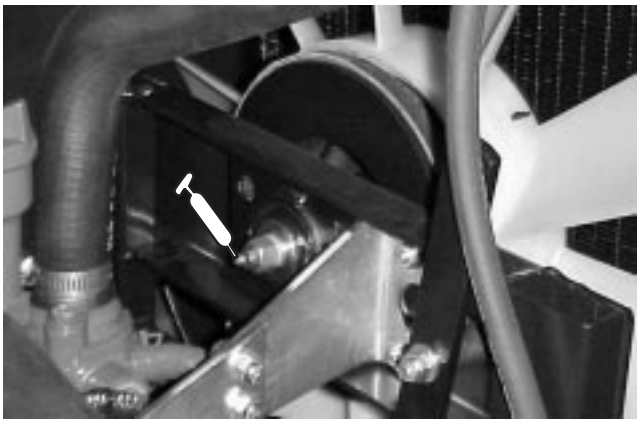

Figure 38

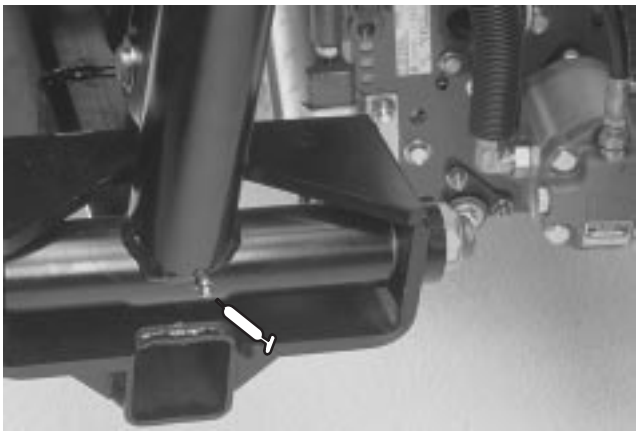

Figure 37

SERVICE INTERVAL CHART

REELMASTER 5200-D
5400-D / 5500-D
QUICK REFERENCE AID

CHECK/SERVICE (daily)

1. OIL LEVEL, ENGINE
2. OIL LEVEL, TRANSMISSION
3. OIL LEVEL, HYDRAULIC TANK
4. COOLANT LEVEL, RADIATOR
5. FUEL /WATER SEPARATOR
6. PRECLEANER -- AIR CLEANER
7. RADIATOR SCREEN
8. BRAKE FUNCTION
9. TIRE PRESSURE
10. BATTERY
11. BELTS (FAN, ALT.)

GREASING -- SEE OPERATOR'S MANUAL

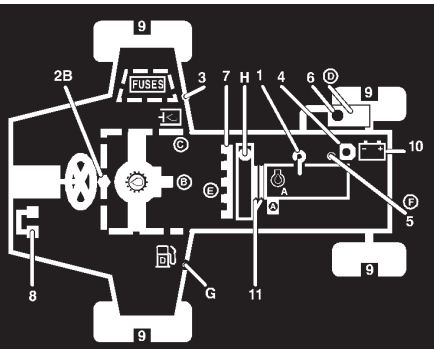

FLUID SPECIFICATIONS/CHANGE INTERVALS

SEE OPERATOR'S MANUAL FOR INITIAL CHANGES.	FLUID TYPE	CAPACITY	CHANGE INTERVAL		FILTER PART NO.
			FLUID	FILTER	
A. ENGINE OIL	SAE 10W-30CD	4.0 QTS.	50 HRS.	100 HRS.	
B. TRANSMISSION OIL	MOBIL 424	5 QTS.*	800 HRS.	800 HRS.	
C. HYD. CIRCUIT OIL	MOBIL 424	8.5 GALS.*	800 HRS.	SEE INDICATOR	
D. AIR CLEANER				400 HRS.	
E. FILTER, IN-LINE FUEL				400 HRS.	
F. WATER SEPARATOR				400 HRS.	
G. FUEL TANK	NO. 2-Diesel	10 GALS.	Drain and flush, 2 yrs.		
H. COOLANT	50/50 Ethylene glycol/water	9.6 QTS.	Drain and flush, 2 yrs.		

* INCLUDING FILTER

105-7515

DAILY MAINTENANCE CHART AND CHECKLIST

Daily Maintenance: (duplicate this page for routine use)
Check proper section of Operator's Manual for fluid specifications

Maintenance Check Item ➧	Daily Maintenance Check For Week Of _____						
	MON	TUES	WED	THURS	FRI	SAT	SUN
✓ Safety Interlock Operation							
✓ Brake Operation							
✓ Engine Oil & Fuel Level							
✓ Cooling System Fluid Level							
Drain Water/Fuel Separator							
✓ Air Filter Restriction Indicator							
✓ Radiator and Screen for Debris							
✓ Unusual Engine Noises[1]							
✓ Unusual Operating Noises							
✓ Transmission Oil Level							
✓ Hydraulic System Oil Level							
✓ Hydraulic Filter Indicator[2]							
✓ Hydraulic Hoses for Damage							
✓ Fluid Leaks							
✓ Tire Pressure							
✓ Instrument Operations							
✓ Reel–to–Bedknife Adjustment							
✓ Height–of–Cut Adjustment							
Lubricate All Grease Fittings[3]							
Touch–up Damaged Paint							

[1] = Check glow plugs and injector nozzles, if excess smoke or rough running is noted.
[2] = Check with engine running and oil at operating temperature.
[3] = Immediately after every washing, regardless of the interval listed.

Notation for areas of concern: Inspection performed by_____

Item	Date	Information
1		
2		
3		
4		
5		
6		
7		
8		

AIR CLEANER MAINTENANCE

CAUTION

Before servicing or making adjustments to the machine, stop engine and remove key from the switch. Lower cutting units to the ground.

GENERAL AIR CLEANER MAINTENANCE

1. Check air cleaner body for damage which could possibly cause an air leak. Replace a damaged air cleaner body.

2. Service the air cleaner filters when ever air cleaner indicator (Fig. 39) shows red or every 400 hours (more frequently in extreme dusty or dirty conditions). Do not over service air filter.

3. Be sure cover is sealing around air cleaner body.

SERVICING PRECLEANER BOWL (Fig. 39)

Normally, inspect precleaner bowl daily. When conditions are extremely dusty and dirty, inspect more frequently. Do not let dust or debris build up above level marks on precleaner bowl.

1. Remove thumb screw, separate cover from precleaner bowl.

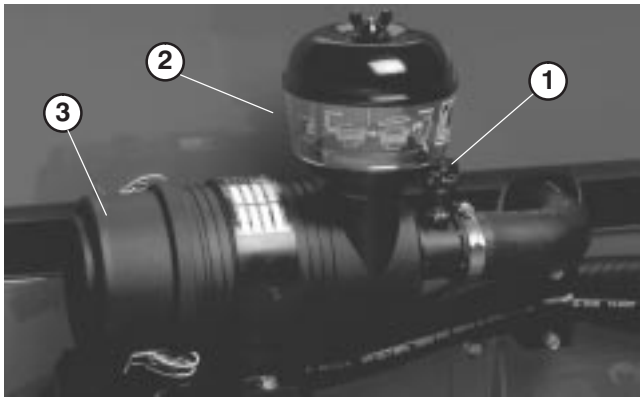

Figure 39
1. Air Cleaner Indicator
2. Pre Cleaner Bowl
3. Dust Cup

2. Empty precleaner bowl and wipe clean.

3. Assemble and install precleaner bowl, cover and thumb screw.

Note: When operating machine in extremely dusty conditions, an optional extension tube (Toro Part No. 43-3810), which raises precleaner bowl above hood, thus, lengthening the time between precleaner bowl servicing, is available from your local authorized Toro Distributor.

SERVICING AIR CLEANER (Fig. 40)

1. Release latches securing air cleaner cover to air cleaner body. Separate cover from body. Clean inside of air cleaner cover.

2. Gently slide filter element out of air cleaner body to reduce the amount of dust dislodged. Avoid knocking filter against air cleaner body.

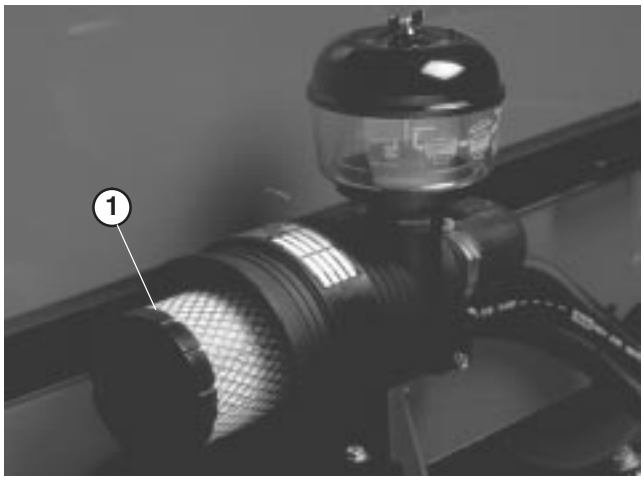

Figure 40
1. Filter Element

3. Inspect filter element and discard if damaged. Do not wash or reuse a damaged filter.

Washing Method

A. Prepare a solution of filter cleaner and water and soak filter element about 15 minutes. Refer to directions on filter cleaner carton for complete information.

B. After soaking filter for 15 minutes, rinse it with clear water. Maximum water pressure must not exceed 40 psi to prevent damage to the filter element. Rinse filter from clean side to dirty to side.

C. Dry filter element using warm, flowing air (160°F) max), or allow element to air—dry. Do not use a light bulb to dry the filter element because damage could result.

Compressed Air Method

A. Blow compressed air from inside to the outside of dry filter element. Do not exceed 40 psi to prevent damage to the element.

B. Keep air hose nozzle at least 2” from filter and move nozzle up and down while rotating the filter element. Inspect for holes and tears by looking through the filter toward a bright light.

5. Inspect new filter for shipping damage. Check sealing end of filter. Do not install a damaged filter.

6. Insert new filter properly into air cleaner body. Make sure filter is sealed properly by applying pressure to outer rim of filter when installing. Do not press on flexible center of filter.

7. Reinstall cover and secure latches.

8. Reset indicator (Fig. 39) if showing red.

ENGINE MAINTENANCE

CAUTION

Before servicing or making adjustments to the machine, stop engine and remove key from the switch. Lower cutting units to the ground.

ENGINE OIL AND FILTER (Fig. 41 & 42)

Change oil and filter initially after the first 50 hours of operation, thereafter change oil every 50 hours and filter every 100 hours.

1. Remove drain plug and let oil flow into drain pan. When oil stops, install drain plug.

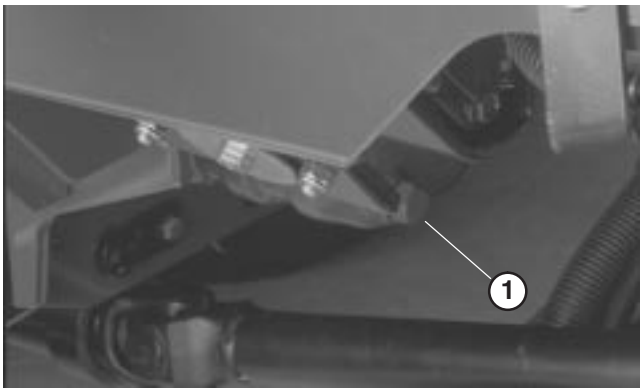

Figure 41
1. Engine Oil Drain Plug

2. Remove oil filter. Apply a light coat of clean oil to the new filter seal before screwing it on. DO NOT OVER−TIGHTEN.



Figure 42
1. Engine Oil Filter

3. Add oil to crankcase, refer to Check Engine Oil.

FUEL SYSTEM

Fuel Tank

Drain and clean fuel tank every 2 years. Also, drain and clean tank if fuel system becomes contaminated or if machine is to be stored for an extended period. Use clean fuel to flush out the tank.

Fuel Lines and Connections

Check lines and connections every 400 hours or yearly, whichever comes first. Inspect for deterioration, damage, or loose connections.

Fuel Filter / Water Separator

Drain water or other contaminants from fuel filter / water separator (Fig. 43) daily.

1. Locate fuel filter, under hood, and place a clean container under it.

2. Loosen drain plug on bottom of filter canister. Tighten plug after draining.

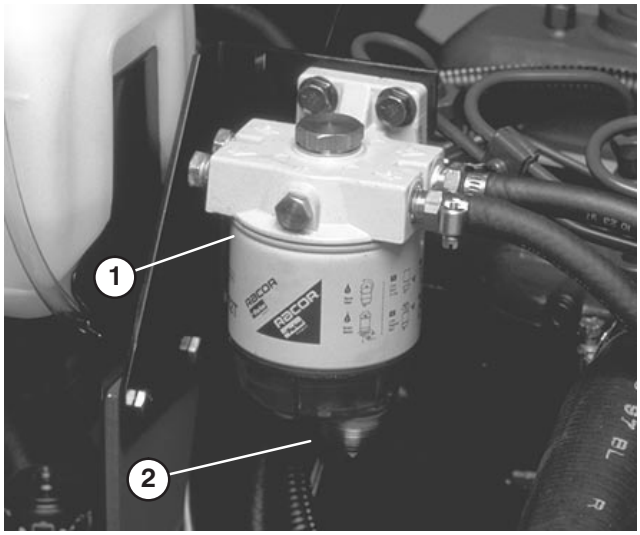

Figure 43
1. Fuel Filter / Water Separator
2. Drain Plug

Replace filter canister after every 400 hours of operation.

1. Clean area where filter canister mounts.

2. Remove filter canister and clean mounting surface.

3. Lubricate gasket on filter canister with clean oil.

4. Install filter canister by hand until gasket contacts mounting surface, then rotate an additional 1/2 turn.

REPLACING FUEL PRE FILTER (Fig. 44)

Replace the fuel pre filter after every 400 operating hours or yearly, whichever occurs first.

1. Remove screw securing filter to frame rail.

2. Clamp both fuel lines that connect to the fuel filter so fuel cannot drain when lines are removed.

3. Loosen the hose clamps at both ends of the filter and pull fuel lines off filter.

4. Slide hose clamps onto ends of fuel lines. Push fuel lines onto fuel filter and secure them with hose clamps. Be sure arrow on side of filter points toward the injection pump.

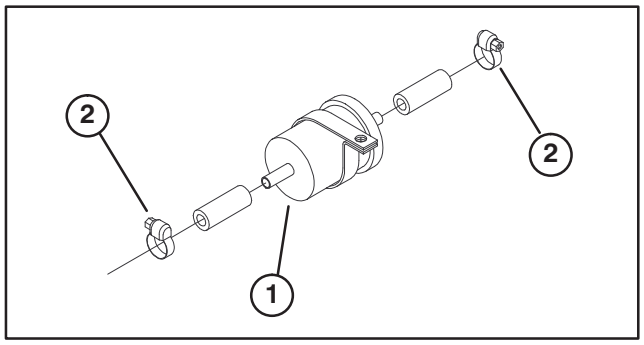

Figure 44

1. Fuel filter
2. Hose clamps

BLEEDING AIR FROM INJECTORS (Fig. 45)

Note: This procedure should be used only if fuel system has been purged of air through normal priming procedures and engine will not start; refer to Bleeding Fuel System.

1. Loosen the pipe connection to the No. 1 nozzle and holder assembly.

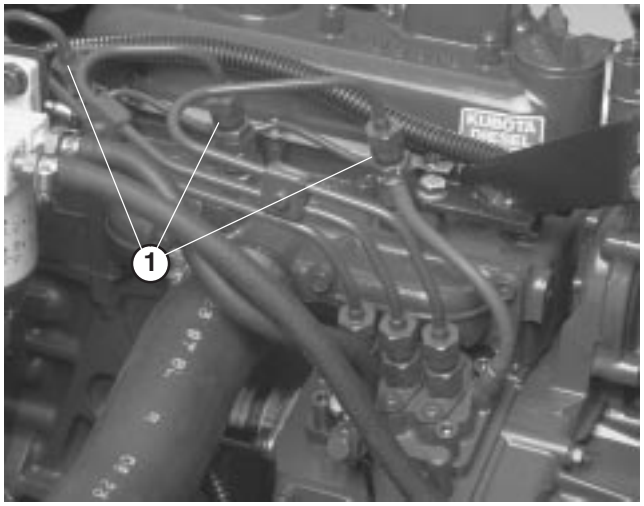

Figure 45
1. Fuel Injectors (3)

2. Move throttle to FAST position.

3. Turn key in key switch to START position and watch fuel flow around connector. Engine will crank. Turn key to OFF position when solid flow is observed.

4. Tighten pipe connector securely.

5. Repeat steps on remaining nozzles.

ENGINE COOLING SYSTEM (Fig. 46 & 47)

1. Removing Debris – Remove debris from screen, oil coolers and radiator daily, clean more frequently in dirty conditions.

A. Turn engine off and raise hood. Clean engine area thoroughly of all debris.

B. Loosen clamps and pull up on screen to slide it out of mounting tracks. Clean screen thoroughly with water or compressed air.

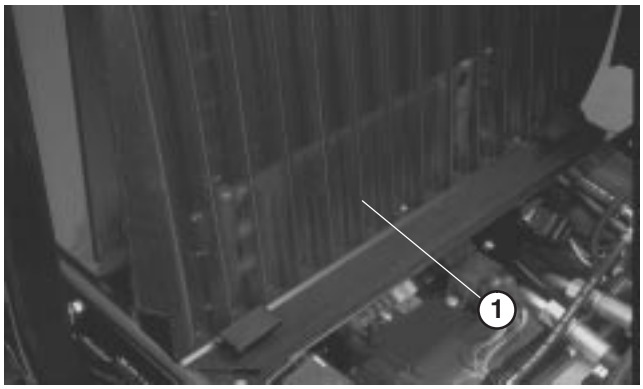

Figure 46
1. Screen

C. Slightly raise oil coolers and pivot forward. Clean both sides of oil coolers and radiator area thoroughly with compressed air. Pivot oil coolers back into position.

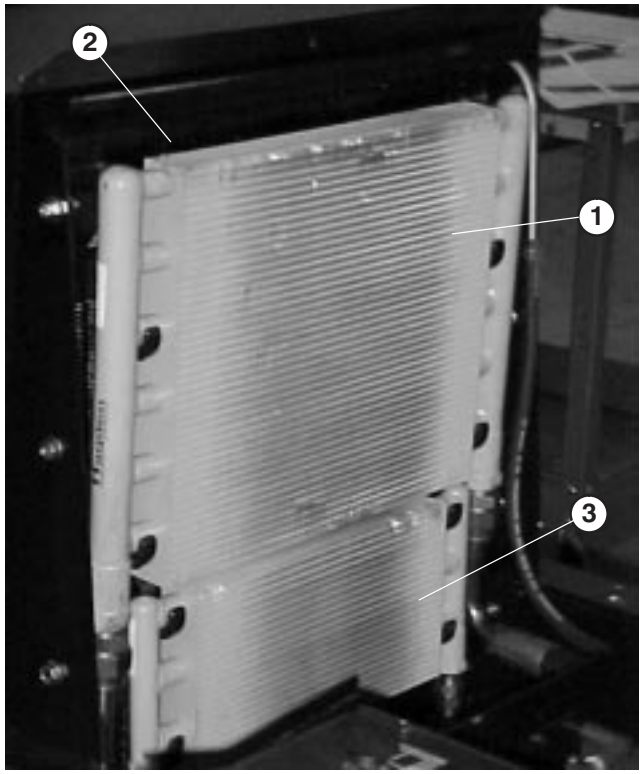

Figure 47
1. Reel Oil Cooler
2. Radiator
3. Transmission Oil Cooler

D. Install screen and close hood.

ENGINE MAINTENANCE

SERVICING ENGINE BELTS

Check condition and tension of all belts after first day of operation and every 100 operating hours thereafter.

Alternator Belt (Fig. 48)

To Check Tension:

1. Open hood.

2. Check tension by depressing belt midway between alternator and crankshaft pulleys with 22 lb. of force. Belt should deflect 7/16 in. If deflection is incorrect, proceed to step 3. If correct, continue operation.

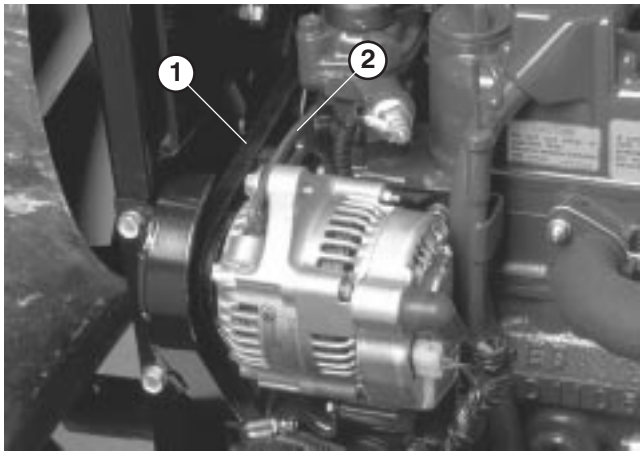

Figure 48
1. Alternator Belt
2. Brace

3. Loosen bolt securing brace to engine and bolt securing alternator to brace.

4. Insert pry bar between alternator and engine and pry out on alternator.

5. When proper tension is achieved, tighten alternator and brace bolts to secure adjustment.

Cooling Fan Belt (Fig. 49)

1. Loosen lock nut on belt tensioner lever.

2. Apply 5—10 lb. of force at end of lever to set the proper tension on the fan belt.

3. Tighten lock nut to secure adjustment.

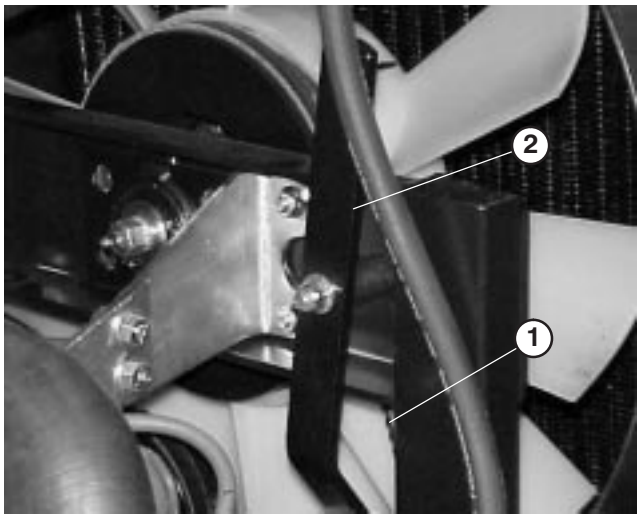

Figure 49
1. Cooling Fan Belt 2. Tensioner Lever

ADJUSTING THROTTLE (Fig. 50)

1. Position throttle lever forward so it stops against seat base slot.

2. Loosen the throttle cable connector on the lever arm at the injection pump.

3. Hold the injection pump lever arm against the high idle stop and tighten the cable connector.

Note: When tightened, the cable connector must be free to swivel.

4. Torque the lock nut, used to set the friction device on the throttle lever, to 40—55 in-lb. The maximum force required to operate the throttle lever should be 20 lb.



Figure 50
1. Injection Pump Lever Arm

HYDRAULIC MAINTENANCE

CAUTION

Before servicing or making adjustments to the machine, stop engine and remove key from the switch. Lower cutting units to the ground.

CHANGING HYDRAULIC FLUID (Fig. 51)

Change hydraulic fluid after every 800 operating hours, in normal conditions. If fluid becomes contaminated, contact your local TORO distributor because the system must be flushed. Contaminated fluid looks milky or black when compared to clean oil.

1. Turn engine off and set parking brake.

2. Remove drain plug from bottom of reservoir and let hydraulic fluid flow into drain pan. Reinstall and tighten plug when hydraulic fluid stops draining.

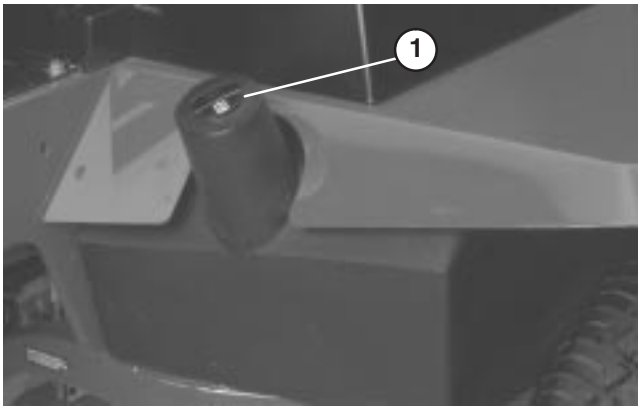

Figure 51
1. Hydraulic Reservoir

3. Fill reservoir with approximately 8.5 gallons of hydraulic fluid. Refer to Checking Hydraulic Fluid.

IMPORTANT: Use only hydraulic fluids specified. Other fluids could cause system damage.

4. Install reservoir cap. Start engine and use all hydraulic controls to distribute hydraulic fluid throughout the system. Also check for leaks. Then stop the engine.

5. Check level of fluid and add enough to raise level to FULL mark on dipstick. DO NOT OVER FILL.

REPLACING HYDRAULIC FILTER (Fig. 52)

The hydraulic system filter head is equipped with a service interval indicator. With the engine running, view the indicator, it should be in the GREEN zone. When the indicator is in the RED zone, the filter element should be changed.

Use the Toro replacement filter (Part No. 94-2621).

IMPORTANT: Use of any other filter may void the warranty on some components.

1. Position machine on a level surface, lower the cutting units, stop the engine, engage the parking brakes and remove key from ignition switch.

2. Clean area around filter mounting area. Place drain pan under filter and remove filter.

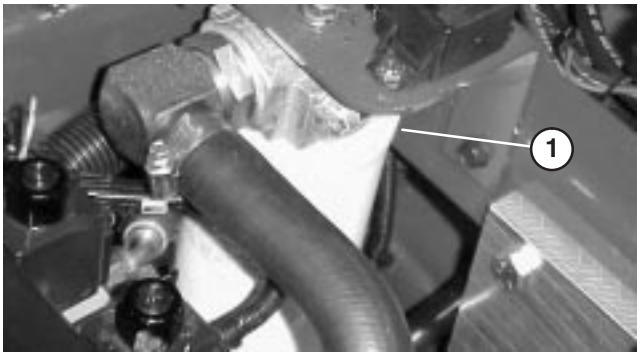

Figure 52
1. Hydraulic Filter

3. Lubricate new filter gasket and fill the filter with hydraulic fluid.

4. Assure filter mounting area is clean. Screw filter on until gasket contacts mounting plate. Then tighten filter one—half turn.

5. Start engine and let run for about two minutes to purge air from the system. Stop the engine and check for leaks.

CHECKING HYDRAULIC LINES AND HOSES

Daily, check hydraulic lines and hoses for leaks, kinked lines, loose mounting supports, wear, loose fittings, weather deterioration and chemical deterioration. Make all necessary repairs before operating.

WARNING

Keep body and hands away from pin hole leaks or nozzles that eject high pressure hydraulic fluid. Use cardboard or paper to find hydraulic leaks. Hydraulic fluid escaping under pressure can penetrate skin and cause injury. Fluid accidentally injected into the skin must be surgically removed within a few hours by a doctor familiar with this form of injury or gangrene may result.

HYDRAULIC SYSTEM TEST PORTS (Fig. 53)

The test ports are used to test pressure in the hydraulic circuits. Contact your local Toro distributor for assistance.

1. Test Port #1 is used to assist in trouble shooting the hydraulic circuit for the front cutting units and lift cylinders.



Figure 53

1. Test Port #1
2. Test Port #2
3. Test Port #3 & #4 (Not Shown)

2. Test Port #2 is used to assist in trouble shooting the hydraulic circuit for the rear cutting units.

3. Test Port #3 is located on the rear of the hydrostatic transmission and is used to measure the charge pressure of the transmission.

4. Test Port #4 is located on the rear of the lift block and is used to assist in trouble shooting the hydraulic lift circuit.

ADJUSTING TRACTION DRIVE FOR NEUTRAL (Fig. 54)

The machine must not creep when traction pedal is released. If it does creep, an adjustment is required.

1. Park machine on a level surface, shut engine off and lower cutting units to the floor. Depress only the right brake pedal and engage the parking brake.

2. Jack up left side of machine until front tire is off the shop floor. Support machine with jack stands to prevent it from falling accidentally.

NOTE: On 4 wheel drive models, left rear tire must also be off the shop floor or 4 wheel drive driveshaft must be removed.

3. Under right side of machine, loosen locknut on traction adjustment cam.

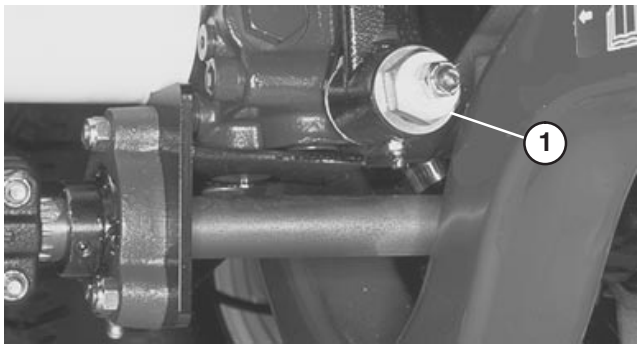

Figure 54

1. Traction Adjustment Cam

WARNING

Engine must be running so final adjustment of the traction adjustment cam can be performed. To guard against possible personal injury, keep hands, feet, face and other parts of the body away from the muffler, other hot parts of the engine, and other rotating parts.

4. Start engine and rotate cam hex in either direction until wheel ceases rotation.

5. Tighten locknut securing adjustment.

6. Stop the engine and release the right brake. Remove jack stands and lower the machine to the shop floor. Test drive the machine to make sure it does not creep.

ADJUSTING CUTTING UNIT DROP RATE (Fig. 55–57)

The cutting unit lift circuit is equipped with (3) adjustable valves used to ensure the cutting units do not drop too quickly and damage the turf. Adjust cutting units as follows:

Center Cutting Unit

1. Locate valve behind access panel above operator's platform (Fig. 55).

2. Loosen setscrew on valve and rotate valve approximately 1/2 turn clockwise.

3. Verify drop rate adjustment by raising and lowering cutting unit several times. Readjust as required.

4. After desired drop rate is attained, tighten setscrew to lock adjustment.

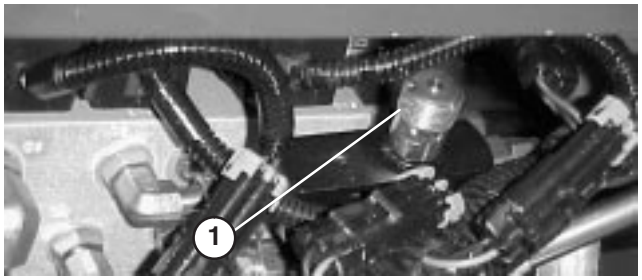

Figure 55

1. Center cutting unit adjustment valve

Outside Front Cutting Units

1. Locate valve on right side of lift block (Fig. 56).

2. Loosen setscrew on valve. Rotate valve 1/2 turn clockwise.

3. Verify drop rate adjustment by raising and lowering cutting units several times. Readjust as required.

4. After desired drop rate is attained, tighten set screw to lock adjustment.

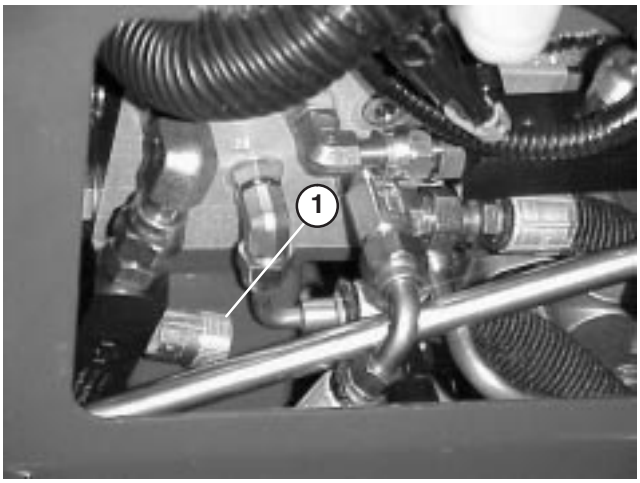

Figure 56

1. Outside front cutting units adjustment valve

Rear Cutting Units

1. Raise hood and locate valve in center of machine behind engine (Fig. 57).

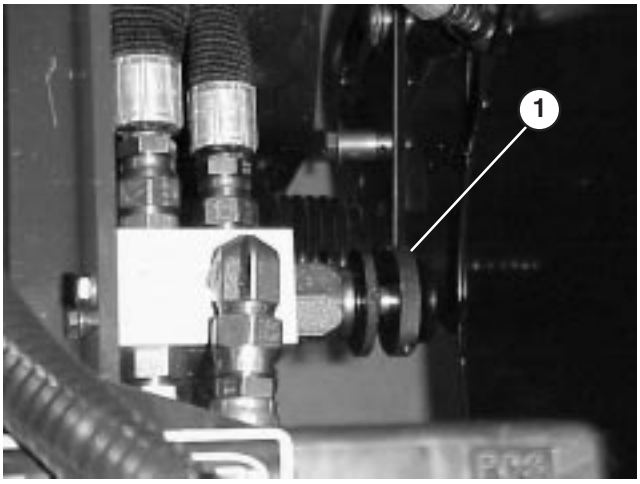

Figure 57

1. Rear cutting units adjustment valve

2. Loosen locking ring on valve and rotate valve approximately 1/2 turn clockwise.

3. Verify drop rate adjustment by raising and lowering cutting units several times. Readjust as required.

4. After desired drop rate is attained, tighten locking ring to lock adjustment.

CHECKING AND ADJUSTING TRACTION LINKAGE (Fig. 58)

Due to normal wear in the control linkage and hydrostatic transmission, an increased amount of force may be required to return the transmission to neutral. Periodically check the machine.

To Check Traction Linkage

1. On a large, flat open area, drive the machine at full throttle and full traction speed.

2. Remove foot from traction pedal and measure the distance required for the machine to come to a stop.

3. If the distance required to stop is greater than 18 feet (5.5 meters) an adjustment to the traction linkage is required. Proceed to next step.

To Adjust Traction Linkage

1. Park machine on a level surface, lower cutting units to the floor and shut engine off.

2. Connect brake pedals together with locking pin, push both pedals down and pull parking brake latch out.

3. Loosen outer hex nut securing eye bolt to spring anchor plate.

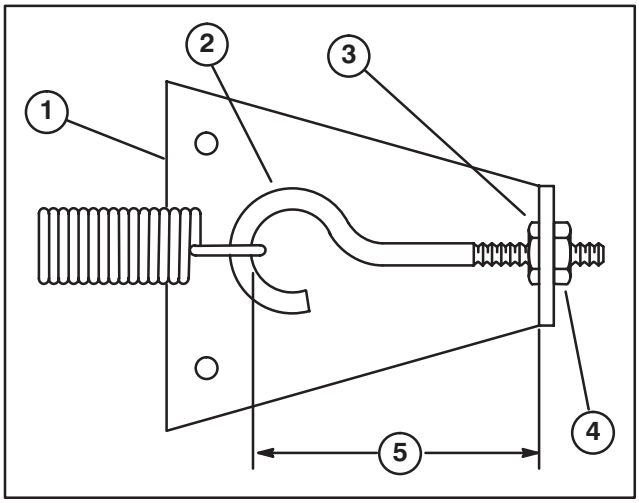

Figure 58

1. Spring Anchor Plate
2. Eye bolt
3. Inner locknut
4. Outer locknut
5. Shorten distance to decrease time required to stop machine

4. Rotate, clockwise, until distance between inside of eye bolt loop and inside of spring anchor plate is shortened 1/8″, as shown in figure 58. Tighten hex nut.

5. Operate the machine and check stopping distance. Repeat procedure if required.

Note: Shortening the distance between inside of eye bolt loop and inside of spring anchor plate increases the pedal force on the traction pedal. Therefore, do not over adjust.

HYDRAULIC SCHEMATIC

DISPLACEMENT, FLOW RATE, AND PRESSURE CHART					
	DISPLACEMENT		PRESSURE		FLOW RATE *
COMPONENT	in^3/rev	cm^3/rev	lbs/in^2	BARS	GPM / LPM
P1	.66	10.8			8.4 / 31.8
P2	.66	10.8			8.4 / 31.8
P3	.37	6			4.7 / 17.8
P4	1.5	25			19.1 / 72.3
P5	.58	9.5			7.4 / 28
M1	1.16	19			
M2	1.16	19			
M3	1.16	19			
M4	1.16	19			
M5	1.16	19			
M6	1.51	25			
V1	6.1	100			
R1			3000	207	
R2			3000	138	
R3			1450	100	
R4			3625	250	
R5			150	10	
R6			70	5	
R7			70	5	
R8			3625	250	
R9			1500	103	
R10			50	3	

* FLOW RATE CALCULATED AT 3000 RPM AND 98% EFFICIENCY.

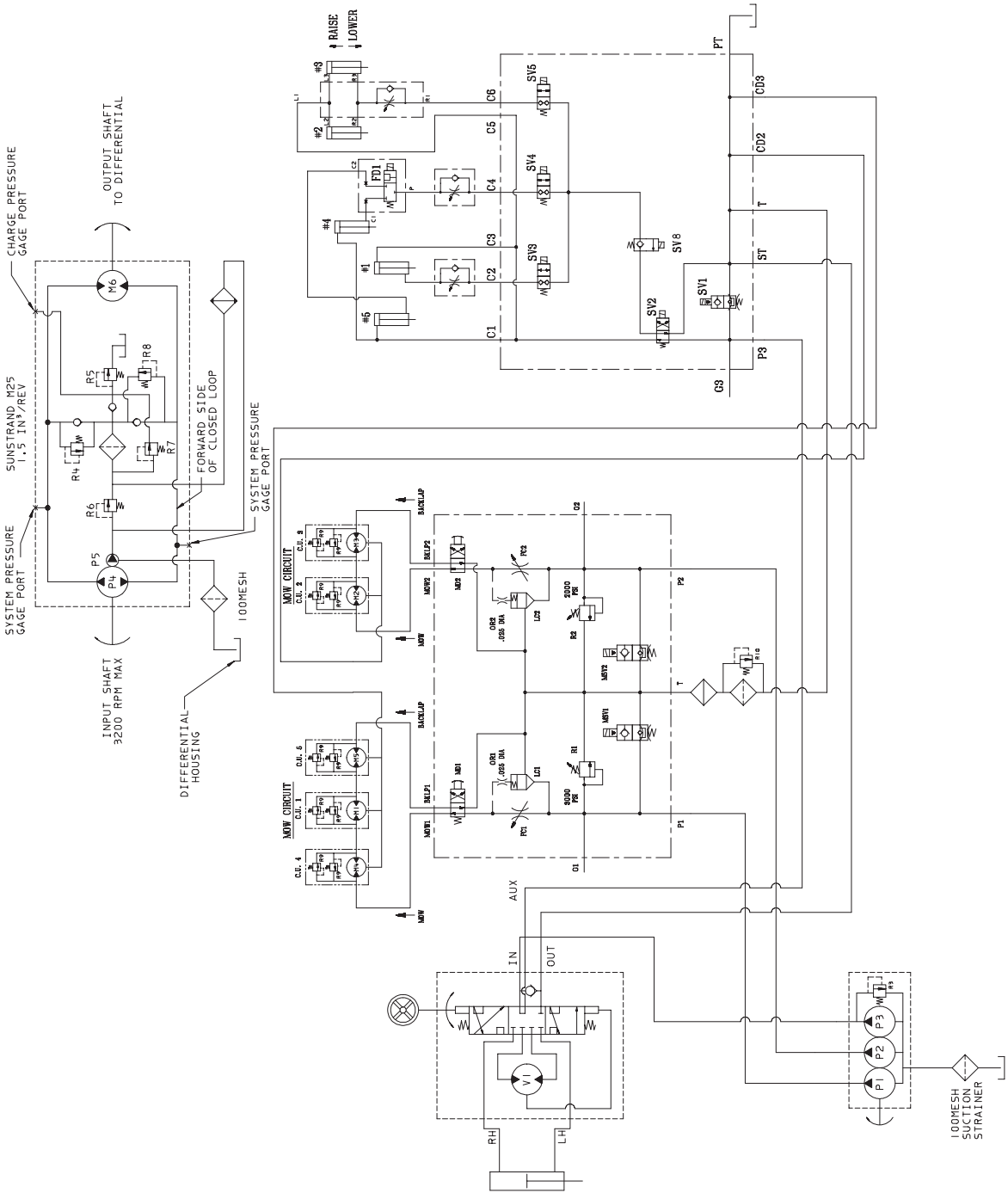

BRAKE MAINTENANCE

CAUTION

Before servicing or making adjustments to the machine, stop engine and remove key from the switch. Lower cutting units to the ground.

ADJUSTING SERVICE BRAKES (Fig. 59)

Adjust the service brakes when there is more than 1 inch of "free travel" of the brake pedal, or when the brakes do not work effectively. Free travel is the distance the brake pedal moves before braking resistance is felt.

1. Disengage locking pin from brake pedals so both pedals work independently of each other.

2. To reduce free travel of brake pedals, tighten the brakes — loosen front nut on threaded end of brake cable. Then tighten rear nut to move cable backward until brake pedals have 1/2 to 1 inch of free travel. Tighten front nuts after brakes are adjusted correctly.

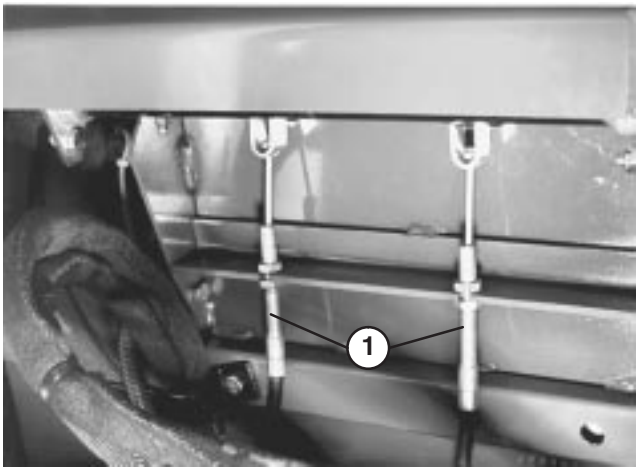

Figure 59

1. Brake Cables

AXLE MAINTENANCE

CAUTION

Before servicing or making adjustments to the machine, stop engine and remove key from the switch. Lower cutting units to the ground.

CHANGING TRANSMISSION FLUID (Fig. 60)

Change the transmission fluid after every 800 hours of operation, in normal conditions.

1. Position machine on a level surface, lower the cutting units, stop the engine, engage the parking brakes and remove key from ignition switch.

2. Clean area around suction line on bottom of transmission. Place drain pan under line.

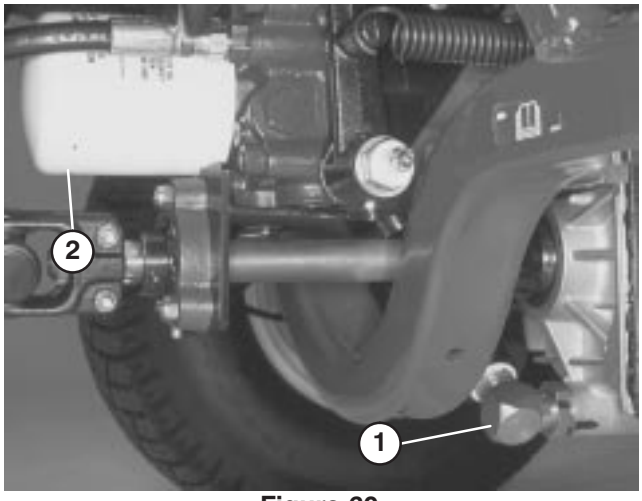

Figure 60

1. Transmission Suction Line
2. Transmission Oil Filter

AXLE MAINTENANCE

3. Remove line from transmission allowing fluid to drain into drain pan.

4. Reinstall suction line to transmission.

5. Fill with oil; refer to Check Transmission Fluid.

6. Before starting the engine after changing transmission fluid, disconnect the run (ETR) solenoid on the engine, and crank the engine several times for 15 seconds. This allows the charge pump to fill the transmission with fluid before the engine is started.

REPLACING TRANSMISSION FILTER (Fig. 60)

Change the transmission filter after the **first 10 hours** of operation and every 800 hours, thereafter.

Only the Toro replacement filter (Part No.75-1330) can be used in the hydraulic system.

IMPORTANT: Use of any other filter may void the warranty on some components.

1. Position machine on a level surface, lower the cutting units, stop the engine, engage the parking brakes and remove key from ignition switch.

2. Clean area around filter mounting area. Place drain pan under filter and remove filter.

3. Lubricate new filter gasket and fill the filter with hydraulic oil.

4. Assure filter mounting area is clean. Screw filter on until gasket contacts mounting plate. Then tighten filter one−half turn.

5. Start engine and let run for about two minutes to purge air from the system. Stop the engine and check for leaks. Check fluid level and replenish if necessary.

CHANGING REAR AXLE LUBRICANT (Fig. 61 & 17) (Model 03551 only)

After every 800 hours of operation the oil in the rear axle must be changed.

1. Position machine on a level surface.

2. Clean area around the drain plugs.

3. Remove plug allowing oil to drain into drain pans.

4. After oil is drained, apply thread locking compound on drain plug threads and reinstall in axle.

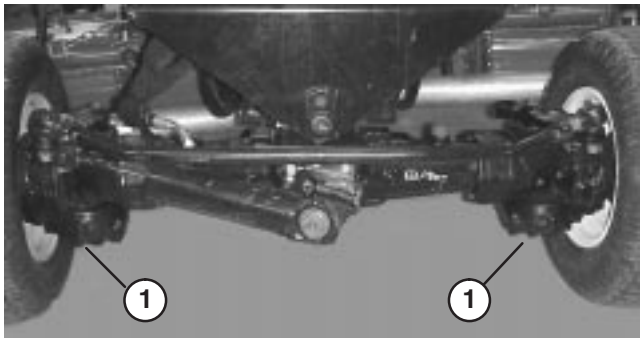

Figure 61
1. Drain Plugs

5. Fill axle with lubricant; refer to Check Rear Axle Lubricant, page 17.

REAR WHEEL TOE-IN (Fig. 62)

After every 800 operating hours or annually, check rear wheel toe-in.

1. Measure center-to-center distance (at axle height) at front and rear of steering tires. Front measurement must be within ±1/8 in. of the rear measurement.

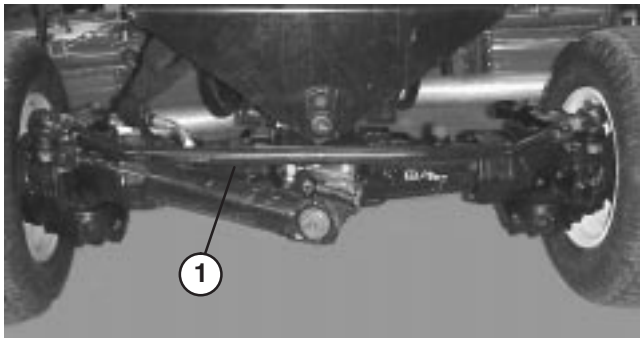

Figure 62
1. Tie Rod

2. To adjust, loosen clamps at both ends of tie rod.

3. Rotate tie rod to move front of tire inward or outward.

4. Tighten tie rod clamps when adjustment is correct.

ELECTRICAL MAINTENANCE

BATTERY CARE

IMPORTANT: Before welding on the machine, disconnect both cables from the battery, disconnect both wire harness plugs from the electronic control unit and the terminal connector from the alternator to prevent damage to the electrical system.

CAUTION

Wear safety goggles and rubber gloves when working with electrolyte. Charge the battery in a well ventilated so gases produced while charging can dissipate. Since the gases are explosive, keep open flame and electrical spark away from the battery; do not smoke. Nausea may result if the gases are inhaled. Unplug charger from electrical outlet before connecting to, or disconnecting charger leads from battery posts.

Note: Check battery condition weekly or after every 50 hours of operation. Keep terminals and entire battery case clean because a dirty battery will discharge slowly. To clean the battery, wash the entire case with solution of baking soda and water. Rinse with clear water. Coat the battery posts and cable connectors with Grafo 112X (skin—over) grease (Toro Part No. 505-47) or petroleum jelly to prevent corrosion.

FUSES (Fig. 63)

There are 6 fuses in the machines electrical system. They are located below control panel.



Figure 63

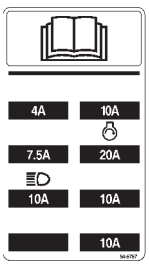

ADJUSTING PARKING BRAKE SWITCH

The parking brake uses a proximity sensor located under the cover of the steering tower. This sensor is adjusted so the sensor locates a flag on the latch rod when the parking brake is released.

Using the Ace Diagnostic tool verify the brake sensor opens and closes properly. The parking brake light on the Diagnostic tool should be on when engaged and off when disengaged. If the light remains on when the parking brake is released the engine will stop when the traction system is engaged. Should this condition exist adjust the sensor using the Diagnostic tool to verify its operation.

The adjustment is accomplished by moving the sensor within its slotted hole. The position of the flag on the latch rod is over the sensor target area when the parking brake is released. Ensure that in the engaged position the flag moves away from the target zone of the sensor.

OPTIONAL LIGHTING

IMPORTANT: If optional lighting is be added to the traction unit, use the following schematic and part numbers to prevent damage to the traction units electrical system.

SCHEMATIC FOR OPTIONAL LIGHTING

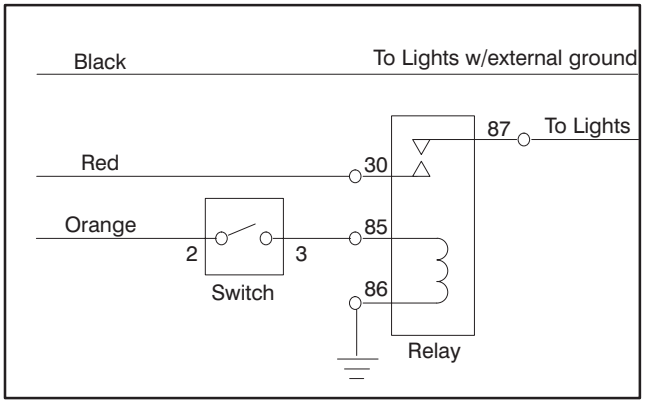

Switch*
Toro Part No. 75-1010
Honeywell Part No. 1TL1-2

Relay
Toro Part No. 70-1480
Bosch Part No. 0-332-204

Black, red and orange wires are located in control console

Add 10 Amp fuse to fuse block at location shown

*** Punch out in control panel provided for switch installation**

Note: Make sure a good ground is achieved to prevent damage to traction unit.

ELECTRICAL SCHEMATIC

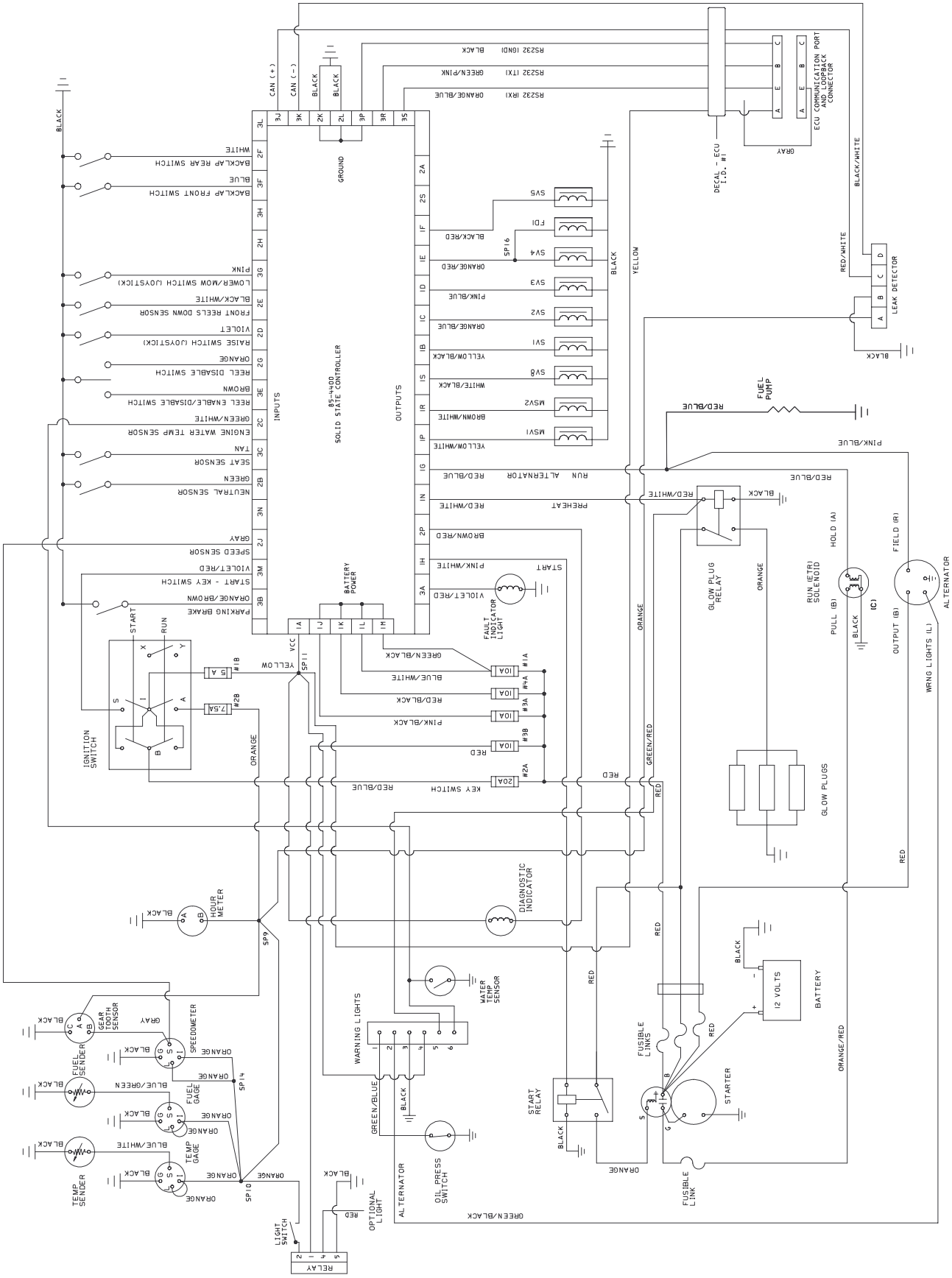

CUTTING UNIT MAINTENANCE

BACKLAPPING

DANGER

POTENTIAL HAZARD
- **Reels may stall when backlapping.**

WHAT CAN HAPPEN
- **Reels may restart. Contact with rotating reels will cause serious injury.**

HOW TO AVOID THE HAZARD
- **Do not attempt to restart reels by hand or touch reels while backlapping.**
- **Stop engine and turn height-of-cut knob one position toward "1."**

Note: When backlapping, the front units all operate together, and the rear units operate together.

1. Position the machine on a level surface, lower the cutting units, stop the engine, engage the parking brake, and move the Enable/Disable switch to disable position.

2. Unlock and raise the seat to expose controls.

3. Locate the reel speed selector knobs and backlap knobs (Fig. 64). Rotate the desired backlap knob(s) to the backlap position and the desired reel speed selector knob(s) to position "1."

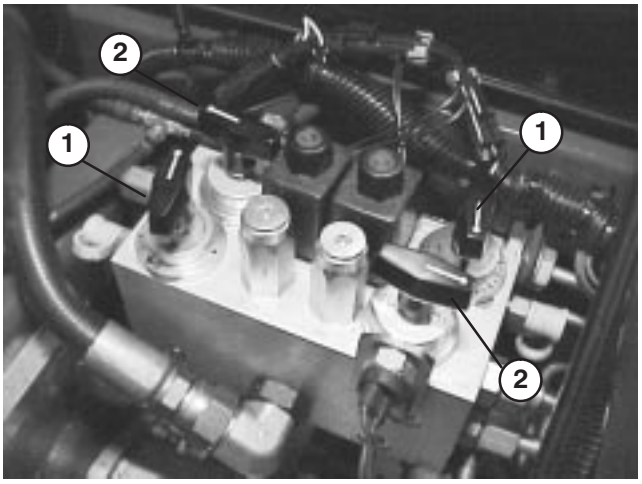

Figure 64

1. **Reel speed selector knobs**
2. **Backlap knobs**

Note: Backlapping speed may be increased by moving the reel speed selector knob toward "13." Each position will increase speed approximately 100 rpm. After changing selector, wait 30 seconds for the system to stabilize at the new speed.

4. Make initial reel to bedknife adjustments appropriate for backlapping on all cutting units which are to be backlapped.

5. Start engine and run at **idle speed**.

DANGER

POTENTIAL HAZARD
- **Changing engine speed while backlapping may cause reels to stall.**

WHAT CAN HAPPEN
- **Reels may restart. Contact with rotating reels will cause serious injury.**

HOW TO AVOID THE HAZARD
- **Never place hands or feet in reel area while engine is running.**
- **Never change engine speed while backlapping.**
- **Only backlap at idle engine speed.**
- **Never attempt to turn reels by hand or foot while engine is running.**

6. Select either front, rear, or both backlap knobs to determine which reels will be backlapped.

7. Move Enable/Disable switch to Enable position. Move Lower Mow/Lift control forward to start backlapping operation on designated reels.

8. Apply lapping compound with a long handle brush (Toro Part No. 29-9100). Never use a short handled brush (Fig. 65).

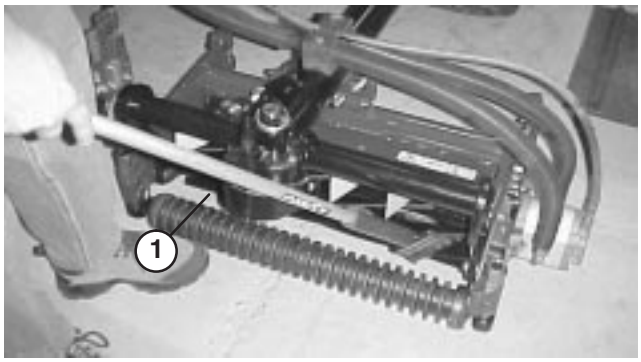

Figure 65

1. **Long handle brush**

9. If reels stall or become erratic while backlapping, stop backlapping by moving the Lower Mow/Lift control lever rearward. Once the reels have stopped, move the desired reel speed selector knob(s) one position closer to "13." Resume backlapping by moving the Lower Mow/Lift control lever forward.

10. To make an adjustment to the cutting units while backlapping, turn reels OFF by moving the Lower Mow/Raise lever rearward; move the Enable/Disable switch to Disable and turn the engine OFF. After adjustments have been completed, repeat steps 5–9.

11. Backlap until the reels can cut paper.

12. When the cuttig unit is adequately sharpened, a burr will form on the front edge of the knife. Using a file, carefully remove the burr without dulling the cutting edge (Fig. 66).

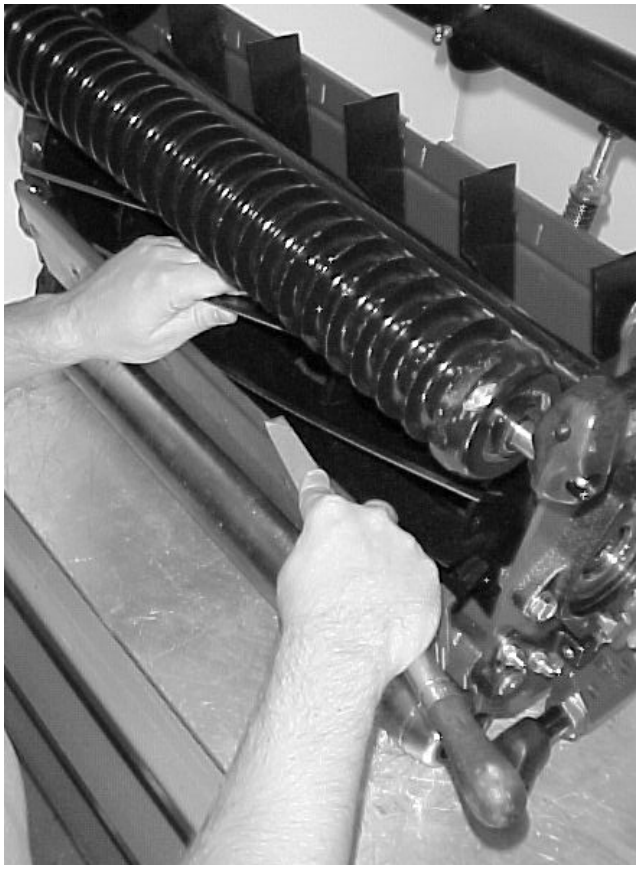

Figure 66

13. Repeat procedure for all cutting units to be backlapped.

When backlap operation has been completed, return the backlap knobs to the forward flow position, lower seat and wash all lapping compound off cutting units. Adjust cutting unit reel to bedknife as needed.

Note: If the backlap knobs are not returned to the forward flow position after backlapping, the cutting units will not raise or function properly.

MAINTENANCE SCHEDULE

Minimum Recommended Maintenance Intervals

Maintenance Procedure	Maintenance Interval & Service				
	Every 50hrs	Every 100hrs	Every 200hrs	Every 400hrs	Every 800hrs
Check Battery Fluid Level					
Check Battery Cable Connections					
Lubricate All Grease Fittings					
Change Engine Oil					
Inspect Air Filter, Dust Cup and Baffle					
† Check Fan and Alternator Belt Tension					
‡ Replace Engine Oil Filter					
Inspect Cooling System Hoses					
Drain Moisture—Hyd. Tank					
Drain Moisture—Fuel Tank					
Check Reel Bearing Preload					
† Torque Wheel Lug Nuts					
◔ Service Air Cleaner					
Replace Fuel/Water Separator Filter					
Replace Fuel Filter					
Inspect Traction Linkage Movement					
‡ Torque Head and Adjust Valves					
‡ Check Engine RPM (idle and full throttle)					
Change Hydraulic Fluid					
† Change Transmission Fluid					
† Replace Transmission Filter					
Check Rear Wheel Toe—in					
Rear Axle Service					
—Pack Rear Wheel Bearings (2WD)					
—Change Rear Axle Lubricant (4WD)					

† Initial break in at 10 hours

‡ Initial break in at 50 hours

◔ if indicator shows red

Replace Moving Hoses
Replace Safety Switches
Coolant System — Flush/Replace Fluid
Fuel Tank — Drain/Flush
Hydraulic Tank — Drain/Flush

Annual Recommendations:
Items listed are recommended every 1600 hours or 2 years, whichever occurs first.

PREPARATION FOR SEASONAL STORAGE

Traction Unit

1. Thoroughly clean the traction unit, cutting units and the engine.

2. Check the tire pressure. Inflate all traction unit tires to 15—20 psi.

3. Check all fasteners for looseness; tighten as necessary.

4. Grease or oil all grease fittings and pivot points. Wipe up any excess lubricant.

5. Lightly sand and use touch—up paint on painted areas that are scratched, chipped, or rusted. Repair any dents in the metal body.

6. Service the battery and cables as follows:

A. Remove the battery terminals from the battery posts.

B. Clean the battery, terminals, and posts with a wire brush and baking soda solution.

C. Coat the cable terminals and battery posts with Grafo 112X skin—over grease (Toro Part No. 505-47) or petroleum jelly to prevent corrosion.

D. Slowly recharge the battery every 60 days for 24 hours to prevent lead sulfation of the battery.

Engine

1. Drain the engine oil from the oil pan and replace the drain plug.

2. Remove and discard the oil filter. Install a new oil filter.

3. Refill oil pan with 4.0 quarts of SAE10W-30 motor oil.

4. Start the engine and run at idle speed for approximately two minutes.

5. Stop the engine.

6. Thoroughly drain all fuel from the fuel tank, lines and the fuel filter/water separator assembly.

7. Flush the fuel tank with fresh, clean diesel fuel.

8. Re—secure all fuel system fittings.

9. Thoroughly clean and service the air cleaner assembly.

10. Seal the air cleaner inlet and the exhaust outlet with weatherproof tape.

11. Check anti—freeze protection and add as needed for expected minimum temperature in your area.

IDENTIFICATION AND ORDERING

MODEL AND SERIAL NUMBER

The model and serial number is on a plate that is mounted on the left side of frame above footrest. Use model and serial number in all correspondence and when ordering parts.

To order replacement parts from an authorized TORO Distributor, supply the following information:

1. Model and serial numbers of the machine.

2. Part number, description and quantity of parts desired.

Note: Do not order by reference number if a parts catalog is being used; use the part number.

NOTES

NOTES

NOTES

The Toro General Commercial Products Warranty

A Two-Year Limited Warranty

Conditions and Products Covered

The Toro Company and its affiliate, Toro Warranty Company, pursuant to an agreement between them, jointly warrant your 1996 or newer Toro Commercial Product ("Product") purchased after January 1, 1997, to be free from defects in materials or workmanship for two years or 1500 operational hours*, whichever occurs first. Where a warrantable condition exists, we will repair the Product at no cost to you including diagnosis, labor, parts, and transportation. This warranty begins on the date the Product is delivered to the original retail purchaser.

* Product equipped with hour meter

Instructions for Obtaining Warranty Service

You are responsible for notifying the Commercial Products Distributor or Authorized Commercial Products Dealer from whom you purchased the Product as soon as you believe a warrantable condition exists.

If you need help locating a Commercial Products Distributor or Authorized Dealer, or if you have questions regarding your warranty rights or responsibilities, you may contact us at:

Toro Commercial Products Service Department
Toro Warranty Company
8111 Lyndale Avenue South
Bloomington, MN 55420-1196
952-888-8801 or 800-982-2740
E-mail: commercial.service@toro.com

Owner Responsibilities

As the Product owner, you are responsible for required maintenance and adjustments stated in your operator's manual. Failure to perform required maintenance and adjustments can be grounds for disallowing a warranty claim.

Items and Conditions Not Covered

Not all product failures or malfunctions that occur during the warranty period are defects in materials or workmanship. This express warranty does not cover the following:

- Product failures which result from the use of non-Toro replacement parts, or from installation and use of add-on, modified, or unapproved accessories
- Product failures which result from failure to perform required maintenance and/or adjustments
- Product failures which result from operating the Product in an abusive, negligent or reckless manner
- Parts subject to consumption through use unless found to be defective. Examples of parts which are consumed, or used up, during normal Product operation include, but are not limited to, blades, reels, bedknives, tines, spark plugs, castor wheels, tires, filters, belts, etc.
- Failures caused by outside influence. Items considered to be outside influence include, but are not limited to, weather, storage practices, contamination, use of unapproved coolants, lubricants, additives, or chemicals, etc.
- Normal "wear and tear" items. Normal "wear and tear" includes, but is not limited to, damage to seats due to wear or abrasion, worn painted surfaces, scratched decals or windows, etc.

Parts

Parts scheduled for replacement as required maintenance are warranted for the period of time up to the scheduled replacement time for that part.

Parts replaced under this warranty become the property of Toro. Toro will make the final decision whether to repair any existing part or assembly or replace it. Toro may use factory remanufactured parts rather than new parts for some warranty repairs.

General Conditions

Repair by an Authorized Toro Distributor or Dealer is your sole remedy under this warranty.

Neither The Toro Company nor Toro Warranty Company is liable for indirect, incidental or consequential damages in connection with the use of the Toro Products covered by this warranty, including any cost or expense of providing substitute equipment or service during reasonable periods of malfunction or non-use pending completion of repairs under this warranty. Except for the Emissions warranty referenced below, if applicable, there is no other express warranty. All implied warranties of merchantability and fitness for use are limited to the duration of this express warranty.

Some states do not allow exclusions of incidental or consequential damages, or limitations on how long an implied warranty lasts, so the above exclusions and limitations may not apply to you.

This warranty gives you specific legal rights, and you may also have other rights which vary from state to state.

Note regarding engine warranty: The Emissions Control System on your Product may be covered by a separate warranty meeting requirements established by the U.S. Environmental Protection Agency (EPA) and/or the California Air Resources Board (CARB). The hour limitations set forth above do not apply to the Emissions Control System Warranty. Refer to the Engine Emission Control Warranty Statement printed in your operator's manual or contained in the engine manufacturer's documentation for details.

Countries Other than the United States or Canada

Customers who have purchased Toro products exported from the United States or Canada should contact their Toro Distributor (Dealer) to obtain guarantee policies for your country, province, or state. If for any reason you are dissatisfied with your Distributor's service or have difficulty obtaining guarantee information, contact the Toro importer. If all other remedies fail, you may contact us at Toro Warranty Company.

Part No. 374-0031 Rev. –