Form No. 3456-477 Rev A

TORO®

Count on it.

Parts Catalog

eRecycler eS52VST 52cm

Lawn Mower Flex-Force Power System™

Model No. 21853T—Serial No. 400000000 and Up

Register at www.Toro.com.
Original Instructions (EN)

CE

3456-477 A

Ordering Replacement Parts

To order replacement parts, please supply the part number, the quantity, and the description of each part desired.

Understanding Reference Numbers

Each identified part in an illustration has a reference number. The reference number for a part also appears in the parts list, along with other information about the part.

This catalog uses two special reference number formats, one to indicate parts in a service assembly and another to indicate the quantity of a given part in an illustration.

Service Assembly Reference Numbers

Parts in service assemblies have reference numbers in the form a:b. The a represents the reference number of the entire service assembly and the b represents a sequential number unique to each part within the service assembly.

For example, a wheel assembly might be identified by reference number 6, the tire by 6:1, the valve by 6:2, and the wheel by 6:3. When you order the assembly identified by reference number 6, you receive all parts identified by reference numbers 6:1,6:2, and 6:3. However, you may also order any part individually. Reference numbers of this type appear in illustration and in parts lists.

Reference Numbers Indicating Quantity

In an illustration, if a reference number indicates more than one part, the reference number has the form nX y. The n represents the quantity of the part, the X is the multiplication symbol, and the y represents the reference number.

For example, in an illustration, the reference number 2X 37 means that two of the parts identified by reference number 37 are indicated.

Contents

Housing Assembly 4
Grass Bag and Frame Assembly 6
Motor Module and Blade Assembly 8
Lower Shroud Assembly No. 140-4213 10
Motor Module Assembly No. 139-1680 Upper Shroud Assembly 12
Front Wheel and Height-of-Cut Assembly 14
Rear Wheel and Height-of-Cut Assembly 16
Handle Assembly 18
Starter Switch Assembly 20
Attachments and Accessories 22

© 2025—The Toro® Company
8111 Lyndale Avenue South
Bloomington, MN 55420

Contact us at www.Toro.com.
Printed in the USA.
All Rights Reserved

Housing Assembly

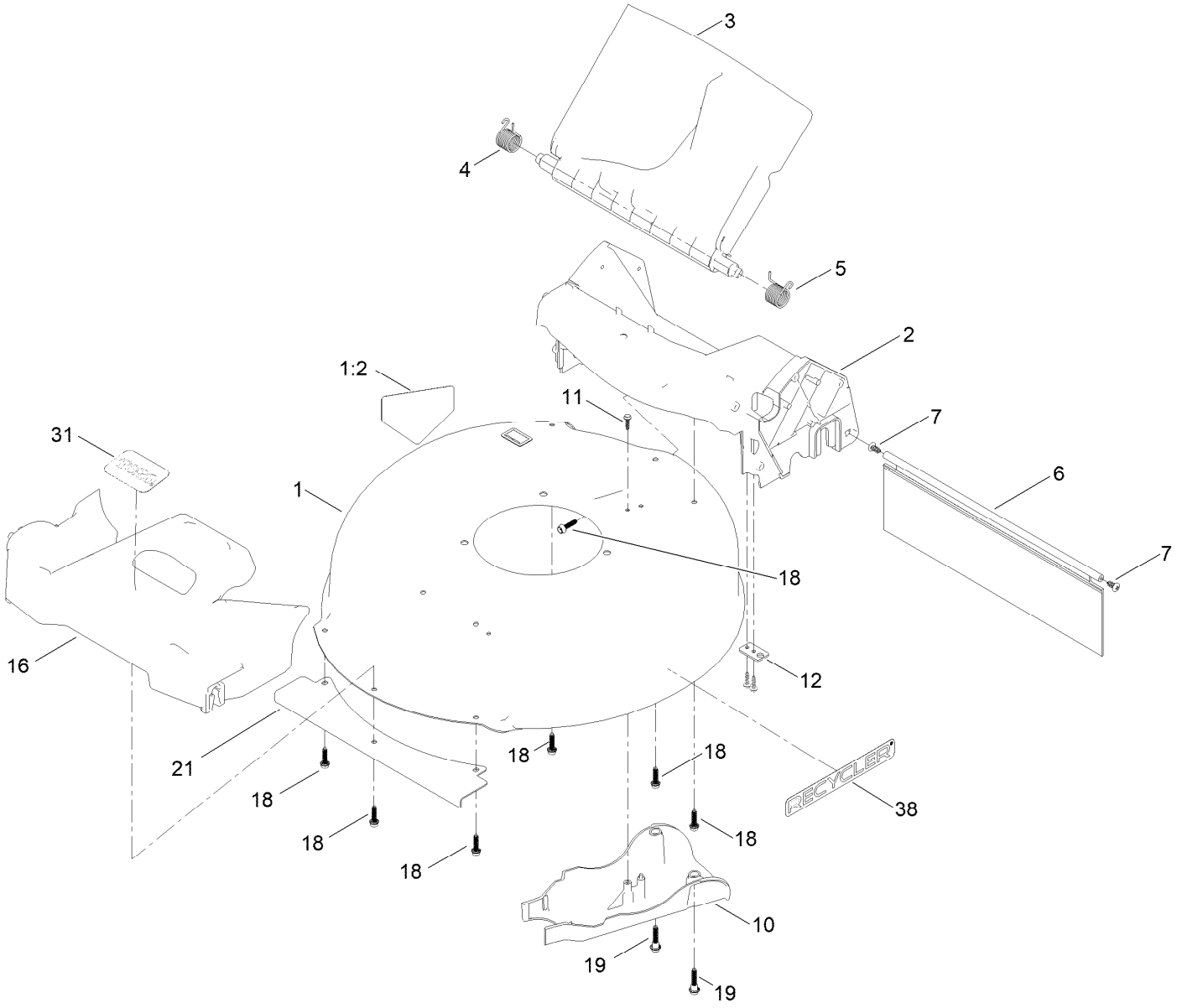

Housing Assembly (continued)

Ref.	Part Number	Qty.	Description
1	145-5525-01	1	Housing-Deck
1:2	112-8760	1	Decal-Danger
2	145-5506	1	Chute-Sp/Awd, 21 In
3	145-5517	1	Deflector-Rear ASM
4	147-0465	1	Spring-Torsion
5	147-0466	1	Spring-Torsion
6	147-0443	1	Shield-Trailing
7	139-1692	2	Screw-PTH
10	127-0723	1	Cover-Belt
11	139-1690	3	Screw-Plastic, HWH
12	127-0730	1	Bracket-Cable
16	145-5518	1	Bumper
18	130-6658	7	Screw-Flange, Plastic
19	131-0837	2	Screw-Shoulder, HHF
21	131-0820-03	1	Shield-Front
31	145-0854	1	Decal-Toro, Silver
38	147-0570	2	Decal-Erecycler

Grass Bag and Frame Assembly

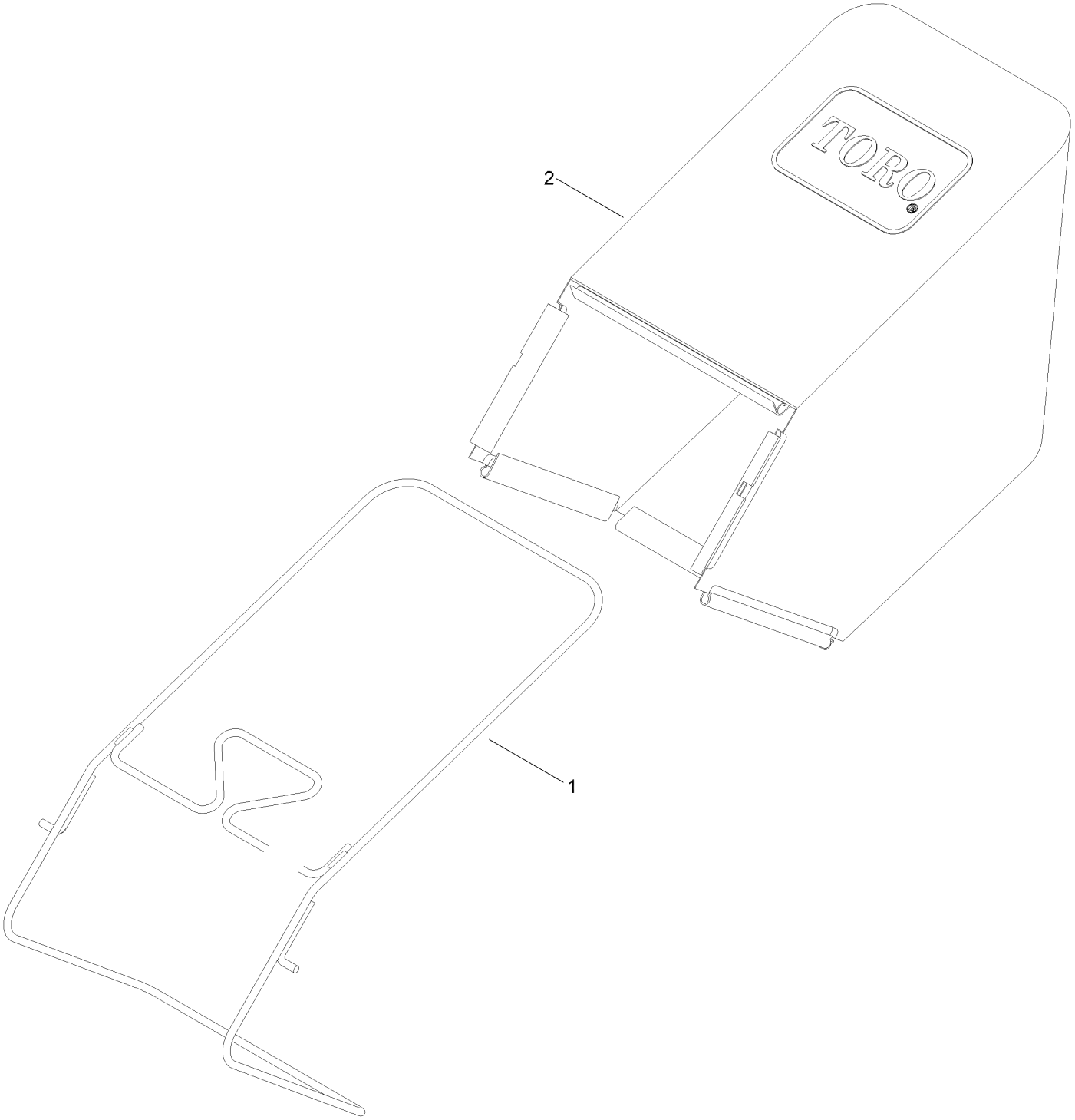

Grass Bag and Frame Assembly (continued)

Ref.	*Part Number*	*Qty.*	*Description*
1	145-5512-03	1	Frame-Bag
2	147-0590	1	Bag ASM

Motor Module and Blade Assembly

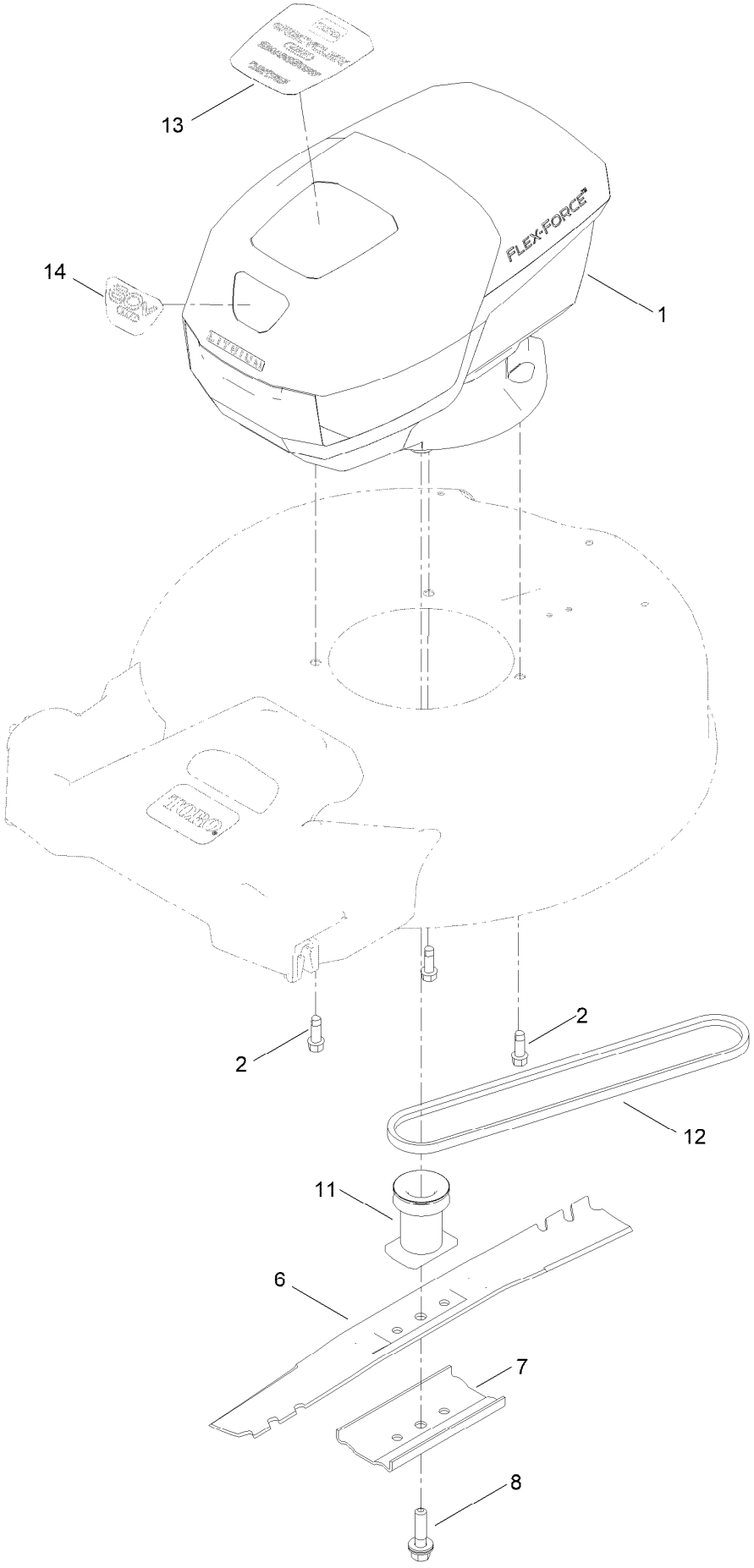

Motor Module and Blade Assembly (continued)

Ref.	Part Number	Qty.	Description
1	140-4213	1	Motor Module
2	95-1726	3	Screw-Taptite
6	140-1274-03	1	Blade-21In (Mulch, Hs)
7	108-3766-03	1	Support-Blade
8	125-2466	1	Bolt-Blade
11	139-1816	1	Driver-Blade
12	115-4669	1	Belt-V
13	147-0567	1	Decal-Es52Vst, Top
14	147-0568	1	Decal - 60V, Front

Lower Shroud Assembly No. 140-4213

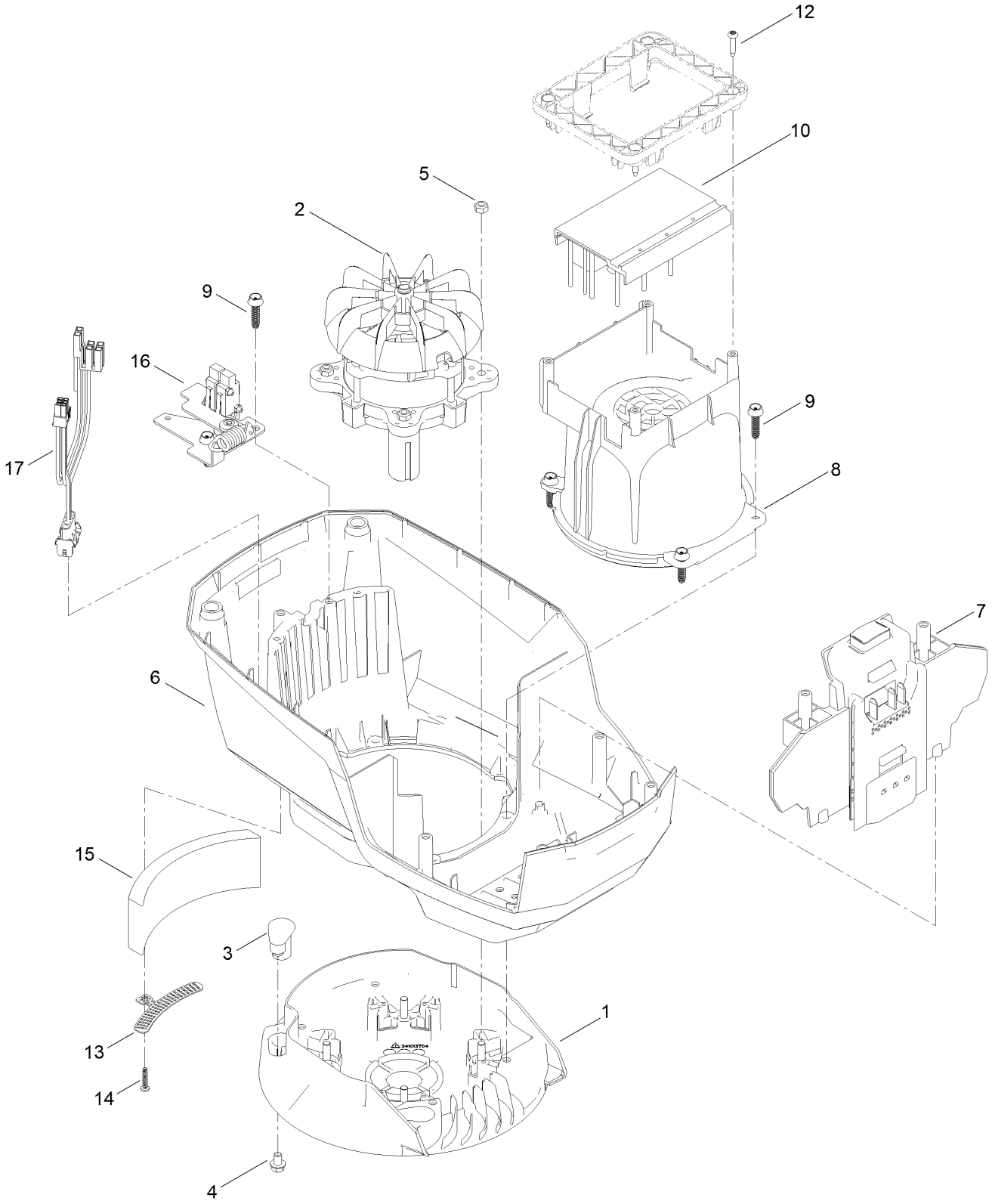

Lower Shroud Assembly No. 140-4213 (continued)

Ref.	Part Number	Qty.	Description
1	139-6628	1	Base-Mount, Motor
2	138-6661	1	Motor, 60 Volt
3	131-9732	3	Insert-Mount, Motor
4	137-4795	3	Screw
5	115-7373	4	Nut-Lock
6	139-6631	1	Shroud-Lower
7	139-6632	1	Battery Reciever ASM
8	139-6633	1	Shroud-Motor
9	130-6658	6	Screw-Flange, Plastic
10	134-5078	1	Controller-Motor, 60V [2-Sp]
12	139-6642	4	Screw
13	139-6635	1	Bracket-Foam
14	138-3273	1	Screw-Plastic, PPH
15	139-6636	1	Foam
16	133-1918	1	Bail Switch ASM
17	139-6637	1	Harness-Wire

Motor Module Assembly No. 139-1680
Upper Shroud Assembly

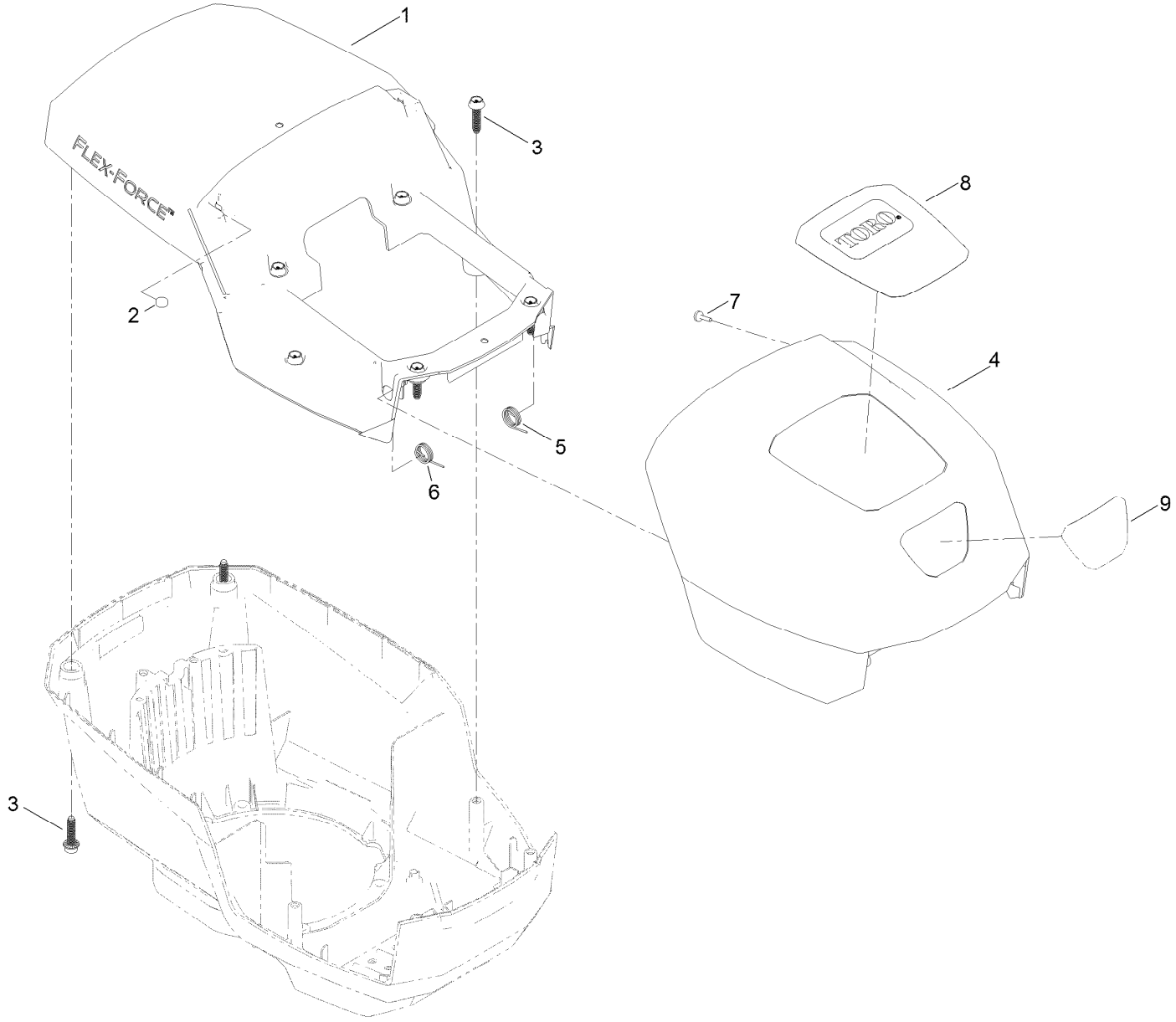

Motor Module Assembly No. 139-1680
Upper Shroud Assembly (continued)

Ref.	Part Number	Qty.	Description
1	139-6638	1	Shroud-Upper
2	114-5896	2	Magnet
3	130-6658	8	Screw-Flange, Plastic
4	139-6639	1	Hood
5	139-6640	1	Spring-LH
6	139-6641	1	Spring-RH
7	95-4234	2	Screw-PPH
8	136-9118	1	Decal-Hood, Top
9	136-9119	1	Decal-Hood, Front

Front Wheel and Height-of-Cut Assembly

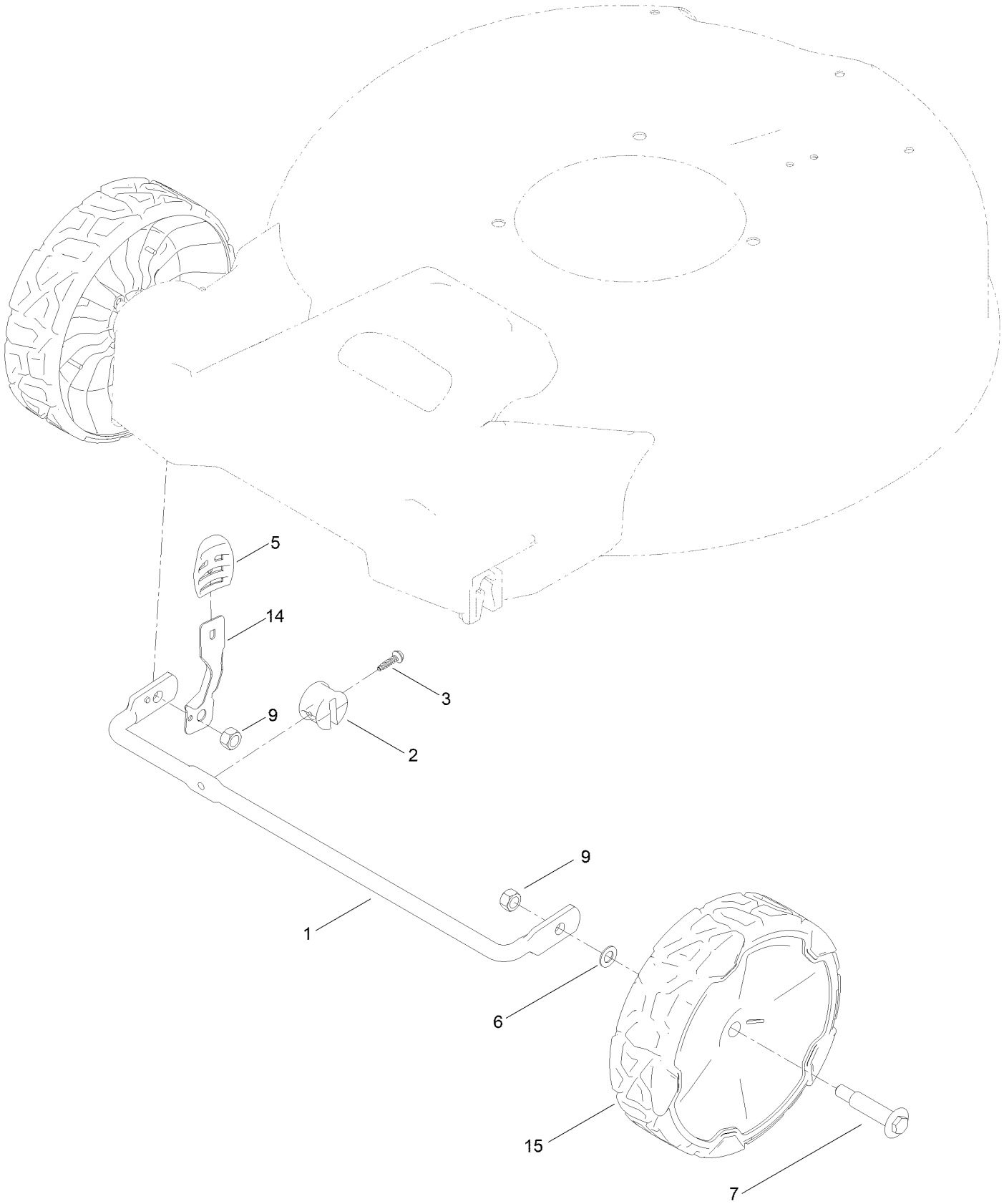

Front Wheel and Height-of-Cut Assembly (continued)

Ref.	Part Number	Qty.	Description
1	127-0668-03	1	Axle-Front
2	127-6800	1	Stop-Axle
3	139-1690	1	Screw-Plastic, HWH
5	105-3042	1	Knob-Lever, HOC
6	139-5449	2	Washer-Wheel Bolt
7	92-1057	2	Bolt-Shoulder
9	121-4600	2	Nut-Hex
14	147-0435	1	Arm-Spring
15	140-2355	2	ASM-8" Wheel, Idler

Rear Wheel and Height-of-Cut Assembly

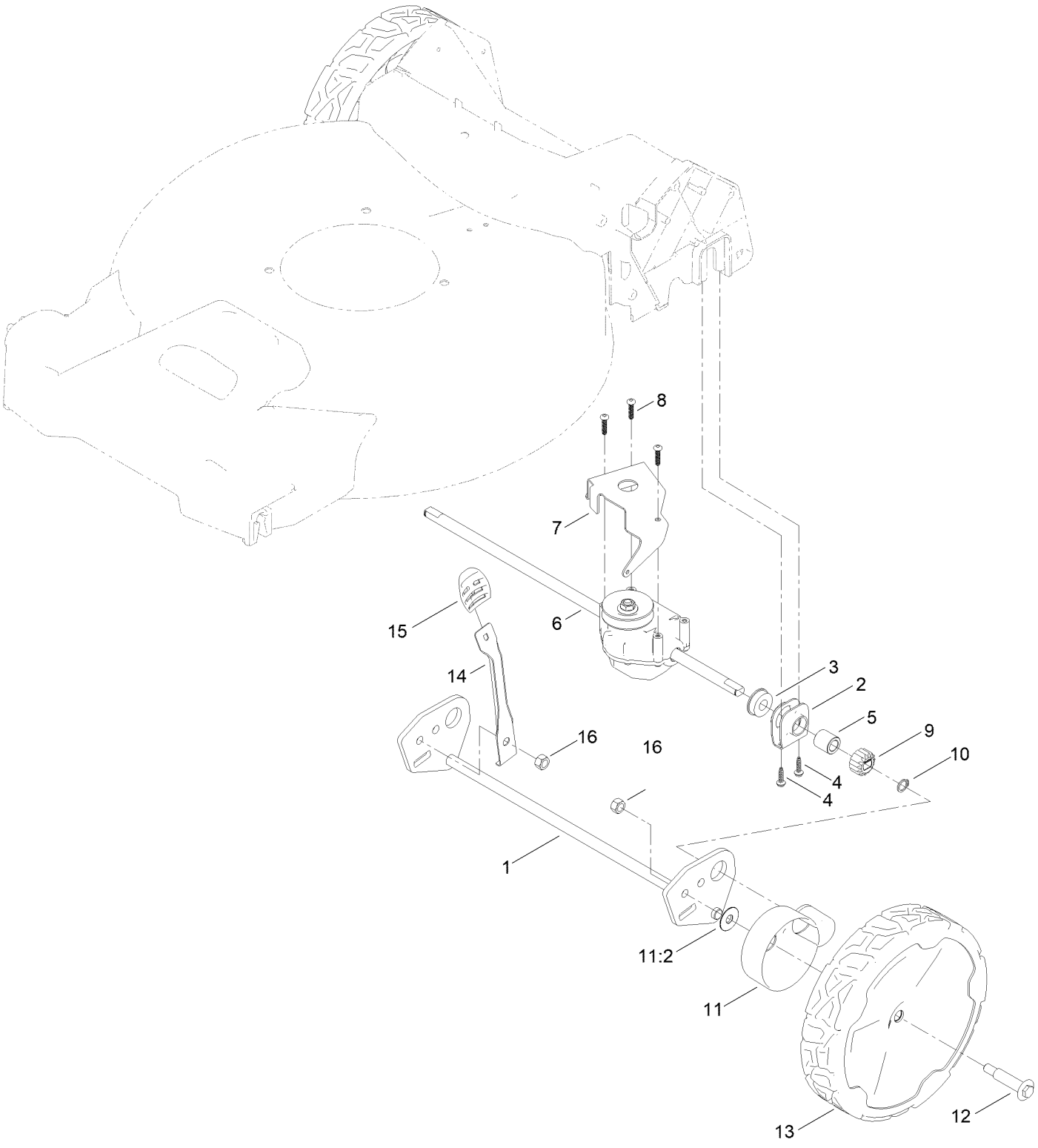

Rear Wheel and Height-of-Cut Assembly (continued)

Ref.	Part Number	Qty.	Description
1	145-5501-03	1	Axle-Rear, Wa
2	138-3234	2	Retainer-Bearing
3	104-8699	2	Bearing-Ball
4	139-1690	4	Screw-Plastic, HWH
5	127-6896	2	Bushing-Sleeve
6	145-5515	1	Transmission (7:1 Ratio)
7	145-5513-03	1	Bracket-Transmission
8	120-9676	3	Screw-Plastite
9	131-5399	2	Gear-Pinion, 15T
10	32151-61	2	Ring-Retaining
11	140-2362	2	ASM-Cover, Gear (Dk Gray)
11:2	614426	1	Washer-Stepped
12	92-1057	2	Bolt-Shoulder
13	140-2350	2	ASM-9.65" Wheel, Geared
14	147-0437	1	Arm-Spring
15	105-3042	1	Knob-Lever, HOC
16	603773	2	Nut-Hex Lock

Handle Assembly

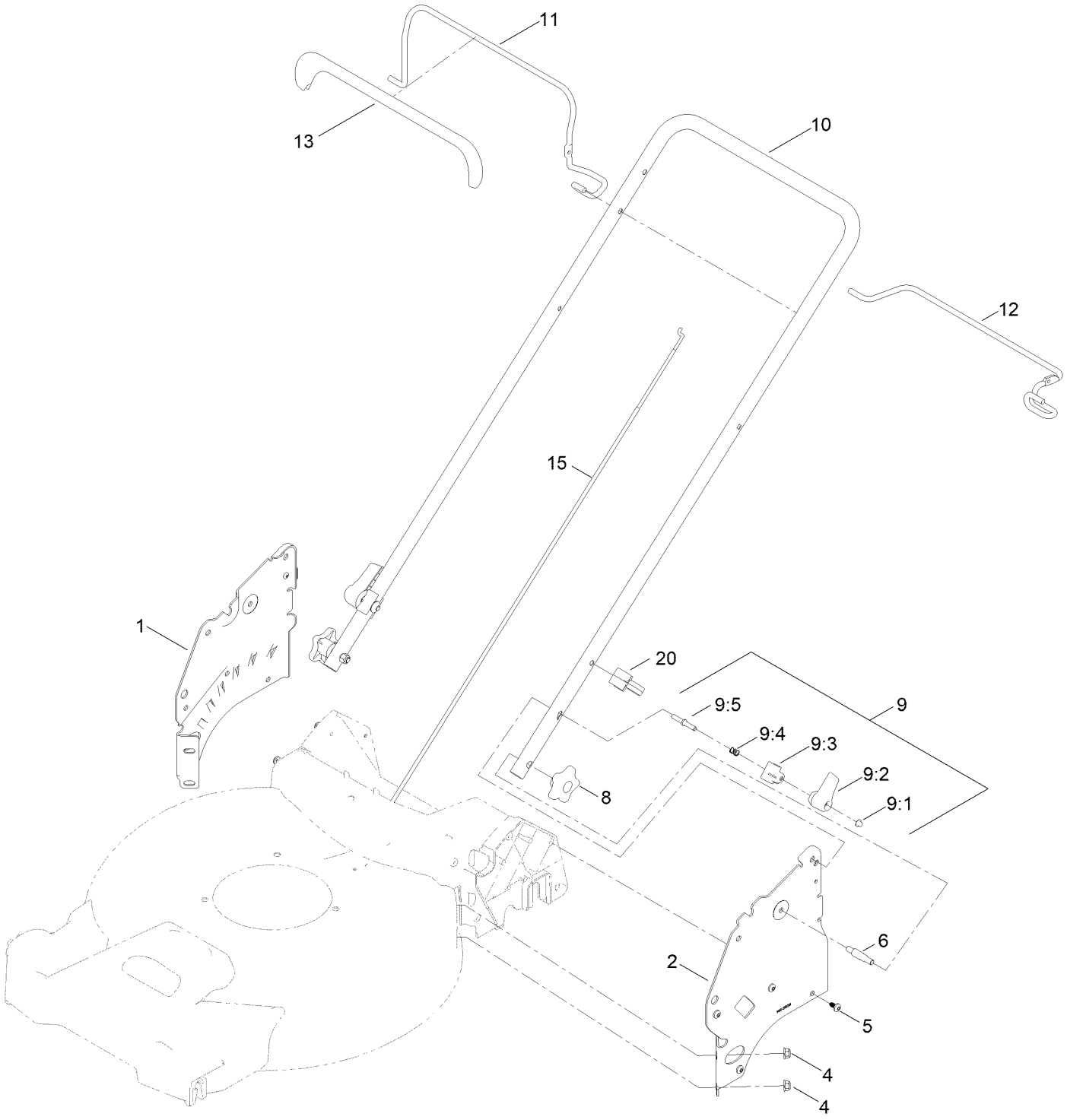

Handle Assembly (continued)

Ref.	Part Number	Qty.	Description
1	145-5507-05	1	Plate-Handle, RH
2	145-5508-05	1	Plate-Handle, LH
4	138-8401	4	Nut-HF
5	139-1679	8	Screw-Plastic,PH
6	139-6588	2	Bolt-Shoulder, Handle
8	117-5976	2	Knob-Handle
9	138-3249	2	Quick Release ASM
9:1	140-4157	1	Nut-Push
9:2	138-3248	1	Lever-Release
9:3	138-3253	1	Anchor-Spring
9:4	115-2858	1	Spring-Compression
9:5	140-4158	1	Rod-Release
10	145-5509-05	1	Handle-Upper
11	138-3270-03	1	Bail-Brake
12	137-4799-03	1	Bail-Traction
13	137-4797	1	Cover-Bail
15	127-0733	1	Cable-Traction
20	114-7988	1	Guide-Cable

Starter Switch Assembly

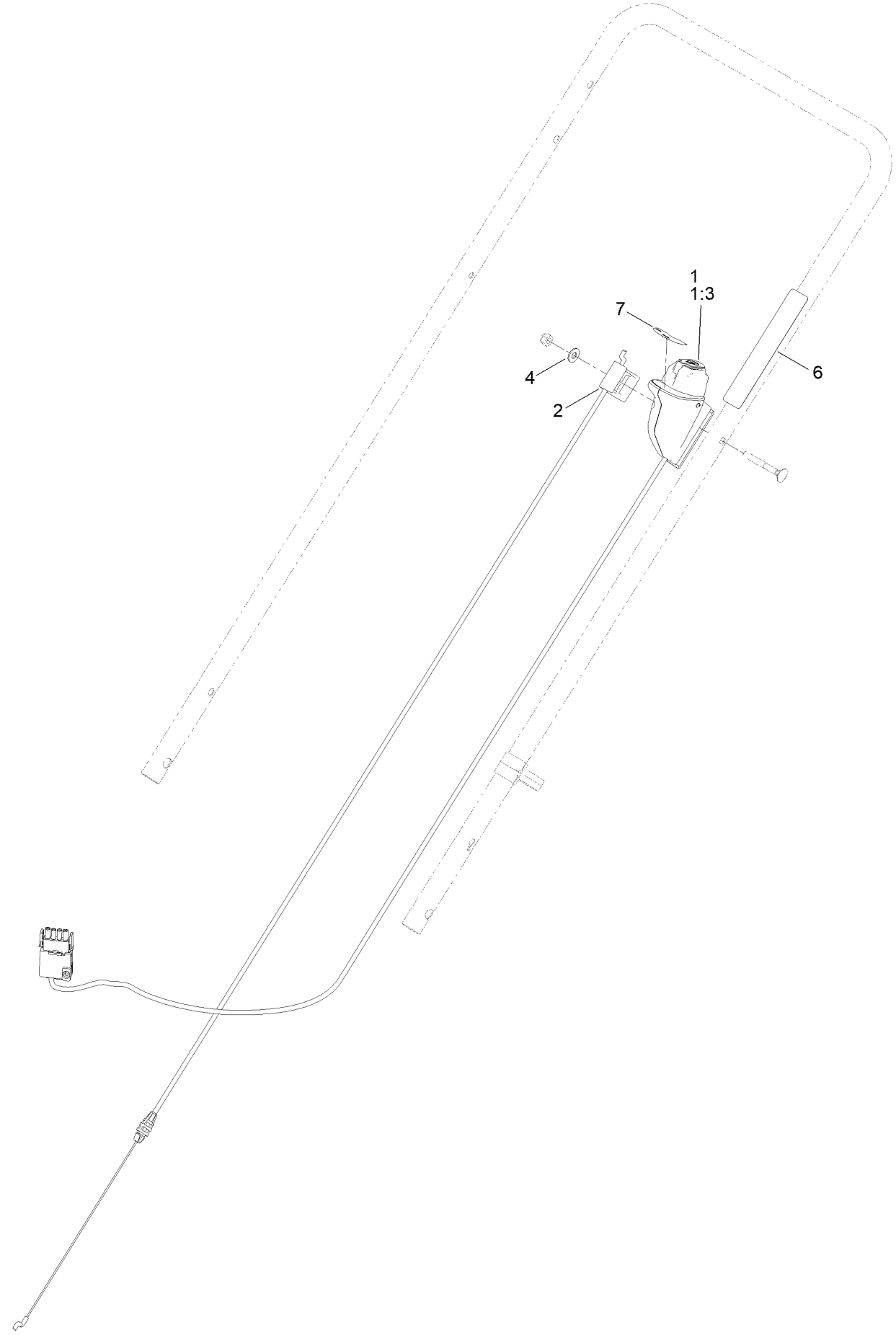

Starter Switch Assembly (continued)

Ref.	Part Number	Qty.	Description
1	140-3800	1	Switch-Starter ASM
1:3	134-5125	1	Starter Button, 2-Sp
2	147-0444	1	Cable - Brake
4	139-1699	1	Washer-Flat
6	144-3175	1	Decal-Controls (60V Start)
7	134-4691	1	Decal - Control Speed

Attachments and Accessories

For 21853T eRecycler eS52VST 52cm Lawn Mower Flex-Force Power System

Product Name	Model/Part
SD Chute Kit	147-0520
60V Battery Charger 2 Amp CE	81802
Smart Stow Walk Power Mower Cover	490-2012
Lawn Striping Kit with 22in Roller	20601
Bag-Walk Behind (Toro)	490-7318
60V 6.0 AH Battery CE	81860
60V 7.5 AH Battery CE	81875
60V Brushless Blower (Bare Tool)	51825T
60V Brushless Trimmer (Bare Tool)	51835T

Notes:



Count on it.