Form No. 3456-753 Rev A

27in Rear Roller Brush Kit

Reelmaster® 3100-D or 7000-D Edge Series Cutting Unit with Universal Groomer

Model No. 03242

Installation Instructions

This product complies with all relevant European directives. For details, please see the Declaration of Incorporation (DOI) at the back of this publication.

Installation

Loose Parts

Use the chart below to verify that all parts have been shipped.

Procedure	Description	Qty.	Use
1	No parts required	–	Determine the position of the roller brushes and reel motors.
2	Roller-brush assembly	1	Install the kit.
	Retaining ring	1	
	Left belt cover/plate assembly	1	
	Grease fitting (90°)	1	
	Bolt (5/16 x 1/2 inch)	2	
	Drive pulley	2	
	Flange-head bolt	1	
	Belt	1	
	Shim washer (as required for belt alignment)	1	
3	High height-of-cut brush (optional)	—	Install the high height-of-cut brush—for HOC greater than 2.5 cm (1 inch).

Note: Determine the left and right sides of the cutting unit from behind the cutting unit.

Important: **Use the Rear Roller Brush Kit only when cutting in the height-of-cut range of 6 to 25 mm (1/4 to 1 inch). Use the High Height of Cut Brush, Part No. 115-0838 (for 27 inch cutting units) when cutting above 2.5 to 5.1 cm (1 to 2 inches). Refer to Installing the High Height of Cut Brush.**

Important: **Install the Universal Groomer Drive Kit before installing the Rear Roller Brush Kit.**

You may use the Rear Roller Brush Kit Model 03242 on the following:

- Reelmaster 3100 Cutting Unit Models 03188, 03189, and 03190
- Reelmaster 7000 Cutting Unit Models 03721 and 03722

© 2022—The Toro® Company
8111 Lyndale Avenue South
Bloomington, MN 55420

Register at www.Toro.com.

Original Instructions (EN)
Printed in the USA
All Rights Reserved

3456-753

1

Determining the Orientation of the Roller Brushes

No Parts Required

Procedure

Use Figure 1 to determine the position of the roller brushes and reel motors for a Reelmaster 3100-D machine and Figure 2 for a Reelmaster 7000-D machine.

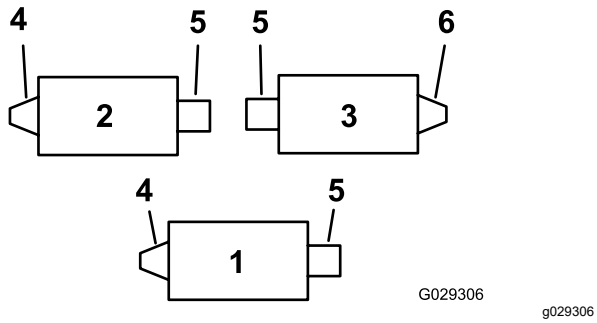

Figure 1

Reelmaster 3100-D

1. #1 cutting unit
2. #2 cutting unit
3. #3 cutting unit
4. Left roller brush drive assembly
5. Reel motor
6. Right roller brush drive assembly

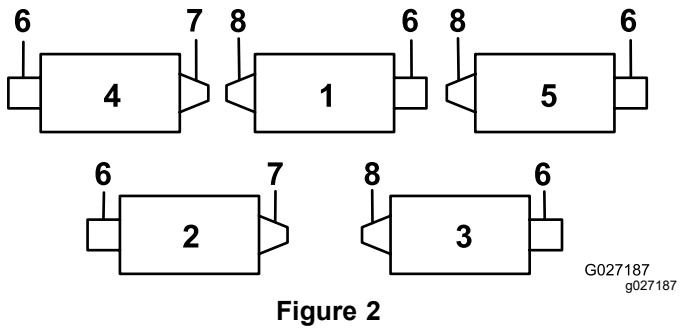

Figure 2

Reelmaster 7000-D

1. #1 cutting unit
2. #2 cutting unit
3. #3 cutting unit
4. #4 cutting unit
5. #5 cutting unit
6. Reel motor
7. Right roller brush drive assembly
8. Left roller brush drive assembly

2

Installing the Roller Brush

Parts needed for this procedure:

1	Roller-brush assembly
1	Retaining ring
1	Left belt cover/plate assembly
1	Grease fitting (90°)
2	Bolt (5/16 x 1/2 inch)
2	Drive pulley
1	Flange-head bolt
1	Belt
1	Shim washer (as required for belt alignment)

Preparing the Cutting Units

1. Park the machine on a level surface and engage the parking brake.
2. Ensure that the cutting units are disengaged.
3. Shut off the engine and remove the key.
4. Remove all the cutting units from the machine.

   Important: **Check the cutting unit for the desired height of cut and attitude. Make adjustments per the *Operator's Manual*, if required, before installing the kit.**

Repositioning the Idler Pulley Assembly (For Right-Hand Drives Only)

Note: Right-hand drives are on Reelmaster 3100 Cutting Unit 3 (Figure 1) and Reelmaster 7000 Cutting Units 2 and 4 (Figure 2).

For right-hand rear roller brush drives (Figure 1 and Figure 2), reverse the idler pulley assembly to mount on the **right end** of the cutting unit (Figure 3) as follows:

1. Remove the idler pulley assembly from the left end of the cutting unit and mount it to the lower hole in the brush plate on the right end of the cutting unit (Figure 3).

   Note: The idler pulley must pivot freely; do not overtighten the locknut on the idler pivot bolt.
2. Remove the carriage bolt and nut and relocate them to the upper hole previously occupied by the idler pulley assembly (Figure 3).

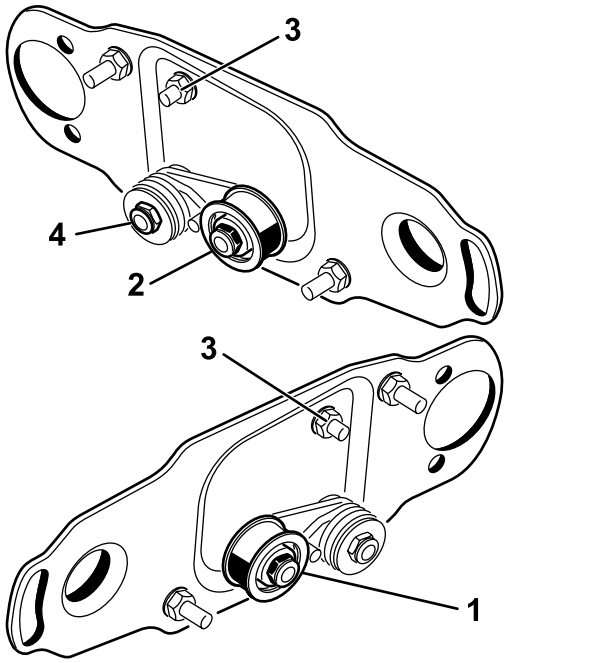

Figure 3

1. Idler pulley installation for left end of reel (as supplied in kit)
2. Idler pulley installation for right end of reel
3. Carriage bolt and nut
4. Do not overtighten this locknut.

Removing the Brush Cover Drain Plug

Remove only the bottom drain plug (Figure 4) from the brush covers. This allows moisture to drain from the belt area.

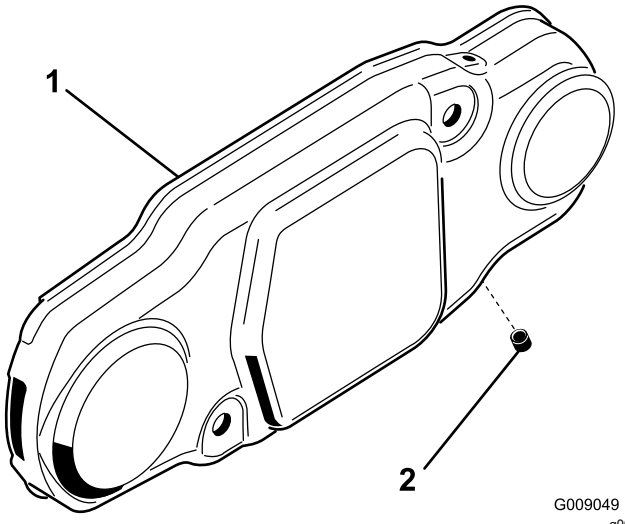

Figure 4

1. Brush cover
2. Bottom drain plug

Installing the Roller-Brush Assembly

1. Remove the grease fitting for the roller from the side of the cutting unit that has the roller-brush housing (Figure 6).

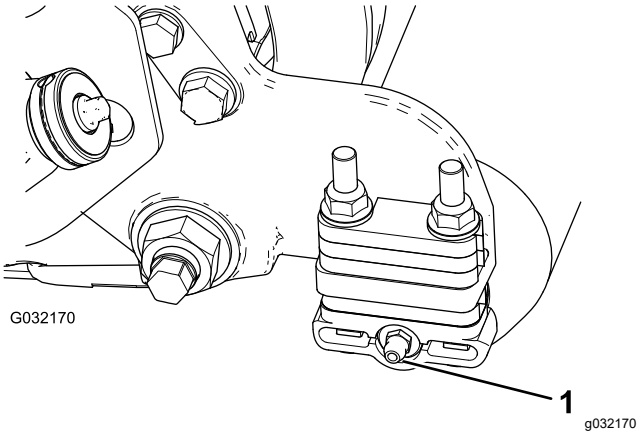

Figure 5

1. Grease fitting

2. Install the 90° grease fitting so that it faces rearward (Figure 5).

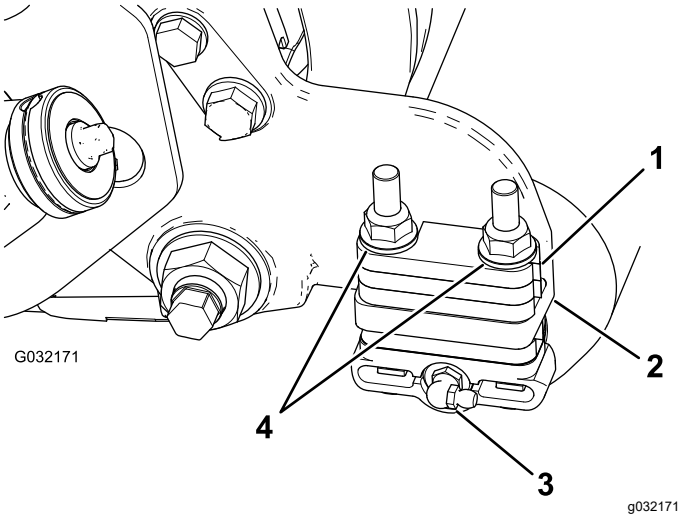

Figure 6

1. 6 mm (1/4 inch) spacer
2. Side-plate mounting flange
3. 90° grease fitting
4. Flange locknuts (remove)

3. Remove the 2 flange locknuts securing each roller bracket to the side plates, **as well as any 6 mm (1/4 inch) spacers positioned on the top side of the side-plate mounting flange** (Figure 6).

   Note: Do not remove the bolts. Keep the flange locknuts for future assembly.

4. Position the left or right roller-brush-assembly mounting brackets onto the roller-bracket bolts (Figure 7).

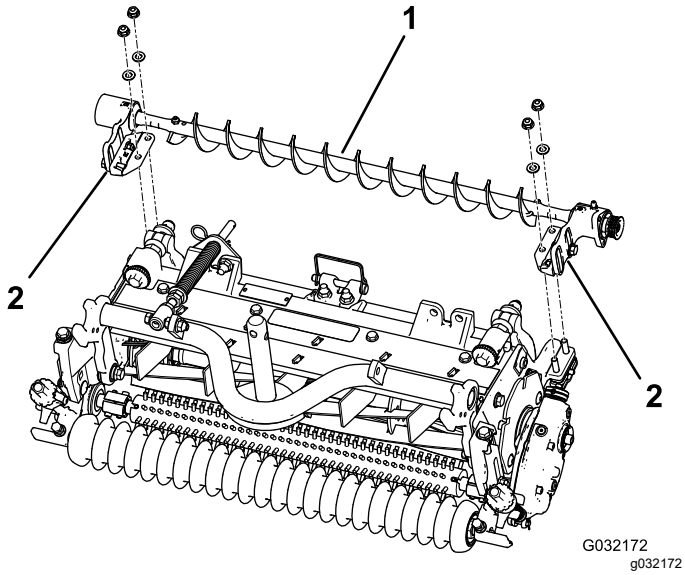

Figure 7

1. Left roller-brush assembly
2. Roller-brush mounting bracket

Important: **Attach the mounting brackets for the roller-brush assembly directly to the top surface of the side-plate mounting flange of the cutting unit.** ***Do not put spacers between the roller-brush mounting brackets and the side-plate mounting flanges.*** **Save the additional 6 mm (1/4 inch) spacers for potential later use.**

5. Secure the brush-assembly mounting brackets to the cutting-unit side plates with the previously removed nuts.

Installing the Weights

Install the appropriate weights to the cutting units.

- **For Reelmaster 3100 Cutting Units:**

  Refer to Installing the Weights in the Reelmaster 3100 Universal Groomer Kit instructions (Model 03240) (Figure 8).

- **For Reelmaster 7000 Cutting Units:**

  Order the Model 03419 weight kit (Figure 9).

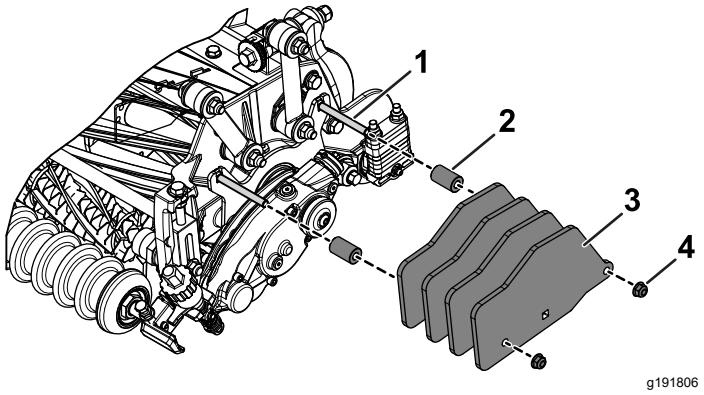

Figure 8

Weight included with Reelmaster 3100 Universal Groomer Kit (Model 03240)

1. Carriage bolts (5/16 x 3 inches)
2. Spacer
3. Weight
4. Flange nuts (5/16 inch), torque to 20 to 26 N·m (15 to 19 ft-lb)

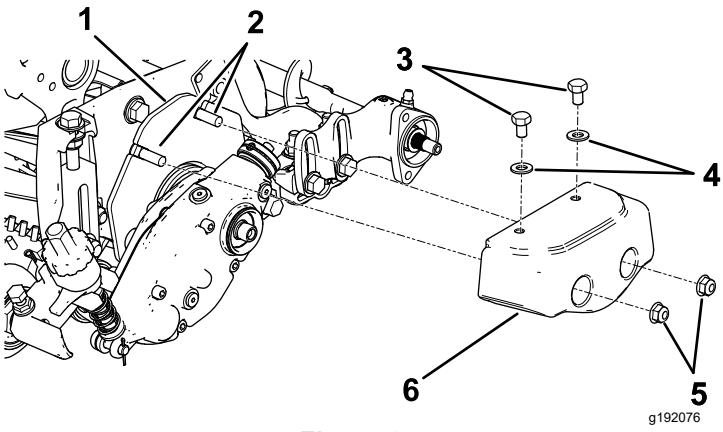

Figure 9

Weight Kit (Model 03419)

1. Weight plate
2. Carriage bolts (5/16 x 2 inches)
3. Bolts (5/16 x 1/2 inch)
4. Washers (5/16 inch)
5. Flange nuts (5/16 inch)
6. Weight

Installing the Roller-Brush Plate

1. Slide each excluder seal outward until the lip seals are in light contact with each bearing housing (Figure 10).

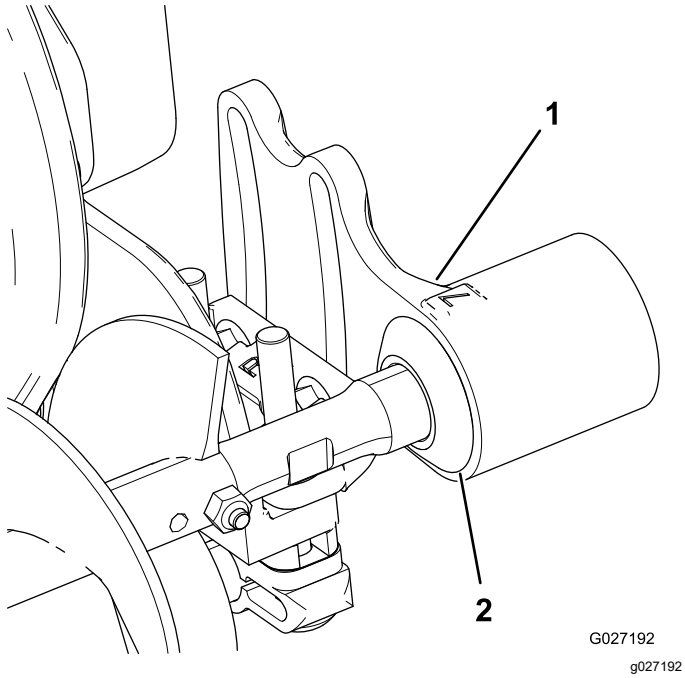

Figure 10

1. Bearing housing
2. Excluder seal

2. Remove and discard both the hex-drive bolt securing the dust cover and the dust cover.

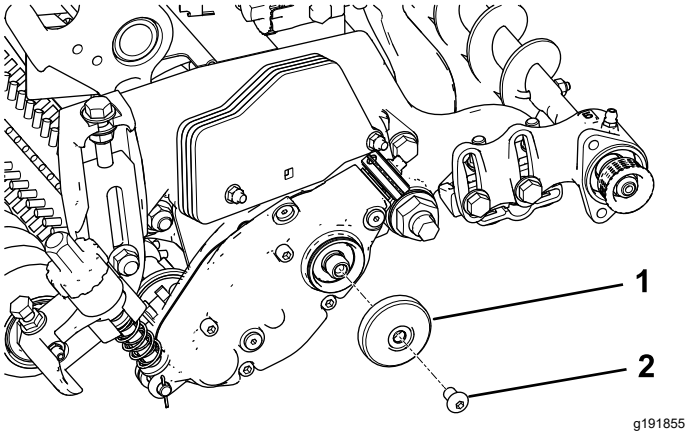

Figure 11

1. Dust cover
2. Hex-drive bolt

3. Install the left or right roller-brush pivot plate (Figure 12).

   Note: Ensure that the idler-pulley assembly is installed on the bottom as shown in Figure 12.

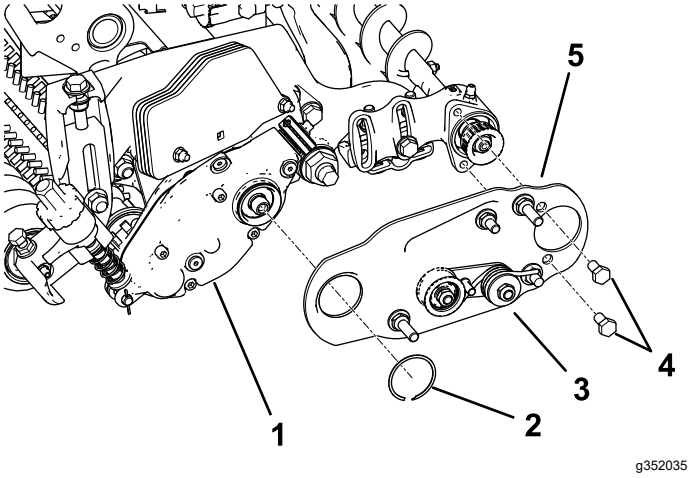

Figure 12

1. Universal groomer
2. Retaining ring
3. Idler-pulley assembly
4. Bolts
5. Roller-brush pivot plate assembly

4. Apply blue thread-locking compound to the 2 bolts (5/16 x 1/2 inch) and use them to mount the brush plate to the roller-brush-bearing housing (Figure 12).

   Note: Torque the bolts to 20 to 26 N·m (15 to 19 ft-lb).

5. Secure the brush plate to the roller-brush housing with the retaining ring (Figure 12).
6. Ensure that the roller-brush plate is parallel to the cutting-unit side plate. If it is not parallel, proceed as follows:
   A. Loosen the 2 flange locknuts securing the roller-brush mounting bracket to the cutting-unit side plate (Figure 13).
   B. Rotate the roller-brush-bearing housing until the brush plate is parallel to the cutting-unit side plate (Figure 13).
   C. Tighten the 2 flange locknuts securing the roller-brush mounting bracket to the cutting-unit side plate (Figure 13).

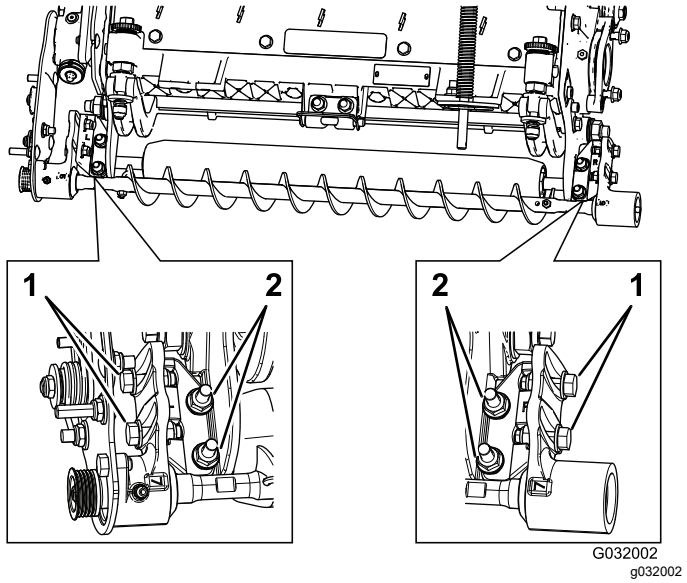

Figure 13

1. Loosen these bolts for positioning the roller brush.
2. Loosen these nuts for making the roller-brush plate parallel.

Positioning the Roller Brush

1. Loosen the 2 bolts securing each roller-brush-bearing housing to the roller-brush mounting bracket (Figure 13).

   Note: The bolts should be loose from the factory.

2. Position the roller brush so that it is just touching or resting on the rear roller (Figure 14).

   Important: **The roller-brush shaft must not contact the cutting-unit side plate.**

   Important: **Heavy brush contact on the roller causes premature brush wear.**

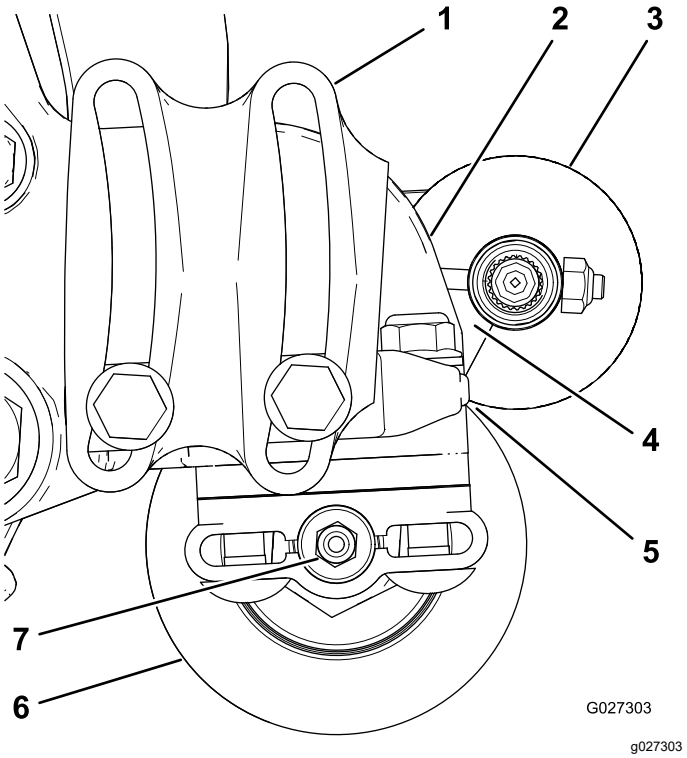

Figure 14

1. Bearing housing (some parts not shown)
2. Side plate
3. Roller brush
4. Ensure that there is clearance here.
5. Light contact
6. Rear roller
7. Grease fitting

Note: The roller-brush shaft must be parallel to the rear roller.

Important: **Position both roller-brush-bearing housings so that they are parallel to the ground to ensure clearance for the rear-roller grease fitting.**

3. Tighten the 2 bolts securing each roller-brush-bearing housing to the roller-brush mounting brackets.

Installing the Drive Pulley

1. Restrain the reel before installing the drive pulley; refer to Restraining the Reel for Installing Threaded Inserts (page 13).
2. Install the drive pulley onto the groomer shaft (Figure 15).

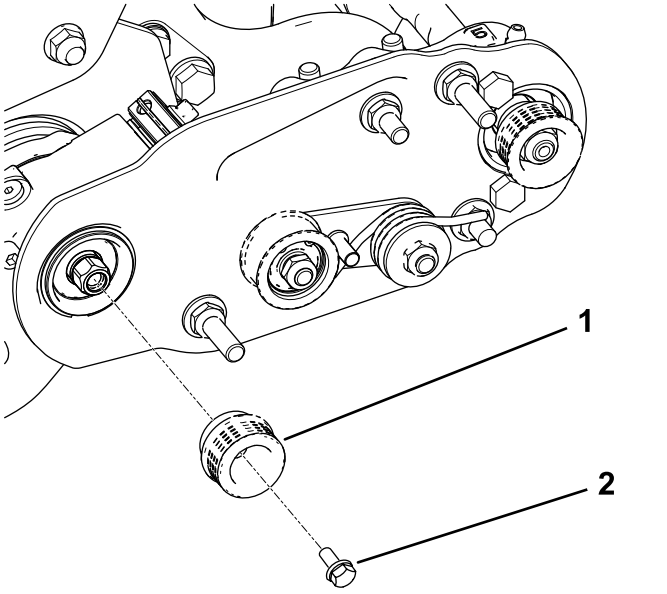

Figure 15

1. Drive pulley
2. Flange-head bolt—torque to 20 to 26 N·m (15 to 19 ft-lb)

3. Apply blue thread-locking compound to the flange-head bolt and use the bolt to secure the pulley to the driveshaft; refer to Figure 15.

   Note: Torque the bolt to 20 to 26 N·m (15 to 19 ft-lb).

   Important: **If you do not properly torque the bolt, the bolt will come loose.**

Installing the Belt

1. Install the belt onto the pulleys as follows:
   - Loop the belt around the **drive** pulley and then over the top of the idler pulley (Figure 16).

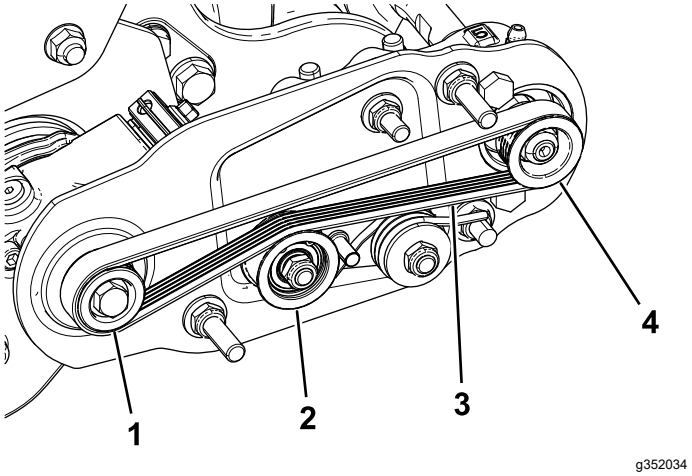

Figure 16

1. Drive pulley
2. Idler-pulley assembly
3. Belt
4. Driven pulley

   - Start the belt on the **driven** pulley (Figure 17).
   - Use a deep-well socket (9/16 inch) to rotate the brush assembly and guide the belt onto the driven pulley (Figure 17).

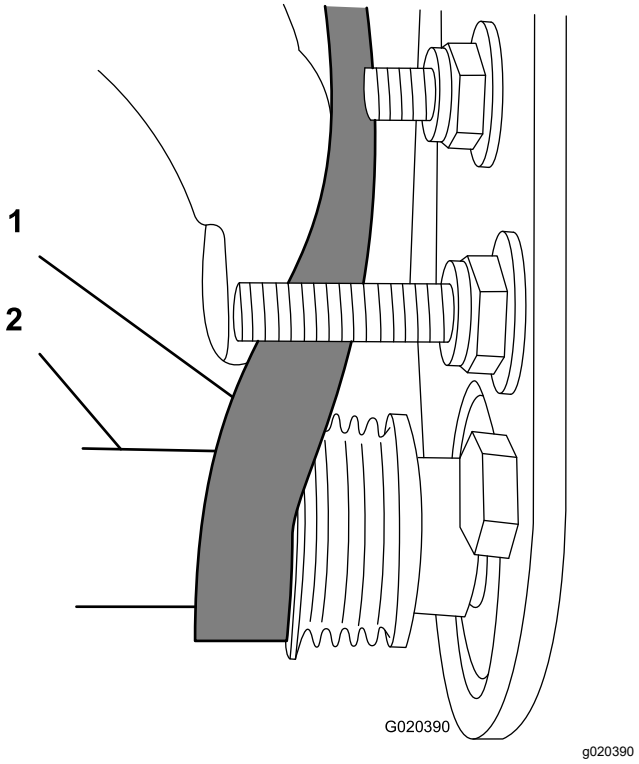

Figure 17

1. Belt
2. Deep-well socket (9/16 inch)

Important: **Make sure that the ribs on the belt are properly seated in the grooves in each pulley and that the belt is in the center of the idler pulley.**

2. Push down on the idler pulley to ensure that the idler-pulley assembly pivots freely.

Completing the Installation

1. Check the alignment of the belt and pulleys as follows:

   Note: The belt must be properly tensioned prior to checking the alignment.

   - Lay a straightedge along the outer face of the **drive** pulley (Figure 18). **Do not** lay the straightedge across both the drive pulley and the driven pulley.
   - The outer faces of the drive pulley and the driven pulley should be in line within 0.76 mm (0.030 inch).
   - If the pulleys are not aligned, refer to Checking and Adjusting the Pulley Alignment (page 11).
   - If the pulleys are aligned, continue with the installation.
   - **Do not** use the idler pulley to check the alignment.

   Important: **The belt may fail prematurely if the pulleys are not properly aligned.**

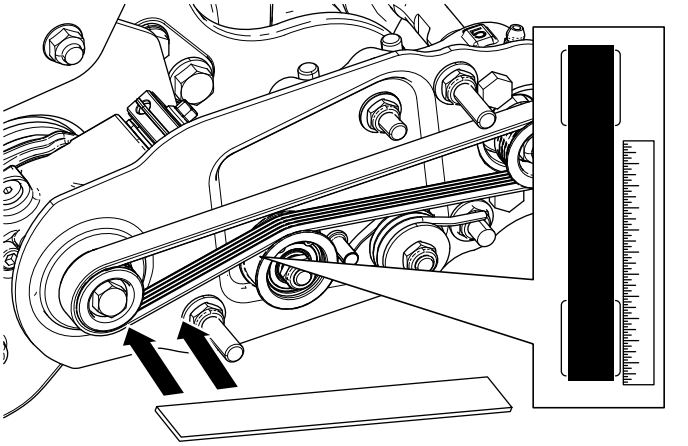

Figure 18

2. Slide the belt cover onto the mounting bolts and secure the cover with 2 flange nuts (Figure 19).

   Important: **Do not overtighten the nuts as damage to the cover may occur.**

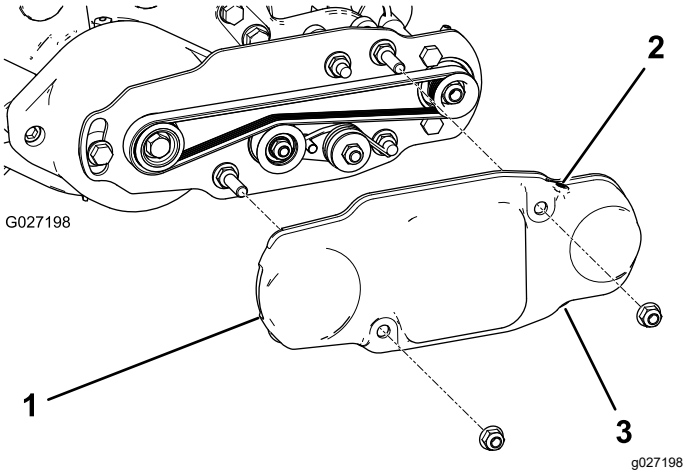

Figure 19

1. Belt cover
2. Setscrew installed
3. Setscrew removed

3. Lubricate the grease fittings on each of the roller brush bearing housings with No. 2 lithium grease (Figure 20).

   Note: Wipe off any excess grease, specifically around the excluder seals.

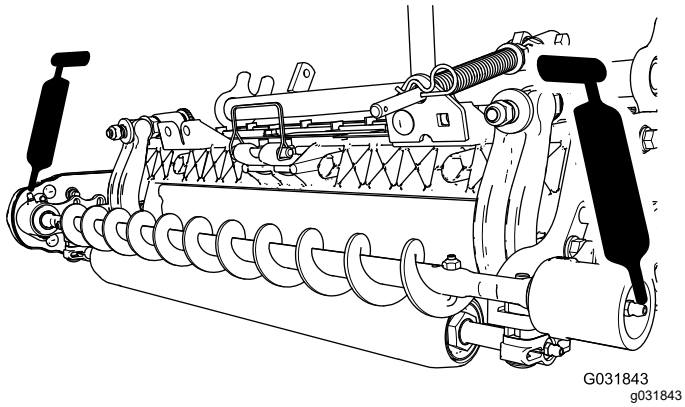

Figure 20

3

Installing the High Height-of-Cut Brush

(Optional)

Parts needed for this procedure:

—	High height-of-cut brush (optional)

Procedure

Install the high height-of-cut brush (sold separately) when the height of cut is 2.5 cm (1 inch) or more (5 or more spacers installed below the side-plate pad).

1. If a roller brush is installed on the cutting unit, remove the 2 bolts, washers, and nuts securing the non-drive-bearing housing to the bearing-housing mounting bracket (Figure 21 and Figure 22).

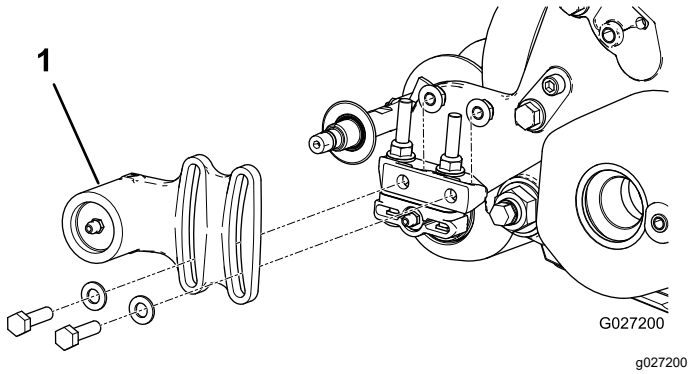

Figure 21

1. Non-drive-bearing housing

2. Slide the non-drive-bearing housing and the excluder seal off the brush shaft (Figure 22).

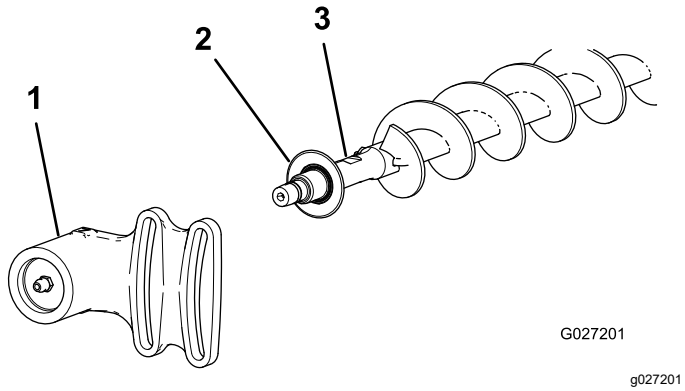

Figure 22

1. Non-drive-bearing housing
2. Excluder seal
3. Brush shaft

3. Remove the 2 J-bolts and the nuts (Figure 23).
4. Slide the existing brush off the brush shaft (Figure 23).
5. Loosen the 2 bolts, washers, and nuts securing the drive-bearing housing to the bearing-housing mounting bracket (Figure 23).
6. Slide the high height-of-cut brush onto the brush shaft (Figure 23).
7. Clamp the brush onto the shaft with the 2 J-bolts and nuts previously removed (Figure 23).

   Important: **Insert the threaded end of the J-bolts through the outer holes of the brush shaft while hooking the curved ends of the J-bolts into the inner holes.**
8. Torque the J-bolt locknuts to 2 to 3 N·m (20 to 25 in-lb).

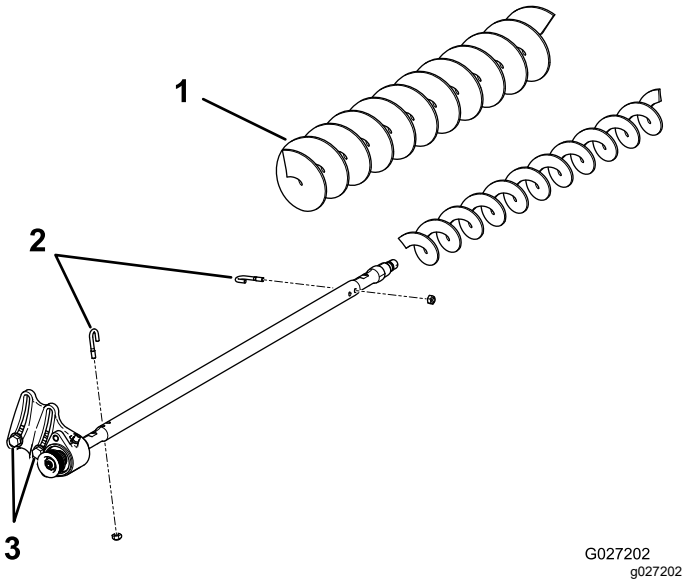

Figure 23

1. High height-of-cut brush
2. J-bolts
3. Loosen these bolts.

9. Install the excluder seal and the non-drive-bearing housing onto the brush shaft (Figure 22).
10. Mount the non-drive-bearing housing to the bearing-housing mounting bracket with the 2 bolts, washers, and nuts previously removed.

    Note: Be careful not to knock the seal spring off.
11. Tighten the 2 bolts, washers, and nuts securing the drive-bearing housing to the bearing-housing mounting bracket.

Maintenance

- Ensure that the brush is parallel to the roller with 1.5 mm (0.060 inch) clearance to light contact.
- Grease the fittings every 50 hours and after every washing.
- When replacing a roller brush, torque the J-bolts to 2 to 3 N·m (20 to 25 in-lb).
- When replacing the brush-shaft-driven pulley, torque the nut to 36 to 45 N·m (27 to 33 ft-lb).
- When replacing the brush-drive pulley, apply blue thread-locking compound to the bolt and torque it to 20 to 26 N·m (15 to 19 ft-lb).

Note: The roller brush, the idler bearing, and the belt are considered consumable items.

Checking and Adjusting the Pulley Alignment

1. Make note of which way the pulley needs to move.

   Note: The driven pulley (at the roller-brush shaft) can move in or out (Figure 24).

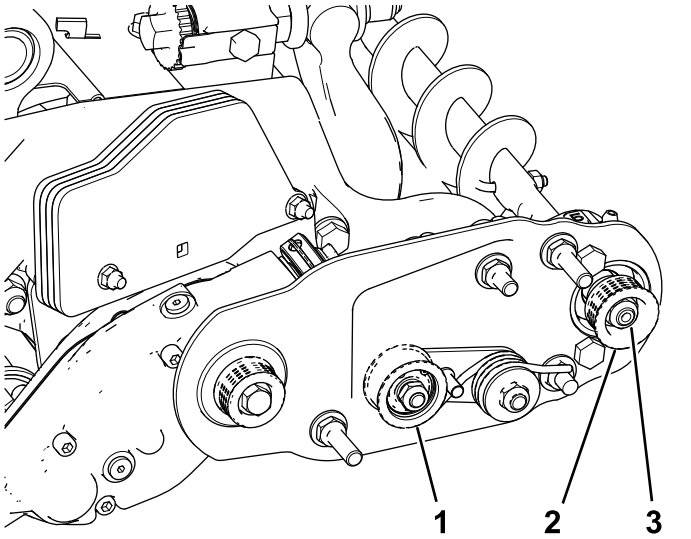

Figure 24

1. Idler pulley
2. Driven pulley
3. Driven-pulley nut

2. While rotating the reel, which rotates the drive pulley, pry the belt off the drive pulley (Figure 24).

   Note: Wear a padded glove or use a heavy rag to rotate the reel.

3. Remove the locknut securing the driven pulley to the brush shaft (Figure 24 or Figure 25).

   Note: Use a wrench (1/2 inch) on the roller-brush shaft flats to keep it from rotating.

4. Remove the driven pulley from the shaft (Figure 25).
5. If the pulley needs to move out, add a 0.8 mm (0.032 inch) thick washer (Figure 25).

   Note: If the pulley needs to move in, remove the existing 0.8 mm (0.032 inch) thick washer.

6. Install the pulley.

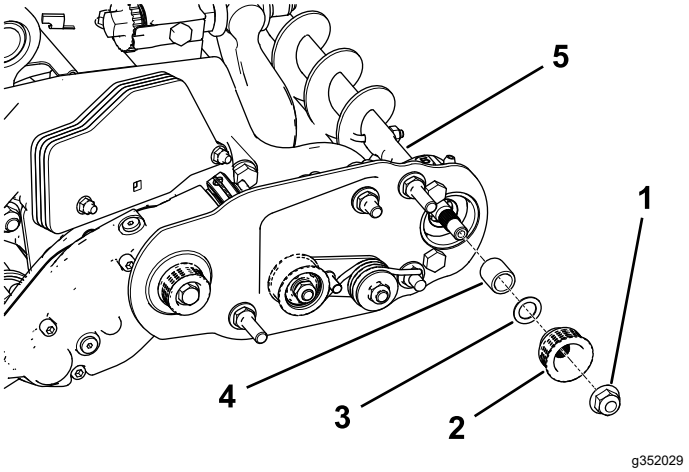

Figure 25

1. Locknut
2. Driven pulley
3. Washer—0.8 mm (0.032 inch) thick
4. Spacer
5. Brush shaft flats

7. While holding the flats of the roller-brush shaft, secure the driven pulley on the shaft with the flange nut (3/8–16 inch) previously removed.

   Note: Seat the locknut; then torque it to 36 to 45 N·m (27 to 33 ft-lb).

8. Install the belt onto the pulleys as follows:

   A. Loop the belt around the **drive** pulley and then over the top of the idler pulley (Figure 26).

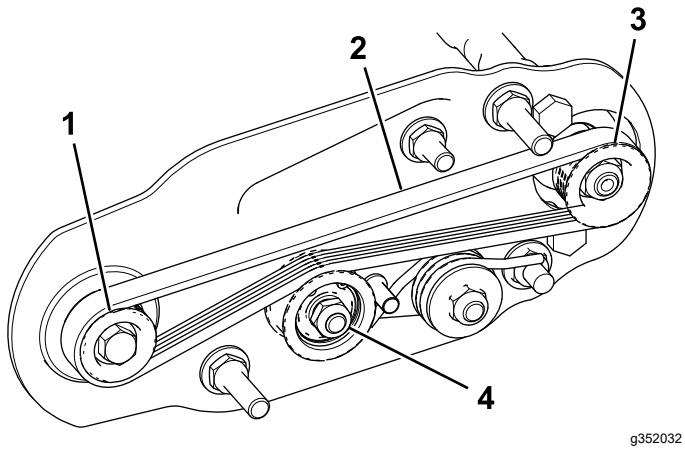

Figure 26

1. Drive pulley
2. Belt
3. Driven pulley
4. Idler-pulley assembly

B. Start the belt on the **driven** pulley (Figure 26).

C. Use a deep-well socket (9/16 inch) to rotate the brush assembly and guide the belt onto the driven pulley (Figure 27).

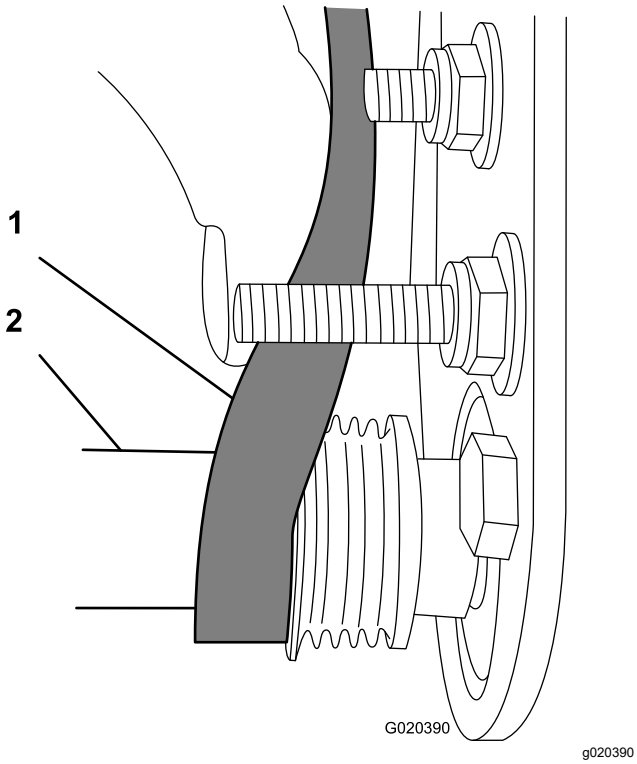

Figure 27

1. Belt
2. Deep-well socket (9/16 inch)

Important: **Ensure that the ribs on the belt are properly seated in the grooves in each pulley and that the belt is in the center of the idler pulley.**

9. Check the pulley alignment again and repeat this procedure if necessary.

Restraining the Reel

⚠ WARNING

The cutting reel blades are sharp and capable of amputating hands and feet.

- **Keep your hands and feet outside of the reel.**
- **Ensure that the reel is restrained before servicing it.**

Restraining the Reel for Removing Threaded Inserts

1. Loosen the shield-bolt on the left side of the cutting unit and raise the rear shield (Figure 28).
2. Insert a long-handled pry bar (recommended 3/8 x 12 inches with a screwdriver handle) through the back of the cutting reel, closest to the side of the cutting unit that you will be torquing (Figure 28).
3. Place the pry bar against the weld side of the reel support plate (Figure 28).

   Note: Insert the pry bar between the top of the reel shaft and the backs of 2 reel blades so that the reel will not move.

   Important: **Do not contact the cutting edge of any blades with the pry bar; this may damage the cutting edge and/or cause a high blade.**

   Important: **The insert on the left side of the cutting unit has left-hand threads. The insert on the right side of the cutting unit has right-hand threads.**

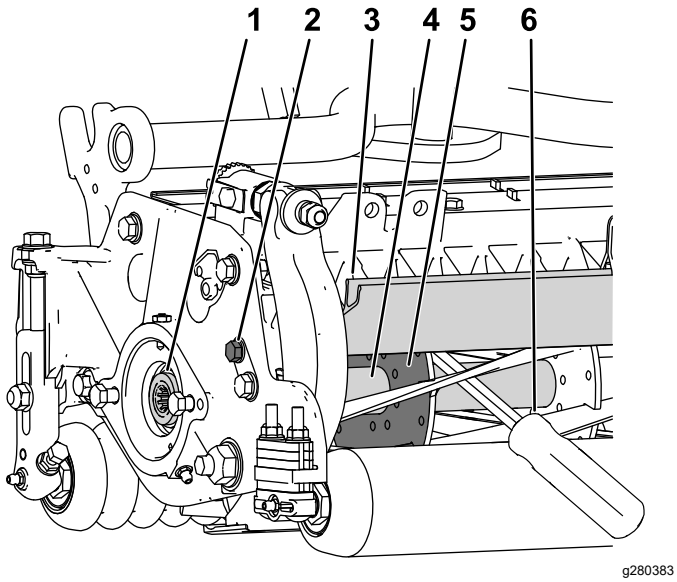

Figure 28

1. Threaded insert for removal
2. Loosen the shield bolt.
3. Rear shield
4. Reel shaft
5. Reel support plate
6. Pry bar inserted along the weld side of the reel support plate.

4. Rest the handle of the pry bar against the rear roller.
5. Complete the removal of the threaded insert while ensuring that the pry bar stays in place, then remove the pry bar.
6. Lower the rear shield and tighten the shield-bolt.

Restraining the Reel for Installing Threaded Inserts

1. Insert a long-handled pry bar (recommended 3/8 x 12 inches with a screwdriver handle) through the front of the cutting reel, closest to the side of the cutting unit that you will be torquing (Figure 29).
2. Place the pry bar against the weld side of the internal cutting reel reinforcement (Figure 29).

   Note: The pry bar should contact a blade at the front, the reel shaft, and a blade at the back of the back of the reel, locking it in place.

   Important: **Do not contact the cutting edge of any blades with the pry bar; this may damage the cutting edge and/or cause a high blade.**

   Important: **The insert on the left side of the cutting unit has left-hand threads. The insert on the right side of the cutting unit has right-hand threads.**

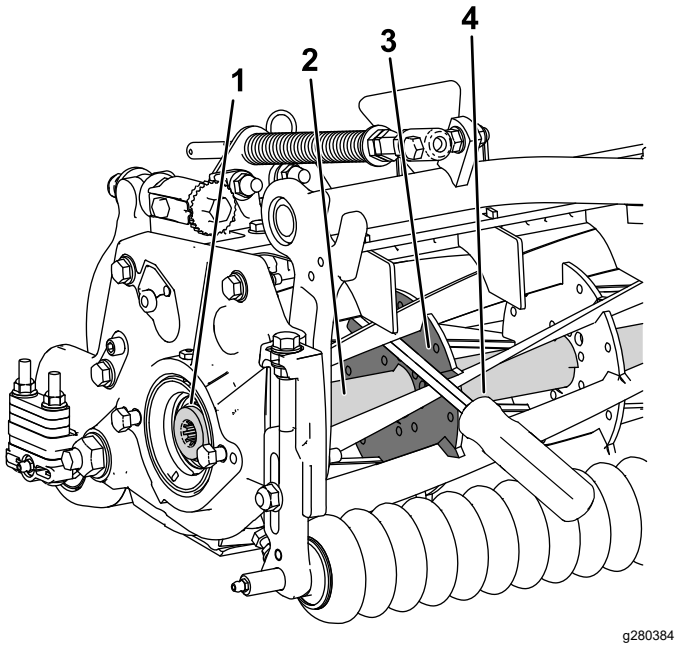

Figure 29

1. Threaded insert for installation
2. Reel shaft
3. Weld side of support plate
4. Pry bar

3. Rest the handle of the pry bar against the roller
4. Per the insert's installation instructions and torque requirements, complete the installation of the threaded insert while ensuring that the pry bar stays in place, then remove the pry bar.

Notes:

Declaration of Incorporation

The Toro Company, 8111 Lyndale Ave. South, Bloomington, MN, USA declares that the following unit(s) conform(s) to the directives listed, when installed in accordance with the accompanying instructions onto certain Toro models as indicated on the relevant Declarations of Conformity.

Model No.	Serial No.	Product Description	Invoice Description	General Description	Directive
03242	—	27-inch Rear Roller Brush Kit	RM 3100 27IN UNIVERSAL RRB KIT	27in RRB	2006/42/EC

Relevant technical documentation has been compiled as required per Part B of Annex VII of 2006/42/EC.

We will undertake to transmit, in response to requests by national authorities, relevant information on this partly completed machinery. The method of transmission shall be electronic transmittal.

This machinery shall not be put into service until incorporated into approved Toro models as indicated on the associated Declaration of Conformity and in accordance with all instructions, whereby it can be declared in conformity with all relevant Directives.

Certified:



Tom Langworthy
Engineering Director
8111 Lyndale Ave. South
Bloomington, MN 55420, USA
October 21, 2022

Authorized Representative:

Marcel Dutrieux
Manager European Product Integrity
Toro Europe NV
Nijverheidsstraat 5
2260 Oevel
Belgium

UK Declaration of Incorporation

The Toro Company, 8111 Lyndale Ave. South, Bloomington, MN, USA declares that the following unit(s) conform(s) to the regulations listed, when installed in accordance with the accompanying instructions onto certain Toro models as indicated on the relevant Declarations of Conformity.

Model No.	Serial No.	Product Description	Invoice Description	General Description	Regulation
03242	—	27-inch Rear Roller Brush Kit	RM 3100 27IN UNIVERSAL RRB KIT	27in RRB	S.I. 2008 No. 1597

Relevant technical documentation has been compiled as required per Schedule 10 of S.I. 2008 No. 1597.

We will undertake to transmit, in response to requests by national authorities, relevant information on this partly completed machinery. The method of transmission shall be electronic transmittal.

This machinery shall not be put into service until incorporated into approved Toro models as indicated on the associated Declaration of Conformity and in accordance with all instructions, whereby it can be declared in conformity with all relevant Regulations.

This declaration has been issued under the sole responsibility of the manufacturer.
The object of the declaration is in conformity with relevant UK legislation.



Tom Langworthy
Engineering Director
8111 Lyndale Ave. South
Bloomington, MN 55420, USA
October 21, 2022

Authorized Representative:

Marcel Dutrieux
Manager European Product Integrity
Toro U.K. Limited
Spellbrook Lane West
Bishop's Stortford
CM23 4BU
United Kingdom