FORM NO. 3313-176

TORO®

MODEL NO. 42-3380

INSTALLATION INSTRUCTIONS

SNOW CAB

Since this instruction sheet covers only a minimal amount of information necessary to maintain and operate your machine, we suggest that you keep this material with your Operator's Manual so that both may be referred to for instructions concerning safe operation and proper maintenance procedures.

ASSEMBLE SNOW CAB FRAME

IMPORTANT: When securing frame parts together, capscrew heads must be positioned to the inside of cab.

1. Secure top frame to front corner posts and rear vertical bow with capscrews (¼-20 x ¾") and locknuts (Fig. 1).

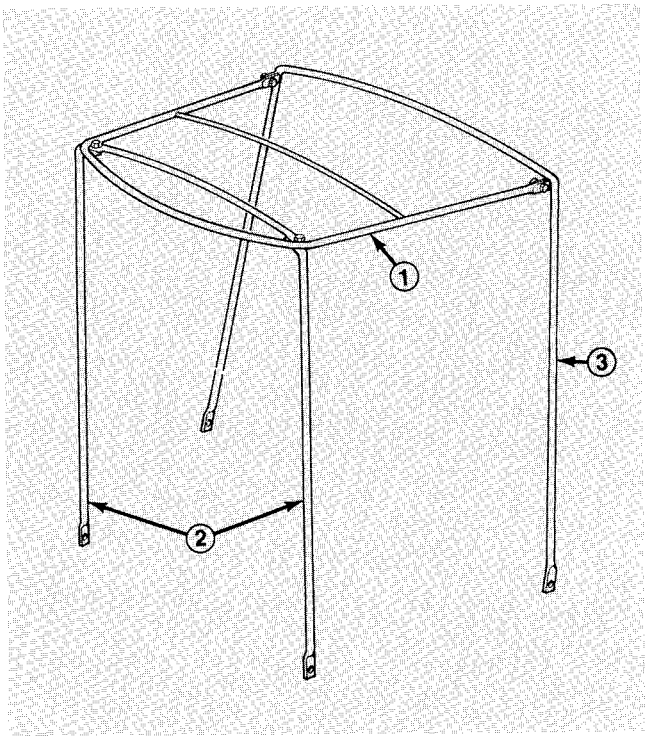

Figure 1

1. *Top frame*
2. *Corner post*
3. *Vertical bow*

2. Position horizontal curved bow to front corner posts (Fig. 2).

Note: Mount attaching brackets with cross braces to the outside.

3. Assemble the front corner posts and horizontal curved bow to the front of the attaching brackets and secure with capscrews (¼-20 x ¾") and locknuts (Fig. 2).

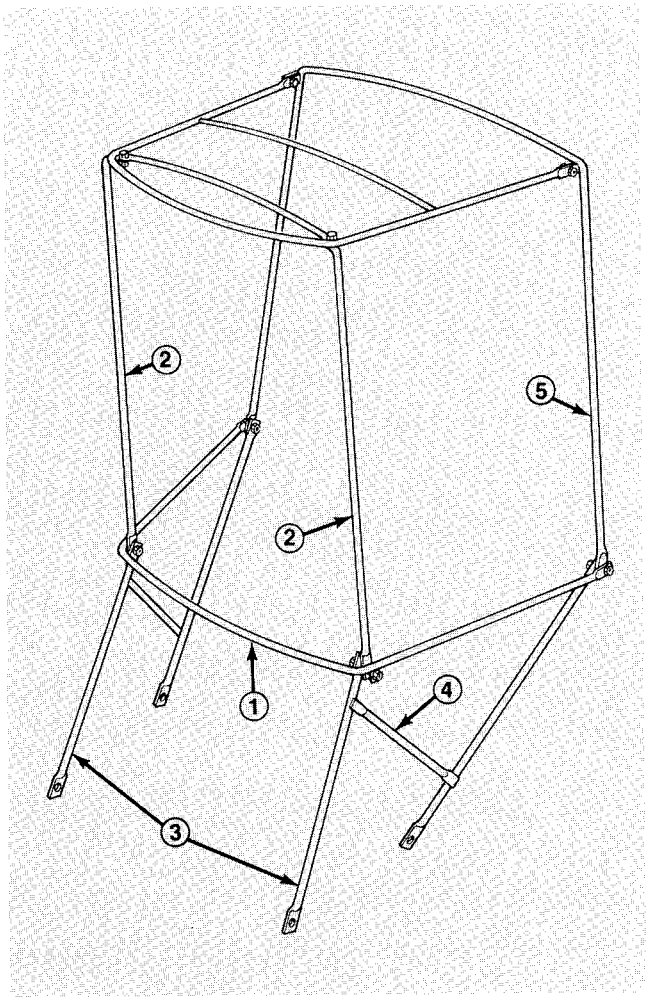

Figure 2

1. *Horizontal curved bow*
2. *Front corner posts*
3. *Attaching brackets*
4. *Attaching bracket cross brace*
5. *Rear vertical bow*

4. Assemble the rear vertical bow and horizontal curved bow to the rear of the attaching brackets and secure with capscrews and locknuts (Fig. 2).

COPYRIGHT © ALL RIGHTS RESERVED
©The Toro Company — 1980, Rev. 1987
MINNEAPOLIS, MN 55420 – U.S.A.

MOUNT CAB FRAME TO SNOWTHROWER

1. Remove lower capscrews and nuts securing control panel to handles (Fig. 3).

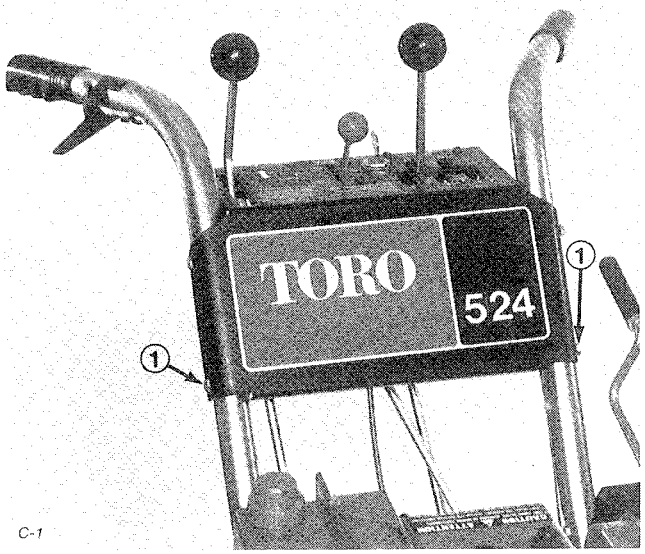

Figure 3

1. Lower – capscrews and nuts

Note: If snowthrower is equipped with a headlight, do not reinstall headlight to handle until cab and frame is fully installed on snowthrower.

Note: When mounting snow cab on 524, 724 or 824 snowthrowers, use upper mounting hole on attaching bracket (Fig. 4). On 826 and 1132 snowthrowers use lower mounting hole (Fig. 5).

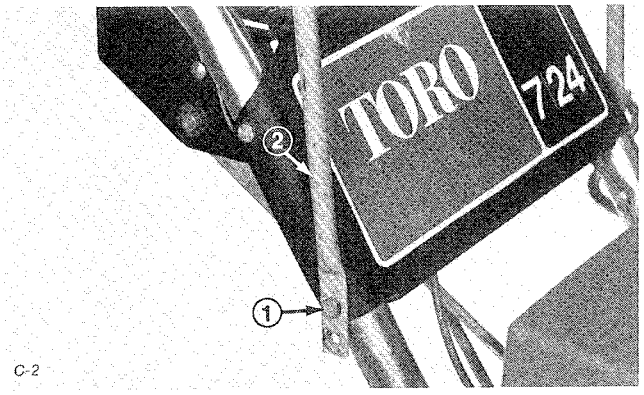

Figure 4

1. Upper mounting hole
2. Attaching bracket

2. Position front of frame assembly (attaching brackets) to handles and secure in place with (¼-20 x 2.00") capscrews, and nuts provided (Fig. 4 & 5).

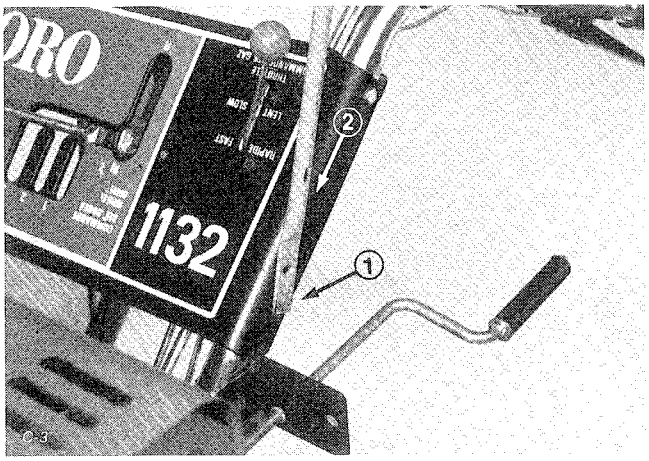

Figure 5

1. Lower mounting hole
2. Attaching bracket

3. Mount rear of frame assembly to handles with U-clamps, (¼-20 x 2.00") capscrews, and locknuts (Fig. 6).

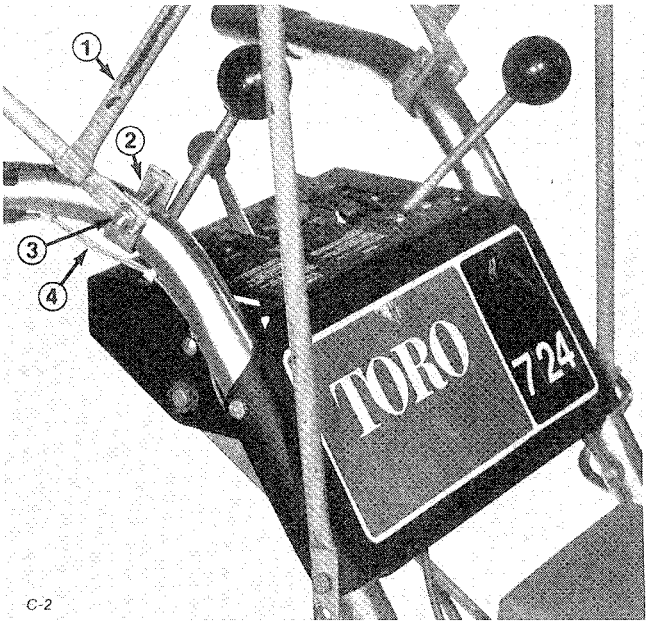

Figure 6

1. Frame assembly
2. U-clamp
3. Capscrew and locknut
4. Interlock lever wires outside U-clamps

IMPORTANT: to ensure proper operation of the interlock levers, "U" clamps must be installed to handles with wires on outside of clamps (Fig. 6).

4. Tighten all capscrews and nuts before proceeding on to next step.

MOUNT VINYL SHELL ON CAB

1. Carefully unfold vinyl shell and position over frame (Fig. 7).



Figure 7

2. Snap bottom of shell under chute control rod. Tie bottom under clutch rods and throttle cable (Fig. 8).

3. Continue to snap vinyl shell around frame until secured in place (Fig. 9).

Note: If headlight is to be mounted to snow-thrower, cut two slots in cab directly above mounting holes in handle. Disconnect wire and run through hole in cab. Secure headlight to handle.

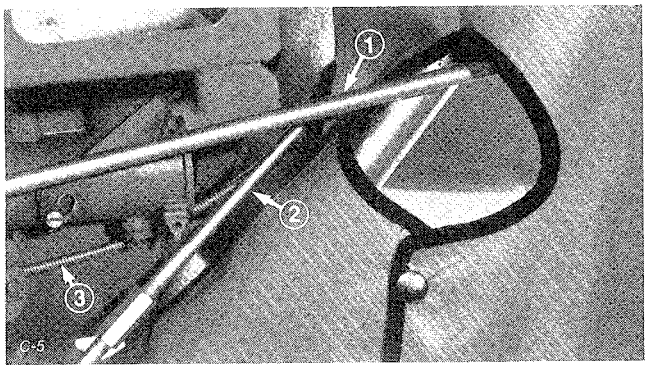

Figure 8

1. Chute control rod
2. Clutch rod
3. Throttle cable

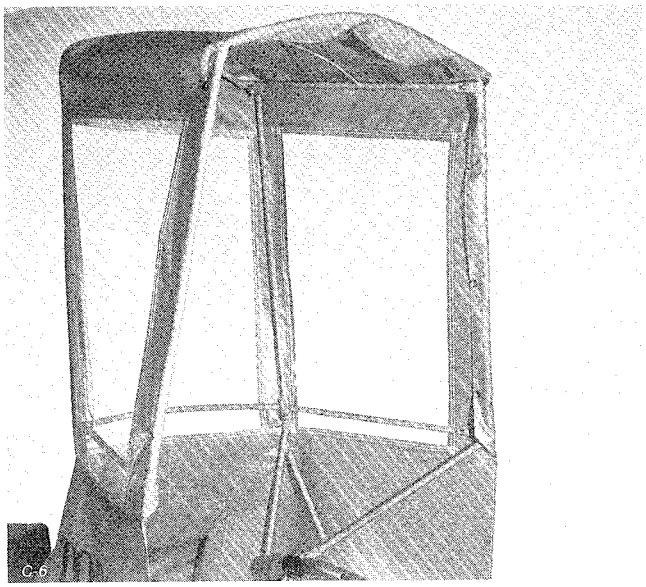

Figure 9


TORO®