FORM NO. 3313-646

TORO

MODEL NO. 68-7250

INSTALLATION INSTRUCTIONS

12 VOLT STARTING MOTOR KIT

Since this instruction sheet covers only a minimal amount of information necessary to maintain and operate your machine, we suggest that you keep this material with your Operator's Manual so that both may be referred to for instructions concerning safe operation and proper maintenance procedures.

NOTE: Battery and battery charger are not included in starting motor kit. Recommended battery is 12 volt, type SAE No. 22F, Ref. No. 17MJ1C. Recommended battery chargers are 110 volt Toro charger (26-3870) for use in Canada, 220 volt Toro charger (26-7140) for use in Europe or a comparable 1 to 5 amp. charger.

BATTERY DIMENSIONS

Length: 241mm (9.50 inches)

Width: 172mm (6.79 inches)

Height: 208mm (8.17 inches)

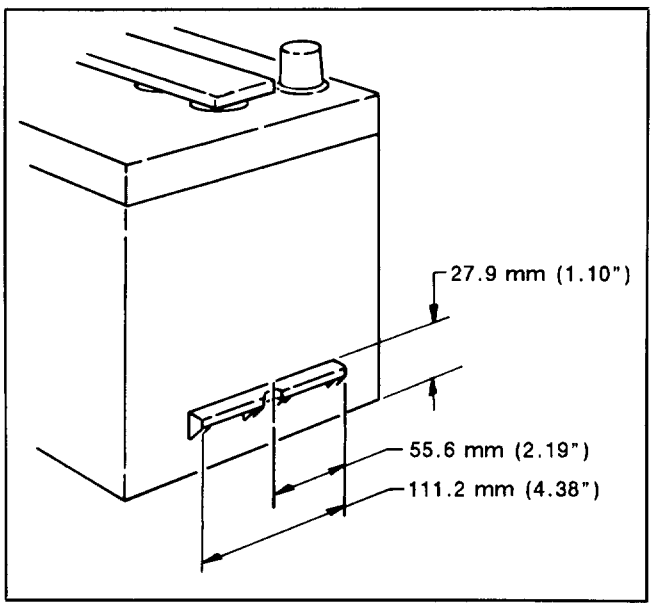

Figure 1

INSTALL 12 VOLT STARTING MOTOR KIT

1. Drain gasoline from fuel tank; refer to Operator's Manual for proper instructions. Wipe up any gasoline that may spill. Do not reconnect fuel line after tank is drained.

2. Some models have an additional casting installed in the starter mount location which must be removed before the starter can be installed (Fig. 2). Remove two M8 flange nuts and ignition module bracket, slide casting off and discard it. Disassemble ignition module from mount bracket, set module aside and discard bracket (Fig. 2).

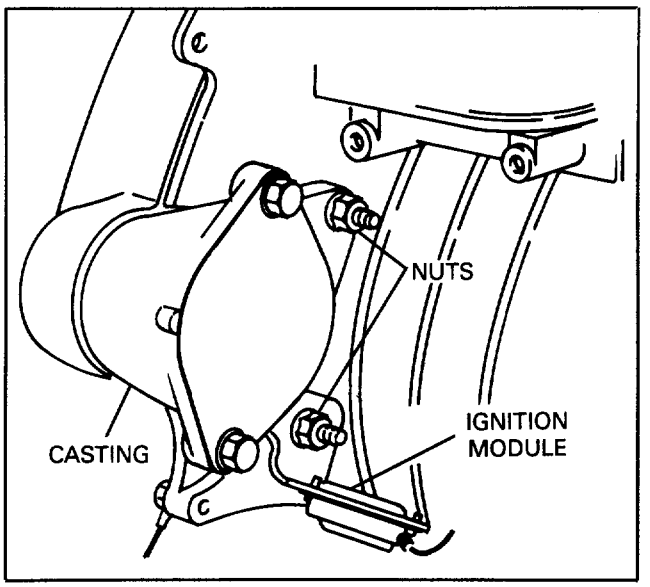

Figure 2

3. For models without the additional casting in the starter mount location, remove two M8 flange nuts securing pinion cover to engine and remove cover (Fig. 3).

4. Remove ignition module bracket from engine and discard fasteners. Disassemble module from bracket, set module aside and discard bracket (Fig. 3).

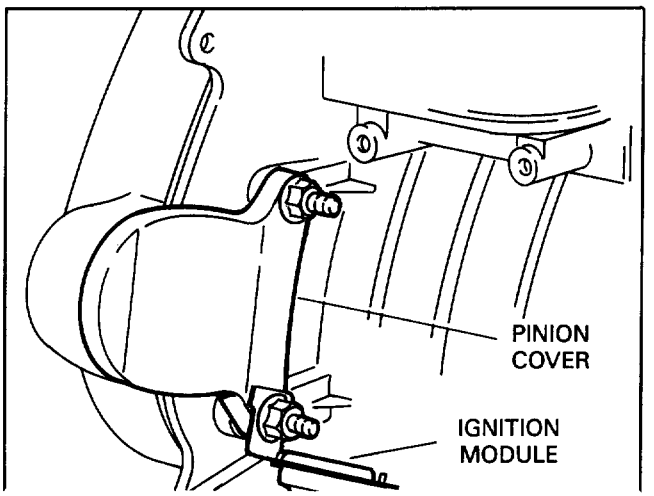

Figure 3

©The TORO Company — 1988

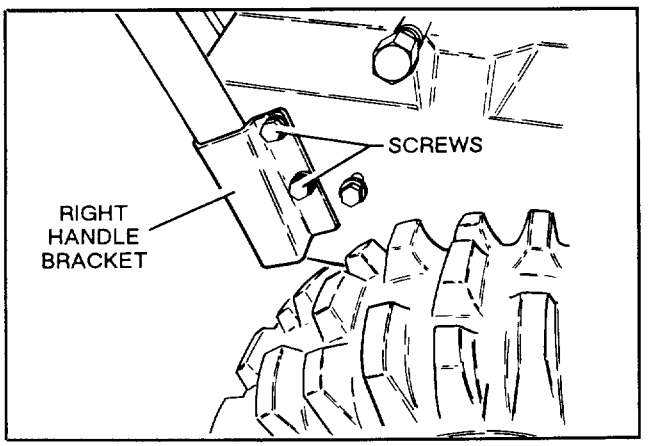

Figure 4

5. Remove and discard two flange head screws securing front of right handle bracket to engine frame (Fig. 4).

6. Remove three thread forming screws securing upper belt cover to engine base and slide cover up cables (Fig. 5). Do not lose cable cover.

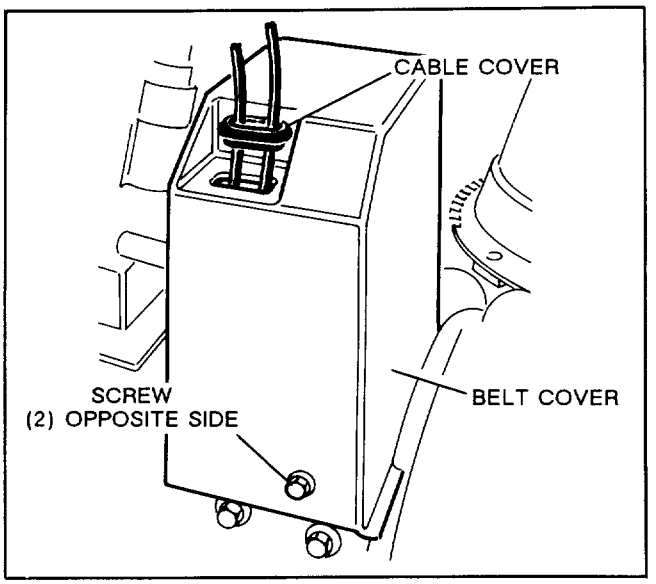

Figure 5

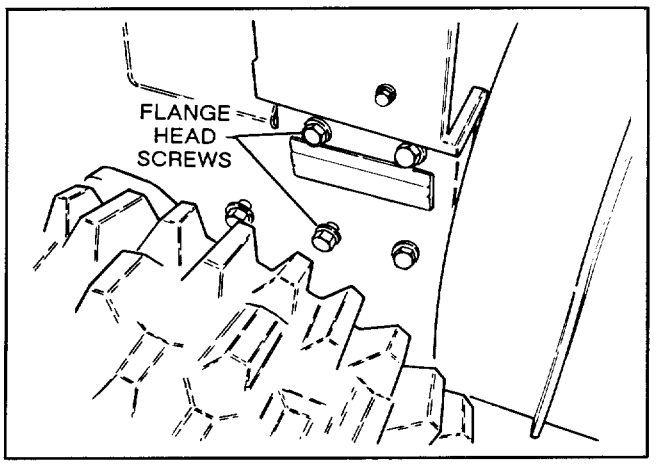

Figure 6

7. Remove and discard two flange head capscrews securing idler pulley assembly to engine frame (Fig. 6).

8. Connect black wire of charging plug and negative (-) battery cable (black) to engine with M8 x 12 mm capscrew and spring lockwasher (Fig. 7).

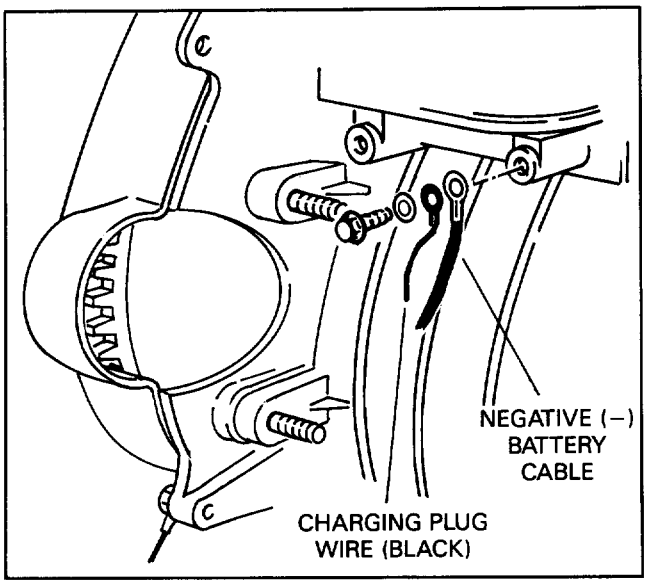

Figure 7

9. Secure starter motor assembly to engine with two M8 flange nuts (Figure 8).

NOTE: A two lead wire connector, to be used with charging plug, is provided for use with a non plug-in type charger.

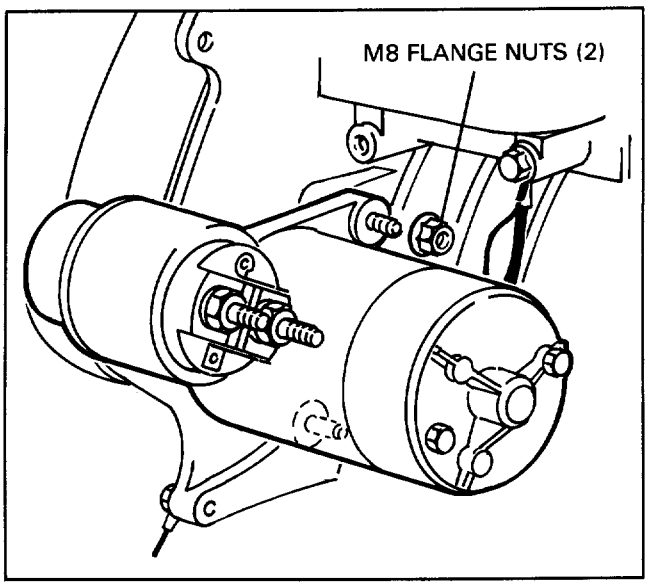

Figure 8

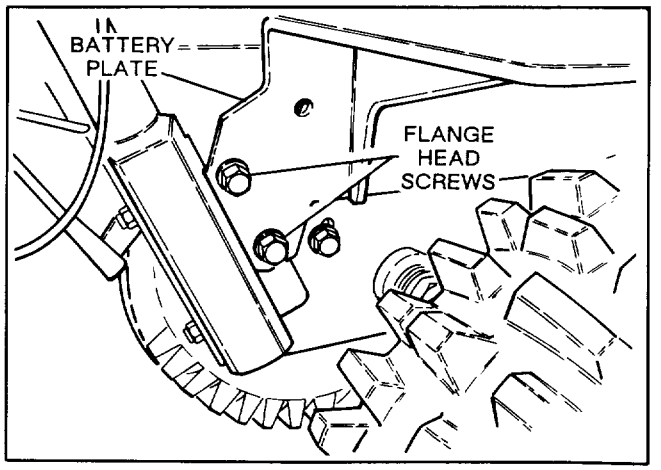

Figure 9

10. For easier access, tip unit on end and remove right wheel. Secure rear of battery mounting plate and handle bracket to engine frame with two 19 mm (¾") lg. flange head screws (Fig. 9).

11. Secure front of battery mounting plate to engine frame and idler assembly with two 25 mm (1") lg. flange head capscrews (Fig. 10).

NOTE: Be sure idler pulleys are aligned with belts when securing idler assembly.

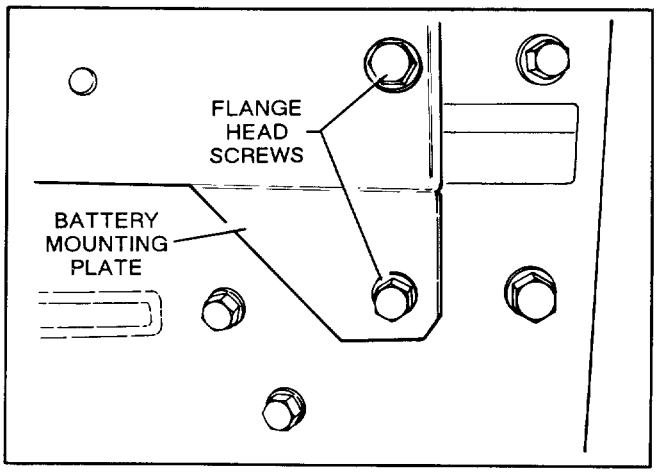

Figure 10

12. Using screws previously removed, reinstall belt cover. Ensure cable cover is plugged into belt cover.

13. With toggle pointing in proper direction (see Fig. 11), install switch to component mounting bracket.

14. Using #10 x 0.50" lg. screws and locknuts, install ignition module together with rectifier ground wire to component mounting bracket (Fig. 11).

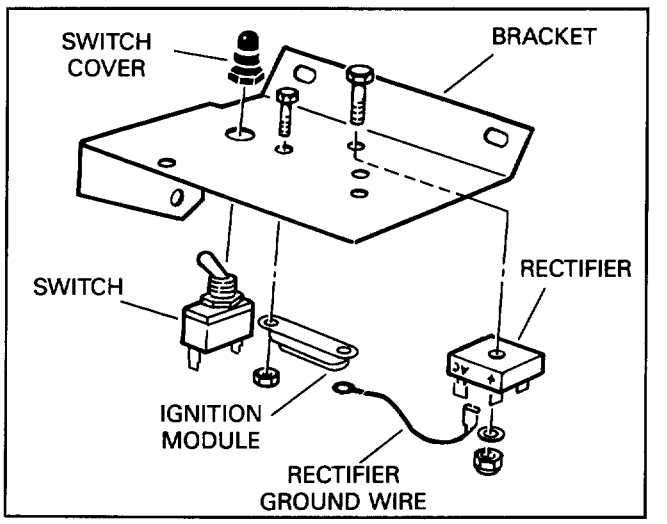

Figure 11

15. Using #10 x 1.00" lg. screw, washer and locknut, install rectifier to component mounting bracket. Negative terminal of rectifier should be adjacent to the ignition module (Fig. 11).

16. Connect remaining terminal on rectifier ground wire to negative (-) rectifier terminal (Fig. 11).

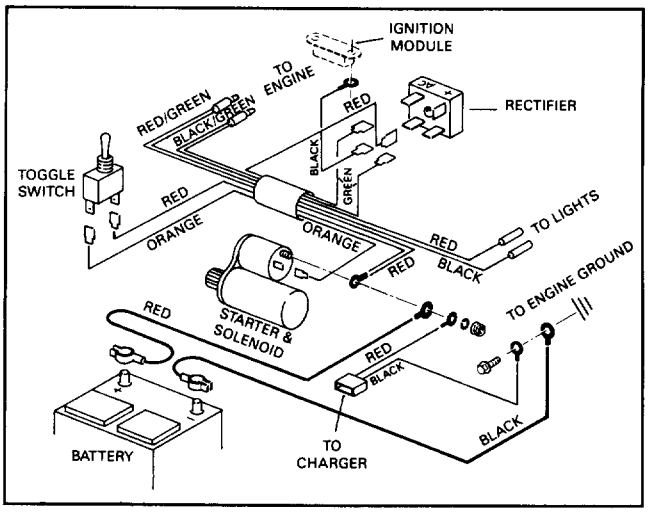

Figure 12

17. Connect positive (+) battery cable, red wire of wire harness and red wire of charging plug to solenoid terminal with spring lockwasher and M8 flange nut (Fig. 12).

18. Connect one end of orange harness wire to solenoid terminal and opposite end to either terminal of toggle switch (Fig. 12).

19. Connect red/green and black/green harness wires to red/white engine wires (Fig. 12).

20. Connect one red harness wire to toggle switch and other red wire to positive (+) terminal of rectifier (Fig. 12).

21. Connect both green harness wires to diagonal rectifier terminals marked "AC" (Fig. 12).

22. Install component mounting bracket to engine with a 16mm screw and lockwasher (Fig. 13).

NOTE: To avoid wire kinking and terminal damage, carefully route wire assembly.

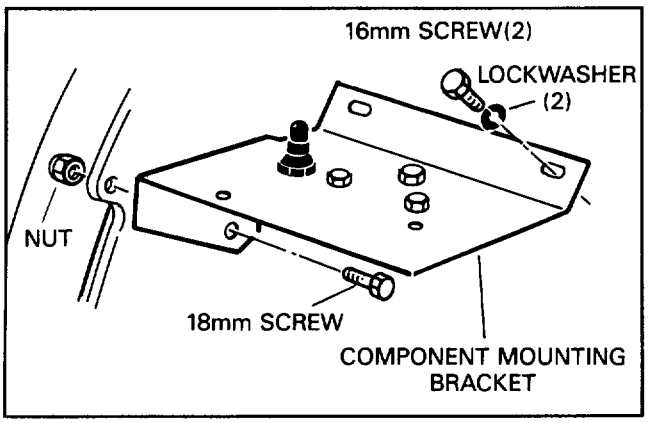

Figure 13

23. Install wheel (if removed) and tip unit down. Set battery onto mounting plate of snowthrower with battery posts toward the engine (Fig. 14).

24. Secure black (negative) battery cable to negative (-) battery post. Route cable so battery cover fits over cable (see Fig. 14) and tighten clamp.

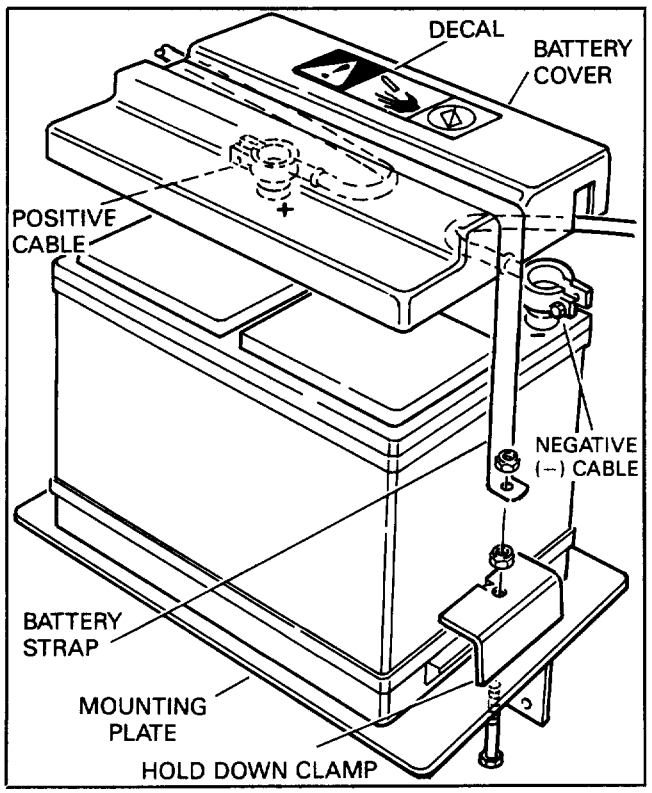

Figure 14

25. Secure red (positive) battery cable to positive (+) battery post in proper position (see Fig. 14) and tighten cable clamp.

26. Install battery cover and secure battery to mounting plate with capscrews, battery hold down clamps and nuts. Install decal on battery cover (see Fig. 14).

27. Install battery strap onto battery cover, slide strap ends onto capscrews and secure with two nuts (Fig. 14).

28. Retain all loose wires with tie straps and install warning decal on impeller housing (Fig. 15).

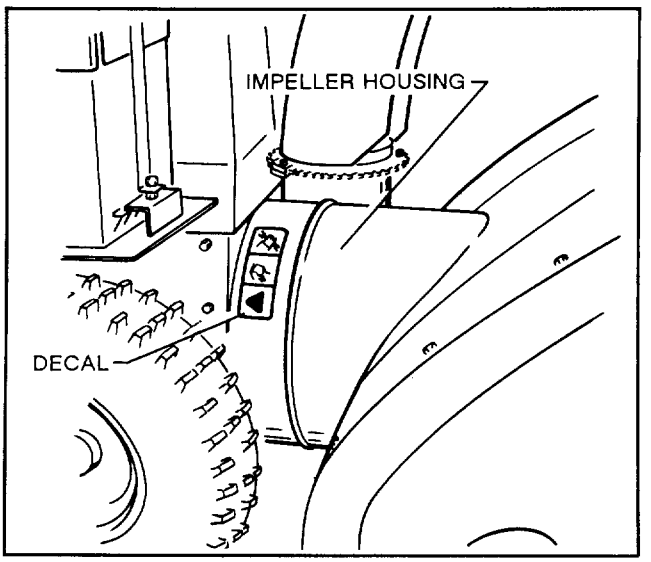

Figure 15

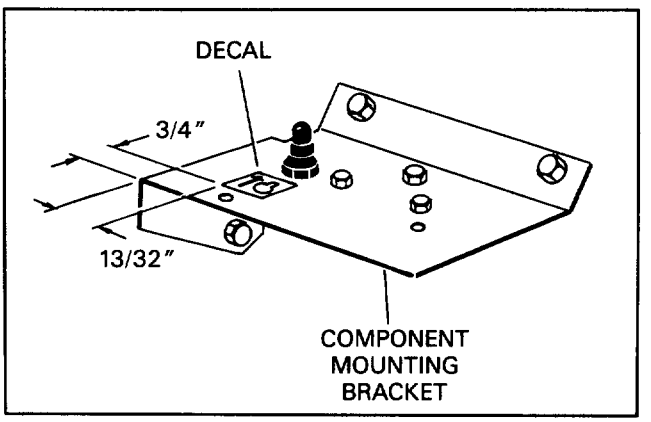

Figure 16

29. Align with the bottom edge and install starter switch decal onto component mounting bracket as shown in fig. 16.

MAINTAINING AND CHARGING BATTERY

Before charging the 12 volt battery, make sure the battery case is not cracked. Also, remove vent caps and look into filler holes. Top of plates must not have ice crystals on them. If ice crystals are evident, do not charge the battery; take battery into warm area (not in living quarters) so it can warm up. After ice crystals are dissolved, battery can be charged.



CAUTION

Charge battery in a well-ventilated area because gases are produced while battery is being charged. Do not inhale the gases because nausea may result. Also, the gases are explosive; therefore, stay away from open flame and electrical spark, and do not smoke while battery is being charged.

1. Connect battery charger to charging plug on snowthrower.

2. Plug charger into a grounded outlet of proper voltage.

3. Charge the battery for 24 to 36 hours or follow the instructions supplied by manufacturer of charger.

4. After battery is charged, remove power cord of charger from wall outlet. Next, disconnect charger from snowthrower.



CAUTION

Charger must be unplugged from wall outlet before connecting charger to or disconnecting charger from battery or a spark could cause the battery to explode.

5. Remove vent caps from battery. Next, check level of electrolyte in each cell. Add drinking water to the battery if electrolyte is not up to the ring at bottom of filler neck. ADD WATER ONLY AFTER CHARGING THE BATTERY. If large quantity of water again has to be added, install vent caps and charge battery again.

NOTE: A connector with two lead wires is provided if it is necessary to use a non plug-in type charger.


TORO