FORM NO. 3311-462 Rev. B

TORO®

MODEL NO. 38100 — 0000001 & UP

PARTS CATALOG

TORO S-140 SNOWTHROWER

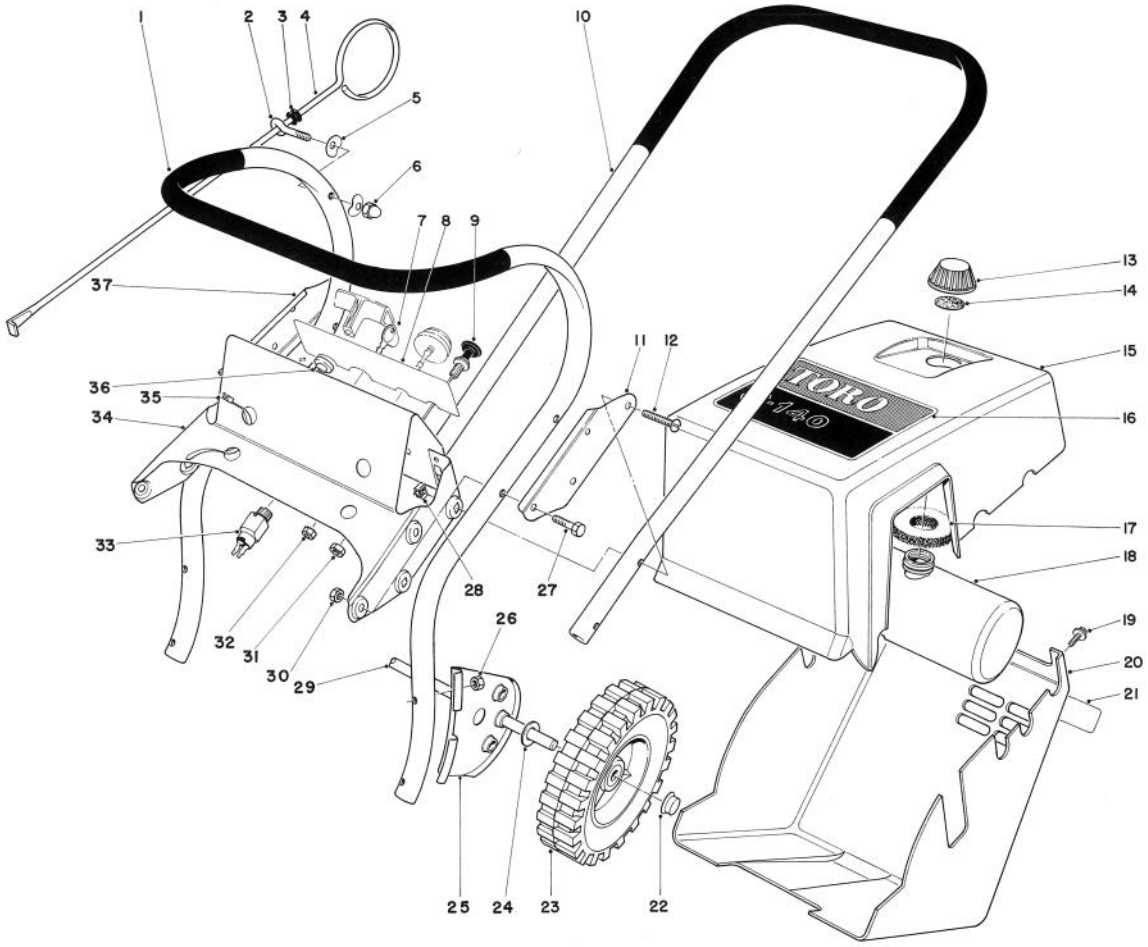

UPPER MAIN FRAME

Ref. No.	Part No.	Description	No. Used
1	33-4480	Lower Handle	1
2	3-9278	Eye Bolt	1
3	237-73	Grommet	1
4	5-3371	Vane Adjustment Rod	1
5	3-7501	Washer	2
6	32111-7	Capnut	1
7	33-2010	Key	2
8	29-5840	Decal Control Panel	1
9	29-5790	Choke Control	1
10	33-4520	Upper Handle	1
11	3-7503	Plate Splice	1
12	32140-100	Round Head Machine Screw	4
13	37-7300	Gas Cap Assy. (Incl. Ref. #14)	1
14	20-4620	Gasket — Gas Cap	1
15	8-2819	Shroud (Incl. Ref. #16)	1
16	37-1270	Decal — Toro	1
17	25-1610	Foam Pad	1
18	8-2829	Gas Tank Assembly (Incl. Ref. #13 & 14)	1
19	12-5450	Screw Special	4

Ref. No.	Part No.	Description	No. Used
20	8-5019	Lower Shroud (Incl. Ref. #21)	1
21	29-5830	Decal — Instruction	1
22	3290-320	Retainer — Push-on	2
23	23-3250	Wheel	2
24	3256-24	Washer	2
25	37-0360	Wheel Bracket	2
26	3217-5	Nut	4
27	321-8	Capscrew	4
28	3290-303	Nut Retainer	4
29	29-7560	Axle	1
30	32152-4	Locknut	4
31	3290-385	PAL Nut	1
32	32149-2	Locknut	1
33	29-5560	On-Off Switch	1
34	6-9839	Tank Support & Control Panel (Incl. Ref. #8)	1
35	3290-336	Gas Tank Strap	2
36	23-7470	Guide — Starter Rope	1
37	3-7504	Splice Plate	1

COPYRIGHT © ALL RIGHTS RESERVED
The Toro Company — 1979, Rev. 1980
MINNEAPOLIS, MN 55420 — U.S.A.

PRICE $1.00

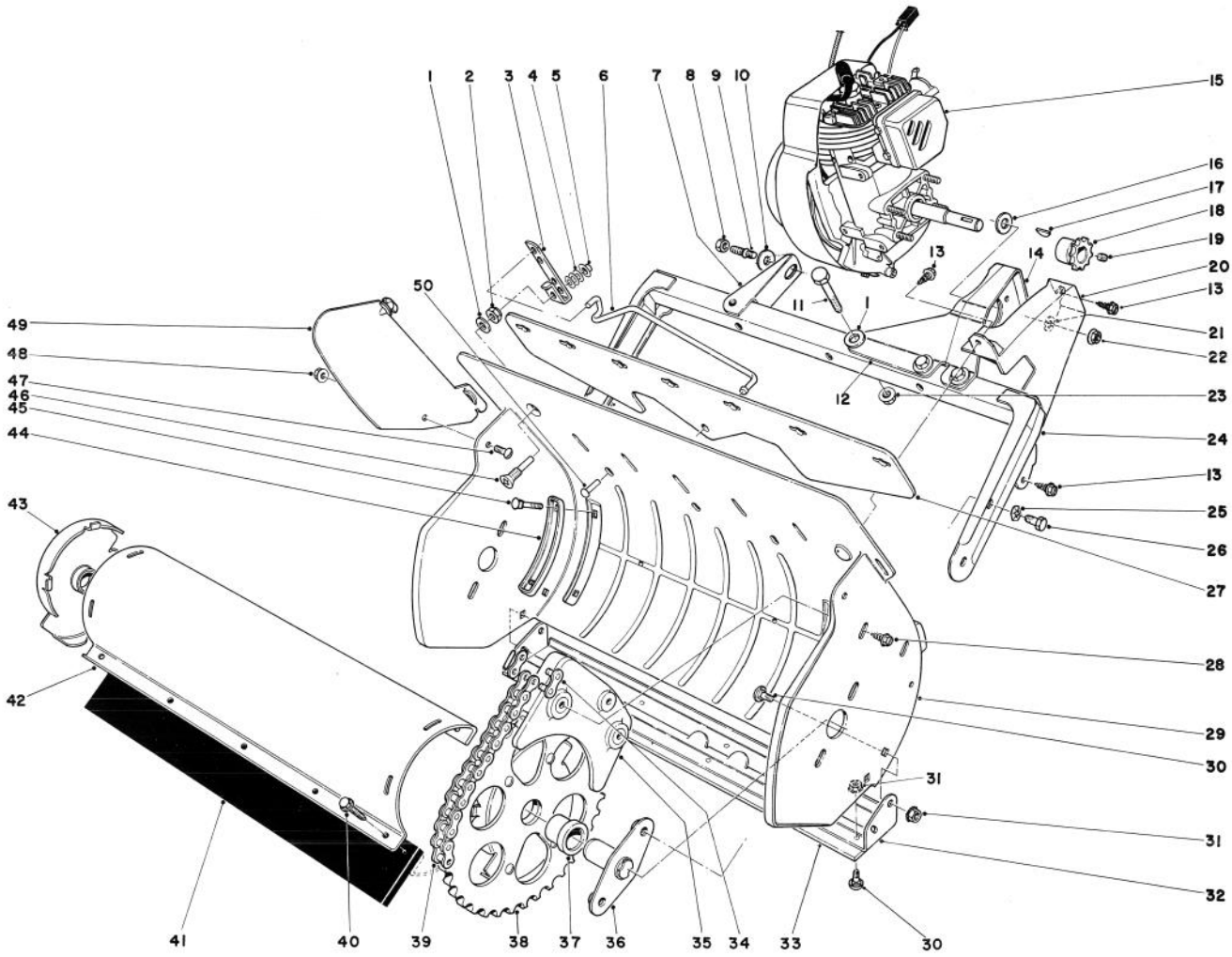

LOWER MAIN FRAME

Ref. No.	Part No.	Description	No. Used
1	3256-2	Washer	5
2	3296-47	Locknut	1
3	28-7870	Bracket Vane Adjustment	1
4	3256-22	Washer	3
5	3290-337	Retainer Push-On	1
6	11-5410	Linkage Vane Adjustment	1
7	39-2330	Frame Bracket	1
8	32152-4	Locknut	1
9	38-8710	Stud	1
10	7-3315	Washer	1
11	321-10	Capscrew	4
12	29-5710	Engine Bracket Internal	1
13	32104-76	Self Tapping Screw	3
14	29-5720	Engine Bracket External	1
15	221-626	Engine (Used on units with Serial No. 0000001 thru 0299999)	1
*	221-663	Engine (Used on units with Serial No. 0300000 thru 0510157)	1
*	221-651	Engine (Used on units with Serial No. 0510158 & up)	1
16	3256-23	Washer	4
17	3257-3	Woodruff Key	1
18	3-9464	Sprocket	1
19	3245-32	Set Screw	2
20	29-5780	Chain Guard	1
21	3255-18	Lockwasher	4
22	32128-13	Flange Locknut	4
23	32128-10	Flange Nut	4
24	29-5850	Frame	1

Ref. No.	Part No.	Description	No. Used
25	3290-257	Pyramidal Washer	4
26	321-3	Screw	4
27	29-7750	Vane Mount	1
28	3314-34	Self Tapping Screw	2
29	29-7740	Housing	1
30	3229-10	Carriage Bolt	7
31	32149-2	Locknut	7
32	37-1200	Scraper Assy. (Incl. Ref. #30-31 & 33)	1
33	37-0340	Scraper	1
34	2710-31	Connecting Link	1
35	5-0997	Stripper Assembly	1
36	27-9710	Rotor Shaft	2
37	11-6160	Rotor Bushing	2
38	11-6080	End Cap Assembly L.H. (Incl. Ref. #37)	1
39	29-5740	Chain	1
40	37-0370	Screw	10
41	11-6130	Blade – Rotor	2
42	11-6110	Shell Rotor	2
43	11-6090	End Cap Assembly R.H. (Incl. Ref. #37)	1
44	3-7498	Handle Plate	2
45	3229-4	Carriage Bolt	4
46	3-7511	Screw Vane Adjustment	1
47	32122-30	Truss Head Screw	2
48	32128-17	Locknut	2
49	39-1540	Vane	7
50	3290-325	Dome Head Rivet	3
*	8-6329	Loose Parts Assembly	1
*	25-9150	Replacement Serial Plate	1

*Not Illustrated

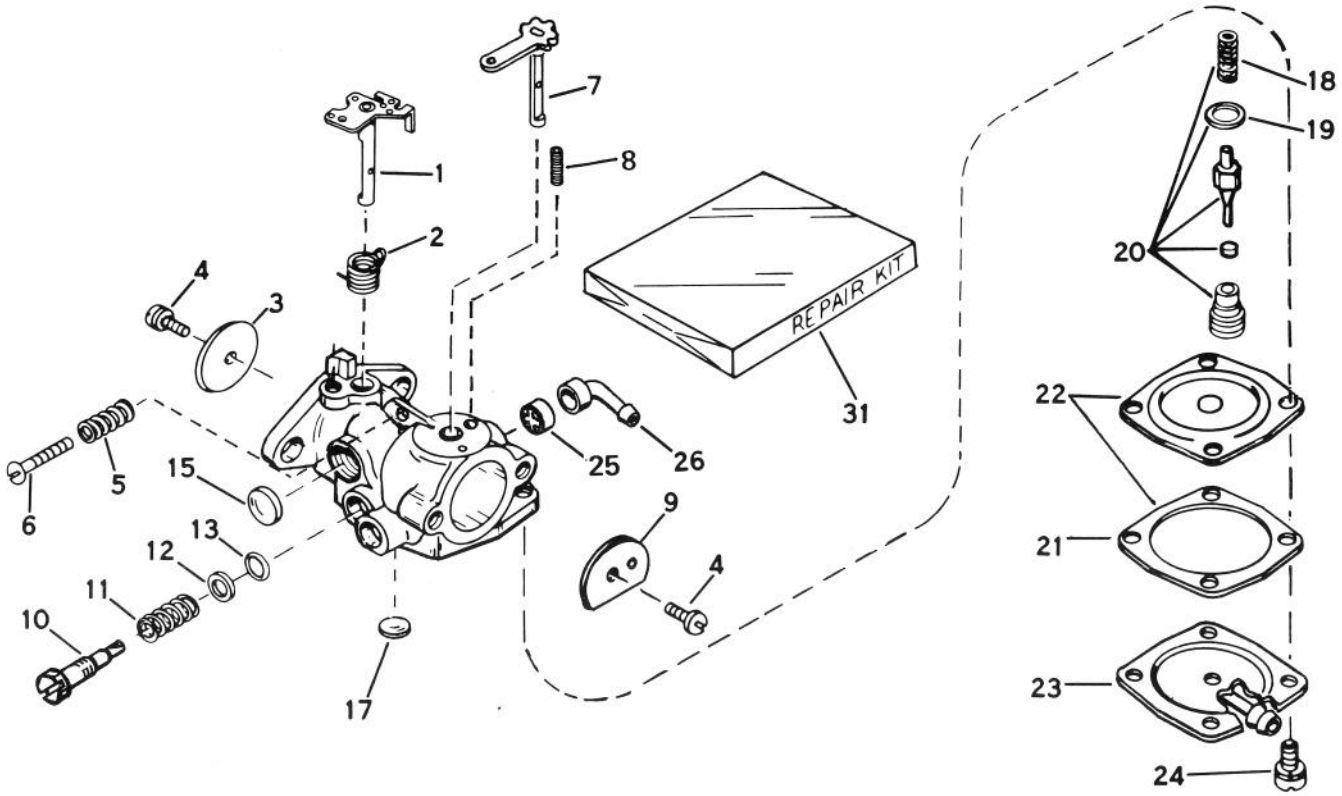

CARBURETOR NO. 632103

Engine Model AH-520 Type 1584A
(Used on units with Serial No. 0000001 thru 0299999)

Ref. No.	Part No.	Description	No. Used
1	631868	Shaft & Lever Assy., Throttle	1
2	631066	Spring, Return	1
3	631036	Shutter, Throttle	1
4	650506	Screw, Throttle & Choke Shutter	2
5	630766	Spring, Idle Speed	1
6	650417	Screw, Idle Regulating	1
7	632036	Shaft & Lever Assy., Choke	1
8	630735	Spring, Choke Positioning	1
9	31837	Shutter, Choke	1
10	632102	Screw, Idle Adjustment	1
11	630738	Spring, Adjustment Screw	1
12	630739	Washer, Adjustment Screw	1
13	*630740	"O" Ring, Adjustment Screw	1
15	*630748	Plug, Welch	1

Ref. No.	Part No.	Description	No. Used
17	*630746	Plug, Welch	2
18	631049	Spring, Valve	1
19	630742	Gasket, Valve Seat	1
20	*630932A	Inlet Needle, Seat, Spring & Gasket Assembly (Incl. Ref. #18 & 19)	1
21	630750	Gasket, Diaphragm	1
22	*630978	Diaphragm Assembly (Incl. Ref. #21)	1
23	631653	Cover, Diaphragm	1
24	650545	Screw, Diaphragm Cover	4
25	631201	Valve, Check	1
26	631808	Fitting, Fuel Inlet	1
31	631893	Repair Kit (Incl. Items Marked *)	1

ENGINE TECUMSEH MODEL NO. AH520, TYPE 1584A

(Used on units with Serial No. 0000001 thru 0299999)

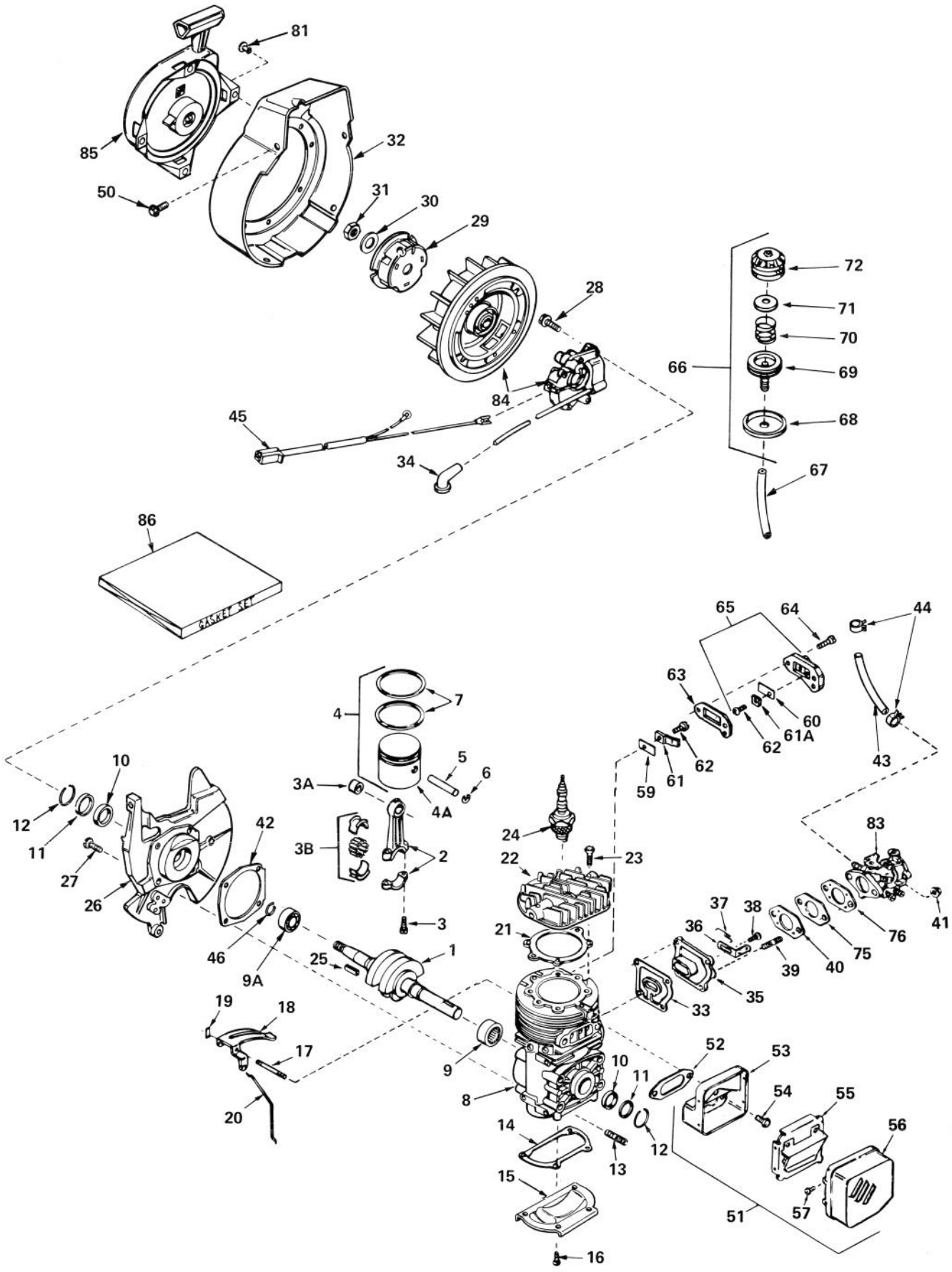

ENGINE TECUMSEH MODEL NO. AH520 TYPE 1584A

(Used on units with Serial No. 0000001 thru 0299999)

Ref. No.	Part No.	Description	No. Used
1	290489	Crankshaft	1
2	310244	Rod Assy., Connecting (Incl. Ref. #3, 3A & 3B)	1
3	650633	Screw, Connecting Rod	2
3A	530104A	Bearing, Cartridge	1
3B	530149	Bearing & Liner Set, Needle	1
4	310259	Piston Assy. (Incl. Ref. #4A thru 7)	1
4A	310230B	Piston	1
5	310178	Pin, Piston	1
6	310167	Ring, Piston Pin Retaining	2
7	310190	Ring Set, Piston	1
8	250271B	Block Assy., Cylinder (Incl. Ref. #9, 10 thru 13, 17 & 40)	1
9	530105	Bearing, Needle	1
9A	530110	Bearing, Ball	1
10	510105	Seal, Crankshaft	2
11	510106A	Retainer, Crankshaft Seal	2
12	510109A	Spring, Crankshaft Seal Retainer	2
13	650796	Stud	4
14	*510270	Gasket, Cover	1
15	570370A	Plate, Cover	1
16	650579	Screw, Pan Flex Hd.	4
17	490276	Shaft, Air Vane	1
18	490287	Vane Assy., Air	1
19	490278	Clip, Air Vane	1
20	490289	Link, Governor	1
21	*510274	Gasket, Cylinder Head	1
22	250240A	Head, Cylinder	1
23	650477	Screw, Pan Flex Hd.	4
24	611005	Plug, Spark (RJ-18Y or equivalent)	1
25	610961	Key, Flywheel	1
26	350388	Base Assy., Shroud (Incl. Ref. #10, 11 & 12)	1
27	650497	Screw, Pan Flex Hd.	4
28	650747	Screw, Hex Washer Hd.	2
29	590416	Cup, Starter	1
30	650763	Washer, Spring	1
31	650390	Nut, Flywheel	1
32	350391	Housing, Blower	1
33	*510312	Gasket, Port	1
34	610118	Cover, Spark Plug	1
35	570471	Adapter, Cover	1
36	570633	Lever, Adjusting	1
37	490286	Spring, Adjusting Lever	1
38	650576	Screw, Pan Flex Hd.	4
39	650527	Stud, Carburetor	2
40	*510229	Gasket, Carburetor (1/8" thick)	1

Ref. No.	Part No.	Description	No. Used
41	650457	Nut, Hex	2
42	*510292	Gasket, Shroud Base	1
43	29774	Line, Fuel	1
44	26460	Clamp, Fuel Line	2
45	610999	Harness, Wire	1
46	570630	Ring, Retaining	1
50	650356	Screw, Hex Washer Hd. Powerlok Thread	4
51	390294	Muffler Assy. (Incl. Ref. # 53 thru 57)	1
52	*510230	Gasket, Exhaust	1
53	390292	Base, Muffler	1
54	650497	Screw, Pan Flex Hd.	3
55	390295	Baffle, Muffler	1
56	390296	Cover, Muffler	1
57	650578	Screw, Hex Hd., S.T. Type "B"	4
59	470136	Reed, Compression Release	1
60	470135	Reed, Compression Release	1
61	470151	Plate, Reed Hold Down	1
61A	470137	Plate, Reed Hold Down	1
62	650654	Screw, Pan Hd. Taptite	2
63	*510263	Gasket, Compression Release	1
64	650576	Screw, Pan Flex Hd.	2
65	570437A	Cover Assy., Compression Release (Incl. Ref. #60, 61A & 62)	1
66	570629A	Primer Assy. (Incl. Ref. # 68 thru 72)	1
67	32180B	Line, Primer	1
68	32312	Retainer, Primer Bulb	1
69	32184	Body, Primer	1
70	570443	Spring, Primer Bulb	1
71	570444	Washer, Primer Bulb	1
72	570442A	Bulb, Primer	1
75	570438A	Spacer	1
76	*510241	Gasket, Carburetor (1/16" thick)	
81		Rivet, Pop (3/16" dia.) (Can be purchased locally.)	4
83	632103	Carburetor (Incl. Ref. #76)	1
84	610794A	Magneto (The complete magneto is not available as an assembly. The magneto number is shown for reference purposes only. Order component parts individually as shown in parts list.)	1
85	590537	Starter Assy., Rewind	1
86	510264D	Gasket Set (Incl. items marked *)	1

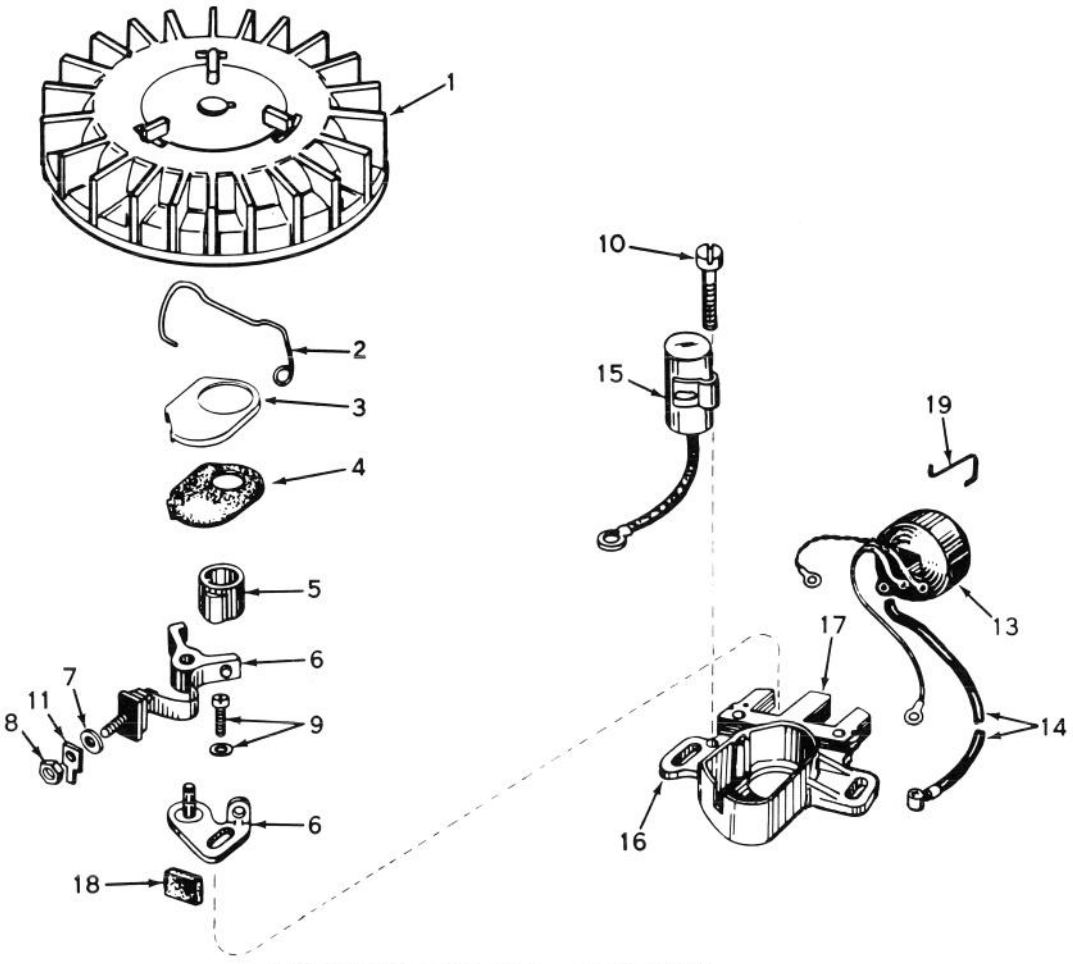

*MAGNETO NO. 610794A

Engine Model No. AH520 Type 1584A
(Used on units with Serial No. 0000001 thru 0299999)
Engine Model No. AH520 Type 1584B
(Used on units with Serial No. 0300000 thru 0510157)

Ref. No.	Part No.	Description	No. Used
1	610781A	Flywheel (Incl. Ref. #3 & 4)	1
2	30551	Spring, Breaker Box Dust Cover	1
3	610947	Cover, Breaker Box Dust	1
4	610948	Gasket, Dust Cover	1
5	30552	Cam, Breaker	1
6	30547A	Breaker Assembly	1
7	610385	Washer, Terminal	1
8	610408	Nut, Terminal	1
9	29181	Screw & Washer Assy., Breaker	1
10	610593	Screw, Condenser Fastening	1

Ref. No.	Part No.	Description	No. Used
11	33356	Tab, Ground Terminal	1
13	30560A	Coil Assembly (Incl. Ref. #14)	1
14	30554	Wire, Ignition Lead	1
15	30548B	Condenser	1
16	30545	Core & Plate Group	1
17	30561B	Stator Assembly (Incl. Ref. #2, 3, 4, 6 thru 11, 13, 15, 16, 18 & 19)	1
18	30549	Felt, Cam Wiper	1
19	31311	Clip, Coil Locking	1

*The complete magneto is not available as an assembly. The magneto number is shown for reference purpose only. Order component parts individually, as shown in parts list.

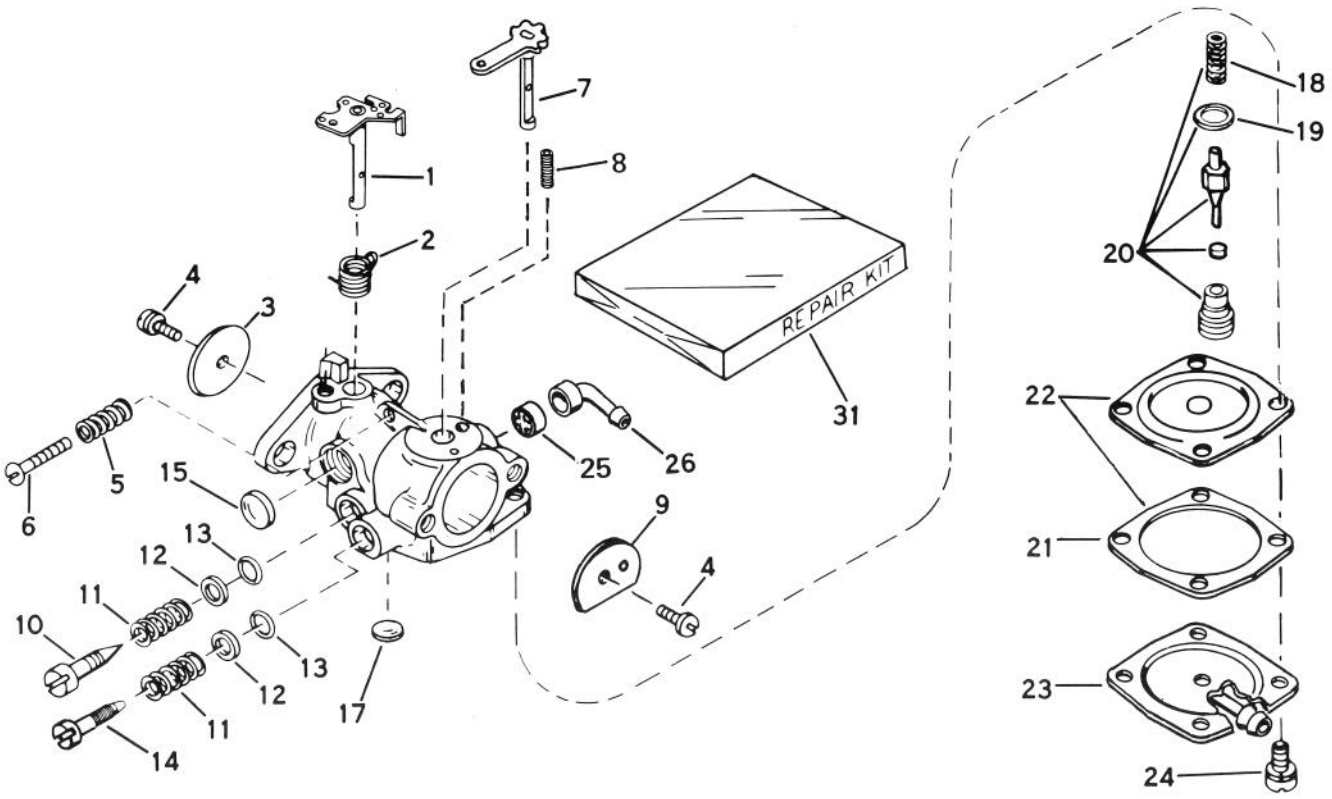

CARBURETOR NO. 632035

Engine Model No. AH520, Type 1584B
(Used on units with Serial No. 0300000 thru 0510157)

Ref. No.	Part No.	Description	No. Used
1	631868	Shaft & Lever Assy., Throttle	1
2	631066	Spring, Return	1
3	631036	Shutter, Throttle	1
4	650506	Screw, Throttle & Choke Shutter	2
5	630766	Spring, Idle Speed	1
6	650417	Screw, Idle Regulating	1
7	632036	Shaft & Lever Assy., Choke	1
8	630735	Spring, Choke Positioning	1
9	31837	Shutter, Choke	1
10	631562	Screw, Idle Adjustment	1
11	630738	Spring, Adjustment Screw	2
12	630739	Washer, Adjustment Screw	2
13	*630740	"O" Ring, Adjustment Screw	2
14	630898	Screw, Main Adjustment	1

Ref. No.	Part No.	Description	No. Used
15	*630748	Plug, Welch	1
17	*630746	Plug, Welch	2
18	631049	Spring, Valve	1
19	630742	Gasket, Valve Seat	1
20	*630932A	Inlet Needle, Seat, Spring & Gasket Assembly (Incl. Ref. #18 & 19)	1
21	630750	Gasket, Diaphragm	1
22	*630978	Diaphragm Assy. (Incl. Ref. #21)	1
23	631653	Cover, Diaphragm	1
24	650545	Screw, Diaphragm Cover	4
25	631201	Valve, Check	1
26	631808	Fitting, Fuel Inlet	1
31	631893	Repair Kit (Incl. Items Marked *)	1

ENGINE TECUMSEH MODEL NO. AH520 TYPE 1584B

(Used on units with Serial No. 0300000 thru 0510157)

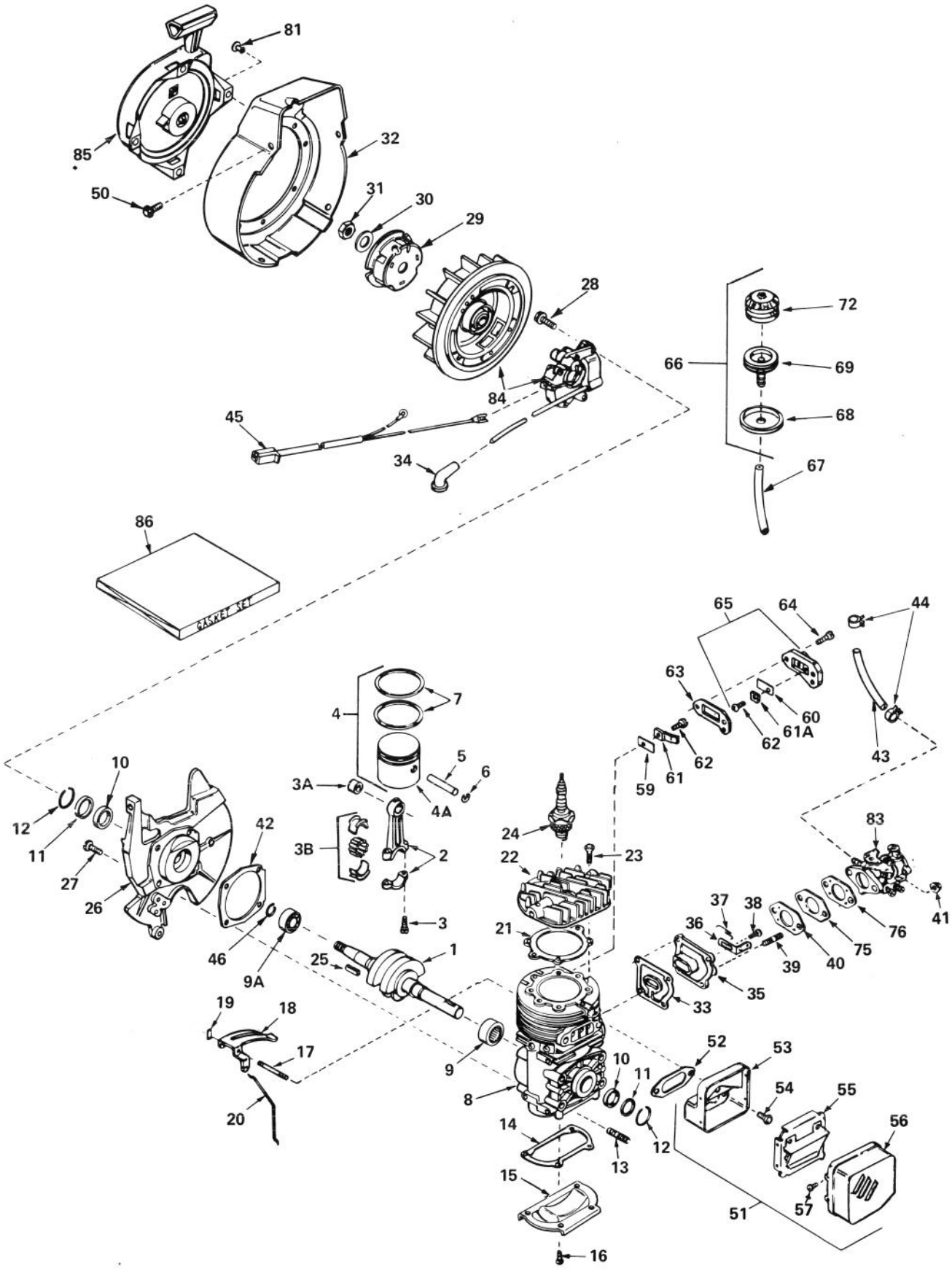

ENGINE TECUMSEH MODEL NO. AH520 TYPE 1584B

(Used on units with Serial No. 0300000 thru 0510157)

Ref. No.	Part No.	Description	No. Used
1	290489	Crankshaft	1
2	310244	Rod Assy., Connecting (Incl. Nos. 3, 3A, & 3B)	1
3	650633	Screw, Connecting Rod	2
3A	530104A	Bearing, Cartridge	1
3B	530149	Bearing & Liner Set, Needle	1
4	310259	Piston Assy. (Incl. Nos. 4A thru 7)	1
4A	310230B	Piston	1
5	310178	Pin, Piston	1
6	310167	Ring, Piston Pin Retaining	2
7	310190	Ring Set, Piston	1
8	250271B	Block Assy., Cylinder (Incl. Nos. 9, 10 thru 13, 17 & 40)	1
9	530105	Bearing, Needle	1
9A	530110	Bearing, Ball	1
10	510105	Seal, Crankshaft	2
11	510106A	Retainer, Crankshaft seal	2
12	510109A	Spring, Crankshaft Seal Retainer	2
13	650796	Stud	4
14	*510270	Gasket, Cover	1
15	570370A	Plate, Cover	1
16	650579	Screw, Pan Flex Hd.	4
17	490276	Shaft, Air Vane	1
18	490287	Vane Assy., Air	1
19	490278	Clip, Air Vane	1
20	490289	Link, Governor	1
21	*510274	Gasket, Cylinder Head	1
22	250240A	Head, Cylinder	1
23	650477	Screw, Pan Flex Hd.	4
24	611005	Plug, Spark (RJ-18Y or equivalent)	1
25	610961	Key, Flywheel	1
26	350388	Base Assy., Shroud (Incl. Nos. 10, 11 & 12)	1
27	650497	Screw, Pan Flex Hd.	4
28	650747	Screw, Hex Washer Hd.	2
29	590416	Cup, Starter	1
30	650763	Washer, Spring	1
31	650390	Nut, Flywheel	1
32	350391	Housing, Blower	1
33	*510312	Gasket, Port	1
34	610118	Cover, Spark Plug	1
35	570471	Adapter, Cover	1
36	570633	Lever, Adjusting	1
37	490286	Spring, Adjusting Lever	1
38	650576	Screw, Pan Flex Hd.	4

Ref. No.	Part No.	Description	No. Used
39	650527	Stud, Carburetor	2
40	*510229	Gasket, Carburetor (1/8" thick)	1
41	650457	Nut, Hex	2
42	*510292	Gasket, Shroud Base	1
43	29774	Line, Fuel	1
44	26460	Clamp, Fuel Line	2
45	610999	Harness, Wire	1
46	570630	Ring, Retaining	1
50	650356	Screw, Hex Washer Hd. Powerlok Thread	4
51	390294	Muffler Assy. (Incl. Nos. 53 thru 57)	1
52	*510230	Gasket, Exhaust	1
53	390292	Base, Muffler	1
54	650497	Screw, Pan Flex Hd.	3
55	390295	Baffle, Muffler	1
56	390296	Cover, Muffler	1
57	650578	Screw, Hex Hd. S.T. Type "B"	4
59	470136	Reed, Compression Release	1
60	470135	Reed, Compression Release	1
61	470151	Plate, Reed hold down	1
61A	470137	Plate, Reed hold down	1
62	650654	Screw, Pan Hd. Taptite	2
63	*510263	Gasket, Compression Release	1
64	650576	Screw, Pan Flex Hd.	2
65	570437A	Cover Assy., Comp. Release (Incl. Nos. 60, 61A & 62)	1
66	570629A	Primer Assembly (Incl. Nos. 68 thru 72)	1
67	32180B	Line, Primer	1
68	32312	Retainer, Primer Bulb	1
69	32184	Body, Primer	1
72	570442A	Bulb, Primer	1
75	570438A	Spacer	1
76	*510241	Gasket, Carburetor (1/16" thick)	
81		Rivet, Pop (3/16" dia.) (Can be purchased locally.)	4
83	632035	Carburetor (Incl. No. 76)	1
84	610794A	Magneto (The complete magneto is not available as an assembly. The magneto number is shown for reference purposes only. Order component parts individually as shown in parts list.)	1
85	590537	Starter Assy., Rewind	1
86	510264D	Gasket Set (Incl. items marked *)	1

ENGINE TECUMSEH MODEL NO. AH520, TYPE 1601

(Used on units with Serial No. 0510158 & up)

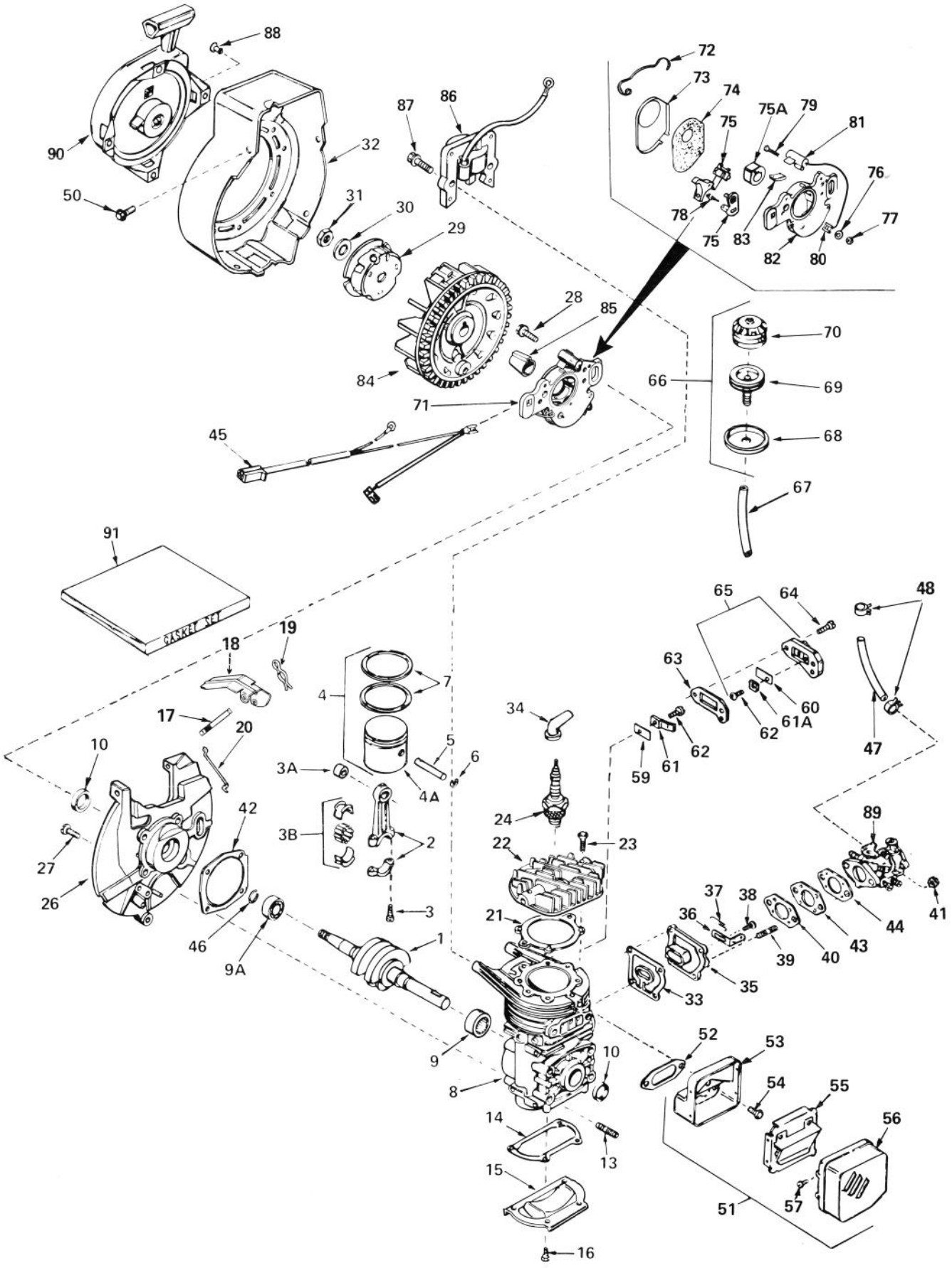

ENGINE TECUMSEH MODEL NO. AH520, TYPE 1601

(Used on units with Serial No. 0510158 & up)

Ref. No.	Part No.	Description	No. Used
1	290497	Crankshaft	1
2	310244	Rod Assy., Connecting (Incl. Ref. #3, 3A & 3B)	1
3	650633	Screw, Connecting Rod	1
3A	530104A	Bearing, Cartridge	1
3B	530149	Bearing & Liner Set, Needle	1
4	310259	Piston Assy. (Incl. Ref. #4A thru 7)	1
4A	310230B	Piston	1
5	310178	Pin, Piston	1
6	310167	Ring, Piston Pin Retaining	1
7	310190	Ring Set, Piston	1
8	250278	Block Assy., Cylinder (Incl. Ref. #9, 10 & 13)	1
9	530105	Bearing, Needle	1
9A	530110	Bearing, Ball	1
10	510319	Seal, Crankshaft	1
13	650796	Stud	1
14	*510270	Gasket, Cover	1
15	570370A	Plate, Cover	1
16	650579	Screw, Pan Flex Hd.	1
17	490295	Shaft, Air Vane	1
18	490296	Vane Assy., Air	1
19	490278	Clip, Retainer	1
20	490292	Link, Governor	1
21	*510274	Gasket, Cylinder Head	1
22	250240A	Head, Cylinder	1
23	650477	Screw, Pan Flex Hd.	1
24	611005	Plug, Spark (RJ-18Y or Equivalent)	1
26	350402	Base Assy., Blower Housing (Incl. Ref. #10 & 17)	1
27	650497	Screw, Pan Flex Hd.	1
28	650747	Screw, Hex Washer Hd.	1
29	590551	Cup, Starter	1
30	650763	Washer, Spring	1
31	650390	Nut, Flywheel	1
32	350397	Housing, Blower	1
33	*510312	Gasket, Port	1
34	610118	Cover, Spark Plug	1
35	570471	Adapter Assy. (Incl. Ref. #39)	1
36	570626	Lever, Adjusting	1
37	490293	Spring, Adjusting Lever	1
38	650576	Screw, Pan Flex Hd.	1
39	650527	Stud, Carburetor	1
40	*510229	Gasket, Carburetor (1/8" thick)	1
41	650457	Nut, Hex	1
42	*510292	Gasket, Housing Base	1
43	570438A	Spacer	1
44	*510241	Gasket, Carburetor (1/16" thick)	1
45	611012	Harness, Wire	1
46	*570630	Ring, Retaining	1
47	29774	Line, Fuel	1
48	26460	Clamp, Fuel Line	1
50	650356	Screw, Hex Washer Hd. Power-lok Thread	1
51	390294	Muffler Assembly (Incl. Ref. #53 thru 57)	1
52	*510230	Gasket, Exhaust	1
53	390292	Base, Muffler	1
54	650497	Screw, Pan Flex Hd.	1
55	390295	Baffle, Muffler	1
56	390296	Cover, Muffler	1
57	650578	Screw, Hex Hd. S.T. Type "B"	1
59	470136	Reed, Compression Release	1
60	470135	Reed, Compression Release	1
61	470151	Plate, Reed Hold Down	1
61A	470137	Plate, Reed Hold Down	1
62	650654	Screw, Pan Hd. Taptite	1
63	*510263	Gasket, Compression Release	1
64	650576	Screw, Pan Flex Hd.	1
65	570437A	Cover Assembly, Compression Release (Incl. Ref. #60, 61A & 62)	1
66	570629A	Primer Assembly (Incl. Ref. #68, 69 & 70)	1
67	32180B	Line, Primer	1
68	32312	Retainer, Primer Bulb	1
69	32184	Body, Primer	1
70	570442A	Bulb, Primer	1
71	611006	Stator Plate Assembly (Incl. Ref. #72 & 75 thru 83)	1
72	30551	Spring, Breaker Box Cover	1
73	610947	Cover, Dust	1
74	30883	Gasket, Dust Cover	1
75	30547B	Contact Assembly, Breaker	1
75A	30552	Cam, Breaker	1
76	610385	Washer	1
77	610408	Nut	1
78	29181	Breaker Fastening Screw & Washer	1
79	610593	Condenser Fastening Screw	1
80	33356	Terminal, Ground	1
81	30548B	Condenser	1
82	611008	Plate, Stator	1
83	30549	Felt, Cam Wiper	1
84	611007	Flywheel	1
85	611014	Sleeve, Flywheel	1
86	34431	Lamination & Coil Assy. (Incl. Ref. #34)	1
87	650814	Screw, Hex Hd. Sems.	1
88		Rivet, Pop (3/16"dia.) (Can be purchased locally)	1
89	632141	Carburetor (Incl. Ref. #44)	1
90	590537	Starter Assembly, Rewind	1
91	510264D	Gasket Set (Incl. Items Marked *)	1

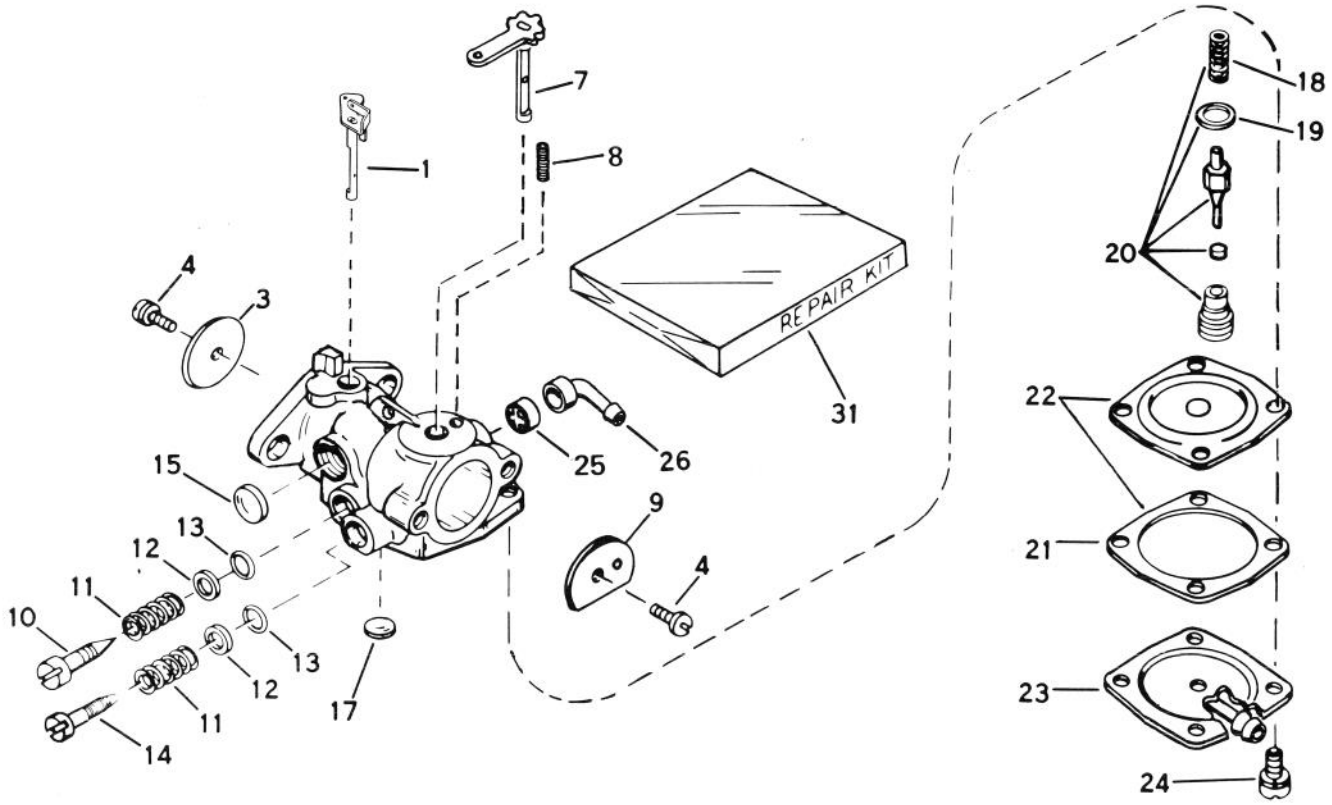

CARBURETOR NO. 632141

Engine Model No. AH520, Type 1601
(Used on units with Serial No. 0510158 & up)

Ref. No.	Part No.	Description	No. Used
1	632126	Shaft & Lever Assy., Throttle	1
3	631036	Shutter, Throttle	1
4	650506	Screw, Throttle & Choke Shutter	1
7	632036	Shaft & Lever Assy., Choke	1
8	630735	Spring, Choke Positioning	1
9	31837	Shutter, Choke	1
10	631562	Screw, Idle Adjustment	1
11	630738	Spring, Adjustment Screw	1
12	630739	Washer, Adjustment Screw	1
13	*630740	"O" Ring, Adjustment Screw	1
14	630898	Screw, Main Adjustment	1
15	*630748	Plug, Welch	1
17	*630746	Plug, Welch	1

Ref. No.	Part No.	Description	No. Used
18	631049	Spring, Valve	1
19	630742	Gasket, Valve Seat	1
20	*630932A	Inlet Needle, Seat, Spring & Gasket Assembly (Incl. Ref. #18 & 19)	1
21	630750	Gasket, Diaphragm	1
22	*630978	Diaphragm Asssembly (Incl. Ref. #21)	1
23	631653	Cover Assembly, Diaphragm	1
24	650817	Screw, Diaphragm Cover	1
25	631201	Valve, Check	1
26	631808	Fitting, Fuel Inlet	1
31	631893	Repair Kit (Incl. Items Marked *)	1

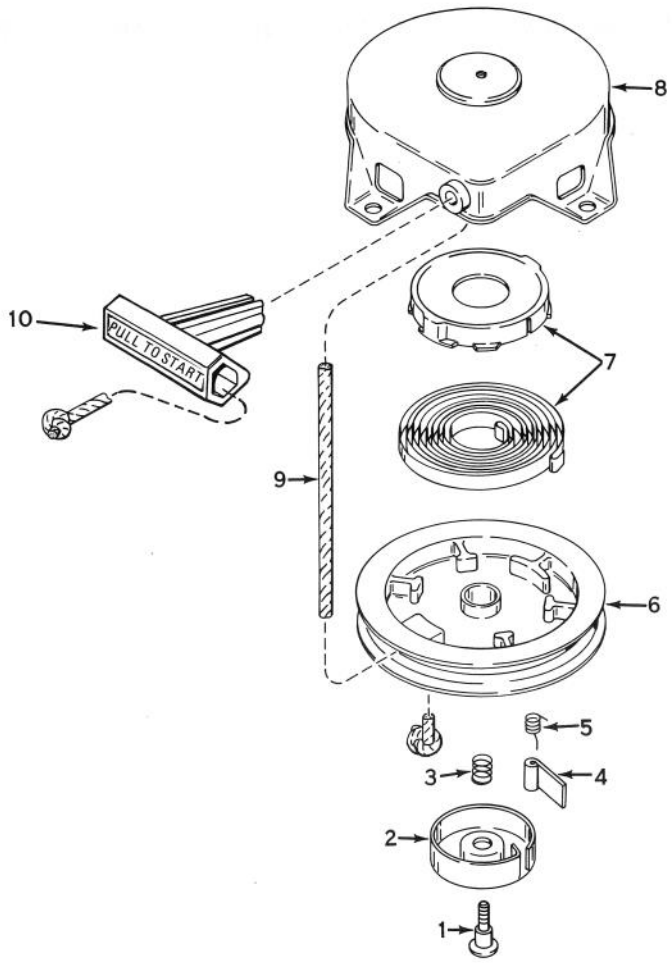

REWIND STARTER NO. 590537

Engine Model No. AH520 Type 1584A (Used on units with Serial No. 0000001 thru 0299999)
Engine Model No. AH520 Type 1584B (Used on units with Serial No. 0300000 thru 0510157)
Engine Model No. AH520 Type 1601 (Used on units with Serial No. 0510158 & up)

Ref. No.	Part No.	Description	No. Used
1	590409A	Screw, Retaining	1
2	590410	Retainer, R.H.	1
3	590411	Spring, Brake	1
4	590148	Dog, Starter	1
5	590412	Spring, R.H. Dog	1

Ref. No.	Part No.	Description	No. Used
6	590413A	Pulley	1
7	590414	Spring & Keeper Assy.	1
8	590536	Housing Assy., Starter	1
9	590535	Rope, Starter	1
10	590452	Handle Assy., Starter	1

The Toro Promise

A ONE YEAR LIMITED WARRANTY

The Toro Company promises to repair any TORO Product if defective in materials or workmanship. The following time periods from the date of purchase apply:

Residential Product	1 Year
Residential Products Used Commercially . . .	45 Days

The costs of parts and labor are included, but the customer pays the transportation costs. Just return any residential product to an Authorized TORO Service Dealer or TORO Distributor.

Should you feel your TORO Product is defective and wish to rely on The Toro Promise, the following procedure is recommended:

1. Contact any Authorized TORO Service Dealer, TORO Master Service Dealer, or TORO Distributor (the Yellow Pages of your telephone directory is a good reference source).
2. He will either instruct you to return the product to him or recommend another Authorized TORO Service outlet which might be more convenient.
3. Bring the product along with your original sales slip, or other evidence of purchase date, to the service dealer.
4. The servicing dealer will inspect the unit, advise you whether the product is defective and, if so, make all repairs necessary to correct the defect without extra charge to you.

If for any reason you are dissatisfied with the dealer's analysis of the defect or the service performed, you may contact us.

Write:

TORO Consumer Service Department
8111 Lyndale Avenue South
Minneapolis, Minnesota 55420

The above remedy of product defects through repair by an Authorized TORO Service Dealer is the purchaser's sole remedy for any defect.

THERE IS NO OTHER EXPRESS WARRANTY. ALL IMPLIED WARRANTIES OF MERCHANTABILITY AND FITNESS FOR USE ARE LIMITED TO THE DURATION OF THE EXPRESS WARRANTY.

Some states do not allow limitations on how long an implied warranty lasts, so the above limitation may not apply to you.

This warranty applies only to parts or components which are defective and does not cover repairs necessary due to normal wear, misuse, accidents, or lack of proper maintenance. Regular, routine maintenance of the unit to keep it in proper operating condition is the responsibility of the owner.

All warranty repairs reimbursable under The Toro Promise must be performed by an Authorized TORO Service Dealer using Toro approved replacement parts.

Repairs or attempted repairs by anyone other than an Authorized TORO Service Account are not reimbursable under The Toro Promise. In addition, these unauthorized repair attempts may result in additional malfunctions, the correction of which is not covered by warranty.

THE TORO COMPANY IS NOT LIABLE FOR INDIRECT, INCIDENTAL OR CONSEQUENTIAL DAMAGES IN CONNECTION WITH THE USE OF THE PRODUCT INCLUDING ANY COST OR EXPENSE OF PROVIDING SUBSTITUTE EQUIPMENT OR SERVICE DURING PERIODS OF MALFUNCTION OR NON-USE.

Some states do not allow the exclusion or limitation of incidental or consequential damages, so the above limitation or exclusion may not apply to you.

This warranty gives you specific legal rights, and you may also have other rights which vary from state to state.

COUNTRIES OTHER THAN THE UNITED STATES OR CANADA

Customers who have purchased TORO products exported from the United States or Canada should contact their TORO Distributor (Dealer) to obtain guarantee policies for your country, province or state. If for any reason you are dissatisfied with your Distributor's service or have difficulty obtaining guarantee information, contact the TORO importer. If all other remedies fail, you may contact us at The Toro Company.

International Group
Service Department
One Corporate Center
7401 Metro Boulevard
Minneapolis, Minnesota 55435 U.S.A.

Compliance with Radio Interference Regulations Certified.
Certifie Conforme au Reglement sur le Brouillage Radioelectrique.

PRODUCT CHANGES

In an effort to make improvements available to TORO owners as quickly as possible, minor changes are incorporated into Toro's products from time to time that do not become immediately shown in the Parts Catalog. If such a change apparently has been made in your unit, which is not reflected in your manual, see your TORO Distributor or his Authorized TORO Service Dealer for information and part numbers.

IDENTIFICATION AND ORDERING

Model and Serial Numbers

The S-140 has two identification numbers: a model number and a serial number. The two numbers are stamped on a decal which is located on top right hand side of frame. In any correspondence concerning the S-140 supply model and serial numbers to assure that correct information and replacement parts are obtained.

To order replacement parts from an Authorized TORO Service Dealer, supply the following information:

1. Model and serial numbers of the S-140.
2. Part number, description, and quantity of part(s) desired.

Note: Do not order by reference number if a parts catalog is being used; use the PART NUMBER.

Keep Your TORO All Toro Genuine TORO PARTS & ACCESSORIES ***Insist on Genuine Toro Parts***

MAINTENANCE RECORD

Date	Hours Used	Check Scraper	Check Chain	Check Spark Plug	Preparing For Storage	Comments

MAINTENANCE RECORD

Date	Hours Used	Check Scraper	Check Chain	Check Spark Plug	Preparing For Storage	Comments