Form No. 3327-570

TORO®

Mid–Size Mower

ProLine Gear 15 hp with 48″ Side Discharge Mower

Model No. 30523—Serial No. 220000001 and Up

Operator’s Manual

English (EN)

Warning

The engine exhaust from this product contains chemicals known to the State of California to cause cancer, birth defects, or other reproductive harm.

Important This engine is not equipped with a spark arrester muffler. It is a violation of California Public Resource Code Section 4442 to use or operate this engine on any forest-covered, brush-covered, or grass-covered land. Other states or federal areas may have similar laws.

This spark ignition system complies with Canadian ICES-002.

Ce système d'allumage par étincelle de véhicule est conforme à la norme NMB-002 du Canada.

The enclosed Engine Owner's Manual is supplied for information regarding The U.S. Environmental Protection Agency (EPA) and the California Emission Control Regulation of emission systems, maintenance, and warranty.

Keep this engine Owner's Manual with your mower. Should this engine Owner's Manual become damaged or illegible, replace immediately. Replacements may be ordered through the engine manufacturer.

Contents

	Page
Introduction	3
Safety	3
Safe Operating Practices	3
Toro Mower Safety	5
Slope Chart	7
Safety and Instruction Decals	9
Gasoline and Oil	12
Recommended Gasoline	12
Using Fuel Stabilizer/Conditioner	12
Filling the Fuel Tank	12
Checking the Engine Oil Level	12
Setup	13
Loose Parts	13
Installing the Front Casters	13
Installing the Upper Handle and Wire Harness	14
Installing the Control Rods	14
Adjusting the Parking Brakes	15
Connecting the Throttle Cable	15
Installing the Blade Control (PTO) Rod	16
Installing the Shift Lever	16
Installing the Fuel Tank	16
Installing the Muffler	17
Operation	17
Think Safety First	17
Controls	18
Operating the Parking Brake and Neutral Locks	18
Starting the Engine	19
Stopping the Engine	19
Operating the Blade Control (PTO) Lever	19
Understanding the Safety Interlock System	19
Driving Forward or Backward	20
Stopping the Mower	20
Transporting the Mower	21
Side Discharging or Mulching the Grass	21
Adjusting the Wheel Drive Tension	21
Adjusting the Height-of-Cut	21
Height-of-Cut Chart	23
Maintenance	24
Recommended Maintenance Schedule	24
Servicing the Cutting Blades	25
Servicing the Air Cleaner	26
Servicing the Engine Oil	27
Servicing the Spark Plugs	29
Checking the Tire Pressure	30
Cleaning the Cooling System	30
Greasing and Lubrication	30
Servicing the Brakes	31
Draining the Fuel Tank	31
Servicing the Fuel Filter	32
Checking the Belts	32
Replacing the Drive Belt	32
Replacing the Traction Belt	33
Replacing the Mower Belt	33
Adjusting the Mower Belt Tension	34
Adjusting the Blade Brake	34
Adjusting the Grass/Mud Scraper	35
Replacing the Grass Deflector	35
Wiring Diagram	36
Cleaning and Storage	37
Troubleshooting	38
The Toro Total Coverage Guarantee	40

© 2002 by The Toro Company
8111 Lyndale Avenue South
Bloomington, MN 55420-1196

All Rights Reserved

Printed in the USA

Introduction

Read this manual carefully to learn how to operate and maintain your product properly. The information in this manual can help you and others avoid injury and product damage. Although Toro designs and produces safe products, you are responsible for operating the product properly and safely.

Whenever you need service, genuine Toro parts, or additional information, contact an Authorized Service Dealer or Toro Customer Service and have the model and serial numbers of your product ready. Figure 1 illustrates the location of the model and serial numbers on the product.

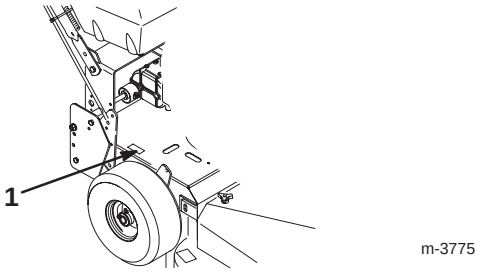

Figure 1

1. Location of the model and serial numbers

Write the product model and serial numbers in the space below:

Model No. _____

Serial No. _____

This manual identifies potential hazards and has special safety messages that help you and others avoid personal injury and even death. ***Danger***, ***Warning***, and ***Caution*** are signal words used to identify the level of hazard. However, regardless of the hazard, be extremely careful.

Danger signals an extreme hazard that *will* cause serious injury or death if you do not follow the recommended precautions.

Warning signals a hazard that *may* cause serious injury or death if you do not follow the recommended precautions.

Caution signals a hazard that may cause minor or moderate injury if you do not follow the recommended precautions.

This manual uses two other words to highlight information. **Important** calls attention to special mechanical information and **Note:** emphasizes general information worthy of special attention.

Safety

This machine meets or exceeds the B71.4–1999 specifications of the American National Standards Institute in effect at the time of production.

Note: The addition of attachments made by other manufacturers that do not meet American National Standards Institute certification will cause noncompliance of this machine.

Improper use or maintenance by the operator or owner can result in injury. To reduce the potential for injury, comply with these safety instructions and always pay attention to the safety alert ⚠ symbol, which means CAUTION, WARNING, or DANGER—"personal safety instruction." Failure to comply with the instruction may result in personal injury or death.

Safe Operating Practices

The following instructions are from ANSI standard B71.4–1999.

Training

- Read the Operator's Manual and other training material. If the operator(s) or mechanic(s) can not read English it is the owner's responsibility to explain this material to them.
- Become familiar with the safe operation of the equipment, operator controls, and safety signs.
- All operators and mechanics should be trained. The owner is responsible for training the users.
- Never let children or untrained people operate or service the equipment. Local regulations may restrict the age of the operator.
- The owner/user can prevent and is responsible for accidents or injuries occurring to himself or herself, other people or property.

Preparation

- Evaluate the terrain to determine what accessories and attachments are needed to properly and safely perform the job. Only use accessories and attachments approved by the manufacturer.
- Wear appropriate clothing including hard hat, safety glasses and ear protection. Long hair, loose clothing or jewelry may get tangled in moving parts.
- Inspect the area where the equipment is to be used and remove all objects such as rocks, toys and wire which can be thrown by the machine.

- Use extra care when handling gasoline and other fuels. They are flammable and vapors are explosive.
    - Use only an approved container.
    - Never remove gas cap or add fuel with engine running. Allow engine to cool before refueling. Do not smoke.
    - Never refuel or drain the machine indoors.
- Check that operator's presence controls, safety switches and shields are attached and functioning properly. Do not operate unless they are functioning properly.

Operation

- Never run an engine in an enclosed area.
- Only operate in good light, keeping away from holes and hidden hazards.
- Be sure all drives are in neutral and parking brake is engaged before starting engine.
- Be sure of your footing while using pedestrian controlled equipment, especially when backing up. Walk, don't run. Never operate on wet grass. Reduced footing could cause slipping.
- Slow down and use extra care on hillsides. Be sure to travel side-to-side on hillsides. Turf conditions can affect the machine's stability. Use caution while operating near drop-offs.
- Slow down and use caution when making turns and when changing directions on slopes.
- Never raise deck with the blades running.
- Never operate with the PTO shield, or other guards not securely in place. Be sure all interlocks are attached, adjusted properly, and functioning properly.
- Never operate with the discharge deflector raised, removed or altered, unless using a grass catcher.
- Do not change the engine governor setting or overspeed the engine.
- Stop on level ground, disengage drives, engage parking brake, shut off engine before leaving the operator's position for any reason including emptying the catchers or unclogging the chute.
- Stop equipment and inspect blades after striking objects or if an abnormal vibration occurs. Make necessary repairs before resuming operations.
- Keep hands and feet away from the cutting unit.
- Look behind and down before backing up to be sure of a clear path.
- Keep pets and bystanders away.
- Slow down and use caution when making turns and crossing roads and sidewalks. Stop blades if not mowing.
- Be aware of the mower discharge direction and do not point it at anyone.
- Do not operate the mower under the influence of alcohol or drugs.
- Use care when loading or unloading the machine into or from a trailer or truck.
- Use care when approaching blind corners, shrubs, trees, or other objects that may obscure vision.

Maintenance and storage

- Disengage drives, set parking brake, stop engine and disconnect spark plug wire. Wait for all movement to stop before adjusting, cleaning or repairing.
- Clean grass and debris from cutting unit, drives, mufflers, and engine to help prevent fires. Clean up oil or fuel spillage.
- Let engine cool before storing and do not store near flame.
- Shut off fuel while storing or transporting. Do not store fuel near flames or drain indoors.
- Park machine on level ground. Set parking brake. Never allow untrained personnel to service machine.
- Use jack stands to support components when required.
- Carefully release pressure from components with stored energy.
- Remove spark plug wire before making any repairs.
- Use care when checking blades. Wrap the blades or wear gloves, and use caution when servicing them. Only replace blades. Never straighten or weld them.
- Keep hands and feet away from moving parts. If possible, do not make adjustments with the engine running.
- Keep all parts in good working condition and all hardware tightened. Replace all worn or damaged decals.

Toro Mower Safety

The following list contains safety information specific to Toro products and other safety information you must know.

This product is capable of amputating hands and feet and throwing objects. Always follow all safety instructions to avoid serious injury or death.

This product is designed for cutting and recycling grass or, when equipped with a grass bagger, for catching cut grass. Any use for purposes other than these could prove dangerous to user and bystanders.

General Operation

- Allow only responsible adults who are familiar with the instructions to operate the machine.
- Be sure the area is clear of other people before mowing. Stop the machine if anyone enters the area.
- Do not mow in reverse unless absolutely necessary. Always look down and behind before and while backing.
- Be aware of the mower discharge direction and do not point it at anyone. Do not operate the mower without either the entire grass catcher or the guard in place.
- Slow down before turning. Sharp turns on any terrain may cause loss of control.
- Turn off blades when not mowing.
- Keep hands, feet, hair and loose clothing away from attachment discharge area, underside of mower and any moving parts while engine is running.
- Stop the engine before removing the grass catcher or unclogging the chute.
- Mow only in daylight or good artificial light.
- Watch for traffic when operating near or crossing roadways.
- Do not touch equipment or attachment parts which may be hot from operation. Allow to cool before attempting to maintain, adjust or service.
- Use only Toro-approved attachments. Warranty may be voided if used with unapproved attachments.

Slope Operation

All slopes and ramps require extra caution. If you feel uneasy on a slope, do not mow it.

DO

- Remove obstacles such as rocks, tree limbs, etc. from the mowing area. Watch for holes, ruts or bumps. Tall grass can hide obstacles.
- Use slow speed so that you will not have to stop while on the slope.
- Use extra care with grass catchers or other attachments. These can change the stability of the machine.
- Keep all movement on slopes slow and gradual. Do not make sudden changes in speed or direction.
- Avoid starting or stopping on a slope. If tires lose traction, disengage the blades.
- Mow slopes side-to-side.

DO NOT

- Do not mow slopes greater than 15 degrees.
- Avoid turning on slopes. If you must turn, turn slowly and gradually downhill, if possible.
- Do not mow near drop-offs, ditches, or embankments. The machine could suddenly turn over if a wheel goes over the edge of a cliff or ditch, or if an edge caves in.
- Do not mow on wet grass. Reduced traction could cause sliding.
- Do not use a grass catcher on steep slopes. Heavy grass bags could cause loss of control of the machine.
- Do not mow up and down slopes.

Service

- Never store the machine or fuel container inside where there is an open flame, such as near a water heater or furnace.
- Keep nuts and bolts tight, especially the blade attachment bolts. Keep equipment in good condition.
- Never tamper with safety devices. Check safety systems for proper operation before each use.
- Use only genuine replacement parts to ensure that original standards are maintained.
- Check brake operation frequently. Adjust and service as required.

Slope Chart

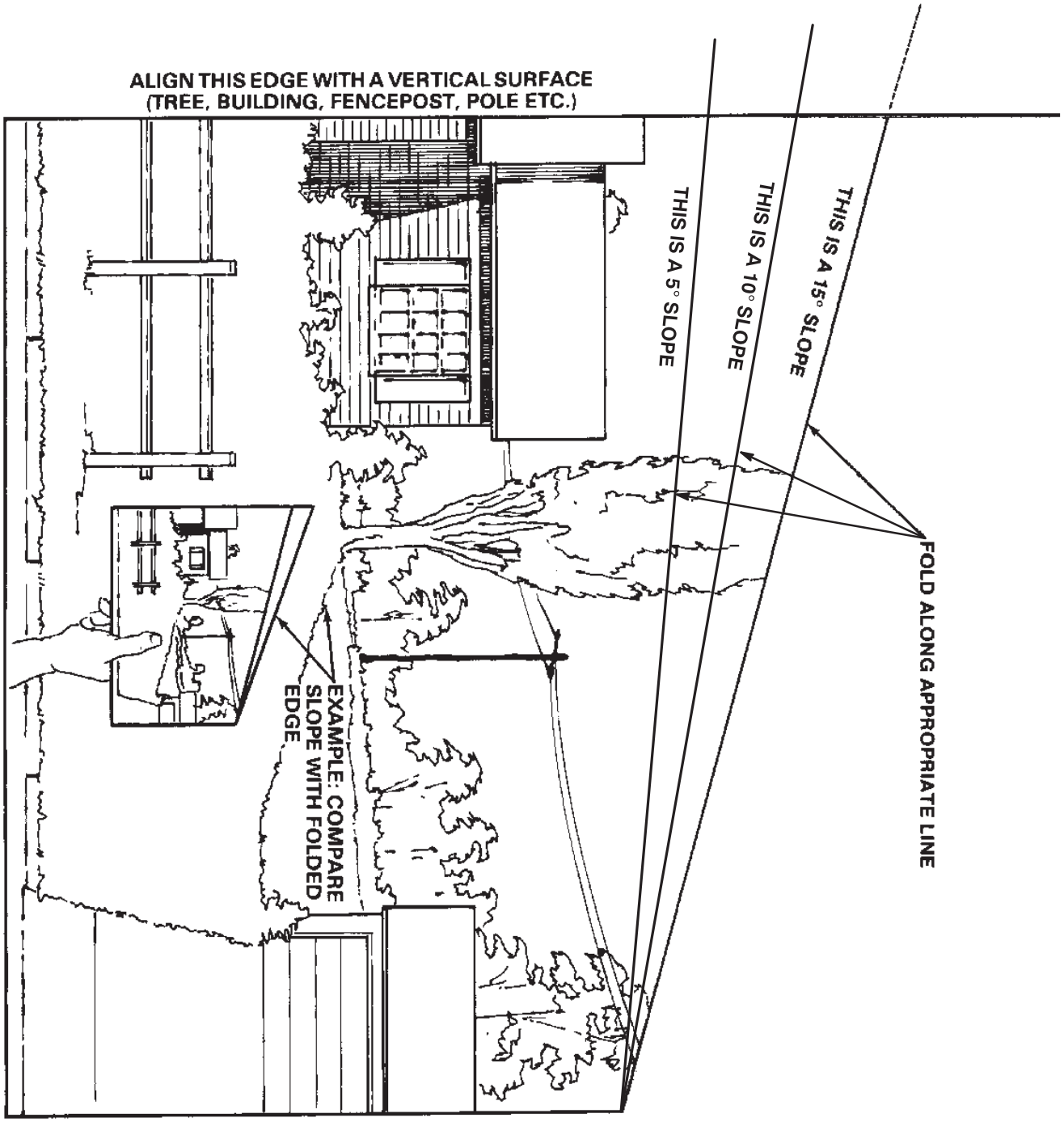
ALIGN THIS EDGE WITH A VERTICAL SURFACE
(TREE, BUILDING, FENCEPOST, POLE ETC.)
THIS IS A 5° SLOPE
THIS IS A 10° SLOPE
THIS IS A 15° SLOPE
FOLD ALONG APPROPRIATE LINE
EXAMPLE: COMPARE SLOPE WITH FOLDED EDGE

Safety and Instruction Decals

Safety decals and instructions are easily visible to the operator and are located near any area of potential danger. Replace any decal that is damaged or lost.



1-403005



66-1340



54-9220



67-5360



95-2814

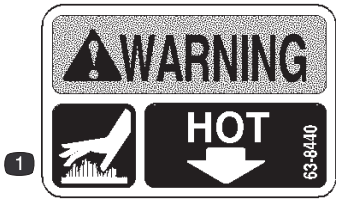

63-8440

1. Hot surface

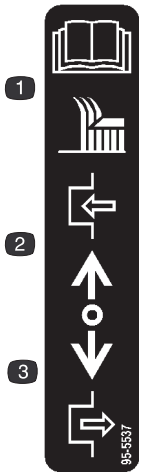

95-5537

1. Read the *Operator's Manual* for instructions on operating the cutting blade
2. Push forward to engage
3. Pull back to disengage



98-0776

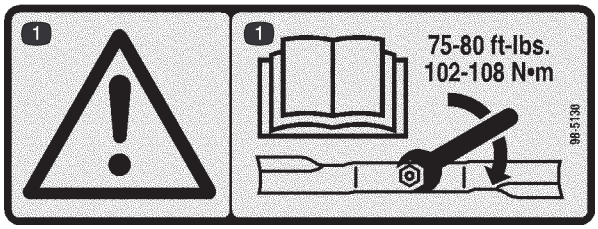

98-5130

1. Warning—read the *Operator's Manual* for instructions on torquing the blade bolt/nut to 75-80 ft.-lb.(102-106 N·m).

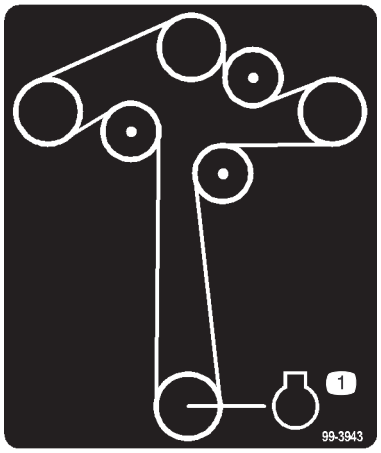

99-3943

1. Engine



105-4104

1. Reverse
2. Neutral
3. Transmission speeds



105-4111

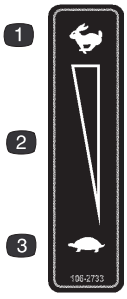

106-2733

1. Fast
2. Continuous variable setting
3. Slow

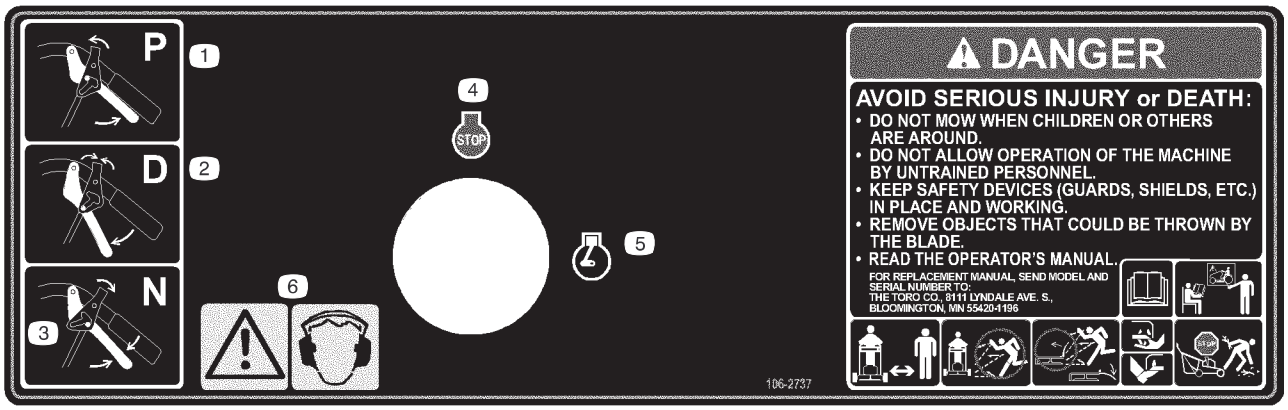

106-2737

1. Park
2. Drive
3. Neutral
4. Engine—stop
5. Engine—run
6. Warning—wear hearing protection.

Gasoline and Oil

Recommended Gasoline

Use unleaded regular gasoline suitable for automotive use (85 pump octane minimum). Use leaded regular gasoline if unleaded regular is not available.

Important Never use methanol, gasoline containing methanol, or gasohol containing more than 10% ethanol because the fuel system could be damaged. Do not mix oil with gasoline.

Danger

In certain conditions, gasoline is extremely flammable and highly explosive. A fire or explosion from gasoline can burn you and others and can damage property.

- **Fill the fuel tank outdoors, in an open area, when the engine is cold. Wipe up any gasoline that spills.**
- **Never fill the fuel tank inside an enclosed trailer.**
- **Do not fill the fuel tank completely full. Add gasoline to the fuel tank until the level is 1/4 to 1/2 in. (6 to 13 mm) below the bottom of the filler neck. This empty space in the tank allows the gasoline to expand.**
- **Never smoke when handling gasoline, and stay away from an open flame or where gasoline fumes may be ignited by a spark.**
- **Store gasoline in an approved container and keep it out of the reach of children. Never buy more than a 30-day supply of gasoline.**
- **Always place gasoline containers on the ground and away from your vehicle before filling.**
- **Do not fill gasoline containers inside a vehicle or on a truck or trailer bed because interior carpets or plastic truck bed liners may insulate the container and slow the loss of any static charge.**
- **When practical, remove gas-powered equipment from the truck or trailer and refuel the equipment with its wheels on the ground.**
- **If this is not possible, then refuel such equipment on a truck or trailer from a portable container, rather than from a gasoline dispenser nozzle.**
- **If a gasoline dispenser nozzle must be used, keep the nozzle in contact with the rim of the fuel tank or container opening at all times until fueling is complete.**

Warning

Gasoline is harmful or fatal if swallowed. Long-term exposure to vapors can cause serious injury and illness.

- **Avoid prolonged breathing of vapors.**
- **Keep face away from nozzle and fuel tank or conditioner opening.**
- **Keep gasoline away from eyes and skin.**

Using Fuel Stabilizer/Conditioner

Use a fuel stabilizer/conditioner in the machine to provide the following benefits:

- Keeps gasoline fresh during storage of 90 days or less (For longer storage, drain the fuel tank.)
- Cleans the engine while it runs
- Eliminates gum-like varnish buildup in the fuel system, which causes hard starting

Important Do not use fuel additives containing methanol or ethanol.

Add the correct amount of fuel stabilizer/conditioner to the gasoline.

Note: A fuel stabilizer/conditioner is most effective when mixed with fresh gasoline. To minimize the chance of varnish deposits in the fuel system, use fuel stabilizer at all times.

Filling the Fuel Tank

1. Stop the engine, remove the key, and wait for all moving parts to stop.
2. Set the parking brakes.
3. Clean around the fuel tank cap and remove the cap. Add unleaded regular gasoline to the fuel tank until the level is 1/4 to 1/2 inch (6 mm to 13 mm) below the bottom of the filler neck. This space in the tank allows the gasoline to expand. Do not fill the fuel tank completely full.
4. Install the fuel tank cap securely. Wipe up any spilled gasoline.

Checking the Engine Oil Level

Before you start the engine and use the machine, check the oil level in the engine crankcase; refer to Checking the Engine Oil Level, page 28.

Setup

Note: Determine the left and right sides of the machine from the normal operating position.

Loose Parts

Note: Use the chart below to verify all parts have been shipped.

DESCRIPTION	QTY.	USE
Caster assemblies	2	Installing the front casters
Bolt, 3/8 x 3/4 in.	8	
Flange nut, 3/8 in.	8	
Upper handle	1	Installing the upper handle and wire harness
Flanged bolt, 3/8 x 1 in.	4	
Flanged nut, 3/8 in.	4	
Wire tie	2	
Clevis pin	2	Installing the control rods
Washer	2	
Hairpin cotter	2	
Fuel tank	1	Installing the fuel tank
Bolt, 5/16 x 3/4 in.	2	
Lock washer, 5/16 in.	2	
Locknut	2	
Washer, 5/16 in.	4	
Stud	2	
Spring	2	
Operator's Manual	1	Review before operating machine
Engine Operator's Manual	1	
Parts Catalog	1	
Video	1	
Registration card	1	Fill out and return to Toro

Installing the Front Casters

1. Align the casters with the holes on the top and front of the mower, and insert 8 bolts (3/8 x 3/4 in.) through the mower. Secure the casters with 8 flange nuts (3/8 in.) below the mower (Fig. 2).

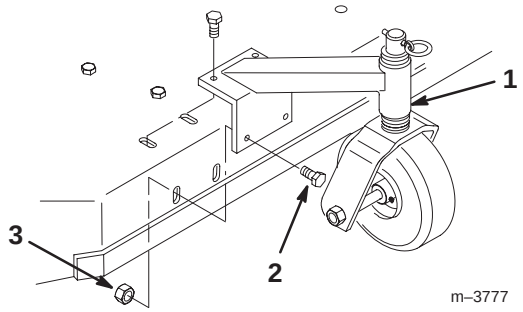

Figure 2

1. Front caster
2. Bolt, 3/8 x 3/4 in.
3. Flange nut, 3/8 in.

Note: Tighten the lower bolts first to pull each caster against the front, then tighten the top bolts.

2. Torque the bolts to 30–35 ft.-lb. (40–47 N•m).

Installing the Upper Handle and Wire Harness

1. Align the upper handle mounting holes with the mounting holes in the rear frame (Fig. 3).

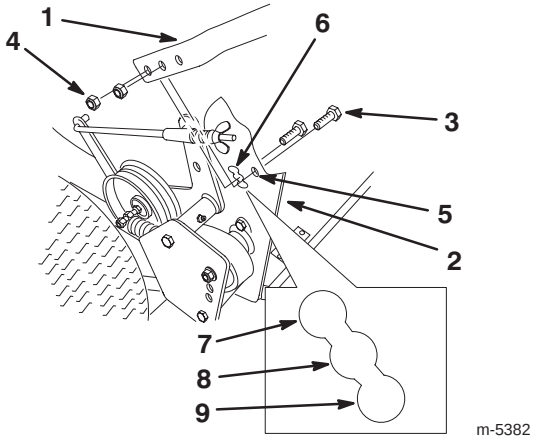

Figure 3

1. Handle
2. Rear frame
3. Flange bolt, 3/8 x 1 in.
4. Flange nut, 3/8 in.
5. Upper mounting hole
6. Lower mounting holes
7. Low position
8. Middle position
9. High position

2. Secure each side of the handle to the rear frame (using the upper mounting hole) with a flange bolt (3/8 in. x 1 in.) and a flange nut (Fig. 3).

3. Select the low, middle, or high position for the lower mounting hole according to the operator's height (Fig. 3).

4. Secure each side of the handle to the rear frame (using the lower mounting hole) with a flange bolt (3/8 in. x 1 in.) and a flange nut (Fig. 3).

Note: If you change the handle position, you must readjust the control rods and brakes.

5. Route the wire harness along the inside of the left handle and under the control panel (Fig. 13).

6. Connect the right-angled insulated terminals to the switch (Fig. 4).

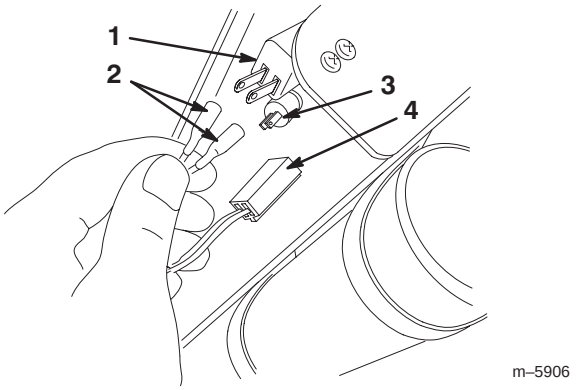

Figure 4

1. Switch
2. Right-angled insulated terminals
3. Key switch
4. Terminal

7. Connect the terminal to the key switch (Fig. 4).

8. Use the wire ties to secure the wire harness and the throttle cable to the left handle and away from the blade control (PTO) lever (Fig. 13).

Installing the Control Rods

1. Thread the rod fittings an equal distance onto each control rod (Fig. 5).

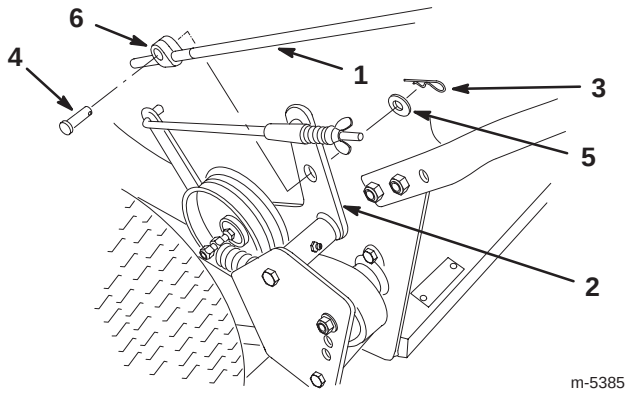

Figure 5

1. Control rod
2. Idler bracket
3. Hairpin cotter
4. Clevis pin
5. Washer
6. Rod fitting

2. Install the rod fittings with clevis pins into the holes in the idler brackets (Fig. 5). Secure the rod fittings with washers and hairpin cotters (Fig. 5).

Note: Install each rod fitting so that the clevis pin is above the control rod as shown in Figure 5.

3. Adjust the control rod length by threading the rod in or out of the rod fitting until there is a 3/16 to 1/4 in. (5 to 6 mm) clearance between the control rod and the bottom of the neutral/parking brake lock (Fig. 6).

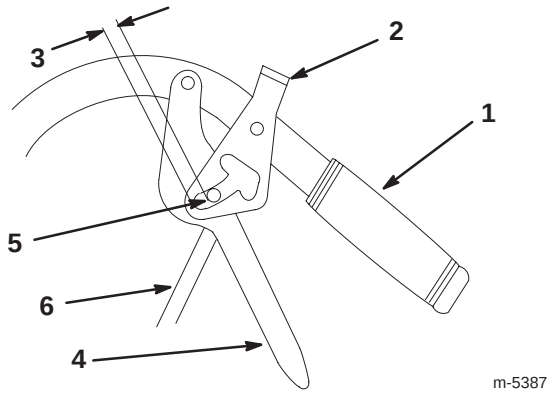

Figure 6

1. Handle
2. Neutral/ parking brake lock
3. 3/16 to 1/4 in. (5 to 6 mm) clearance
4. Drive lever
5. Forward speed
6. Control rod

4. Install the control rod to the drive lever and the neutral/parking brake lock. Secure the control rod with a clevis pin and a hairpin cotter.

5. Check the operation of the control rod. If you need to adjust it, remove the hairpin cotter and the clevis pin that secure the control rod to the drive levers.

6. Adjust the control rod length by repeating steps 3 and 4 (Fig. 6).

Adjusting the Parking Brakes

Refer to Servicing the Brakes, page 31 for checking the brakes and adjusting them.

Connecting the Throttle Cable

1. Route the throttle cable along the right side of the upper handle, under the fuel tank support, and to the left side of the engine.

2. Position the throttle control (Fig. 13) 1/4 in. (6 mm) from the upper end of the slot.

3. Attach the inner wire of the throttle cable to the top hole in the throttle control lever as shown in Figure 7.

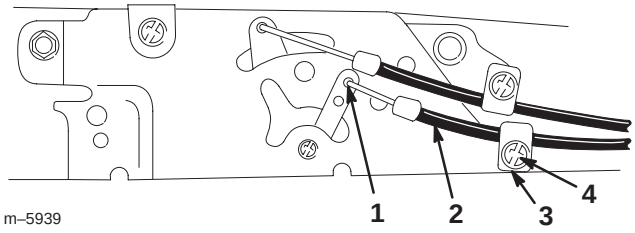

Figure 7

1. Top hole in the throttle control lever
2. Inner wire of throttle cable
3. Cable clamp
4. Cable clamp screw

4. Loosen the cable clamp and insert the cable behind it (Fig. 7).

5. Pull on the cable and move the throttle control to the **Fast** position.

6. Tighten the cable clamp screw.

Installing the Blade Control (PTO) Rod

1. Rotate the blade control (PTO) lever vertically away from the left handle so that the blade control (PTO) rod drops down (Fig. 8).

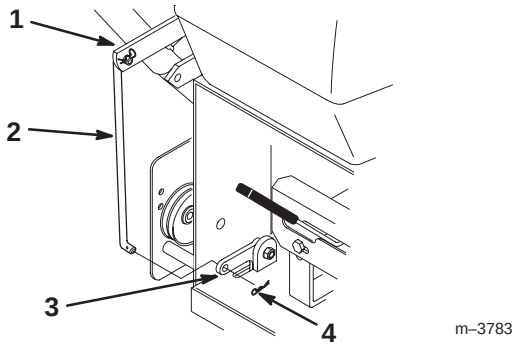

Figure 8

1. Blade control lever
2. Blade control (PTO) rod
3. Bell crank
4. Hairpin cotter

2. Remove the hairpin cotter from the bottom end of the blade control (PTO) rod (Fig. 8).
3. Secure the blade control (PTO) rod through the hole in the bell crank with the hairpin cotters (Fig. 8).

Installing the Shift Lever

1. Remove the locknut (3/8 in.) and the spring washer (Fig. 9).

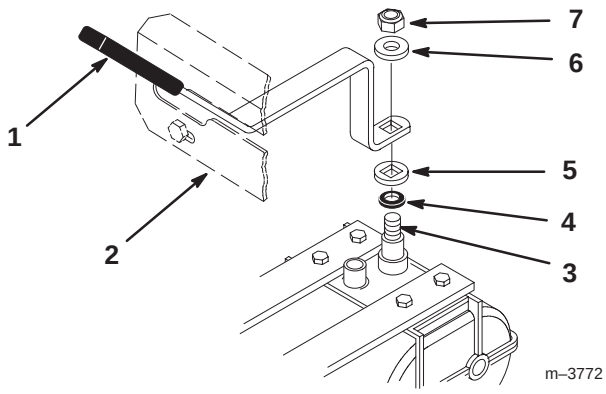

Figure 9

1. Shift lever
2. Control panel
3. Transmission shaft
4. Rubber seal washer
5. Square hole washer
6. Spring washer
7. Locknut, 3/8 in.

Note: Do not remove the rubber seal washer and the square hole washer from the transmission shaft.

2. Slide the shift lever through the control panel, and align the mounting hole in the shift lever with the square on the transmission shaft (Fig. 9).
3. Secure the lever to the transmission with the spring washer and locknut you previously removed (Fig. 9).
4. Install the spring washer (dish down) and the locknut (Fig. 9).
5. Torque the locknut to 35 ft.-lb. (47 N•m).
6. Shift the lever to second gear and check the alignment of the lever in the slot of the shifter plate.

   Note: The clearance between the top of the lever and the top of the slot should be about equal to the clearance between the bottom of the lever and the bottom of the slot.
7. If clearance is not correct, remove the lever and bend it slightly to adjust it.

   Note: Do not bend the lever while it is attached to the transmission shaft, or damage may occur.

Installing the Fuel Tank

1. Align the fuel tank to the top of the rear frame, and secure the right side of the fuel tank with 2 bolts (5/16 x 3/4 in.), 2 lock washers (5/16 in.), and 2 washers (5/16 in.) (Fig. 10).

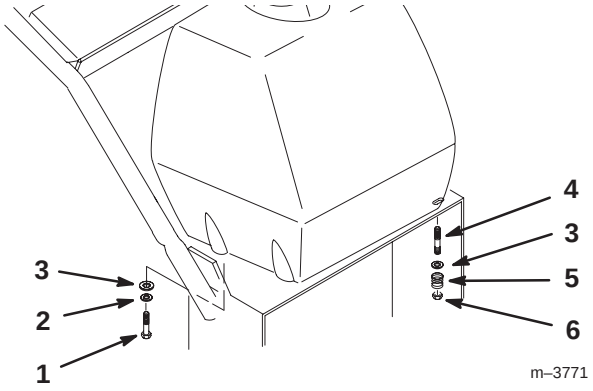

Figure 10

1. Bolt , 5/8 x 7/8 in. (2)
2. Lock washer, 5/16 in. (2)
3. Washer, 5/16 in. (2)
4. Stud (2)
5. Spring (2)
6. Locknut (2)

2. Secure the left side of the fuel tank to the frame with 2 studs (5/16 x 7/8 in.), 2 washers (5/16 in.), 2 springs, and 2 locknuts (5/16 in.) (Fig. 10).

   Note: Tighten the left side of the fuel tank until it is completely tight, then unscrew the locknut one full turn. This allows the spring to work.

3. Push the fuel line onto the fuel tank fitting, and secure the fuel line with a hose clamp (Fig. 11).

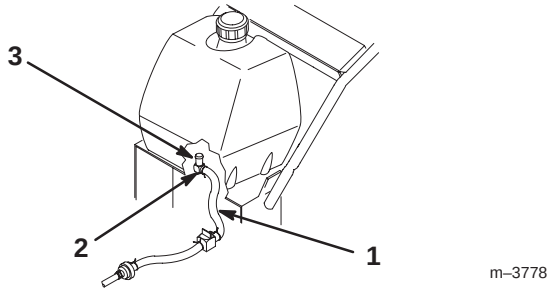

Figure 11

1. Fuel line
2. Hose clamp
3. Fuel fitting

Installing the Muffler

1. Loosen the clamp (Fig. 12).

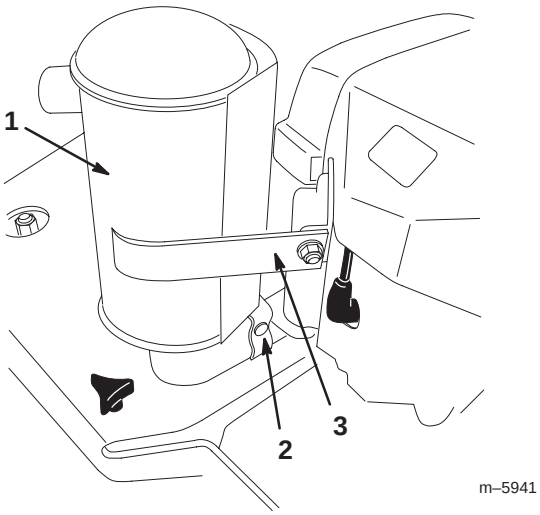

Figure 12

1. Muffler
2. Clamp
3. Muffler bracket

2. Rotate the muffler forward into the position shown in Figure 12.

3. Secure the muffler bracket (Fig. 12) to the engine bracket with the hardware provided.

4. Tighten the clamp.

Operation

Note: Determine the left and right sides of the machine from the normal operating position.

Think Safety First

Carefully read all the safety instructions and decals in the safety section. Knowing this information could help you, your family, pets, or bystanders avoid injury.

Caution

This machine produces sound levels in excess of 85dBA at the operator's ear and can cause hearing loss through extended periods of exposure.

Wear hearing protection when operating this machine.

Use protective equipment for eyes, hearing, feet, and head.

Controls

Become familiar with all the controls (Fig. 13) before you start the engine and operate the machine.

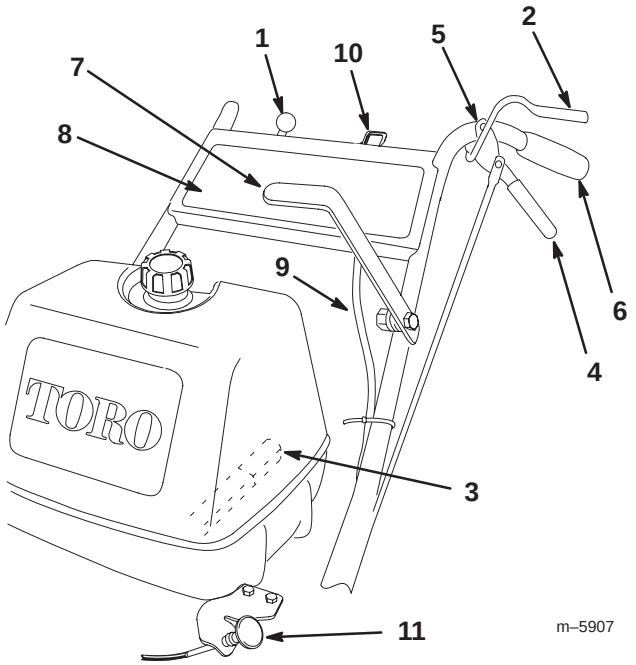

Figure 13

1. Throttle control
2. Operator Presence Control (OPC) lever (2)
3. Gear shift lever
4. Drive lever (2)
5. Neutral/parking brake lock (2)
6. Handle (2)
7. Blade control (PTO) lever
8. Control panel
9. Wire harness
10. Ignition switch
11. Choke

Throttle control—The throttle control has two positions: Fast and Slow.

Operator presence control (OPC) levers—When you squeeze the OPC levers against the handles, the OPC system senses that the operator is in the normal operating position. When you release the OPC levers, the OPC system senses that the operator has left the normal operating position, and the system will stop the engine if either the gear shift lever is not in the **Neutral** position or the blade control (PTO) lever is engaged.

Gear shift lever—The transmission has five forward speeds, neutral and reverse, and has an in-line shift pattern. **Do not shift the lever while the mower is moving to prevent transmission damage.**

Drive levers—The drive levers control the wheel traction. Release the drive levers to engage the wheel traction, or squeeze them to disengage the traction. Fully squeezing the drive levers engages the parking brakes. Gradually squeezing the left or right drive lever disengages the traction on that side, causing the left or right wheel to slow down. This causes the mower to turn left or right, respectively. The sharpness of the turn depends on how much you squeeze the drive lever. To move the mower straight forward (or backward), smoothly release both drive levers simultaneously.

Neutral/parking brake locks—Squeeze the drive levers back and move the locks rearward to activate the neutral lock. Squeeze the drive levers back and move the locks forward to activate the parking brake locks.

Choke—Use the choke to start a cold engine.

Blade control (PTO) lever—The blade control (PTO) lever engages and disengages power to the mower blades. Move the PTO lever forward to engage the blades. Pull the lever rearward to stop driving the mower blades.

Ignition switch—The ignition switch is used in conjunction with the recoil starter. The switch has two positions: **Run** and **Off**.

Recoil starter (On the engine)—Pull the recoil starter handle to start the engine.

Fuel shut-off valve (In the fuel line)—Close the fuel shut-off valve when transporting or storing the mower.

Operating the Parking Brake and Neutral Locks

Always set the parking brakes when you stop the machine or leave it unattended.

Setting the Parking Brakes

1. Squeeze the drive levers back (Fig. 14).

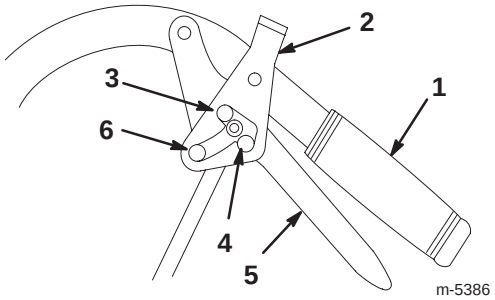

Figure 14

1. Handle
2. Neutral/parking brake lock
3. Park position
4. Neutral position
5. Drive lever
6. Full speed forward

2. Place your thumbs on the upper part of the locks and move them forward in into the **Park** position (Fig. 14).

3. Release the drive levers.

Releasing the Parking Brakes

1. Squeeze the drive levers back (Fig. 14).

2. Place your thumbs on the upper part of the locks and move them rearward until they are in the **Drive** position (Fig. 14).

Setting the Neutral Locks

1. Squeeze the drive levers back (Fig. 14).
2. Place your thumbs on the upper part of the locks and move them rearward into the **Neutral Lock** position (Fig. 14).

Releasing the Neutral Locks

1. Squeeze the drive levers back.
2. Place your thumbs on the upper part of the locks and move them forward until they are in the **Drive** position (Fig. 14).

Starting the Engine

1. Connect the wires to the spark plugs.
2. Open the fuel valve.
3. Disengage the blade control (PTO) lever and move the shift lever to the **Neutral** position.
4. Set the parking brakes.
5. Turn the ignition key to the **Run** position.
6. Move the throttle control midway between the **Fast** and **Slow** positions before starting a cold engine.

   Note: A warm or hot engine usually does not require any choking. To start a warm engine, move the throttle control to the **Fast** position.
7. Pull the choke knob.
8. Grasp the recoil starter handle firmly and pull it out until positive engagement results; then pull the handle vigorously to start the engine. Allow the rope to recoil slowly.

Important Do not pull the recoil rope to its limit or release the starter handle when you pull out the rope because the rope may break or the recoil assembly may be damaged.

9. If the engine is cold, allow it to warm up and then move the throttle control to the **Fast** position.

Stopping the Engine

Important In an emergency, you can stop the engine immediately by turning the ignition key to the **Off** position.

1. Move the throttle lever to the **Slow** position (Fig. 13).

Note: If the engine has been working hard or is hot, let it idle for a minute before stopping it to help cool it.

2. Turn the ignition key to the **Off** position.
3. Set the parking brakes.
4. Disconnect the wires from the spark plugs to prevent someone from accidentally starting the machine while transporting or storing it.
5. Close the fuel shut-off valve before transporting or storing the machine.

Important Close the fuel shut-off valve before transporting or the storing the machine to prevent fuel leakage.

Operating the Blade Control (PTO) Lever

The blade control (PTO) lever engages and disengages the power to the mower blades.

Engaging the Mower Blades (PTO)

1. Squeeze the operator presence control (OPC) levers against the handles (Fig. 13).
2. Push the blade control (PTO) lever firmly forward until it latches over the center (Fig. 13).

Disengaging the Mower Blades (PTO)

Pull the blade control (PTO) lever **fully** rearward (Fig. 13).

Understanding the Safety Interlock System

Caution

If safety interlock switches are disconnected or damaged, the machine could operate unexpectedly, causing personal injury.

- **Do not tamper with the interlock switches.**
- **Check the operation of the interlock switches daily and replace any damaged switches before operating the machine.**

Understanding the Safety Interlock System

The safety interlock system is designed to prevent the mower from starting unless:

- The blade control (PTO) lever is disengaged.
- The machine is shifted into the **Neutral** position.
- The ignition key is in the **Run** position.

The safety interlock system is designed to stop the engine when:

- the Operator Presence Control (OPC) levers are released when the transmission or the blades are engaged;
- the ignition key is turned to the **Off** position;
- the machine is shifted into gear without holding the OPC levers; or
- the blade control (PTO) lever is engaged without holding the OPC levers.

Testing the Safety Interlock System

Test the safety interlock system before you use the machine each time. If the safety system does not operate as described, have an Authorized Service Dealer repair the safety system immediately.

1. Set the parking brakes and move the shift lever into the **Neutral** position.
2. Start the engine; refer to Starting the Engine, page 19.
3. Without holding the Operator Presence Control (OPC) levers, engage the blade control (PTO) lever. **The engine should stop.**
4. Disengage the blade control (PTO) lever.
5. With the engine running, hold down the OPC levers and engage the blade control (PTO) lever. The clutch should engage and **the mower blades begin rotating.**
6. Release the OPC levers. **The engine should stop.**
7. With the engine running, move the shift lever into gear and release the OPC levers. **The engine should stop.**
8. With the engine running, turn the ignition key to the **Off** position. **The engine should stop.**
9. If all the above conditions are not met, have an Authorized Service Dealer repair the safety system immediately.

Driving Forward or Backward

The throttle control regulates the engine speed as measured in rpm (revolutions per minute). Move the throttle control into the **Fast** position for the best mowing performance.

Driving Forward

1. Ensure that the parking brakes are engaged.
2. Squeeze the OPC levers against the handles.
3. Move the shift lever into a forward gear.
4. Release the parking brakes; refer to Releasing the Parking Brakes, page 18.
5. Slowly release the drive levers.

Note: To go straight, release the drive levers equally. To turn, squeeze the drive lever on the same side as the direction you want to turn.

Driving Backward

1. Ensure that the parking brakes are engaged.
2. Squeeze the OPC levers against the handles.
3. Move the shift lever into the reverse gear.
4. Release the parking brakes; refer to Releasing the Parking Brakes, page 18.
5. Slowly release the drive levers together to move rearward.

Note: You must pull the mower backward to assist its rearward movement.

Stopping the Mower

1. Squeeze the drive levers all the way back to engage the brakes.
2. Set the parking brakes. Refer to Setting the Parking Brakes, page 18.
3. Shift transmission into the **Neutral** position.
4. Turn the ignition key to the **Off** position, and wait for all moving parts to stop before leaving the operating position.

Caution

Children or bystanders may be injured if they move or attempt to operate the machine while it is unattended.

Always set the parking brakes when you leave the machine unattended, even for a few minutes.

Transporting the Mower

Use a heavy-duty trailer or truck to transport the mower. Ensure that the trailer or truck has all the necessary lighting and marking as required by law. Please carefully read all the safety instructions. Knowing this information could help you, your family, pets, or bystanders avoid injury.

To transport the mower:

- Lock the brakes and block the wheels.
- Securely fasten the mower to the trailer or truck with straps, chains, cable, or ropes.
- Secure the trailer to the towing vehicle with safety chains.

Side Discharging or Mulching the Grass

This mower has a hinged grass deflector that disperses clippings to the side and down toward the turf.

Danger

Without the grass deflector, discharge cover, or complete grass catcher assembly mounted in place, you and others are exposed to blade contact and thrown debris. Contact with rotating mower blades and thrown debris will cause injury or death.

- **Never remove the grass deflector from the mower because the grass deflector routes the material down toward the turf. If the grass deflector is ever damaged, replace it immediately.**
- **Never put your hands or feet under the mower.**
- **Never try to clear the discharge area or the mower blades unless you disengage the power take-off (PTO), stop the engine, remove the key, wait for all moving parts to stop, and disconnect the wires from the spark plugs.**

Adjusting the Wheel Drive Tension

You may need to increase the wheel drive belt tension under certain operating conditions, such as mower over hilly terrain or while pulling a sulky.

1. Stop the engine, remove the key, and wait for all moving parts to stop.
2. Disconnect the wires from the spark plugs.
3. Disengage the neutral/parking brake locks, and release the drive levers to reduce the spring force.
4. Remove the drive spring from the adjustment bolt (Fig. 15).

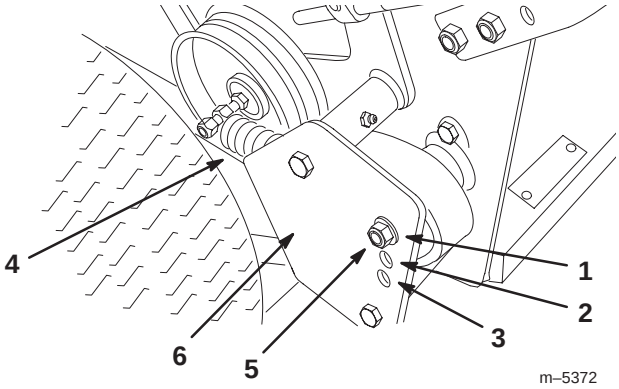

Figure 15

1. Position A
2. Position B
3. Position C
4. Drive spring
5. Adjustment bolt (In position A)
6. Drive pulley shield

5. Remove the locknut that secures the adjustment bolt to the drive pulley shield (Fig. 15).
6. Locate bolt assembly in the desired tension position as follows:
   - Position A for normal conditions
   - Position B for more severe conditions
   - Position C for the most severe conditions

Note: The wheel drive tension is lowest when the bolt assembly is in Position A. The tension increases in Positions B and C (Fig. 15).

7. Install the adjustment bolt and the drive spring.
8. Repeat steps 4 through 7 for the opposite side.

Adjusting the Height-of-Cut

This machine has a 1 to 4-1/4 in. (26 to 108 mm) range for the height-of-cut. This can be achieved by adjusting blade spacers, rear axle height and front caster spacers. Use the Height-of-Cut Chart on page 23 to select the combination required.

Adjusting the Blade Height

Adjust the blades by using the 4 spacers (1/4 in.) on the blade spindle bolts. This allows a range, in 1/4 in. (6 mm) increments, of cutting height in any axle position. Use the same number of blade spacers on all blades to achieve a level cut (2 above and 2 below, 1 above and 3 below, etc.).

1. Disengage the blade control (PTO) lever and set the parking brakes.
2. Stop the engine, remove the key, and wait for all moving parts to stop before leaving the operating position.
3. Hold the blade bolt and remove the nut (Fig. 16).

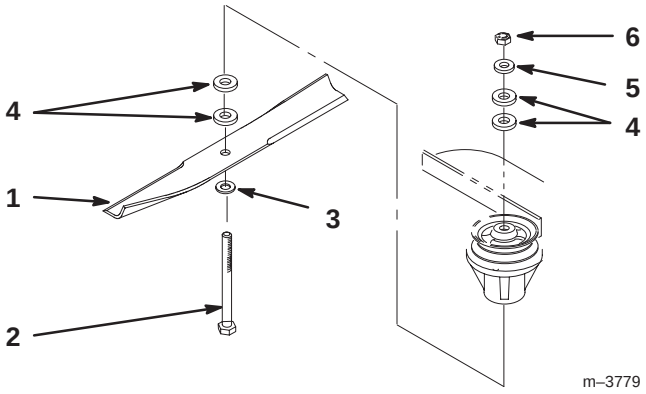

Figure 16

1. Blade
2. Blade bolt
3. Cone washer
4. Spacer
5. Thin washer
6. Nut

4. Slide the bolt down through the spindle, and change the spacers as needed (Fig. 16).
5. Insert a bolt, add extra spacers, and secure them with a thin washer and a nut (Fig. 16).
6. Torque the blade bolt to 75–80 ft.-lb. (101–108 N•m).

Adjusting the Axle Height

You can obtain the desired height-of-cut range by adjusting the rear axle and placing the caster spacers above or below the caster arm (refer to the Height-of-cut Chart, page 23).

1. Disengage the blade control (PTO) lever and set the parking brakes.
2. Stop the engine, remove the key, and wait for all moving parts to stop before leaving the operating position.
3. Loosen, but do not remove, the 2 axle pivot bolts and the 2 axle adjustment bolts (Fig. 17).

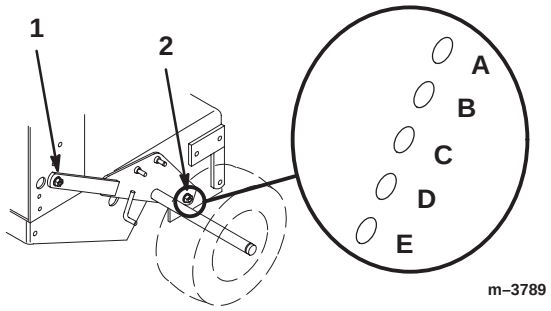

Figure 17

1. Axle pivot bolt
2. Axle adjustment bolt

4. Place a jack under the rear center of the engine frame. Raise the back end of the engine frame up enough to remove the front 2 axle adjustment bolts (Fig. 17).
5. Raise or lower the engine frame with the jack so that you can install the front 2 axle adjustment bolts in the desired hole location (Fig. 17).

Note: Use a tapered punch to help align the holes.

6. Tighten all 4 bolts and lower the mower.
7. Adjust the control rods and the brake linkages as required. Refer to Servicing the Brakes, page 31 and Installing the Control Rods, page 14.

Important You must adjust the control rods and the brake linkage when you change the axle positions for proper traction and brake function.

Adjusting the Caster Position

1. Using the Height-of-Cut Chart (on page 23), adjust the caster spacers to match with the axle hole selected (Fig. 18).

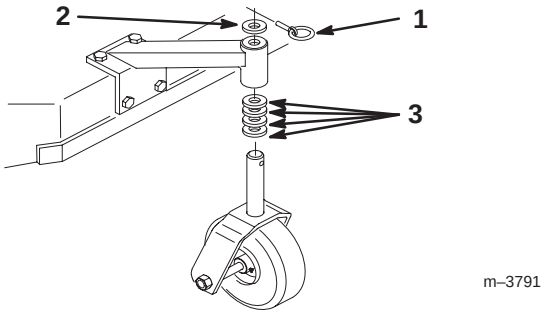

Figure 18

1. Clevis pin
2. Spacer, 3/16 in. (5 mm)
3. Spacer, 1/2 in. (13 mm)

2. Remove the clevis pin, slide the caster from the support, and change the spacers (Fig. 18).
3. Install the caster in the support and insert the clevis pin (Fig. 18).

Height-of-Cut Chart

Axle Position	No. of Spacers Below Caster		Number of 1/4 in. Blade Spacers Below Spindle				
	1/2 in. (13mm)	3/16 in. (5 mm)	4	3	2	1	0
A	0	0	1 in. (26 mm)	1–1/4 in. (32 mm)	1–1/2 in. (38 mm)	1–3/4 in. (45 mm)	2 in. (45 mm)
A	0	1	1–1/8 in. (29 mm)	1–3/8 in. (35 mm)	1–5/8 in. (41 mm)	1–7/8 in. (48 mm)	2–1/8 in. (55 mm)
A	1	0	1–3/8 in. (35 mm)	1–5/8 in. (41 mm)	1–7/8 in. (48 mm)	2–1/8 in. (55 mm)	2–3/8 in. (55 mm)
B	0	1	1–3/8 in. (35 mm)	1–5/8 in. (41 mm)	1–7/8 in. (48 mm)	2–1/8 in. (55 mm)	2–3/8 in. (61 mm)
B	1	0	1–5/8 in. (41 mm)	1–7/8 in. (48 mm)	2–1/8 in. (55 mm)	2–3/8 in. (61 mm)	2–5/8 in. (67 mm)
B	1	1	1–3/4 in. (45 mm)	2 in. (52 mm)	2–1/4 in. (58 mm)	2–1/2 in. (64 mm)	2–3/4 in. (70 mm)
B	2	0	2 in. (45 mm)	2–1/4 in. (58 mm)	2–1/2 in. (64 mm)	2–3/4 in. (70 mm)	3 in. (76 mm)
C	1	1	1–7/8 in. (48 mm)	2–1/8 in. (55 mm)	2–3/8 in. (61 mm)	2–5/8 in. (67 mm)	2–7/8 in. (73 mm)
C	2	0	2–1/8 in. (55 mm)	2–3/8 in. (61 mm)	2–5/8 in. (67 mm)	2–7/8 in. (73 mm)	3–1/8 in. (79 mm)
C	2	1	2–1/4 in. (58 mm)	2–1/2 in. (64 mm)	2–3/4 in. (70 mm)	3 in. (76 mm)	3–1/4 in. (82 mm)
C	3	0	2–1/2 in. (64 mm)	2–3/4 in. (70 mm)	3 in. (76 mm)	3–1/4 in. (82 mm)	3–1/2 in. (89 mm)
D	2	1	2–3/8 in. (61 mm)	2–5/8 in. (67 mm)	2–7/8 in. (73 mm)	3–1/8 in. (79 mm)	3–3/8 in. (86 mm)
D	3	0	2–1/2 in. (64 mm)	2–3/4 in. (70 mm)	3 in. (76 mm)	3–1/4 in. (82 mm)	3–1/2 in. (89 mm)
D	3	1	2–3/4 in. (70 mm)	3 in. (76 mm)	3–1/4 in. (82 mm)	3–1/2 in. (89 mm)	3–3/4 in. (96 mm)
D	4	0	3 in. (76 mm)	3–1/4 in. (82 mm)	3–1/2 in. (89 mm)	3–3/4 in. (96 mm)	4 in. (102 mm)
E	3	1	2–7/8 in. (73 mm)	3–1/8 in. (79 mm)	3–3/8 in. (86 mm)	3–5/8 in. (92 mm)	3–7/8 in. (99 mm)
E	4	0	3–1/8 in. (79 mm)	3–3/8 in. (86 mm)	3–5/8 in. (92 mm)	3–7/8 in. (99 mm)	4–1/8 in. (105 mm)
E	4	1	3–1/4 in. (82 mm)	3–1/2 in. (89 mm)	3–3/4 in. (96 mm)	4 in. (102 mm)	4–1/4 in. (108 mm)

Maintenance

Note: Determine the left and right sides of the machine from the normal operating position.

Important Refer to your engine operator's manual for additional maintenance procedures.

Recommended Maintenance Schedule

Maintenance Service Interval	Maintenance Procedure
Each Use	• Engine Oil—check the level • Safety System—check • Brakes—check • Engine—clean the cooling system • Idler Pivots—grease
After first 8 Hours	• Engine Oil—change • Mower Belt—check the tension
8 Hours	• Cutting Blades—check • Mower Housing—clean • Caster Wheels—grease • Wheel Bearings—grease[1]
After first 25 Hours	• Mower Belt—check tension
25 Hours	• Foam Air Cleaner—service[1]
50 Hours	• Belts—check for wear/cracks • Paper Air Cleaner—clean[1] • Mower Belt—check the tension • Mower Belt Idler Pivots—grease • Tires—check pressure
100 Hours	• Engine Oil—change[1] • Engine—clean the outside • Transmission Couplings—grease[1] • Spark Plugs—check
200 Hours	• Engine Oil Filter—change (200 hours or every other oil change) • Fuel Filter—replace • Paper Air Cleaner—replace[1]
At storage	• Chipped Surfaces—paint • Perform all maintenance procedures listed above before storing the mower

[1]More often in dusty, dirty conditions.

Important Refer to your engine operator's manual for additional maintenance procedures.

Caution

Someone could accidently start the engine and seriously injure you or other bystanders.

Disconnect the wires from the spark plugs before you do any maintenance. Set the wire aside so that it does not accidentally contact the spark plug.

Servicing the Cutting Blades

To ensure a superior quality of cut, keep the blades sharp. For convenient sharpening and replacement, keep extra blades on hand.

Warning

A worn or damaged blade can break, and a piece of the blade could be thrown into the operator's or bystander's area, resulting in serious personal injury or death.

- **Inspect the blades periodically for wear or damage.**
- **Replace a worn or damaged blade.**

Before Inspecting or Servicing the Blades

Park the machine on a level surface, disengage the blade control (PTO) lever, and set the parking brakes.

Inspecting the Blades

1. Inspect the cutting edges (Fig 19). If the edges are not sharp or have nicks, remove and sharpen the blades. Refer to Sharpening the Blades, page 26.

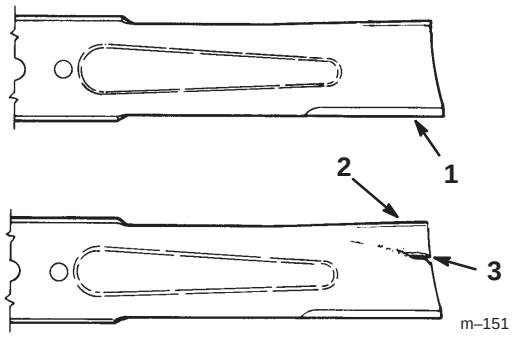

Figure 19

1. Cutting edge
2. Curved area
3. Wear/slot forming

2. Inspect the blades, especially the curved area (Fig. 19). If you notice any damage, wear, or a slot forming in this area (item 3 in Fig. 19), immediately install a new blade.

Checking for Bent Blades

1. Rotate the blades until the ends face forward and backward (Fig. 20).

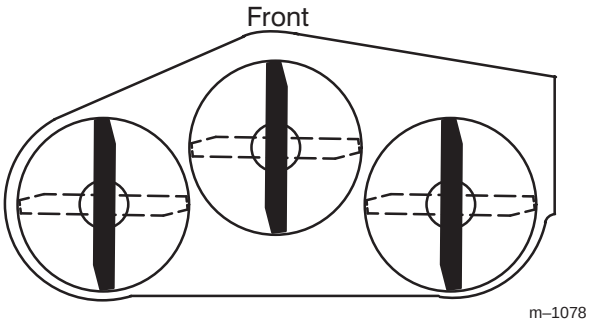

Figure 20

2. Measure from a level surface to the cutting edge of the blades (Fig. 21). Note this dimension.

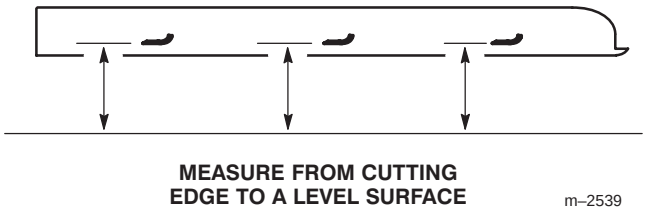

Figure 21

3. Rotate the opposite ends of the blades forward.
4. Measure from a level surface to the cutting edge of the blades at the same position as in step 1 above. The difference between the dimensions obtained in steps 1 and 2 must not exceed 1/8 in. (3 mm).

   Note: If this dimension exceeds 1/8 in. (3 mm), the blade is bent and must be replaced. Refer to Removing the Blades, page 26 and Installing the Blades, page 26.

Warning

A blade that is bent or damaged could break apart and could seriously injure or kill you or bystanders.

- **Always replace bent or damaged blade with a new blade.**
- **Never file or create sharp notches in the edges or surfaces of the blade.**

Removing the Blades

Replace the blades if you hit a solid object or if the blades are out of balance or bent. To ensure optimum performance and continued safety conformance of the machine, use genuine Toro replacement blades. Replacement blades made by other manufacturers may result in non-conformance with safety standards.

1. Hold the blade bolt with a wrench.
2. Remove the nut, blade bolt, cone washer, blade, spacers, and thin washer from the spindle (Fig. 22).

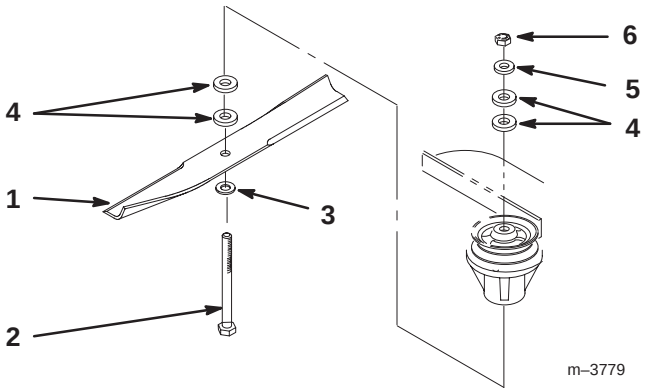

Figure 22

1. Blade
2. Blade bolt
3. Cone washer
4. Spacer
5. Thin washer
6. Nut

Sharpening the Blades

1. Use a file to sharpen the cutting edge at both ends of the blade (Fig. 23). Maintain the original angle. The blade retains its balance if the same amount of material is removed from both cutting edges.

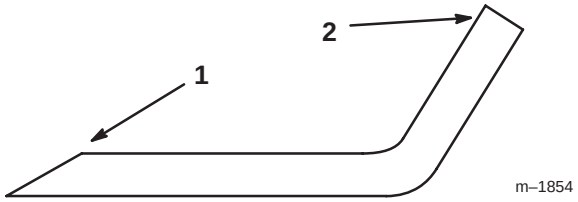

Figure 23

1. Sharpen at original angle
2. Sail

2. Check the balance of the blade by putting it on a blade balancer (Fig. 24). If the blade stays in a horizontal position, the blade is balanced and can be used. If the blade is not balanced, file some metal off the end of the sail area only (Fig. 23). Repeat this step until the blade is balanced.

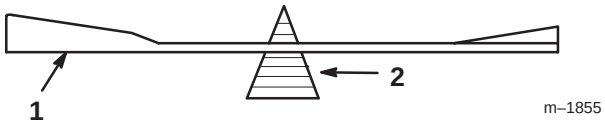

Figure 24

1. Blade
2. Balancer

Installing the Blades

1. Place the blade onto the bolt and over the cone washer. Select the proper number of spacers for the height-of-cut, and slide the bolt into the spindle (Fig. 22).

Important The curved part of the blade must point upward toward the inside of the mower to ensure proper cutting.

2. Install the remaining spacers and secure them with a thin washer and a nut (Fig. 22).
3. Torque the blade bolt to 75–80 ft.-lb. (101–108 N•m).

Servicing the Air Cleaner

Service Interval/Specification

Foam element: Clean and oil it after every 25 operating hours.

Paper element: Clean it after every 50 operating hours. Replace it after every 200 operating hours.

Note: Service the air cleaner more frequently if the operating conditions are extremely dusty or sandy.

Removing the Foam and Paper Elements

1. Disengage the blade control (PTO) lever and set the parking brakes.

2. Stop the engine, remove the key, and wait for all moving parts to stop before leaving the operating position.
3. Clean around the air cleaner to prevent dirt from getting into the engine and causing damage. Pull out the retaining locks and remove the air cleaner cover (Fig. 25).
4. Unscrew the nut and remove the air cleaner assembly (Fig. 25).
5. **Carefully** pull the foam element off the paper element (Fig. 25).

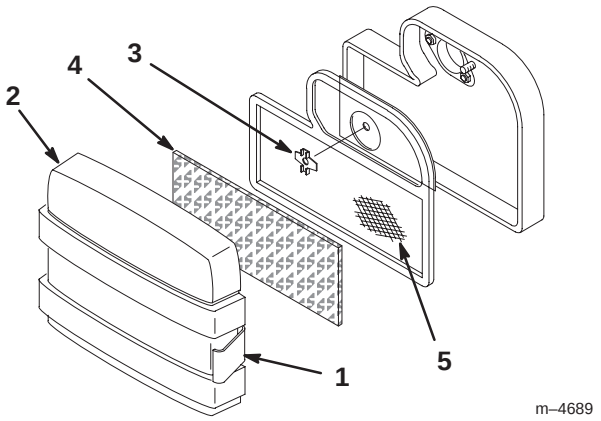

Figure 25

1. Retaining lock
2. Cover
3. Nut
4. Foam element
5. Paper element

Cleaning the Foam Element

1. Wash the foam element in liquid soap and warm water. When the element is clean, rinse it thoroughly.
2. Dry the element by squeezing it in a clean cloth.
3. Put one or two ounces (30 or 60 ml) of oil on the element (Fig. 26), and squeeze the element to distribute the oil.

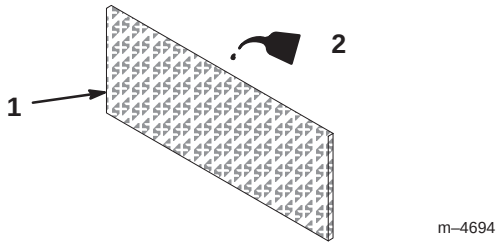

Figure 26

1. Foam element
2. Oil

Important Replace the foam element if it is torn or worn.

Cleaning the Paper Element

1. Lightly tap the element on a flat surface to remove dust and dirt (Fig. 27).

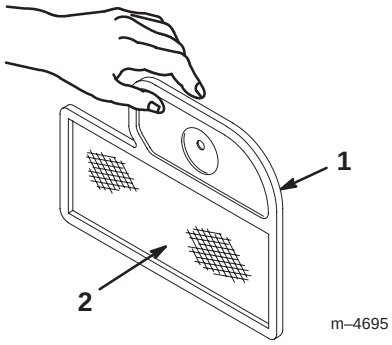

Figure 27

1. Paper element
2. Rubber seal

2. Inspect the element for tears, an oily film, and damage to the rubber seal.

Important Never clean the paper element with pressurized air or liquids, such as solvent, gasoline, or kerosene. Replace the paper element if it is damaged, defective, or cannot be cleaned thoroughly.

Installing the Foam and Paper Elements

Important To prevent engine damage, always operate the engine with the complete foam and paper air cleaner assembly installed.

1. Carefully slide the foam element onto the paper air cleaner element (Fig. 25).
2. Place the air cleaner assembly onto the air cleaner base and secure it with the nut (Fig. 25).
3. Install the air cleaner cover and secure the retaining locks (Fig. 25).

Servicing the Engine Oil

Service Interval/Specification

Change the engine oil:

- After the first 8 operating hours
- After every 100 operating hours

Note: Change the oil more frequently when the operating conditions are extremely dusty or sandy.

Oil Type: Detergent oil (API service SE/CC, SE, SF, or SG)

Crankcase Capacity: with filter, 57.5 oz. (1.6 l); without filter, 51 oz. (1.4 l)

Viscosity: Refer to the table below

USE THESE SAE VISCOSITY OILS

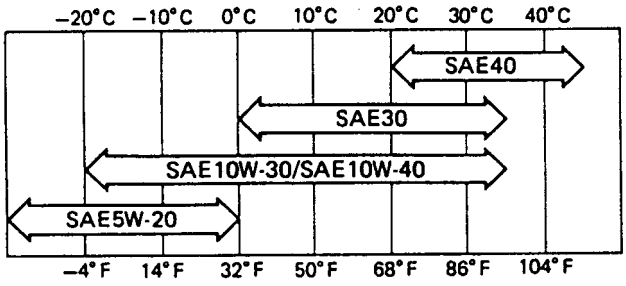

Checking the Engine Oil Level

1. Park the machine on a level surface.
2. Disengage the blade control (PTO) lever and set the parking brakes.
3. Stop the engine, remove the key, and wait for all moving parts to stop before leaving the operating position.
4. Clean around the oil dipstick (Fig. 28) so that dirt cannot fall into the filler hole and damage the engine.

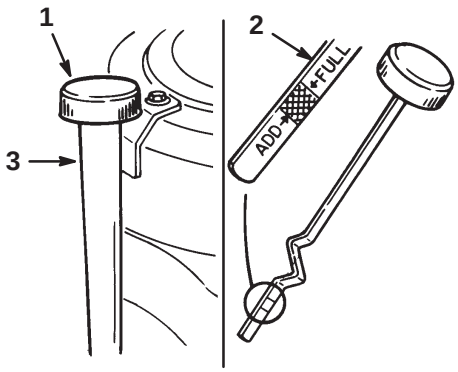

Figure 28

1. Oil dipstick
2. Metal end
3. Filler tube

5. Unscrew the oil dipstick and wipe the metal end clean (Fig. 28).
6. Slide the oil dipstick fully into the filler tube, but do not thread onto tube (Fig. 28).
7. Pull the dipstick out and look at the metal end. If the oil level is low, slowly pour only enough oil into the filler tube to raise the level to the **Full** mark.

Important Do not overfill the crankcase with oil and run the engine; engine damage can result.

Changing the Engine Oil

1. Start the engine and let it run five minutes. This warms the oil so that it drains better.
2. Stop the engine, remove the key, and wait for all moving parts to stop.
3. Park the machine so that the drain side is slightly lower than the opposite side to ensure that the oil drains completely.
4. Disengage the blade control (PTO) lever and set the parking brakes.
5. Place a pan below the oil drain. Remove the oil drain cap (Fig. 29).

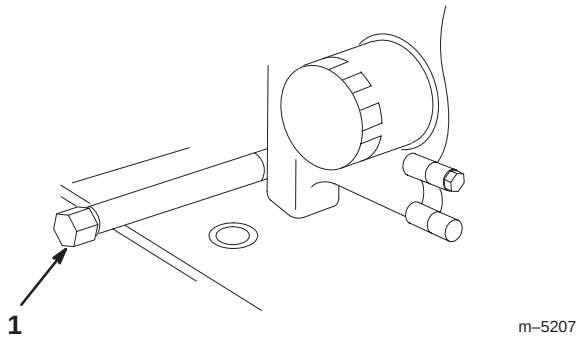

Figure 29

1. Oil drain cap

6. When oil has drained completely, install the oil drain plug.

Note: Dispose of the used oil at a certified recycling center.

7. Slowly pour approximately 80% of the specified oil (refer to Service Interval/Specification, page 27) into the filler cap (Fig. 28).
8. Check the oil level; refer to Checking the Engine Oil Level, page 28.
9. Slowly add the additional oil to bring it to the **Full** mark.

Changing the Oil Filter

Replace the oil filter after every 200 operating hours or every other oil change.

Note: Change the oil filter more frequently when the operating conditions are extremely dusty or sandy.

1. Drain the oil from the engine; refer to Changing the Engine Oil, page 28.
2. Remove the old filter (Fig. 30).

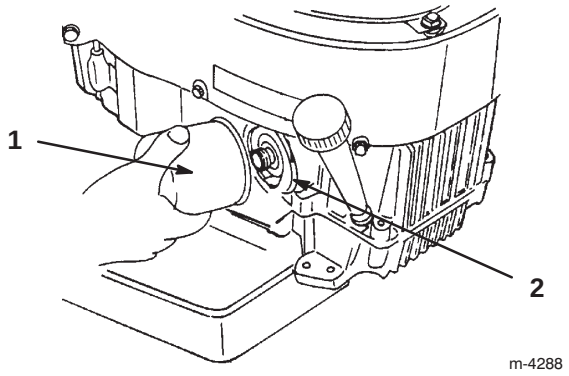

Figure 30

1. Oil filter
2. Adapter

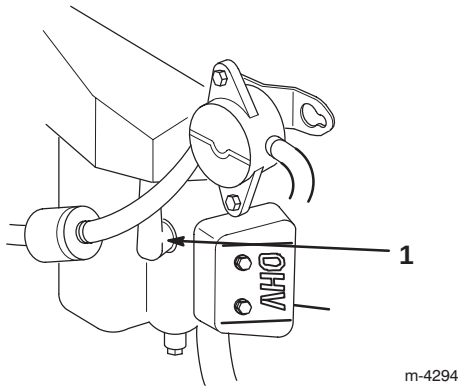

Figure 31

1. Spark-plug (2)

3. Apply a thin coat of new oil to the rubber gasket on the replacement filter (Fig. 30).

4. Install the replacement oil filter to the filter adapter, turn the oil filter clockwise until the rubber gasket contacts the filter adapter, then tighten the filter an additional 3/4 turn (Fig. 30).

5. Fill the crankcase with the proper type of new oil; refer to Changing the Engine Oil, page 28.

Servicing the Spark Plugs

Service Interval/Specification

Check the spark plugs after every 100 operating hours. Ensure that the air gap between the center and side electrodes is correct before installing the spark plug. Use a spark plug wrench for removing and installing the spark plugs, and use a gapping tool/feeler gauge to check and adjust the air gap. Install a new spark plugs if necessary.

Type: Champion® RCJ-8Y, NGK® BPR4ES, or equivalent
Air Gap: 0.030 in. (0.75 mm)

Removing the Spark Plugs

1. Disengage the blade control (PTO) lever and set the parking brakes.

2. Stop the engine, remove the key, and wait for all moving parts to stop before leaving the operating position.

3. Disconnect the wires from the spark plugs (Fig. 31).

4. Clean around the spark plugs to prevent dirt from falling into the engine and potentially causing damage.

5. Remove the spark plugs and the metal washers.

Checking the Spark Plugs

1. Look at the center of the spark plugs (Fig. 32). If you see light brown or gray on the insulator, the engine is operating properly. A black coating on the insulator usually means that the air cleaner is dirty.

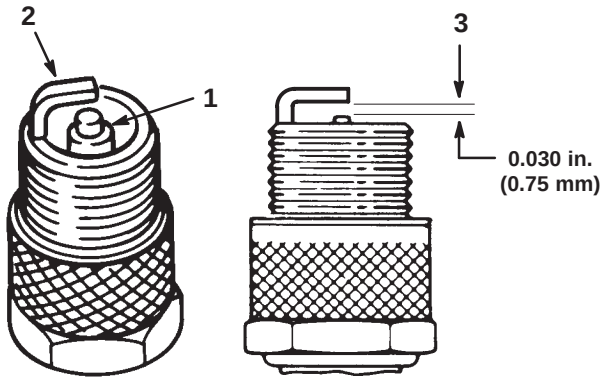

Figure 32

1. Center electrode insulator
2. Side electrode
3. Air gap (not to scale)

Important Never clean the spark plugs. Always replace the spark plugs when it has a black coating, worn electrodes, an oily film, or cracks.

2. Check the gap between the center and side electrodes (Fig. 32). Bend the side electrode (Fig. 32) if the gap is not correct.

Installing the Spark Plugs

1. Install the spark plugs and the metal washer. Ensure that the air gap is set correctly.
2. Tighten the spark plugs to 11 ft.-lb. (15 N.m).
3. Connect the wires to the spark plugs (Fig. 31).

Checking the Tire Pressure

Service Interval/Specification

Maintain the air pressure in the front and rear tires as specified. Check the pressure at the valve stem after every 50 operating hours or monthly, whichever occurs first (Fig. 33). Check the tires when they are cold to get the most accurate pressure reading.

Pressure: 15 psi (103 kPa) rear tires
25–30 psi (172–207 kPa) caster tires

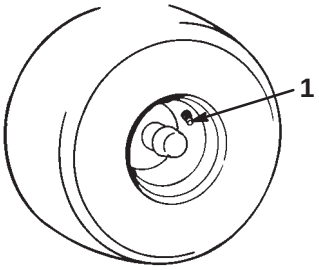

Figure 33

1. Valve stem

Cleaning the Cooling System

Service Interval/Specification

Before each use, check and clean the engine cooling system. Remove any buildup of grass, dirt, or other debris from the cylinder and cylinder head cooling fins, air intake screen on flywheel end, and carburetor-governor levers and linkage. This will help ensure adequate cooling and correct engine speed and will reduce the possibility of overheating and mechanical damage to the engine.

Greasing and Lubrication

Service Interval/Specification

Grease the areas shown at the intervals given in the Locating Where to Add Grease section below. Grease them more frequently when operating conditions are extremely dusty or sandy.

Grease with No. 2 general-purpose lithium-base or molybdenum-base grease.

Applying the Grease

1. Disengage the blade control (PTO) lever and set the parking brakes.
2. Clean the grease fittings with a rag and scrape any paint from the front of the fittings.
3. Connect a grease gun to the fitting and pump grease into the fittings until grease begins to ooze out of the bearings.
4. Wipe up any excess grease.

Locating Where to Apply Grease

1. Lubricate the drive and caster wheel bearings and front spindles (Fig. 34) after every 8 operating hours.

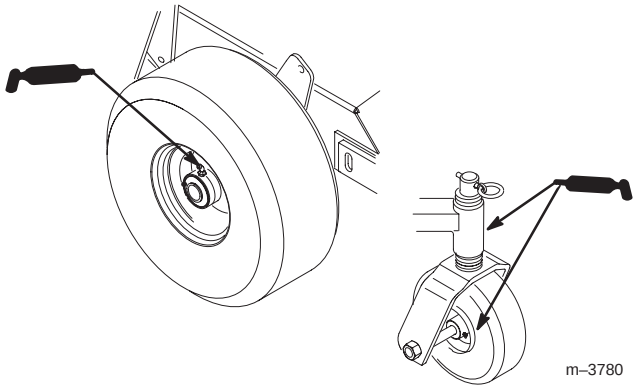

Figure 34

2. Lubricate the transmission couplers after every 100 operating hours and the idler bracket pivots after every 8 operating hours (Fig 35).

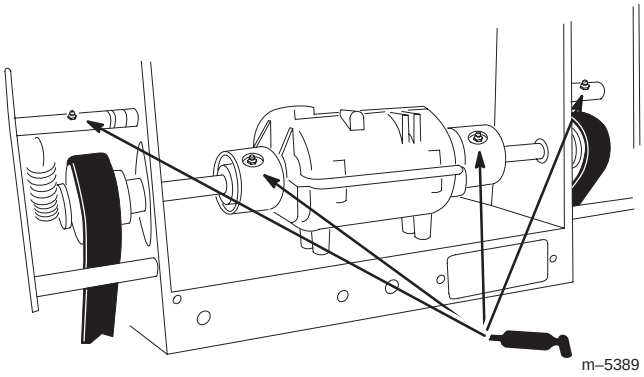

Figure 35

3. Lubricate the blade belt idler arm pivot (Fig. 36) after every 50 operating hours.

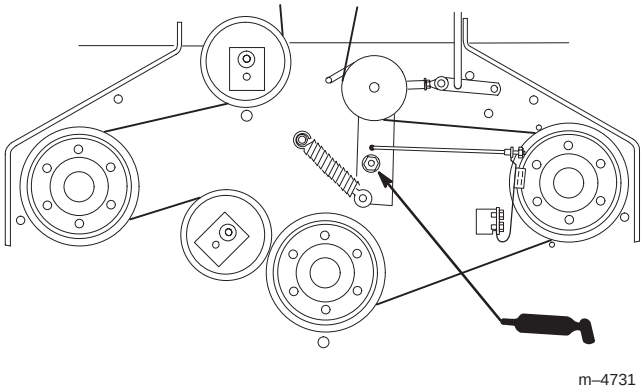

m–4731

Figure 36

Servicing the Brakes

Service Interval/Specification

Before each use, check the brakes for proper operation.

Always set the parking brakes when you stop the machine or leave it unattended. If the parking brakes do not hold securely, adjust them.

Checking the Brakes

1. Park the machine on a level surface, disengage the blade control (PTO) lever, and push the neutral/parking brake locks forward to set the brakes.
2. The rear wheels should lock when you try to push the machine forward or backward. Adjust the brakes if the wheels turn and do not lock. Refer to Adjusting the Brakes, page 31.
3. Release the brakes and move the neutral/brake locks to the **Neutral** position. Move the machine slightly, approximately 1/2 in. (13 mm). The wheels should rotate freely.
4. If both conditions are met, no adjustment is required.

Adjusting the Brakes

If the parking brakes do not hold securely, adjust them.

1. Check the brakes before you adjust them; refer to Checking the Brakes, page 31.
2. Release the parking brakes; refer to Releasing the Parking Brakes, page 18.
3. To adjust the brakes, rotate the wing nuts on the brake rods (Fig. 37). Rotate the wing nuts clockwise to tighten the brakes; rotate them counterclockwise to loosen them.

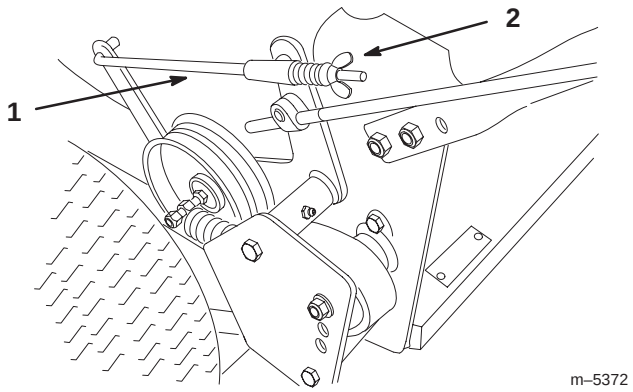

m–5372

Figure 37

1. Brake rod
2. Wing nut

4. Position the wing nuts so that the brakes engage when you squeeze the drive levers enough to place the neutral/parking brake locks forward, and then set the brakes.
5. Check the operation of the brakes again; refer to Checking the Brakes, page 31.

Important When you release the parking brakes, the rear wheels should rotate freely when you push the mower. If they do not, contact an Authorized Service Dealer immediately.

Draining the Fuel Tank

Danger

In certain conditions, gasoline is extremely flammable and highly explosive. A fire or explosion from gasoline can burn you and others and can damage property.

- **Drain gasoline from the fuel tank when the engine is cold. Do this outdoors in an open area. Wipe up any gasoline that spills.**
- **Never smoke when draining gasoline, and stay away from an open flame or where a spark may ignite the gasoline fumes.**

1. Park the machine on a level surface, to ensure that the fuel tank drains completely.

2. Disengage the blade control (PTO) lever and set the parking brakes.
3. Close the fuel shut-off valve in fuel line (Fig. 38).

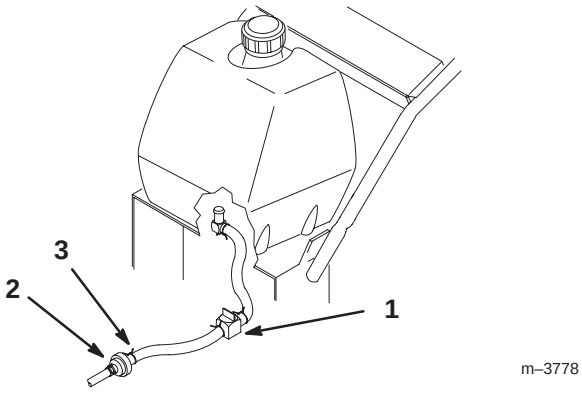

Figure 38

1. Fuel shut-off valve
2. Fuel filter
3. Clamp

4. Squeeze the ends of the hose clamp together, and slide it up the fuel line away from fuel filter (Fig. 38).
5. Pull the fuel line off the fuel filter (Fig. 38).
6. Open the fuel shut-off valve and allow the gasoline to drain into a fuel container or drain pan.

Note: Install a new fuel filter while the fuel tank is empty. Refer to Replacing the Fuel Filter, page 32.

7. Install the fuel line onto the fuel filter, and slide the hose clamp close to the filter to secure the fuel line.

Servicing the Fuel Filter

Service Interval/Specification

Replace the fuel filter after every 200 operating hours or yearly, whichever occurs first.

Replacing the Fuel Filter

Important Never install a dirty filter if it is removed from the fuel line.

1. Disengage the blade control (PTO) lever and set the parking brakes.
2. Stop the engine, remove the key, and wait for all moving parts to stop before leaving the operating position.
3. Close the fuel shut-off valve (Fig. 38).
4. Squeeze the ends of the hose clamps together and slide them away from the filter (Fig. 38).
5. Remove the filter from the fuel lines.
6. Install a new filter and move the hose clamps close to the filter.
7. Open the fuel shut-off valve at the fuel tank (Fig. 38).
8. Check for fuel leaks and make any needed repairs.

Checking the Belts

Service Interval/Specification

Check all belts after every 50 operating hours or monthly, whichever occurs first. Look for dirt, wear, cracks, and signs of overheating.

Replacing the Drive Belt

Service Interval/Specification

Check all belts after every 50 operating hours or monthly, whichever occurs first. Look for dirt, wear, cracks, and signs of overheating.

1. Disengage the blade control (PTO) lever and set the parking brakes.
2. Stop the engine, remove the key, and wait for all moving parts to stop.
3. Remove the drive spring from the adjustment bolt (Fig. 39).

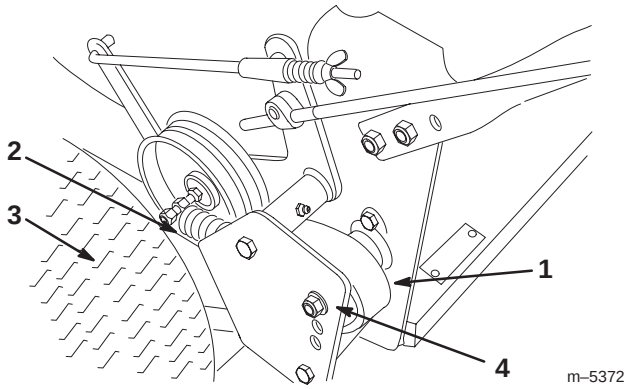

Figure 39

1. Drive belt
2. Drive spring
3. Tire
4. Adjustment bolt

4. Remove the drive belt from the pulleys and over the tire.
5. Install the new belt and the drive spring.

Replacing the Traction Belt

1. Disengage the blade control (PTO) lever and set the parking brakes.
2. Stop the engine, remove the key, and wait for all moving parts to stop before leaving the operating position.
3. Raise the rear of the machine and hold it up with jack stands.
4. Remove the mower belt (Fig. 40).

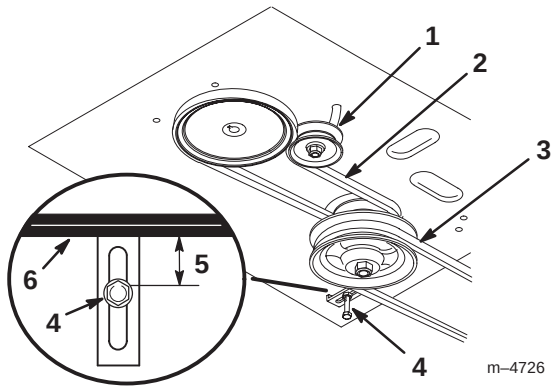

Figure 40

1. Idler pulley in slot
2. Traction belt
3. Mower belt
4. Belt guide
5. 1-1/4 in. (32 mm)
6. Mower belt

5. Loosen the pivot bolt enough to slide the idler pulley in the slot and remove the traction belt from the engine and the drive pulleys (Fig. 40).
6. Install the new traction belt around the engine and the drive pulleys (Fig. 40).
7. Slide the idler pulley in the engine frame to tension the traction belt (Fig. 40).
8. Install the mower belt (Fig. 40).
9. Check the belt guide under the engine frame for the proper adjustment (Fig. 40).

   Note: The distance between the belt guide and mower belt should be 1-1/4 in (32 mm) when the mower belt is engaged. Adjust the belt if necessary. The disengaged belt should not drag or fall off the pulley when the guides are properly adjusted.

Replacing the Mower Belt

1. Disengage the blade control (PTO) lever and set the parking brakes.
2. Stop the engine, remove the key, and wait for all moving parts to stop before leaving the operating position.
3. Remove the knobs and the belt cover on the mower.
4. Remove the idler pulley and the worn belt (Fig. 40).
5. Install the new mower belt.
6. Install the idler pulley.
7. Engage the blade control (PTO) lever and check the belt tension. Refer to Adjusting the Mower Belt Tension, page 34.

Note: The proper mower belt tension is 10–15 lbf. (44–67 N) with the belt deflected 1/2 in. (13 mm) halfway between the pulleys (Fig. 41).

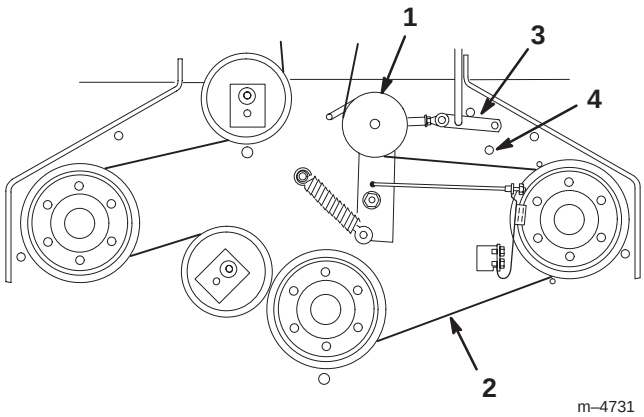

Figure 41

1. Idler pulley
2. 1/2 in. (13 mm) deflection here
3. Assist arm
4. Front stop

8. Engage the blade control (PTO) lever.
9. Check the clearance between the bell crank and the transmission output shaft (Fig. 42).

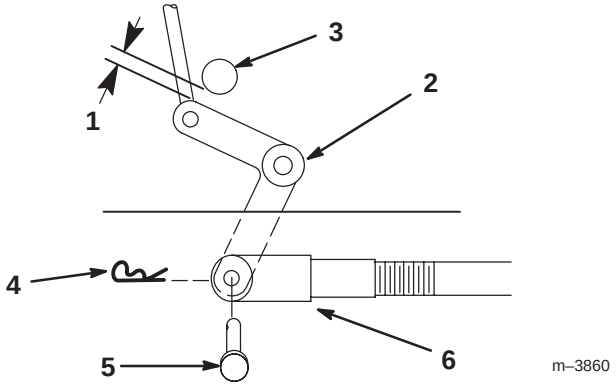

Figure 42

1. 1/16–1/8 in. (2–3 mm)
2. Bell crank
3. Transmission output shaft
4. Hairpin cotter
5. Clevis pin
6. Clevis

Note: The clearance should be 1/16–1/8 in. (2–3 mm).

10. Remove the hairpin cotter and the clevis pin from the bell crank.

11. Rotate the clevis clockwise on the rod to increase the clearance; rotate it counterclockwise to decrease it (Fig. 42).

12. Disengage the blade control (PTO) lever.

Note: If the assist arm does not contact the front stop on the mower deck (Fig. 43), adjust the clevis to bring the bell crank closer to the transmission output shaft (Fig. 42).

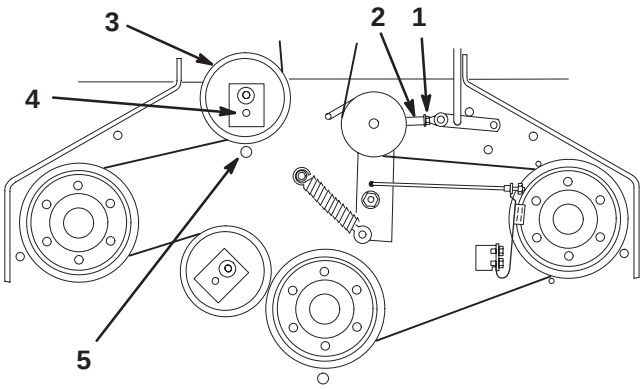

m–4731

Figure 43

1. Locknut
2. Turnbuckle
3. Rear idler pulley
4. Front position for idler pulley
5. Belt guide

13. Check the belt guide under the engine frame for the proper adjustment (Fig. 40).

Note: The distance between the belt guide and the mower belt should be 1-1/4 in. (32 mm) when you engage the mower belt. Adjust the mower belt as necessary. The disengaged belt should not drag or fall off the pulley when the guides are properly adjusted.

Adjusting the Mower Belt Tension

Service Interval/Specification

Check the belt tension after the first 8 operating hours and every 25 operating hours thereafter. Check the belt tension after every 50 operating hours.

Important The belt must be tight enough to not slip during heavy loads while cutting grass. Over tensioning the belt will reduce the bearing life of the belt and the spindle.

1. Disengage the blade control (PTO) lever and set the parking brakes.

2. Stop the engine, remove the key, and wait for all moving parts to stop before leaving the operating position.

3. Loosen the locknut on the turnbuckle (Fig. 43).

4. Rotate the turnbuckle toward the rear of the mower to increase the tension on the belt. Rotate the turnbuckle toward the front of the mower to decrease the tension on the belt (Fig. 43).

Note: The eyebolt threads on both ends of the turnbuckle should be engaged a minimum of 5/16 in. (8 mm).

Adjusting the Blade Brake

1. Disengage the blade control (PTO) lever and set the parking brakes.

2. Stop the engine, remove the key, and wait for all moving parts to stop before leaving the operating position.

3. If necessary, adjust the spring mounting bolts so that the blade brake pad rubs against the pulley edges (Fig. 44).

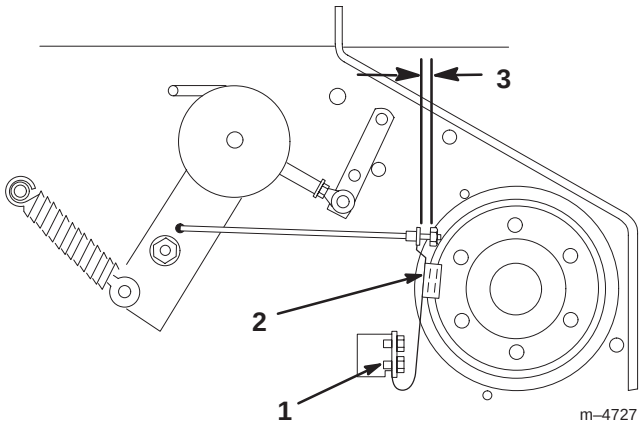

m–4727

Figure 44

1. Spring mounting bolts
2. Blade brake pad
3. 1/8–3/16 in. (3–5mm)

4. Adjust the nut at the end of the blade brake rod until there is 1/8–3/16 in. (3–5 mm) between the nut and the spacer (Fig. 44).

5. Engage the blades, and ensure that the blade brake pad no longer contacts the pulley edges.

Adjusting the Grass/Mud Scraper

1. Loosen the locknut that holds the scraper to the engine frame (Fig. 45).

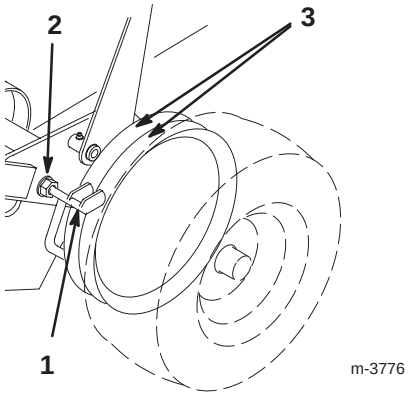

Figure 45

1. Scraper
2. Locknut
3. Pulley

2. Rotate the scraper until it aligns with the center of the pulley grooves (Fig. 45).

3. Tighten the locknut (Fig. 45).

Note: The scraper must not contact the pulley on the sides or bottom of the grooves. Adjust it if necessary.

Replacing the Grass Deflector

Warning

An uncovered discharge opening could allow the lawn mower to throw objects in the operator's or bystander's direction and result in serious injury. Also, contact with the blade could occur.

Never operate the lawn mower unless you install a cover plate, a mulch plate, or a grass chute and catcher.

1. Remove the locknut, bolt, spring, and spacer that hold the deflector to the mounts (Fig. 46).

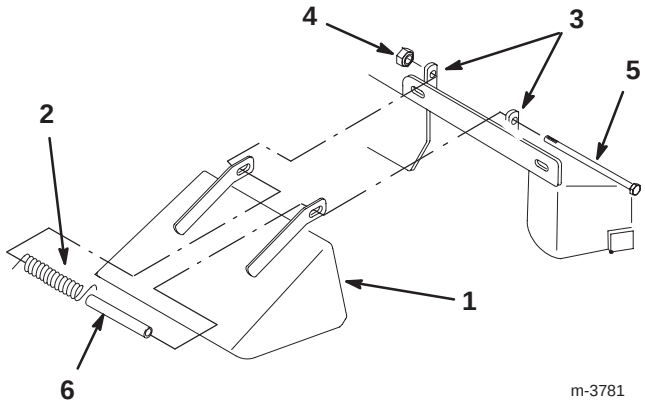

Figure 46

1. Deflector
2. Spring
3. Deflector mount
4. Locknut
5. Bolt
6. Spacer

2. Straighten the deflector mounts if they are bent (Fig. 46).

3. Install a new deflector between the mounts with a spacer and a spring.

4. Hook the front end of the spring around the front deflector mount.

5. Insert the bolt through the spacer and secure it with a locknut.

6. Ensure that there is downward spring force on the deflector (Fig. 46).

7. Tighten the bolt and locknut until they lightly contact the pivot brackets (Fig. 46).

Important The grass deflector must be spring-loaded in the down position. Lift the deflector up to check that it snaps to the fully down position.

Wiring Diagram

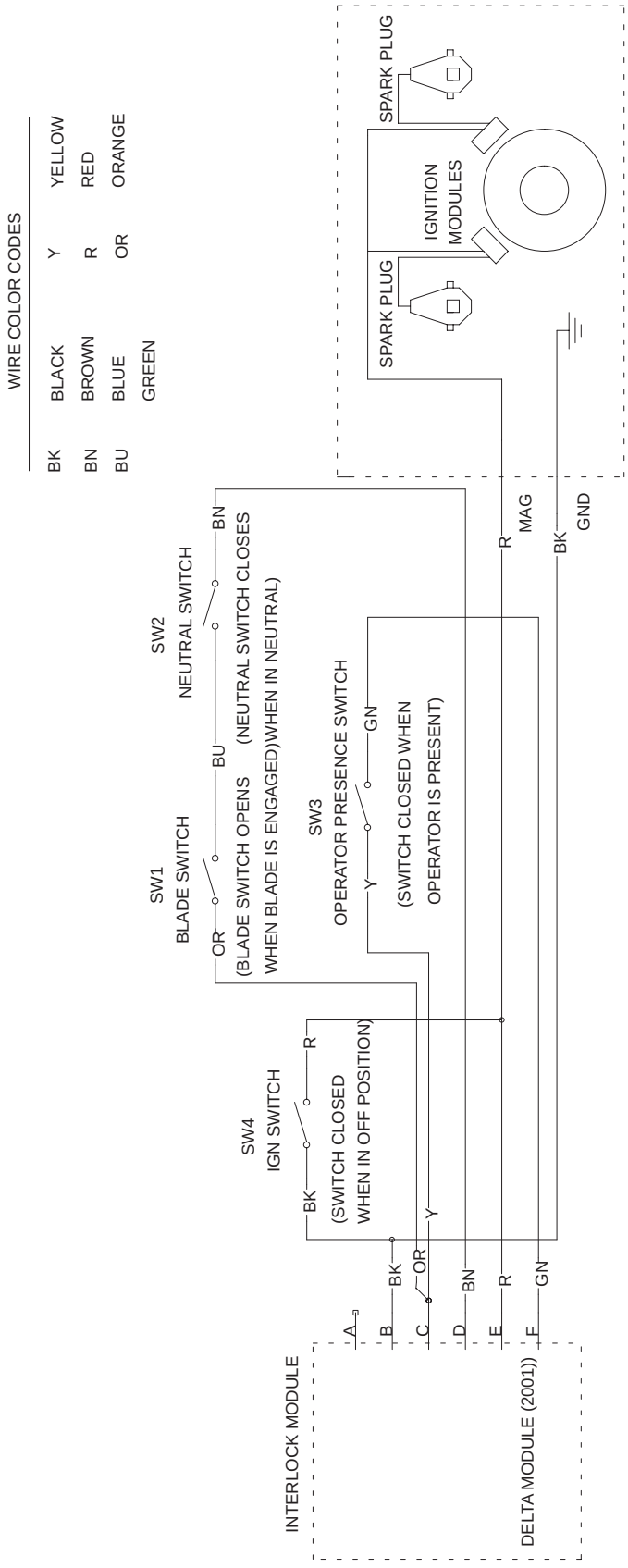

Cleaning and Storage

1. Disengage the blade control (PTO) lever and set the parking brakes.
2. Remove grass clippings, dirt, and grime from the external parts of the entire machine, especially the engine. Clean dirt and chaff from the outside of the engine cylinder head fins and blower housing.

Important Wash the machine with a mild detergent and water. Do not use a pressure washer to wash the machine. Avoid excessive use of water, especially near the control panel and engine.

3. Check the brakes; refer to Servicing the Brakes, page 31.
4. Service the air cleaner; refer to Servicing the Air Cleaner, page 26.
5. Grease the machine; refer to Greasing and Lubrication, page 30.
6. Change the crankcase oil; refer to Servicing the Engine Oil, page 27.
7. Check the tire pressure; refer to Checking the Tire Pressure, page 30.
8. For long-term storage (more than 90 days) add a stabilizer/conditioner additive to the fuel in the tank.
9. Empty the fuel tank using the following steps:

   A. Run the engine to distribute conditioned fuel through the fuel system (5 minutes).

   B. Stop engine and wait for all moving parts to stop before leaving the operating position.

   C. Allow the engine to cool and drain the fuel tank; refer to Servicing the Fuel Tank, page 31, or operate engine until it stops.

   D. Start the engine and run it until it stops. Repeat this step with the throttle in the **Choke** position until engine will not start.

   E. Dispose of fuel properly. Recycle per local codes.

   Note: Do not store stabilizer/conditioned gasoline over 90 days.

10. Remove and inspect the spark plugs; refer to Servicing the Spark Plug, page 29.
11. With the spark plugs removed from the engine, pour two tablespoons of engine oil into the spark plug hole, then use the starter to crank the engine and distribute the oil inside the cylinder.
12. Install the spark plugs. Do not connect the wires to the spark plugs.
13. Check and tighten all bolts, nuts, and screws. Repair or replace any part that is worn or damaged.
14. Paint all scratched or bare metal surfaces with paint available from an Authorized Service Dealer.
15. Store the machine in a clean, dry garage or storage area, and cover it to protect it and keep it clean.

Troubleshooting

Problem	Possible Causes	Corrective Action
The engine will not start, starts hard, or fails to keep running.	1. The fuel tank is empty.	1. Fill the fuel tank with gasoline.
	2. The ignition key is in the **Off** position.	2. Turn the ignition key to the **Run** position.
	3. The choke is not on.	3. Set the throttle control to the **Choke** position.
	4. The blade control (PTO) lever is engaged.	4. Disengage the blade control (PTO) lever.
	5. The air cleaner is dirty.	5. Clean or replace the air cleaner element.
	6. The spark plug wires is loose or disconnected.	6. Connect the wires to the spark plugs.
	7. The spark plugs is pitted, fouled, or gap is incorrect.	7. Install new, correctly gapped spark plugs.
	8. There is dirt in the fuel filter.	8. Replace the fuel filter.
	9. There is dirt, water, or stale fuel in the fuel system.	9. Contact an Authorized Service Dealer.
The engine loses power.	1. The engine load is excessive.	1. Reduce the ground speed.
	2. The air cleaner is dirty.	2. Clean the air cleaner element.
	3. The engine oil level in the crankcase is low.	3. Add engine oil to the crankcase.
	4. The cooling fins and air passages under the engine blower housing are plugged.	4. Remove the obstructions from the cooling fins and air passages.
	5. The spark plugs is pitted, fouled, or the gap is incorrect.	5. Install a new, correctly gapped spark plugs.
	6. The vent hole in the fuel cap is plugged.	6. Clean or replace the fuel cap.
	7. There is dirt in fuel filter.	7. Replace the fuel filter.
	8. There is dirt, water, or stale fuel is in fuel system.	8. Contact an Authorized Service Dealer.
The engine overheats.	1. The engine load is excessive.	1. Reduce the ground speed.
	2. The engine oil level in the crankcase is low.	2. Add oil to the crankcase.
	3. The cooling fins and air passages under the engine blower housing are plugged.	3. Remove the obstructions from cooling fins and air passages.

Problem	Possible Causes	Corrective Action
The machine does not drive.	1. The shift lever is in the **Neutral** position. 2. The traction belt is worn, loose, or broken. 3. The traction belt is off the pulley.	1. Move the shift lever to a drive gear position. 2. Change the belt. 3. Change the belt.
There is abnormal vibration.	1. The cutting blades are bent or unbalanced. 2. The blade mounting bolt is loose. 3. The engine mounting bolts are loose. 4. The engine pulley, idler pulley, or blade pulley is loose. 5. The engine pulley is damaged. 6. The blade spindle is bent.	1. Install new cutting blades. 2. Tighten the blade mounting bolt. 3. Tighten the engine mounting bolts. 4. Tighten the appropriate pulley. 5. Contact an Authorized Service Dealer. 6. Contact an Authorized Service Dealer.
The cutting height is uneven.	1. The blades is/are not sharp. 2. The cutting blades is/are bent. 3. The mower is not level. 4. The underside of the mower is dirty. 5. The tire pressure is incorrect. 6. The blade spindle is bent.	1. Sharpen the blades. 2. Install new cutting blades. 3. Level the mower from side-to-side and front-to-rear. 4. Clean the underside of the mower. 5. Adjust the tire pressure. 6. Contact an Authorized Service Dealer.
The blades do not rotate.	1. The drive belt is worn, loose, or broken. 2. The drive belt is off the pulley. 3. The mower belt is worn, loose, or broken. 4. The mower belt is off the pulley.	1. Check the belt tension. 2. Install the drive belt and check the adjusting shafts and the belt guides for the correct position. 3. Install the new mower belt. 4. Install the deck pulley and check the idler pulley, idler arm, and spring for the correct position and function.
The blades do not stop when they are disengaged.	1. The blade brake is not adjusted properly. 2. The belt guide is not set properly.	1. Adjust the blade brake. 2. Adjust the belt guide.

LCE

The Toro Total Coverage Guarantee

A One-Year Limited Warranty

Conditions and Products Covered

The Toro Company and its affiliate, Toro Warranty Company, pursuant to an agreement between them, jointly promise to repair any Toro Product used for commercial, institutional, or rental purposes if defective in materials or workmanship. The following time periods apply from the date of purchase:

Products	Warranty Period
• All Products	1 year
• All Spindles	2 years parts and labor; third year, parts only
• Engines/Hydraulic Systems* on the following: Outfront and Mid-Mount Z's ProLine Mid-Size Mowers Groundsmaster® Riding Mowers Backpack Blowers	2 years
• Deck Shells (36″–72″) on the following: ProLine Mid-Size Mowers Mid-Mount Z's	2 years
• Electric Clutch on 200 Series Mid-Mount Z's	2 years

This warranty includes the cost of parts and labor, but you must pay transportation costs.

This warranty applies to:

- Outfront and Mid-Mount Z's
- ProLine Mid-Size Mowers
- Groundsmaster Riding Mowers
- Turf Maintenance Equipment
- Debris Management Equipment

* Some engines used on Toro LCE Products are warranted by the engine manufacturer.

Instructions for Obtaining Warranty Service

If you think that your Toro Product contains a defect in materials or workmanship, follow this procedure:

1. Contact any Toro Authorized or Master Service Dealer to arrange service at their dealership. To locate a dealer convenient to you, access our website at www.Toro.com. U.S. Customers may also call 800-348-2424.
2. Bring the product and your proof of purchase (sales receipt) to the Service Dealer.

If for any reason you are dissatisfied with the Service Dealer's analysis or with the assistance provided, contact us at:

LCB Customer Service Department
Toro Warranty Company
8111 Lyndale Avenue South
Bloomington, MN 55420-1196
888-577-7466 (U.S. customers)
877-484-9255 (Canada customers)

Owner Responsibilities

You must maintain your Toro Product by following the maintenance procedures described in the operator's manual. Such routine maintenance, whether performed by a dealer or by you, is at your expense.

Items and Conditions Not Covered

There is no other express warranty except for special emission system coverage on some products. This express warranty does not cover the following:

- Cost of regular maintenance service or parts, such as filters, fuel, lubricants, tune-up parts, blade sharpening, brake and clutch adjustments.
- Any product or part which has been altered or misused or required replacement or repair due to normal wear, accidents, or lack of proper maintenance.
- Repairs necessary due to improper fuel, contaminants in the fuel system, or failure to properly prepare the fuel system prior to any period of non-use over three months.
- Pickup and delivery charges.

All repairs covered by this warranty must be performed by an Authorized Toro Service Dealer using Toro approved replacement parts.

General Conditions

Repair by an Authorized Toro Service Dealer is your sole remedy under this warranty.

Neither The Toro Company nor Toro Warranty Company is liable for indirect, incidental or consequential damages in connection with the use of the Toro Products covered by this warranty, including any cost or expense of providing substitute equipment or service during reasonable periods of malfunction or non-use pending completion of repairs under this warranty.

Some states do not allow exclusions of incidental or consequential damages, or limitations on how long an implied warranty lasts, so the above exclusions and limitations may not apply to you.

All implied warranties of merchantability (that the product is fit for ordinary use) and fitness for use (that the product is fit for a particular purpose) are limited to the duration of the express warranty.

This warranty gives you specific legal rights, and you may also have other rights which vary from state to state.

Countries Other than the United States or Canada

Customers who have purchased Toro products exported from the United States or Canada should contact their Toro Distributor (Dealer) to obtain guarantee policies for your country, province, or state. If for any reason you are dissatisfied with your Distributor's service or have difficulty obtaining guarantee information, contact the Toro importer. If all other remedies fail, you may contact us at Toro Warranty Company.

Part No. 374-0037 Rev. B