Form No. 3327-572

TORO®

Mid–Size Mower

ProLine Hydro 15 hp with 36″ Side Discharge Mower

Model No. 30524—Serial No. 220000001 and Up

Operator’s Manual

English (EN)

Warning

The engine exhaust from this product contains chemicals known to the State of California to cause cancer, birth defects, or other reproductive harm.

Important This engine is not equipped with a spark arrester muffler. It is a violation of California Public Resource Code Section 4442 to use or operate this engine on any forest-covered, brush-covered or grass-covered land. Other states or federal areas may have similar laws.

This spark ignition system complies with Canadian ICES-002.

Ce système d'allumage par étincelle de véhicule est conforme à la norme NMB-002 du Canada.

The enclosed Engine Owner's Manual is supplied for information regarding The U.S. Environmental Protection Agency (EPA) and the California Emission Control Regulation of emission systems, maintenance and warranty.

Keep this engine Owner's Manual with your mower. Should this engine Owner's Manual become damaged or illegible, replace immediately. Replacements may be ordered through the engine manufacturer.

Contents

	Page
Introduction	3
Safety	3
Safe Operating Practices	3
Toro Mower Safety	4
Slope Chart	7
Safety and Instruction Decals	9
Gasoline and Oil	12
Recommended Gasoline	12
Using Fuel Stabilizer/Conditioner	12
Filling the Fuel Tank	12
Checking the Engine Oil Level	12
Setup	13
Loose Parts	13
Installing the Front Casters	14
Installing the Upper Handle	14
Connecting the Throttle Cable	14
Installing the Blade Control (PTO) Rod	15
Installing the Control Rods	15
Installing the Control Arm Rods	16
Installing the Speed Control Rod	16
Installing the Fuel Tank	16
Installing the Muffler	17
Hydro Linkage Set Up	17
Checking the Hydraulic Fluid	18
Operation	19
Think Safety First	19
Controls	19
Starting and Stopping the Engine	20
Operating Neutral Locks	20
Operating Mower Blade Control (PTO)	21
The Safety Interlock System	21
Driving Forward or Backward	22
Bringing Machine to Neutral Position	22
Stopping the Machine	22
Pushing the Machine by Hand	23
Transporting Machines	23
Side Discharge or Mulch Grass	23
Adjusting the Height-of-Cut	23
Adjusting the Caster Position	24
Height-of-Cut Chart	25
Maintenance	26
Recommended Maintenance Schedule	26
Servicing the Cutting Blades	27
Servicing the Air Cleaner	29
Servicing the Engine Oil	30
Servicing the Spark Plugs	31
Checking the Tire Pressure	32
Cleaning the Cooling System	32
Greasing and Lubrication	33
Cleaning the Cooling System	33
Draining the Fuel Tank	33
Servicing the Fuel Filter	34
Servicing the Hydraulic System	34
Hydro Linkage Adjustments	36
Adjust Speed Control Linkage	36
Adjust Neutral Control Linkages	37
Adjust Hydro Control Linkages	38
Control Rod Adjustment	39
Tracking Adjustment	40
Adjusting Spring Anchor Links	40
Checking the Belts	41
Replacing the Mower Belt	41
Adjusting the Mower Belt Tension	42
Adjusting the Blade Brake	42
Replacing the Grass Deflector	42
Wiring Diagram	43
Hydraulic Diagram	44
Cleaning and Storage	45
Troubleshooting	46
The Toro Total Coverage Guarantee	48

© 2002 by The Toro Company

8111 Lyndale Avenue South
Bloomington, MN 55420-1196

All Rights Reserved

Printed in the USA

Introduction

Read this manual carefully to learn how to operate and maintain your product properly. The information in this manual can help you and others avoid injury and product damage. Although Toro designs and produces safe products, you are responsible for operating the product properly and safely.

Whenever you need service, genuine Toro parts, or additional information, contact an Authorized Service Dealer or Toro Customer Service and have the model and serial numbers of your product ready. Figure 1 illustrates the location of the model and serial numbers on the product.

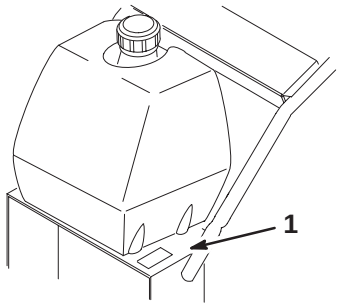

Figure 1

1. Location of the model and serial numbers

Write the product model and serial numbers in the space below:

Model No. _____

Serial No. _____

This manual identifies potential hazards and has special safety messages that help you and others avoid personal injury and even death. ***Danger***, ***Warning***, and ***Caution*** are signal words used to identify the level of hazard. However, regardless of the hazard, be extremely careful.

Danger signals an extreme hazard that *will* cause serious injury or death if you do not follow the recommended precautions.

Warning signals a hazard that *may* cause serious injury or death if you do not follow the recommended precautions.

Caution signals a hazard that may cause minor or moderate injury if you do not follow the recommended precautions.

This manual uses two other words to highlight information. **Important** calls attention to special mechanical information and **Note:** emphasizes general information worthy of special attention.

Safety

Improper use or maintenance by the operator or owner can result in injury. To reduce the potential for injury, comply with these safety instructions and always pay attention to the safety alert ⚠ symbol, which means CAUTION, WARNING, or DANGER—"personal safety instruction." Failure to comply with the instruction may result in personal injury or death.

Safe Operating Practices

The following instructions are from ANSI standard B71.4—1999.

Training

- Read the Operator's Manual and other training material. If the operator(s) or mechanic(s) can not read English it is the owner's responsibility to explain this material to them.
- Become familiar with the safe operation of the equipment, operator controls, and safety signs.
- All operators and mechanics should be trained. The owner is responsible for training the users.
- Never let children or untrained people operate or service the equipment. Local regulations may restrict the age of the operator.
- The owner/user can prevent and is responsible for accidents or injuries occurring to himself or herself, other people or property.

Preparation

- Evaluate the terrain to determine what accessories and attachments are needed to properly and safely perform the job. Only use accessories and attachments approved by the manufacturer.
- Wear appropriate clothing including hard hat, safety glasses and hearing protection. Long hair, loose clothing or jewelry may get tangled in moving parts.
- Inspect the area where the equipment is to be used and remove all objects such as rocks, toys and wire which can be thrown by the machine.
- Use extra care when handling gasoline and other fuels. They are flammable and vapors are explosive.
    - Use only an approved container
    - Never remove gas cap or add fuel with engine running. Allow engine to cool before refueling. Do not smoke.
    - Never refuel or drain the machine indoors.

- Check that operator's presence controls, safety switches and shields are attached and functioning properly. Do not operate unless they are functioning properly.

Operation

- Never run an engine in an enclosed area.
- Only operate in good light, keeping away from holes and hidden hazards.
- Be sure all drives are in neutral and wheels are chocked and blocked before starting engine. Only start engine from the operator's position.
- Be sure of your footing while using this machine, especially when backing up. Walk, don't run. Never operate on wet grass. Reduced footing could cause slipping.
- Slow down and use extra care on hillsides. Be sure to travel side–to–side on hillsides. Turf conditions can affect the machine's stability. Use caution while operating near drop–offs.
- Slow down and use caution when making turns and when changing directions on slopes.
- Never raise deck with the blades running.
- Never operate with the PTO shield, or other guards not securely in place. Be sure all interlocks are attached, adjusted properly, and functioning properly.
- Never operate with the discharge deflector raised, removed or altered, unless using a grass catcher.
- Do not change the engine governor setting or overspeed the engine.
- Stop on level ground, disengage drives, chock or block wheels, shut off engine before leaving the operator's position for any reason including emptying the catchers or unclogging the chute.
- Stop equipment and inspect blades after striking objects or if an abnormal vibration occurs. Make necessary repairs before resuming operations.
- Keep hands and feet away from the cutting unit.
- Look behind and down before backing up to be sure of a clear path.
- Keep pets and bystanders away.
- Slow down and use caution when making turns and crossing roads and sidewalks. Stop blades if not mowing.
- Be aware of the mower discharge direction and do not point it at anyone.
- Do not operate the mower under the influence of alcohol or drugs
- Use care when loading or unloading the machine into or from a trailer or truck
- Use care when approaching blind corners, shrubs, trees, or other objects that may obscure vision.

Maintenance and storage

- Disengage drives, chock or block wheels, stop engine and remove key or disconnect spark plug wire. Wait for all movement to stop before adjusting, cleaning or repairing.
- Clean grass and debris from cutting unit, drives, mufflers, and engine to help prevent fires. Clean up oil or fuel spillage.
- Let engine cool before storing and do not store near flame.
- Shut off fuel while storing or transporting. Do not store fuel near flames or drain indoors.
- Park machine on level ground. Chock or block wheels when it is parked. Never allow untrained personnel to service machine.
- Use jack stands to support components when required.
- Carefully release pressure from components with stored energy.
- Remove spark plug wire before making any repairs.
- Use care when checking blades. Wrap the blade(s) or wear gloves, and use caution when servicing them. Only replace blades. Never straighten or weld them.
- Keep hands and feet away from moving parts. If possible, do not make adjustments with the engine running.
- Keep all parts in good working condition and all hardware tightened. Replace all worn or damaged decals.

Toro Mower Safety

The following list contains safety information specific to Toro products and other safety information you must know.

This product is capable of amputating hands and feet and throwing objects. Always follow all safety instructions to avoid serious injury or death.

This product is designed for cutting and recycling grass or, when equipped with a grass bagger, for catching cut grass. Any use for purposes other than these could prove dangerous to user and bystanders.

General Operation

- Be sure the area is clear of other people before mowing. Stop the machine if anyone enters the area.
- Do not mow in reverse unless absolutely necessary. Always look down and behind before and while backing.
- Be aware of the mower discharge direction and do not point it at anyone. Do not operate the mower without either the entire grass catcher or the guard in place.
- Turn off blades when not mowing.
- Keep hands, feet, hair and loose clothing away from attachment discharge area, underside of mower and any moving parts while engine is running.
- Mow only in daylight or good artificial light.
- Watch for traffic when operating near or crossing roadways.
- Do not touch equipment or attachment parts which may be hot from operation. Allow to cool before attempting to maintain, adjust or service.
- Use only Toro-approved attachments. Warranty may be voided if used with unapproved attachments.

Slope Operation

Slopes and ramps are a major factor related to loss-of-control and accidents, which can result in severe injury or death. All slopes and ramps require extra caution. If you feel uneasy on a slope, do not mow it.

DO

- Watch for holes, ruts or bumps. Tall grass can hide obstacles.
- Use slow speed so that you will not have to stop while on the slope.
- Use extra care with grass catchers or other attachments. These can change the stability of the machine.
- Keep all movement on slopes slow and gradual. Do not make sudden changes in speed or direction.
- Avoid starting or stopping on a slope. If tires lose traction, disengage the blades.
- Check carefully for overhead clearances (i.e. branches, doorways, electrical wires) before driving under any objects and do not contact them.
- Mow slopes side–to–side.

DO NOT

- Do not mow slopes greater than 15 degrees.
- Avoid turning on slopes. If you must turn, turn slowly and gradually downhill, if possible.
- Do not mow near drop-offs, ditches, or embankments. The machine could suddenly turn over if a wheel goes over the edge of a cliff or ditch, or if an edge caves in.
- Do not mow on wet grass. Reduced traction could cause sliding.
- Do not use a grass catcher on steep slopes. Heavy grass bags could cause loss of control, of the machine.
- Do not mow up and down slopes.

Service

- Never store the machine or fuel container inside where there is an open flame, such as near a water heater or furnace.
- Keep nuts and bolts tight, especially the blade attachment bolts.
- Never tamper with safety devices. Check safety systems for proper operation before each use.
- Use only Toro genuine replacement parts to ensure that original standards are maintained.
- Hydraulic fluid escaping under pressure can penetrate the skin and cause injury. Use cardboard or paper to find hydraulic leaks. Never use your hands.

Slope Chart

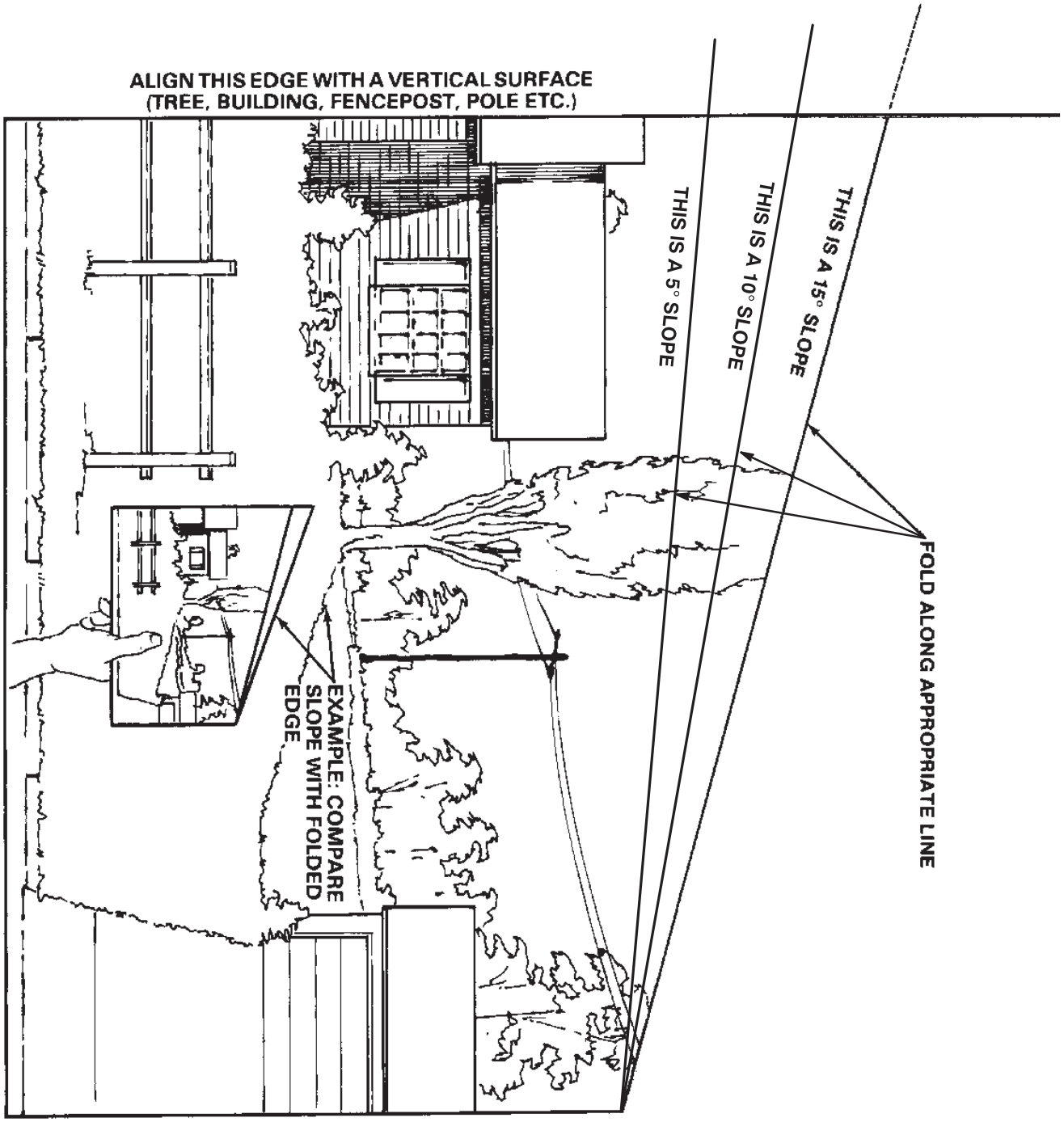
ALIGN THIS EDGE WITH A VERTICAL SURFACE
(TREE, BUILDING, FENCEPOST, POLE ETC.)
THIS IS A 5° SLOPE
THIS IS A 10° SLOPE
THIS IS A 15° SLOPE
FOLD ALONG APPROPRIATE LINE
EXAMPLE: COMPARE SLOPE WITH FOLDED EDGE

Safety and Instruction Decals

Safety decals and instructions are easily visible to the operator and are located near any area of potential danger. Replace any decal that is damaged or lost.



1-430005



1-523552



54-9220



66-1340

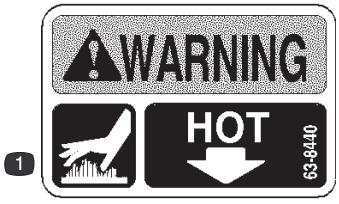

1

63-8440

1. Hot surface



67-5360



95-2814

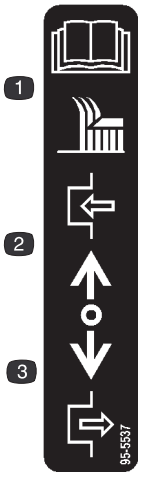

95-5537

1. Read the *Operator's Manual* for instructions on operating the cutting blade
2. Push forward to engage
3. Pull back to disengage



98-0776

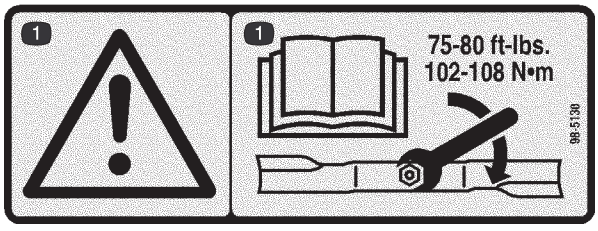

98-5130

1. Warning—read the *Operator's Manual* for instructions on torquing the blade bolt/nut to 75-80 ft.-lb.(102-106 N·m).

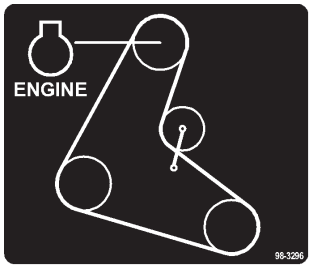

98-3296

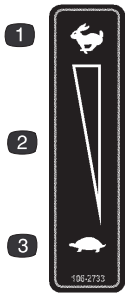

106-2733

1. Fast
2. Continuous variable setting
3. Slow



105-4109



105-4110



106-2743

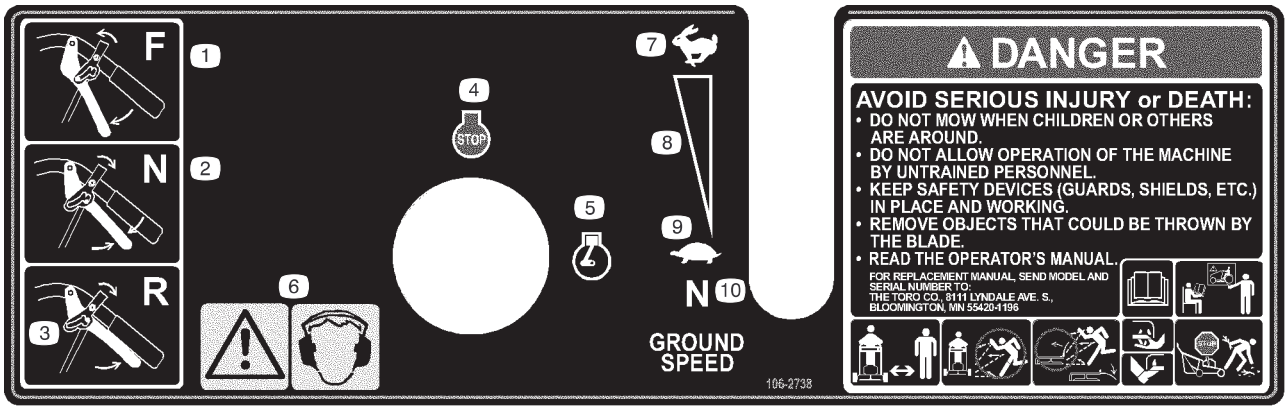

106-2738

1. Forward
2. Neutral
3. Reverse
4. Engine—stop
5. Engine—run
6. Warning—wear hearing protection.
7. Fast
8. Continuous variable setting
9. Slow
10. Neutral

Gasoline and Oil

Recommended Gasoline

Use unleaded regular gasoline suitable for automotive use (85 pump octane minimum). Use leaded regular gasoline if unleaded regular is not available.

Important Never use methanol, gasoline containing methanol, or gasohol containing more than 10% ethanol because the fuel system could be damaged. Do not mix oil with gasoline.

Danger

In certain conditions, gasoline is extremely flammable and highly explosive. A fire or explosion from gasoline can burn you and others and can damage property.

- **Fill the fuel tank outdoors, in an open area, when the engine is cold. Wipe up any gasoline that spills.**
- **Never fill the fuel tank inside an enclosed trailer.**
- **Do not fill the fuel tank completely full. Add gasoline to the fuel tank until the level is 1/4 to 1/2 in. (6 to 13 mm) below the bottom of the filler neck. This empty space in the tank allows gasoline to expand.**
- **Never smoke when handling gasoline, and stay away from an open flame or where gasoline fumes may be ignited by a spark.**
- **Store gasoline in an approved container and keep it out of the reach of children. Never buy more than a 30-day supply of gasoline.**
- **Always place gasoline containers on the ground and away from your vehicle before filling.**
- **Do not fill gasoline containers inside a vehicle or on a truck or trailer bed because interior carpets or plastic truck bed liners may insulate the container and slow the loss of any static charge.**
- **When practical, remove gas-powered equipment from the truck or trailer and refuel the equipment with its wheels on the ground.**
- **If this is not possible, then refuel such equipment on a truck or trailer from a portable container, rather than from a gasoline dispenser nozzle.**
- **If a gasoline dispenser nozzle must be used, keep the nozzle in contact with the rim of the fuel tank or container opening at all times until fueling is complete.**

Warning

Gasoline is harmful or fatal if swallowed. Long-term exposure to vapors can cause serious injury and illness.

- **Avoid prolonged breathing of vapors.**
- **Keep face away from nozzle and gas tank or conditioner opening.**
- **Keep gas away from eyes and skin.**

Using Fuel Stabilizer/Conditioner

Use a fuel stabilizer/conditioner in the machine to provide the following benefits:

- Keeps gasoline fresh during storage of 90 days or less (For longer storage, drain the fuel tank.)
- Cleans the engine while it runs
- Eliminates gum-like varnish buildup in the fuel system, which causes hard starting

Important Do not use fuel additives containing methanol or ethanol.

Add the correct amount of gas stabilizer/conditioner to the gas.

Note: A fuel stabilizer/conditioner is most effective when mixed with fresh gasoline. To minimize the chance of varnish deposits in the fuel system, use fuel stabilizer at all times.

Filling the Fuel Tank

1. Disengage the PTO, turn the ignition key to off, and remove the key.
2. Wait for all moving parts to stop before leaving the operating position and then chock or block tires.
3. Clean around the fuel tank cap and remove the cap. Add unleaded regular gasoline to the fuel tank until the level is 1/4 to 1/2 inch (6 mm to 13 mm) below the bottom of the filler neck. This space in the tank allows gasoline to expand. Do not fill the fuel tank completely full.
4. Install the fuel tank cap securely. Wipe up any spilled gasoline.

Checking the Engine Oil Level

Before you start the engine and use the machine, check the oil level in the engine crankcase; refer to Checking the Engine Oil Level, page 30.

Setup

Note: Determine the left and right sides of the machine from the normal operating position.

Loose Parts

Note: Use the chart below to verify all parts have been shipped.

DESCRIPTION	QTY.	USE
Caster assemblies	2	Installing the front casters
Bolt, 3/8 x 3/4 in.	8	
Flange nut, 3/8 in.	8	
Upper handle	1	Installing the upper handle and wire harness
Flanged bolt, 3/8 x 1 in.	4	
Flanged nut, 3/8 in.	4	
Spring washer	4	
Wire tie	4	
Hairpin cotter	1	Installing the blade control rod
Clevis pin	2	Installing the control rods
Washer	2	
Hairpin cotter	2	
Washer	2	Installing the drive linkage
Hairpin cotter	2	
Clevis pin	1	Installing the speed control rod
Hairpin cotter	2	
Fuel tank	1	Installing the fuel tank
Bolt, 5/16 x 3/4 in.	2	
Lock washer, 5/16 in.	2	
Locknut	2	
Washer, 5/16 in.	4	
Stud	2	
Spring	2	
Operator’s Manual	1	Review before operating machine
Engine Operator’s Manual	1	
Parts Catalog	1	
Video	1	
Registration card	1	Fill out and return to Toro

Installing the Front Casters

1. Align the casters with the holes on the top and front of the mower, and insert 8 bolts (3/8 x 3/4 in.) through the mower. Secure the caster with 8 flange nuts (3/8 in.) below the mower (Fig. 2).

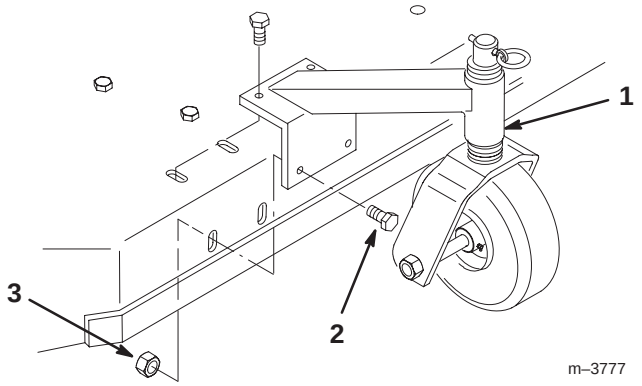

Figure 2

1. Front caster
2. Bolt
3. Flange nut

Note: Tighten the lower bolts first to pull the caster against the front, then tighten the top bolts.

2. Torque the bolts to 30–35 ft.-lb. (40–47 N•m).

Installing the Upper Handle

1. Align the holes in upper handle with the mounting holes in the rear frame and bracket (Fig. 3).

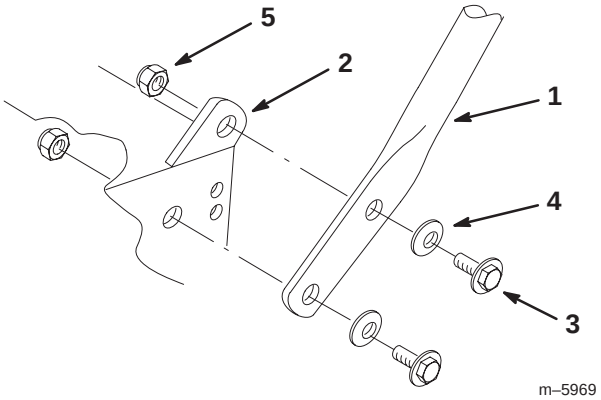

Figure 3

1. Upper handle
2. Rear frame bracket
3. Flange bolt (26 mm)
4. Spring washer
5. Flange nut

Important Install the flange bolts with the bolt head on the outside of the upper handle. Refer to figure 3.

2. Secure each leg of the upper handle to the rear frame and bracket with two flange bolts (3/8 x 1 in. (26 mm), spring washers and flange nuts (Fig. 3). Tighten until spring washers are compressed.

3. Route the wire harness along the inside of the left handle and under the control panel (Fig. 18).

4. Connect the right-angled insulated terminals to the switch (Fig. 4).

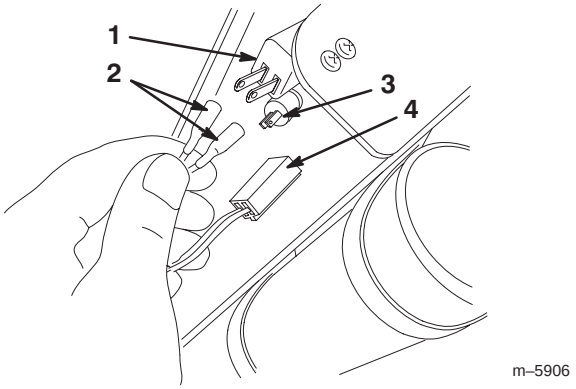

Figure 4

1. Switch
2. Right-angled insulated terminals
3. Key switch
4. Terminal

5. Connect the terminal to the key switch (Fig. 4).

6. Use the wire ties to secure the wire harness to the inside of the left handle, away from the blade control (PTO) rod (Fig. 18). Secure at bottom and top of handle.

Connecting the Throttle Cable

1. Route the throttle cable along the right side of the upper handle, under the fuel tank support, and to the left of the engine.

2. Position the throttle control (Fig. 18) 1/4 in. (6 mm) from the upper end of the slot.

3. Attach the inner wire of the throttle cable to the top hole in the throttle control lever as shown in Figure 5.

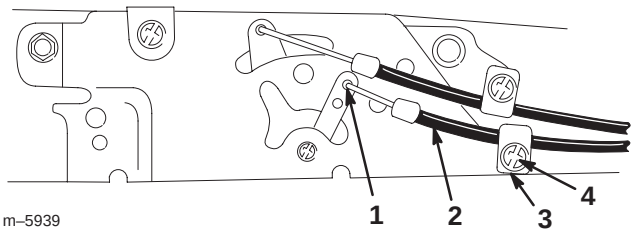

Figure 5

1. Top hole in the throttle control lever
2. Inner wire of throttle cable
3. Cable clamp
4. Cable clamp screw

4. Loosen the cable clamp and insert the cable behind it (Fig. 5).

5. Pull on the cable and move the throttle control to the **Fast** position. Tighten clamp screw.

Installing the Blade Control (PTO) Rod

1. From outer side of bell crank, insert end of blade control (PTO) rod thru hole (Fig. 6).

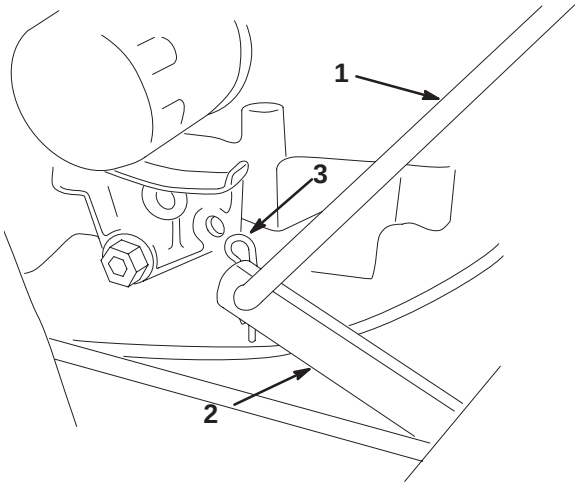

m–5997

Figure 6

1. Blade control (PTO) rod
2. Bell crank
3. Hairpin cotter

2. Secure the blade control (PTO) rod to the bell crank with a hairpin cotter (Fig. 6).

Installing the Control Rods

1. Install the control rod to the drive lever and neutral lock with a clevis pin and washer (Fig. 7). Washer to be positioned between drive lever and neutral lock.

2. Install a hairpin cotter between drive lever and washer and into clevis pin (Fig. 7).

Note: Make sure the clevis pin is inserted into the neutral lock.

3. Repeat this procedure for the opposite side.

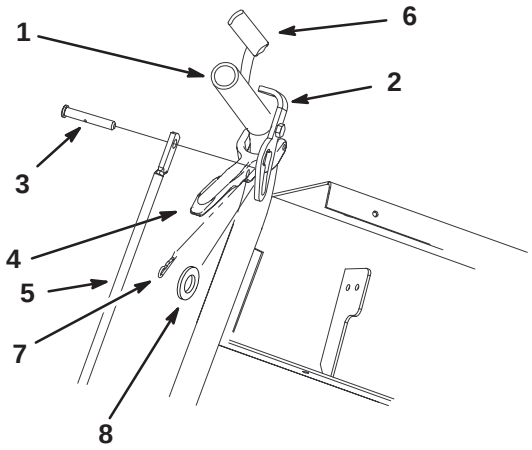

m–5998

Figure 7

1. Left handle shown
2. Neutral lock
3. Clevis pin
4. Drive lever
5. Control rod
6. Operator Presence Control lever (OPC)
7. Hairpin cotter
8. Washer

4. Thread rod fittings equal distance onto each control rod. For a starting point, thread rod fittings onto control rod approximately 2–1/2 in. (63.5 mm) from the bottom (Fig. 8).

5. Install rod fittings to idler brackets with clevis pins and e–ring (Fig. 8).

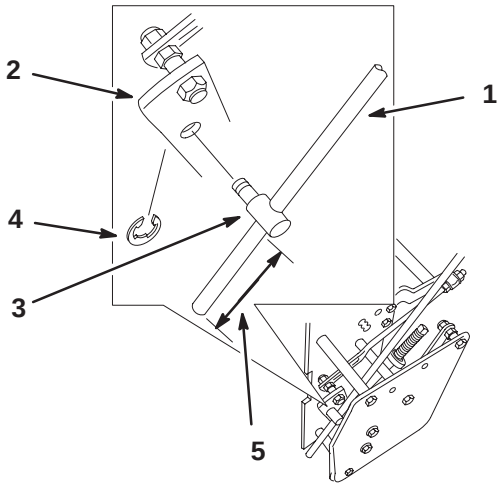

m–5400

Figure 8

1. Control rod
2. Idler bracket
3. Rod fitting
4. E–ring
5. 2–1/2 in. (63.5 mm) from bottom

Installing the Control Arm Rods

1. Insert control arm swivel thru hole in speed control crank and secure with hairpin cotter (Fig. 9).

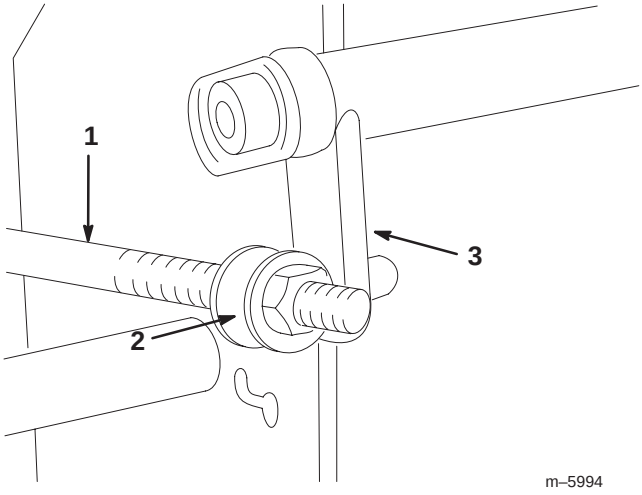

Figure 9

1. Control arm
2. Swivel
3. Speed control crank

2. Repeat this procedure for the opposite side.

Installing the Speed Control Rod

1. Move the speed control lever fully forward (Fig. 10).

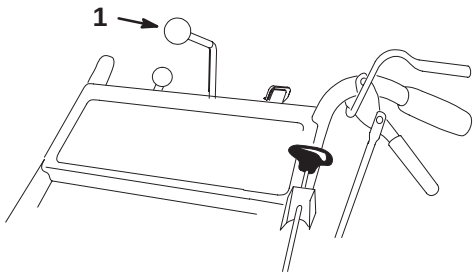

Figure 10

1. Speed control lever

2. Install speed control rod to right side of speed control lever (under control panel) with a hair pin cotter (Fig. 11).

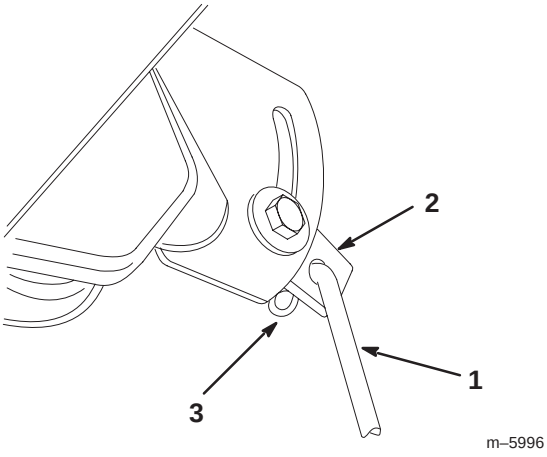

Figure 11

1. Speed control rod
2. Speed control lever
3. Hair pin cotter

3. Install yoke end of speed control rod to the speed control crank with a clevis pin and hairpin cotter (Fig. 12).

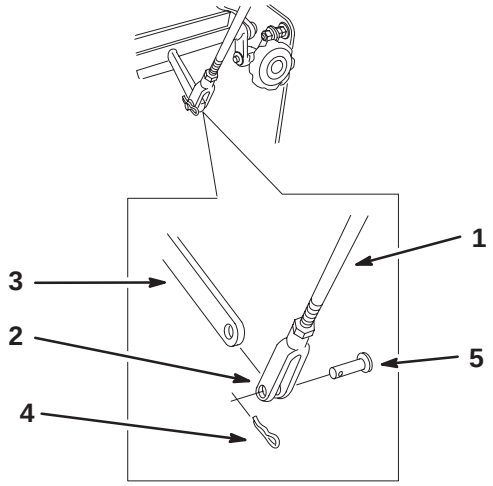

Figure 12

1. Speed control rod
2. Yoke
3. Speed control crank
4. Hair pin cotter
5. Clevis pin

Installing the Fuel Tank

1. Apply retaining adhesive, such as Loctite RC 609 or 680, to the threads of the 2 threaded studs (5/16 x 7/8”in.) supplied in loose parts. Install studs into the two left holes in underside of fuel tank

2. Align the fuel tank to the top of the rear frame, and secure the right side of the fuel tank with 2 bolts (5/16 x 3/4 in.), 2 lock washers (5/16 in.), and 2 washers (5/16 in.) (Fig. 13).

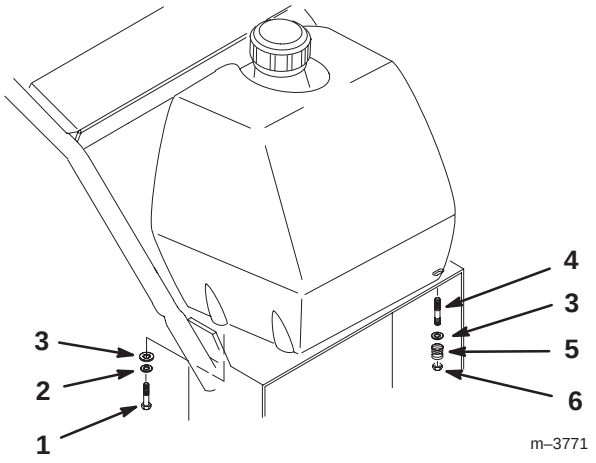

Figure 13

1. Bolt , 5/8 x 7/8 in. (2)
2. Lock washer, 5/16 in. (2)
3. Washer, 5/16 in. (2)
4. Stud (2)
5. Spring (2)
6. Locknut (2)

3. Secure the fuel tank studs to the frame with 2 washers (5/16 in.), 2 springs, and 2 locknuts (5/16 in.) (Fig. 13).

Note: Tighten the left side of the fuel tank until it is completely tight, then unscrew the locknut one full turn. This allows the spring to work.

4. Push the fuel line onto the fuel tank fitting, and secure the fuel line with a hose clamp (Fig. 14).

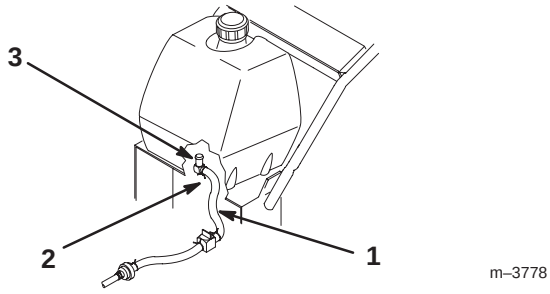

Figure 14

1. Fuel line
2. Hose clamp
3. Fuel fitting

Installing the Muffler

1. Loosen the clamp (Fig. 15).

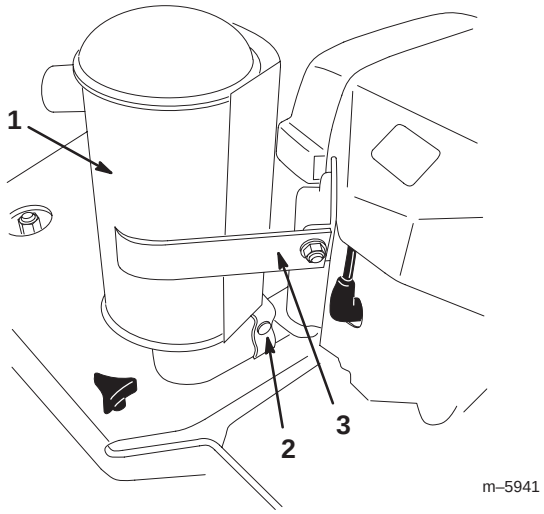

Figure 15

1. Muffler
2. Clamp
3. Muffler bracket

2. Rotate the muffler forward into the position shown in Figure 15.

3. Secure the muffler bracket (Fig. 15) to the engine bracket with the hardware provided.

4. Tighten the clamp.

Hydro Linkage Set Up

Perform the following adjustments when the machine is first set up and when any adjustment is needed. Do them in the order that they are listed here.

Adjust Speed Control Linkage

Refer to Adjusting Speed Control Linkages on page 36.

Adjust Neutral Control Linkages

Refer to Adjusting Neutral Control Linkages on page 37.

Adjust Hydro Control Linkages

Refer to Adjusting Hydro Control Linkages on page 38.

Adjust Control Rods

Refer to Adjusting Control Rods on page 39.

Adjust Tracking

Refer to Adjusting Tracking on page 40.

Checking the Hydraulic Fluid

Check the hydraulic fluid level before engine is first started.

Check the hydraulic fluid level after first 8 operating hours.

Check the hydraulic fluid level after every 25 operating hours.

Fluid Type: Mobil 1 15W-50 synthetic motor oil or equivalent synthetic oil.

Important Use oil specified or equivalent. Other fluids could cause system damage.

Hydraulic System Oil Capacity: 77 oz. (2.3 l)

Note: There are two ways of checking the hydraulic oil. One is when the oil is warm and one is when the oil is cold. The baffle inside the tank has two levels depending if the oil is warm or cold.

1. Position machine on a level surface.
2. Disengage the PTO, turn the ignition key to off, and remove the key.
3. Wait for all moving parts to stop before leaving the operating position and then chock or block tires.
4. Clean area around cap and filler neck of hydraulic tank (Fig. 16).

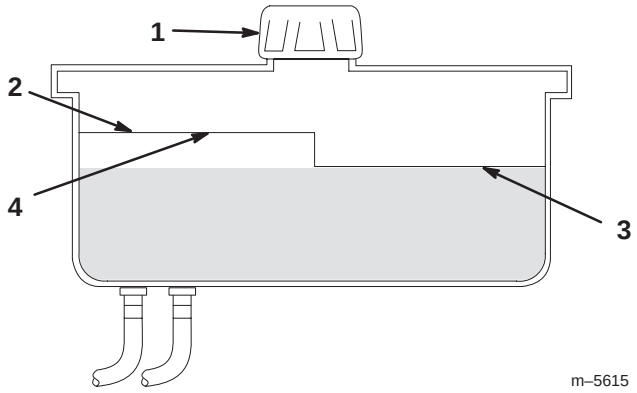

Figure 16

1. Cap
2. Baffle
3. Cold fluid level—full
4. Hot fluid level—full

5. Remove cap from filler neck. Look inside to check if there is fluid in the reservoir. (Fig. 16).
6. If there is no fluid, add fluid to the reservoir until it reaches the ***cold*** level of the baffle.
7. Run the machine at low idle for 15 minutes to allow any air to purge out of the system and warm fluid. Refer to Starting and Stopping the Engine on page 20.
8. Recheck the fluid level while the fluid is warm. If required, add fluid to the reservoir until it reaches the ***hot*** level of the baffle.

Note: The fluid level should be to the top of the ***hot*** level of the baffle, when the fluid is warm (Fig. 16).

9. Install cap on filler neck.

Warning

Hydraulic fluid escaping under pressure can penetrate skin and cause injury.

- **If hydraulic fluid is injected into the skin it must be surgically removed within a few hours by a doctor familiar with this type of injury. Gangrene may result if this is not done.**
- **Keep body and hands away from pin hole leaks or nozzles that eject high pressure hydraulic fluid.**
- **Use cardboard or paper to find hydraulic leaks.**
- **Safely relieve all pressure in the hydraulic system before performing any work on the hydraulic system.**
- **Make sure all hydraulic fluid hoses and lines are in good condition and all hydraulic connections and fittings are tight before applying pressure to hydraulic system.**

Operation

Note: Determine the left and right sides of the machine from the normal operating position.

Think Safety First

Carefully read all the safety instructions and decals in the safety section. Knowing this information could help you, your family, pets or bystanders avoid injury.

The use of protective equipment for eyes, hearing, feet and head is recommended.

Caution

This machine produces sound levels in excess of 85dBA at the operator's ear and can cause hearing loss through extended periods of exposure.

Wear hearing protection when operating this machine.



Figure 17

1. Caution
2. Wear hearing protection

Controls

Become familiar with all the controls (Fig. 18) before you start the engine and operate the machine.

Throttle control – The throttle control has two positions: FAST and SLOW.

Choke—Use the choke to start a cold engine.

Operator Presence Control (OPC) levers – When you squeeze the OPC levers against the handles, the OPC system senses that the operator is in the normal operating position. When you release the OPC levers, the OPC system senses that the operator has left the normal operating position, and the system will stop the engine if either the speed control lever is not in the **Neutral** position or the blade control (PTO) lever is engaged.

Blade control knob (PTO) – Push/pull knob is used in conjunction with OPC levers to drive mower blades.

Speed control lever – This machine has a variable speed control with a neutral position. This controls how fast the machine will travel.

Drive levers – Release drive levers to engage forward traction operation and squeeze to reverse. Squeeze right side of drive lever to turn right and left side to turn left.

Neutral lock – Squeeze drive levers back and move locks to the rear for neutral lock. Squeeze drive levers back and move locks to the front for parking brake lock.

Ignition Switch – Key switch is used in conjunction with recoil starter. Switch has two positions: RUN and OFF.

Recoil Starter – Pull recoil starter handle to start engine.

Fuel Shut–off Valve – (Inline) Close fuel shut–off valve when transporting or storing mower.

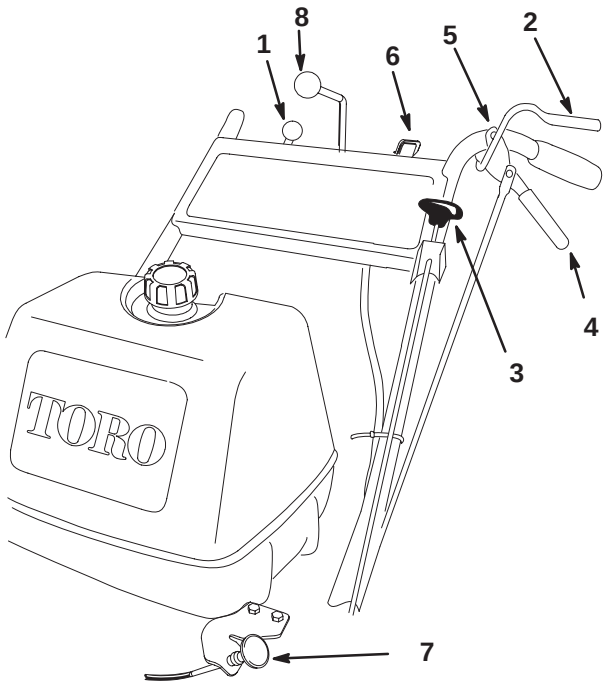

Figure 18

1. Throttle control
2. Operator Presence Control levers (OPC)
3. Blade control knob (PTO)
4. Drive lever
5. Neutral lock
6. Ignition switch
7. Choke
8. Speed control lever

Starting and Stopping the Engine

Starting

1. Connect the wires to the spark plugs.
2. Open the fuel valve.

Note: A cold weather staring kit has been incorporated to assist engine starting in cold weather or when the unit has not been run for a period of time.

To use cold start kit:

- Grasp split ring (Fig. 19) on right side of machine, pull ring and chain straight out from side of machine and hook ring over control shield bolt.

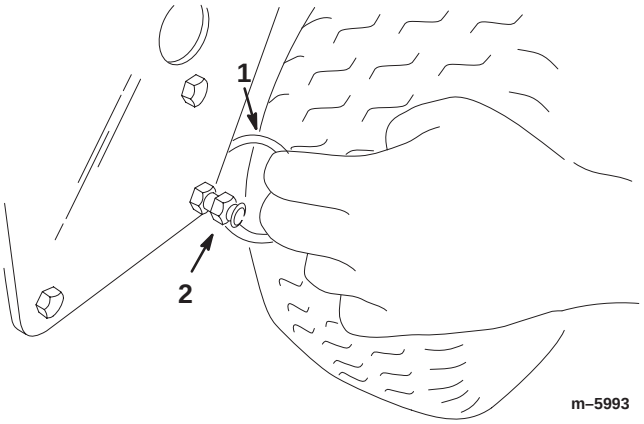

Figure 19

1. Split ring
2. Control shield bolt

- After engine is started, pull chain straight out from side of machine until ring can be removed from shield bolt. Slowly release tension on chain.

3. Disengage the blade control (PTO) and move the speed control lever to neutral.
4. Move the drive levers to neutral and set the neutral locks.
5. Move the speed control lever to neutral.
6. Turn the ignition key to the **Run** position.
7. Move the throttle control midway between the **Fast** and **Slow** positions before starting a cold engine.
8. Pull the choke knob out.
9. Grasp the recoil starter handle firmly and pull it out until positive engagement results; then pull the handle vigorously to start the engine. Allow the rope to recoil slowly.

Stopping

1. Move the throttle lever to “SLOW” (Fig. 20).
2. Move drive levers to neutral and set neutral locks.
3. Disengage the blade control (PTO) and move the speed control lever to neutral.
4. Let engine idle for 30 to 60 seconds before turning the ignition key “OFF.”
5. Turn the ignition key to “OFF” (Fig. 20).

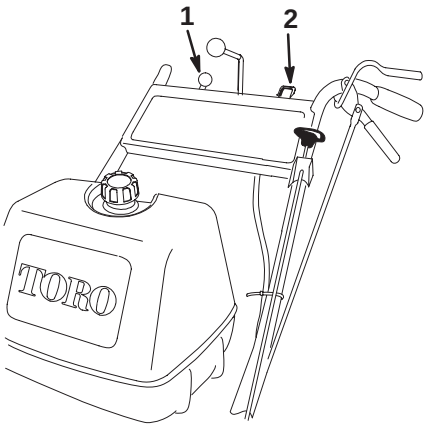

Figure 20

1. Throttle lever
2. Ignition key

Important Make sure fuel shut off valve is closed before transporting or storing machine, as fuel leakage may occur.

Before storing machine, pull wire off spark plug(s) to prevent possibility of accidental starting.

Operating Neutral Locks

Always set the neutral lock when you stop the machine. Chock or block wheels if it is left unattended.

Setting the Neutral Lock

1. Squeeze the drive levers back.
2. Place thumbs on the upper part of of locks and move them back (Fig. 21).

Releasing the Neutral Lock

1. Squeeze the drive levers back.
2. Place thumbs on the upper part of of locks and move them forward until in forward slot (Fig. 21).

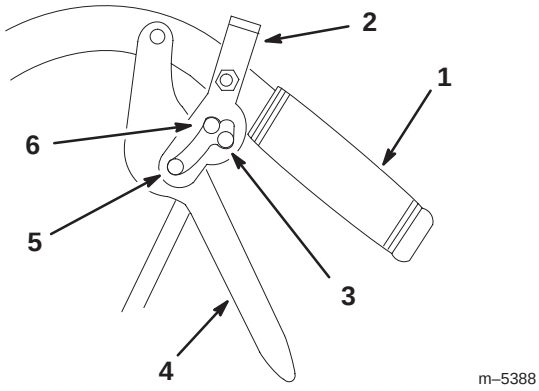

Figure 21

1. Handle
2. Neutral lock
3. Neutral position
4. Drive lever
5. Full speed forward
6. Reverse position

Operating Mower Blade Control (PTO)

The blade control knob (PTO) is used in conjunction with the Operator Presence Control (OPC) levers to engage and disengage the mower blades.

Engaging the Mower Blades (PTO)

1. To engage blades, squeeze the Operator Presence Control (OPC) levers against handle grips (Fig. 22).
2. Pull blade knob (PTO) up. Hold the OPC levers against handle grip.

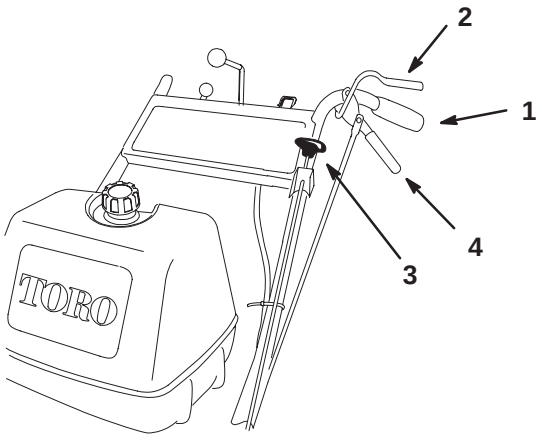

Figure 22

1. Handle
2. Operator Presence Control levers (OPC)
3. Blade control knob (PTO)
4. Drive Lever

Disengaging the Mower Blades (PTO)

The mower blades can be disengaged by one of the following steps.

1. Push the blade control knob (PTO) down to off (Fig. 22).
2. Release Operator Presence Control (OPC) levers to disengage blades (Fig. 22). This will also kill the engine.

The Safety Interlock System

Caution

If safety interlock switches are disconnected or damaged the machine could operate unexpectedly causing personal injury.

- **Do not tamper with the interlock switches.**
- **Check the operation of the interlock switches daily and replace any damaged switches before operating the machine.**

Understanding the Safety Interlock System

The safety interlock system is designed to prevent the mower from starting unless:

- The blade control knob (PTO) is pushed off.
- The speed control lever is in neutral.

The safety interlock system is designed to kill the engine when:

- The Operator Presence Control (OPC) levers are released.
- The speed control lever is shifted out of neutral without holding OPC levers.
- The blade control knob (PTO) is pulled up without holding the OPC levers.

Testing the Safety Interlock System

Test the safety interlock system before you use the machine each time. If the safety system does not operate as described, have an Authorized Service Dealer repair the safety system immediately.

1. Set the neutral locks and place speed control lever in neutral. Start the engine; refer to Starting and Stopping the Engine, page 20.
2. Without holding the Operator Presence Control (OPC) levers, pull the blade control knob (PTO) up. **The engine should kill.**

3. Push the blade control knob down to off.
4. With engine running, hold down the OPC levers. Pull the blade control knob (PTO) up. The clutch should engage and **the mower blades begin rotating.**
5. Release the OPC levers. **The engine should kill.**
6. With the engine running, move the speed control lever forward. Release the OPC levers. **The engine should kill.**
7. If all the above conditions are not met have an Authorized Service Dealer repair the safety system immediately.

Driving Forward or Backward

The throttle control regulates the engine speed as measured in rpm (revolutions per minute). Place the throttle control in the "FAST" position for best performance.

Forward

1. To go forward, move the speed control lever to desired speed.
2. Release the neutral lock. Refer to Releasing the Neutral Lock on page 20.
3. Slowly release the drive levers to move forward (Fig. 23).

To go straight, release drive levers equally (Fig. 23).

To turn, squeeze the drive lever on the side and direction you want to turn (Fig. 23).

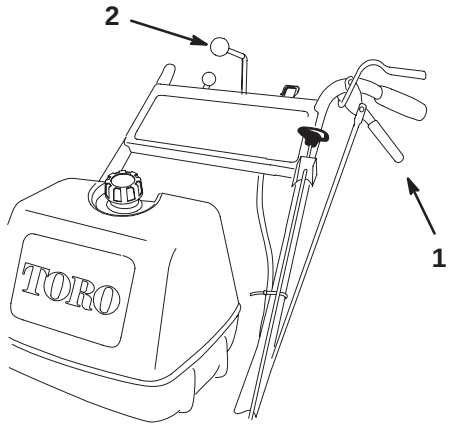

Figure 23

1. Drive lever
2. Speed control lever

Backward

1. To go backward, move the speed control lever to desired speed.
2. Release the neutral lock. Refer to Releasing the Neutral Locks on page 20.
3. Slowly squeeze the drive levers back together to move rearward (Fig. 23).

Bringing Machine to Neutral Position

Always set the neutral lock when you stop the machine. Chock or block wheels if it is left unattended.

1. Squeeze the drive levers back.
2. Set the neutral locks. Refer to Operating Neutral Locks on page 20.
3. Move speed control lever to neutral position.

Stopping the Machine

1. To stop the machine, squeeze the drive levers and engage neutral locks.
2. Move neutral locks into the neutral position. Refer to Operating Neutral Locks on page 20.
3. Move speed control lever into neutral.
4. Turn the ignition key to "OFF" to stop the engine.

Note: Remember to remove the key from the ignition switch if you leave the machine.

5. Wait for all moving parts to stop before leaving the operating position and then chock or block tires.

Caution

Children or bystanders may be injured if they move or attempt to operate the machine while it is unattended.

Always remove the ignition key and set the parking brake when leaving the machine unattended, even if just for a few minutes.

Pushing the Machine by Hand

The by–pass valves allow the machine to be pushed by hand without the engine running.

Important Always push the machine by hand. Never tow the machine because hydraulic damage may occur.

To Push the Machine

1. Disengage the blade control (PTO) and turn the ignition key to “OFF” to stop the engine.
2. Rotate the by-pass valves open 1/2 turn. This allows hydraulic fluid to by-pass the pumps and the wheels to turn (Fig. 24).
3. When closing by-pass valves, do not overtighten.

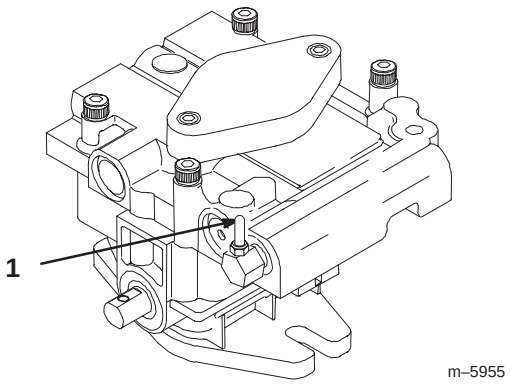

Figure 24

1. By-pass valve

m-5955

Important Do not start or operate the machine with the by–pass valves open. Damage to system may occur.

Transporting Machines

Use a heavy-duty trailer or truck to transport the machine. Ensure that the trailer or truck has all necessary lighting and marking as required by law. Please carefully read all the safety instructions. Knowing this information could help you, your family, pets or bystanders avoid injury.

To transport the machine:

- Chock and block wheels.
- Securely fasten the machine to the trailer or truck with straps, chains, cable, or ropes.
- Secure a trailer to towing vehicle with safety chains.

Side Discharge or Mulch Grass

This mower has a hinged grass deflector that disperses clippings to the side and down toward the turf.

Danger

Without the grass deflector, discharge cover, or complete grass catcher assembly mounted in place, you and others are exposed to blade contact and thrown debris. Contact with rotating mower blade(s) and thrown debris will cause injury or death.

- **Never remove the grass deflector from the mower because the grass deflector routes material down toward the turf. If the grass deflector is ever damaged, replace it immediately.**
- **Never put your hands or feet under the mower.**
- **Never try to clear discharge area or mower blades unless you release the bail and the power take off (PTO) is off. Rotate the ignition key to “OFF.” Also remove the key and pull the wire off the spark plug(s).**

Adjusting the Height-of-Cut

This machine has a 1 to 4-1/4 in. (26 to 108 mm) range for height-of-cut. This can be achieved by adjusting blade spacers, rear axle height and front caster spacers. Use the Height-of-Cut chart on page 25 to select the combination required

Adjusting the Blade Height

Adjust the Blades by using the 4 spacers (1/4 in.) spacers on the blade spindle bolts. This allows a range, in 1/4 in. (6 mm) increments, of cutting height in any axle position. Use the same number of blade spacers on all blades to achieve a level cut (2 above and 2 below, 1 above and 3 below, etc.).

1. Disengage the PTO, turn the ignition key to off, and remove the key.
2. Stop the engine, remove the key, and wait for all moving parts to stop before leaving the operating position. Chock or block tires
3. Hold the blade bolt and remove the nut. Slide the bolt down through the spindle, and change the spacers as needed (Fig. 25).

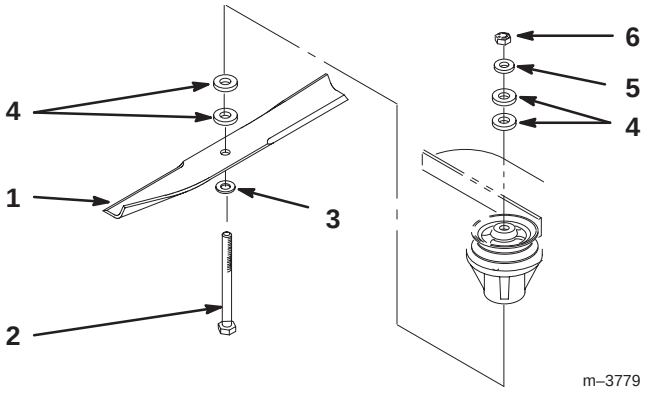

Figure 25

1. Blade
2. Blade bolt
3. Cone washer
4. Spacer
5. Thin washer
6. Nut

4. Insert a bolt, add extra spacers, and secure them with a thin washer and a nut (Fig. 25).

5. Torque the blade bolt to 75–80 ft.-lb. (101–108 N•m).

Adjusting the Axle Height

You can obtain the desired height-of-cut range by adjusting the rear axle and placing the caster spacers above or below the caster arm (refer to the Height-of-cut Chart, page 25).

1. Disengage the PTO, turn the ignition key to off, and remove the key.

2. Wait for all moving parts to stop before leaving the operating position and then chock or block tires.

3. Place a jack under the rear center of the engine frame. Raise the back end of the engine frame up enough to remove the drive wheels.

4. Remove the drive wheels.

5. Loosen, but do not remove, the 2 axle pivot bolts (Fig. 26).

6. Remove the 2 axle adjustment bolts (Fig. 26).

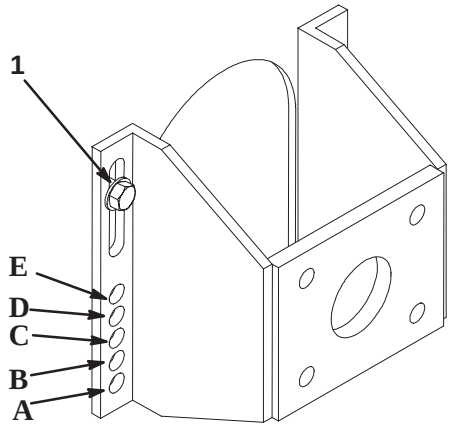

Figure 26

1. Axle pivot bolt

7. Raise or lower the mounting bracket, so that you can install the 2 axle adjustment bolts in the desired hole location (Fig. 26). A tapered punch can be used to help align the holes.

8. Tighten all 4 bolts.

9. Install drive wheels and lower the mower.

Adjusting the Caster Position

1. Using the Height-of-Cut Chart (on page 25), adjust the caster spacers to match with the axle hole selected (Fig. 27).

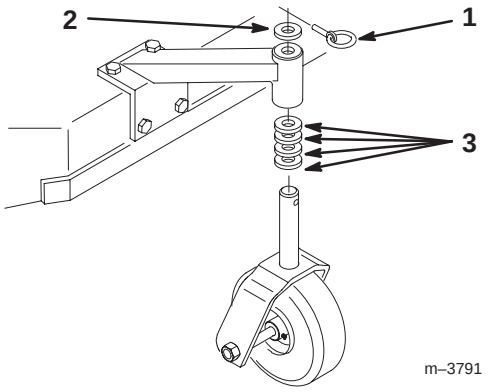

Figure 27

1. Clevis pin
2. Spacer, 3/16 in. (5 mm)
3. Spacer, 1/2 in. (13 mm)

2. Remove the clevis pin, slide the caster from the support, and change the spacers (Fig. 27).

3. Install the caster in the support and insert the clevis pin (Fig. 27).

Height-of-Cut Chart

Axle Position	No. of Spacers Below Caster		Number of 1/4 in. Blade Spacers Below Spindle				
	1/2 in. (13mm)	3/16 in. (5 mm)	4	3	2	1	0
A	0	0	1 in. (26 mm)	1–1/4 in. (32 mm)	1–1/2 in. (38 mm)	1–3/4 in. (45 mm)	2 in. (45 mm)
A	0	1	1–1/8 in. (29 mm)	1–3/8 in. (35 mm)	1–5/8 in. (41 mm)	1–7/8 in. (48 mm)	2–1/8 in. (55 mm)
A	1	0	1–3/8 in. (35 mm)	1–5/8 in. (41 mm)	1–7/8 in. (48 mm)	2–1/8 in. (55 mm)	2–3/8 in. (55 mm)
B	0	1	1–3/8 in. (35 mm)	1–5/8 in. (41 mm)	1–7/8 in. (48 mm)	2–1/8 in. (55 mm)	2–3/8 in. (61 mm)
B	1	0	1–5/8 in. (41 mm)	1–7/8 in. (48 mm)	2–1/8 in. (55 mm)	2–3/8 in. (61 mm)	2–5/8 in. (67 mm)
B	1	1	1–3/4 in. (45 mm)	2 in. (52 mm)	2–1/4 in. (58 mm)	2–1/2 in. (64 mm)	2–3/4 in. (70 mm)
B	2	0	2 in. (45 mm)	2–1/4 in. (58 mm)	2–1/2 in. (64 mm)	2–3/4 in. (70 mm)	3 in. (76 mm)
C	1	1	1–7/8 in. (48 mm)	2–1/8 in. (55 mm)	2–3/8 in. (61 mm)	2–5/8 in. (67 mm)	2–7/8 in. (73 mm)
C	2	0	2–1/8 in. (55 mm)	2–3/8 in. (61 mm)	2–5/8 in. (67 mm)	2–7/8 in. (73 mm)	3–1/8 in. (79 mm)
C	2	1	2–1/4 in. (58 mm)	2–1/2 in. (64 mm)	2–3/4 in. (70 mm)	3 in. (76 mm)	3–1/4 in. (82 mm)
C	3	0	2–1/2 in. (64 mm)	2–3/4 in. (70 mm)	3 in. (76 mm)	3–1/4 in. (82 mm)	3–1/2 in. (89 mm)
D	2	1	2–3/8 in. (61 mm)	2–5/8 in. (67 mm)	2–7/8 in. (73 mm)	3–1/8 in. (79 mm)	3–3/8 in. (86 mm)
D	3	0	2–1/2 in. (64 mm)	2–3/4 in. (70 mm)	3 in. (76 mm)	3–1/4 in. (82 mm)	3–1/2 in. (89 mm)
D	3	1	2–3/4 in. (70 mm)	3 in. (76 mm)	3–1/4 in. (82 mm)	3–1/2 in. (89 mm)	3–3/4 in. (96 mm)
D	4	0	3 in. (76 mm)	3–1/4 in. (82 mm)	3–1/2 in. (89 mm)	3–3/4 in. (96 mm)	4 in. (102 mm)
E	3	1	2–7/8 in. (73 mm)	3–1/8 in. (79 mm)	3–3/8 in. (86 mm)	3–5/8 in. (92 mm)	3–7/8 in. (99 mm)
E	4	0	3–1/8 in. (79 mm)	3–3/8 in. (86 mm)	3–5/8 in. (92 mm)	3–7/8 in. (99 mm)	4–1/8 in. (105 mm)
E	4	1	3–1/4 in. (82 mm)	3–1/2 in. (89 mm)	3–3/4 in. (96 mm)	4 in. (102 mm)	4–1/4 in. (108 mm)

Maintenance

Note: Determine the left and right sides of the machine from the normal operating position.

Recommended Maintenance Schedule

Maintenance Service Interval	Maintenance Procedure
Each Use	• Engine Oil—check level • Safety System—check • Engine—clean outside • Mower Housing—clean
After first 5 hours	• Engine Oil—change
After first 8 Hours	• Hydraulic Oil—check
8 Hours	• Cutting Blades—check • Mower Housing—clean • Caster Wheels—grease • Caster Spindles—grease
25 Hours	• Foam Air Cleaner—service[1] • Paper Air Cleaner—clean[1]
40 Hours	• Mower Deck Idler Pivot—grease • Pump Drive Idler Pivot—grease • Pump Control—grease • Tires—check pressure • Hydraulic Oil—check
50 Hours	• Belts—check for wear/cracks
100 Hours	• Engine Oil—change[1] • Spark Plug(s)—check • Engine—clean outside • Paper Air Cleaner—replace[1] • Hydraulic lines—check • PTO Engagement Bellcrank—grease
After first 200 Hours	• Hydraulic oil filter—change
200 Hours	• Oil Filter—change (200 hours or every other oil change) • Fuel Filter—replace
At storage or 400 Hours	• Hydraulic oil filter—change • Chipped Surfaces—paint • Perform all maintenance procedures listed above before storage

[1]More often in dusty, dirty conditions.

Important Refer to your engine operator's manual for additional maintenance procedures.

Caution

Someone could accidently start the engine and seriously injure you or other bystanders.

Disconnect the wires from the spark plugs before you do any maintenance. Set the wire aside so that it does not accidentally contact the spark plug.

Servicing the Cutting Blades

To ensure a superior quality of cut, keep the blades sharp. For convenient sharpening and replacement, keep extra blades on hand.

Warning

A worn or damaged blade can break, and a piece of the blade could be thrown into the operator's or bystander's area, resulting in serious personal injury or death.

- **Inspect the blades periodically for wear or damage.**
- **Replace a worn or damaged blade.**

Before Inspecting or Servicing the Blades

1. Park the machine on a level surface and disengage the blade control (PTO).
2. Stop the engine, remove the key, and wait for all moving parts to stop before leaving the operating position. Chock or block tires

Inspecting the Blades

1. Inspect the cutting edges (Fig 28). If the edges are not sharp or have nicks, remove and sharpen the blades. Refer to Sharpening the Blades, page 28.

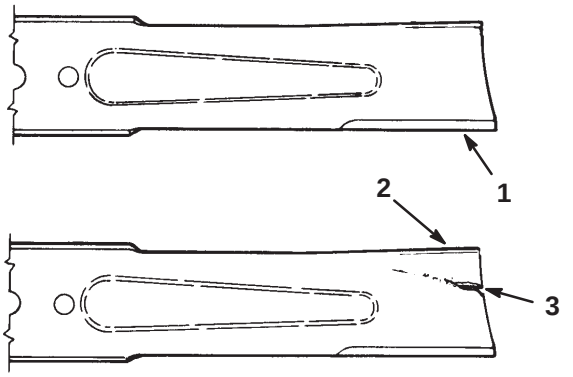

m–151

Figure 28

1. Cutting edge
2. Curved area
3. Wear/slot forming

2. Inspect the blades, especially the curved area (Fig. 28). If you notice any damage, wear, or a slot forming in this area (item 3 in Fig. 28), immediately install a new blade.

Checking for Bent Blades

1. Rotate the blades until the ends face forward and backward (Fig. 29).

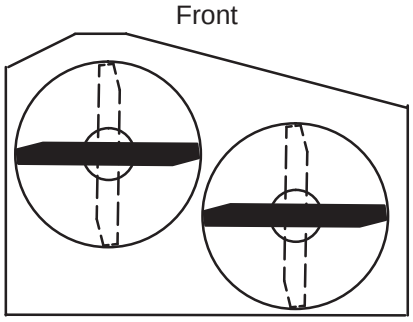

1666

Figure 29

2. Measure from a level surface to the cutting edge of the blades (Fig. 30). Note this dimension.

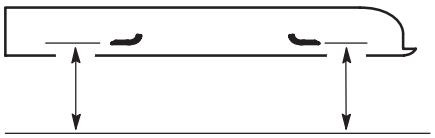

MEASURE FROM CUTTING EDGE TO A LEVEL SURFACE

m–2558

Figure 30

3. Rotate the opposite ends of the blades forward.
4. Measure from a level surface to the cutting edge of the blades at the same position as in step 1 above. The difference between the dimensions obtained in steps 1 and 2 must not exceed 1/8 in. (3 mm).

   Note: If this dimension exceeds 1/8 in. (3 mm), the blade is bent and must be replaced. Refer to Removing the Blades, page 28 and Installing the Blades, page 29.

Warning

A blade that is bent or damaged could break apart and could seriously injure or kill you or bystanders.

- **Always replace bent or damaged blade with a new blade.**
- **Never file or create sharp notches in the edges or surfaces of blade.**

Removing the Blades

Replace the blades if you hit a solid object or if a blade is out of balance or bent. To ensure optimum performance and continued safety conformance of the machine, use genuine Toro replacement blades. Replacement blades made by other manufacturers may result in non-conformance with safety standards.

1. Hold the blade bolt with a wrench.
2. Remove the nut, blade bolt, cone washer, blade, spacers, and thin washer from the spindle (Fig. 31).

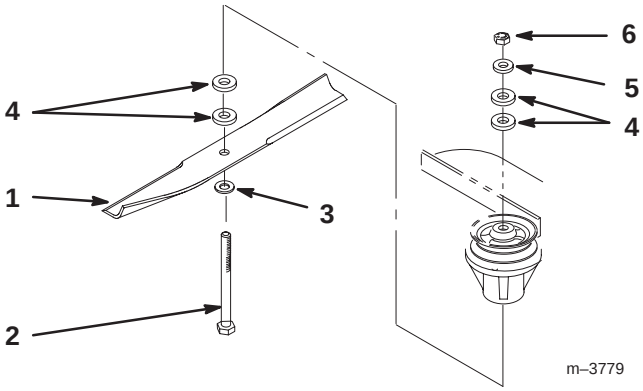

Figure 31

1. Blade
2. Blade bolt
3. Cone washer
4. Spacer
5. Thin washer
6. Nut

Sharpening the Blades

1. Use a file to sharpen the cutting edge at both ends of the blade (Fig. 32). Maintain the original angle. The blade retains its balance if the same amount of material is removed from both cutting edges.

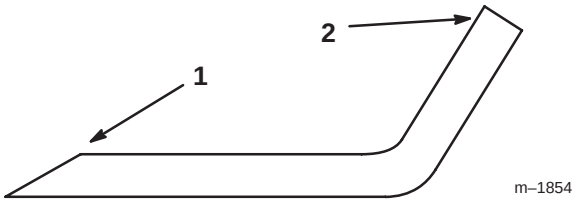

Figure 32

1. Sharpen at original angle
2. Sail

2. Check the balance of the blade by putting it on a blade balancer (Fig. 33). If the blade stays in a horizontal position, the blade is balanced and can be used. If the blade is not balanced, file some metal off the end of the sail area only (Fig. 32). Repeat this step until the blade is balanced.

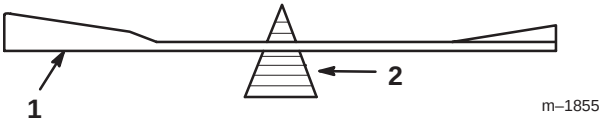

Figure 33

1. Blade
2. Balancer

Installing the Blades

1. Place the blade onto the bolt and over the cone washer. Select the proper number of spacers for the height-of-cut and slide the bolt into the spindle (Fig. 31).

Important The curved part of the blade must point upward toward the inside of the mower to ensure proper cutting.

2. Install the remaining spacers and secure them with a thin washer and a nut (Fig. 31).
3. Torque the blade bolt to 75–80 ft.-lb. (101–108 N•m).

Servicing the Air Cleaner

Service Interval/Specification

Foam element: Clean and oil it after every 25 operating hours.

Paper element: Clean it after every 50 operating hours. Replace it after every 200 operating hours.

Note: Service the air cleaner more frequently (every few operating hours) if the operating conditions are extremely dusty or sandy.

Removing the Foam and Paper Elements

1. Disengage the PTO, turn the ignition key to off, and remove the key.
2. Wait for all moving parts to stop before leaving the operating position and then chock or block tires.
3. Clean around the air cleaner to prevent dirt from getting into the engine and causing damage. Pull out the retaining locks and remove the air cleaner cover (Fig. 34).
4. Unscrew the nut and remove the air cleaner assembly (Fig. 34).
5. **Carefully** pull the foam element off the paper element (Fig. 34).

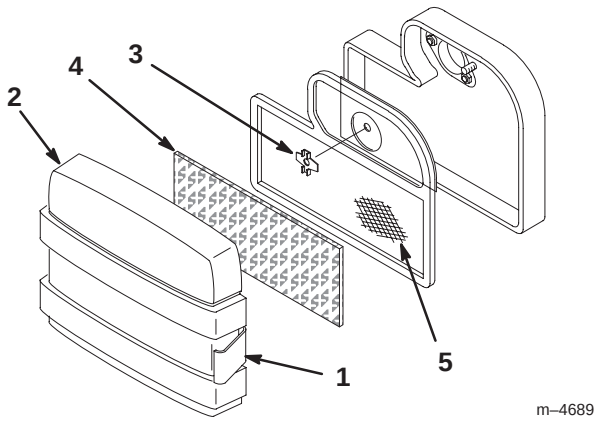

Figure 34

1. Retaining lock
2. Cover
3. Nut
4. Foam element
5. Paper element

Cleaning the Foam Element

1. Wash the foam element in liquid soap and warm water. When the element is clean, rinse it thoroughly.
2. Dry the element by squeezing it in a clean cloth.
3. Put one or two ounces of oil on the element (Fig. 35), and squeeze the element to distribute the oil.

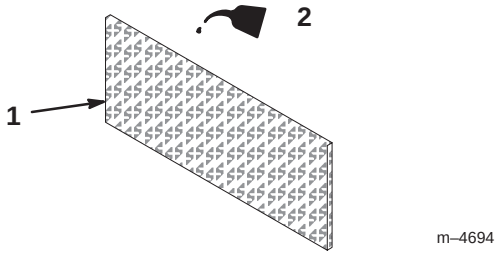

Figure 35

1. Foam element
2. Oil

Important Replace the foam element if it is torn or worn.

Cleaning the Paper Element

1. Lightly tap the element on a flat surface to remove dust and dirt (Fig. 36).

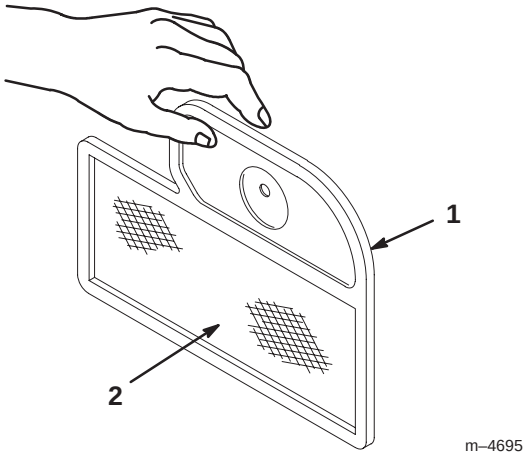

Figure 36

1. Paper element
2. Rubber seal

2. Inspect the element for tears, an oily film, and damage to the rubber seal.

Important Never clean the paper element with pressurized air or liquids, such as solvent, gas, or kerosene. Replace the paper element if it is damaged, defective, or cannot be cleaned thoroughly.

Installing the Foam and Paper Elements

Important To prevent engine damage, always operate the engine with the complete foam and paper air cleaner assembly installed.

1. Carefully slide the foam element onto the paper air cleaner element (Fig. 34).
2. Place the air cleaner assembly onto the air cleaner base and secure it with the nut (Fig. 34).
3. Install the air cleaner cover and secure the retaining locks (Fig. 34).

Servicing the Engine Oil

Service Interval/Specification

Change the engine oil:

- After the first 8 operating hours
- After every 100 operating hours

Note: Change the oil more frequently when the operating conditions are extremely dusty or sandy.

Oil Type: Detergent oil (API service SE/CC, SE, SF, or SG)

Crankcase Capacity: with filter, 57.5 oz. (1.6 l); without filter, 51 oz. (1.4 l)

Viscosity: Refer to the table below

USE THESE SAE VISCOSITY OILS

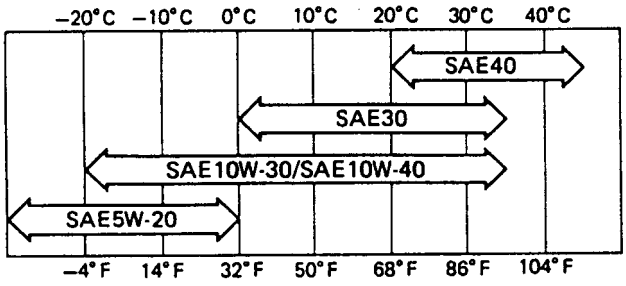

Checking the Engine Oil Level

1. Park the machine on a level surface.
2. Disengage the PTO, turn the ignition key to off, and remove the key.
3. Wait for all moving parts to stop before leaving the operating position and then chock or block tires.
4. Clean around the oil dipstick (Fig. 37) so that dirt cannot fall into the filler hole and damage the engine.

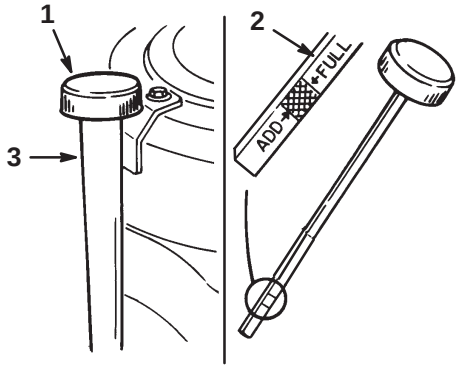

Figure 37

1. Oil dipstick
2. Metal end
3. Filler tube

5. Unscrew the oil dipstick and wipe the metal end clean (Fig. 37).
6. Slide the oil dipstick fully into the filler tube, but do not thread onto tube (Fig. 37).
7. Pull the dipstick out and look at the metal end. If the oil level is low, slowly pour only enough oil into the filler tube to raise the level to the **Full** mark.

Important Do not overfill the crankcase with oil and run the engine; engine damage can result.

Changing the Oil

1. Start the engine and let it run five minutes. This warms the oil so that it drains better.
2. Park the machine so that the drain side is slightly lower than the opposite side to ensure that the oil drains completely.
3. Disengage the PTO, turn the ignition key to off, and remove the key.
4. Wait for all moving parts to stop before leaving the operating position and then chock or block tires.
5. Place a pan under the oil drain hole in the engine frame. Remove the oil drain plug (Fig. 38).

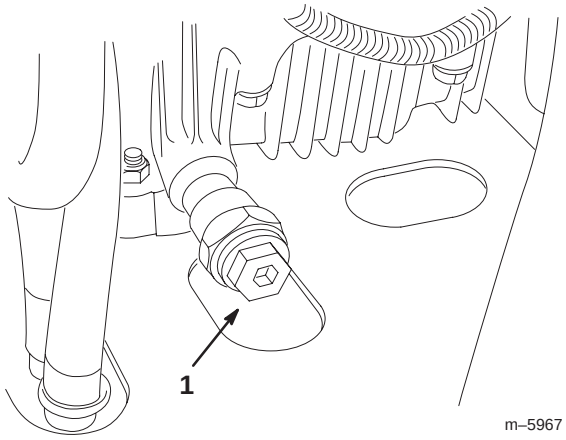

Figure 38

1. Oil drain plug

6. When oil has drained completely, install the oil drain plug.

Note: Dispose of the used oil at a certified recycling center.

7. Slowly pour approximately 80% of the specified oil (refer to Service Interval/Specification, page 30) into the filler cap (Fig. 37).
8. Check the oil level; refer to Checking Oil Level, page 30.
9. Slowly add the additional oil to bring it to the **Full** mark.

Changing the Oil Filter

Replace the oil filter every 200 operating hours or every other oil change.

Note: Change the oil filter more frequently when the operating conditions are extremely dusty or sandy.

1. Drain the oil from the engine; refer to Changing the Oil, page 31.
2. Remove the old filter (Fig. 39).

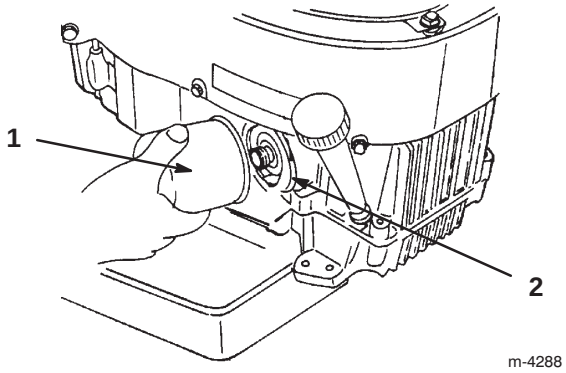

Figure 39

1. Oil filter
2. Adapter

3. Apply a thin coat of new oil to the rubber gasket on the replacement filter (Fig. 39).
4. Install the replacement oil filter to the filter adapter, turn the oil filter clockwise until the rubber gasket contacts the filter adapter, then tighten the filter an additional 3/4 turn (Fig. 39).
5. Fill the crankcase with the proper type of new oil; refer to Changing the Oil, page 31.

Servicing the Spark Plugs

Service Interval/Specification

Check the spark plugs after every 100 operating hours. Ensure that the air gap between the center and side electrodes is correct before installing the spark plug. Use a spark plug wrench for removing and installing the spark plugs and a gapping tool/feeler gauge to check and adjust the air gap. Install a new spark plugs if necessary.

Type: Champion® RCJ-8Y, NGK® BPR4ES, or equivalent
Air Gap: 0.030 in. (0.75 mm)

Removing the Spark Plugs

1. Disengage the PTO, turn the ignition key to off, and remove the key.
2. Wait for all moving parts to stop before leaving the operating position and then chock or block tires.
3. Disconnect the wires from the spark plugs (Fig. 40).

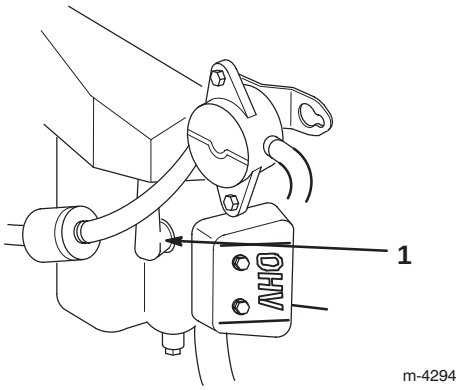

Figure 40

1. Spark-plug (2)

4. Clean around the spark plugs to prevent dirt from falling into the engine and potentially causing damage.
5. Remove the spark plugs and the metal washers.

Checking the Spark Plugs

1. Look at the center of the spark plugs (Fig. 41). If you see light brown or gray on the insulator, the engine is operating properly. A black coating on the insulator usually means that the air cleaner is dirty.

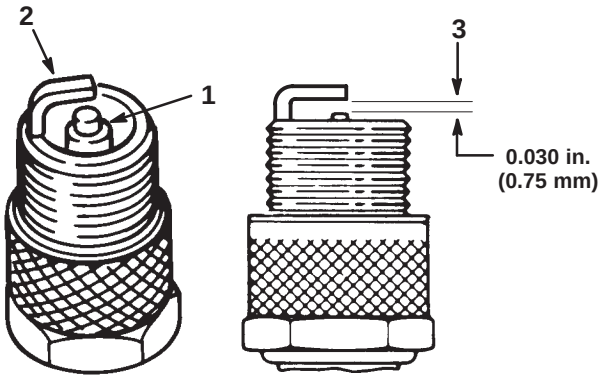

Figure 41

1. Center electrode insulator
2. Side electrode
3. Air gap (not to scale)

Important Never clean the spark plugs. Always replace the spark plugs when it has a black coating, worn electrodes, an oily film, or cracks.

2. Check the gap between the center and side electrodes (Fig. 41). Bend the side electrode (Fig. 41) if the gap is not correct.

Installing the Spark Plugs

1. Install the spark plugs and the metal washer. Ensure that the air gap is set correctly.
2. Tighten the spark plugs to 11 ft.-lb. (15 N.m).
3. Connect the wires to the spark plugs (Fig. 40).

Checking the Tire Pressure

Service Interval/Specification

Maintain the air pressure in the front and rear tires as specified. Check the pressure at the valve stem after every 50 operating hours or monthly, whichever occurs first (Fig. 42). Check the tires when they are cold to get the most accurate pressure reading.

Pressure: 15 psi (103 kPa) rear tires
25–30 psi (172–207 kPa) caster tires

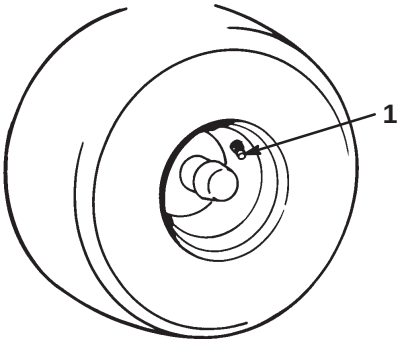

Figure 42

1. Valve stem

Cleaning the Cooling System

Service Interval/Specification

Before each use, check and clean engine cooling system. Remove any buildup of grass, dirt or other debris from the cylinder and cylinder head cooling fins, air intake screen on flywheel end, and carburetor-governor levers and linkage. This will help insure adequate cooling and correct engine speed and will reduce the possibility of overheating and mechanical damage to the engine.

Greasing and Lubrication

Service Interval/Specification

Grease the areas shown at the intervals given in the Where to Add Grease section below. Grease more frequently when operating conditions are extremely dusty or sandy.

Grease with No. 2 general-purpose lithium-base or molybdenum-base grease.

Applying the Grease

1. Disengage the PTO, turn the ignition key to off, and remove the key.
2. Wait for all moving parts to stop before leaving the operating position and then chock or block tires.
3. Clean the grease fittings with a rag and scrape any paint from the front of the fittings.
4. Connect a grease gun to the fitting and pump grease into the fittings until grease begins to ooze out of the bearings.
5. Wipe up any excess grease.

Locating Where to Apply Grease

1. Lubricate the caster wheel bearings and front spindles every 8 operating hours (Fig. 43).

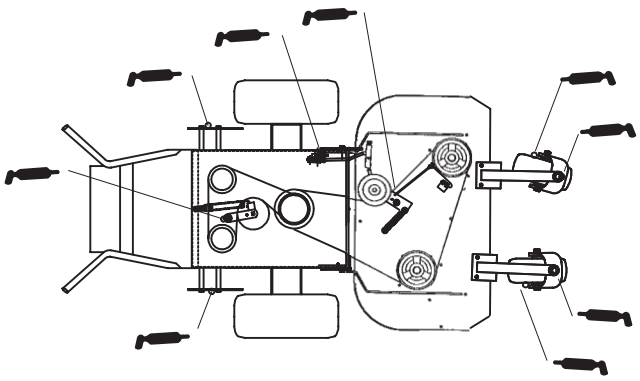

Figure 43

2. Lubricate the mower deck idler pivot, pump drive idler pivot and pump control every 40 operating hours (Fig. 43).

Note: You'll have to remove the carrier covers to access the grease fitting for the deck.

3. Lubricate the PTO engagement bellcrank every 100 operating hours (Fig. 43).

Cleaning the Cooling System

Service Interval/Specification

Before each use, check and clean engine cooling system. Remove any build–up of grass, dirt or other debris from the cylinder and cylinder head cooling fins, air intake screen on flywheel end, and carburetor–governor levers and linkage. This will help ensure adequate cooling and correct engine speed and reduce the possibility of overheating and mechanical damage to the engine.

Draining the Fuel Tank

Danger

In certain conditions, gasoline is extremely flammable and highly explosive. A fire or explosion from gasoline can burn you and others and can damage property.

- **Drain gasoline from the fuel tank when the engine is cold. Do this outdoors in an open area. Wipe up any gasoline that spills.**
- **Never smoke when draining gasoline, and stay away from an open flame or where a spark may ignite the gasoline fumes.**

1. Park the machine on a level surface, to ensure that the fuel tank drains completely.
2. Disengage the PTO, turn the ignition key to off, and remove the key.
3. Wait for all moving parts to stop before leaving the operating position and then chock or block tires.
4. Disconnect the spark plug wire(s) from the spark plug(s).
5. Close the fuel shut-off valve in fuel line (Fig. 44).

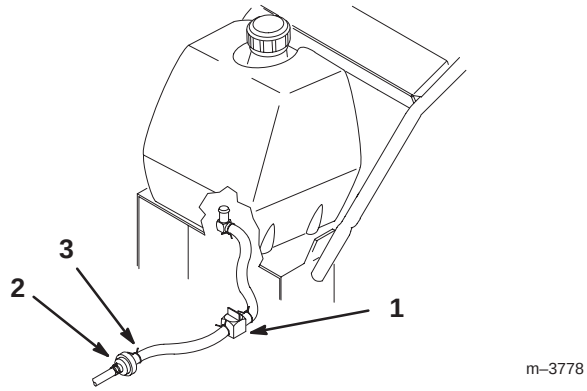

Figure 44

1. Fuel shut-off valve
2. Fuel filter
3. Clamp

6. Squeeze the ends of the hose clamp together, and slide it up the fuel line away from fuel filter (Fig. 44).

7. Pull the fuel line off the fuel filter (Fig. 44).

8. Open the fuel shut-off valve and allow the gasoline to drain into a fuel container or drain pan.

Note: Install a new fuel filter while the fuel tank is empty. Refer to Replacing the Fuel Filter, page 34.

9. Install the fuel line onto the fuel filter, and slide the hose clamp close to the filter to secure the fuel line.

Servicing the Fuel Filter

Service Interval/Specification

Replace the fuel filter after every 200 operating hours or yearly, whichever occurs first.

Replacing the Fuel Filter

Never install a dirty filter if it is removed from the fuel line.

1. Disengage the PTO, turn the ignition key to off, and remove the key.

2. Wait for all moving parts to stop before leaving the operating position and then chock or block tires.

3. Disconnect the spark plug wire(s) from the spark plug(s).

4. Close the fuel shut-off valve (Fig. 44).

5. Squeeze the ends of the hose clamps together and slide them away from the filter (Fig. 44).

6. Remove the filter from the fuel lines.

7. Install a new filter and move the hose clamps close to the filter.

8. Open the fuel shut-off valve at the fuel tank (Fig. 44).

9. Check for fuel leaks and make any needed repairs.

Servicing the Hydraulic System

Replacing the Hydraulic Filter

Change the hydraulic filter:

- After the first 8 operating hours.
- After every 200 operating hours.

1. Disengage the PTO, turn the ignition key to off, and remove the key.

2. Wait for all moving parts to stop before leaving the operating position and then chock or block tires.

Important Do not substitute automotive oil filter or severe hydraulic system damage may result.

3. Remove hydraulic reservoir cap and temporarily cover opening with a plastic bag and rubber band to prevent all hydro fluid from draining out.

4. Locate filter under engine base and place drain pan under filter (Fig. 45).

5. Remove the old filter and wipe the filter adapter gasket surface clean (Fig. 45).

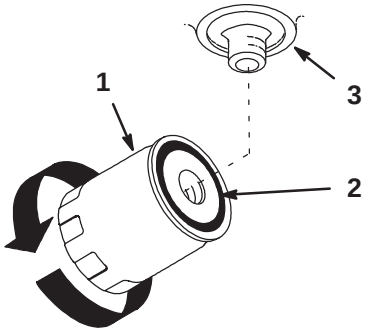

Figure 45

1. Hydraulic filter
2. Gasket
3. Adapter

6. Apply a thin coat hydro fluid to the rubber gasket on the replacement filter.

7. Install replacement hydraulic filter onto the filter adapter. Do not tighten.

8. Remove plastic bag from reservoir opening and allow filter to fill with hydro fluid.

9. When fluid overflows filter turn the oil filter clockwise until the rubber gasket contacts the filter adapter, then tighten the filter an additional 1/2 turn (Fig. 45).

10. Clean up any spilled fluid.

11. If there is no fluid, add Mobil 1 15W-50 synthetic motor oil or equivalent synthetic oil to approximately 1/4 in. (6 mm) below the top of reservoir baffle.

Important Use oil specified or equivalent. Other fluids could cause system damage.

12. Start engine and let run for about two minutes to purge air from the system. Stop the engine and check for leaks. If one or both wheels will not drive, refer Bleeding Hydraulic System, page 35.

13. Recheck level and add fluid, if required. **Do not overfill.**

Bleeding the Hydraulic System

The traction system is self bleeding, however, it may be necessary to bleed the system if fluid is changed or after work is performed on the system.

Air must be purged from the hydraulic system when any hydraulic components, including oil filter, are removed or any of the hydraulic lines are disconnected. The critical area for purging air from the hydraulic system is between the oil reservoir and each charge pump located on the top of each variable displacement pump. Air in other parts of the hydraulic system will be purged through normal operation once the charge pump is ”primed”.

1. Disengage the PTO, turn the ignition key to off, and remove the key. Wait for all moving parts to stop before leaving the operating position.

2. Raise the rear of the machine up onto jack stands high enough to raise the drive wheels off the ground.

3. Check Hydraulic fluid level.

4. Start engine and move throttle control to full throttle position. Move the speed control lever to the middle speed position and place the drive levers into the ”drive” position.

If either drive wheel does not rotate, it is possible to assist the purging of the charge pump by carefully rotating the tire in the forward direction.

Note: It is necessary to lightly touch the charge pump cap (Fig. 46) with your hand to check the pump temperature. If the cap is too hot to touch, turn off engine. The pumps may be damaged if the pump becomes too hot. If either drive wheel still does not rotate continue to next step.

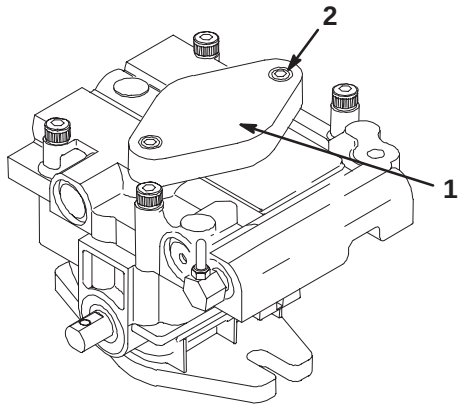

Figure 46

1. Charge pump cap
2. Socket head screw

5. Thoroughly clean the area around each of the charge pump housings.

6. To ”prime” charge pump, loosen two hex socket head capscrews (Fig. 46) 1–1/2 turns only. Make sure engine is not running. Lift charge pump housing upward and wait for a steady flow of oil to flow out from under housing. Retighten capscrews. Do this for both pumps.

Note: Hydraulic reservoir can be pressurized to up to 5 psi to speed this process.

7. If either drive wheel still does not rotate, stop and repeat steps 4 and 5 on the respective pump. If wheels rotate slowly, the system may prime after additional running. Recheck hydraulic fluid level.

8. Allow unit to run several minutes after the charge pumps are ”primed” with drive system in the full speed position.

9. Check hydro control linkage adjustment. Refer to Adjusting Hydro Control Linkages on page 38.

Checking the Hydraulic Lines

After every 100 operating hours, check hydraulic lines and hoses for leaks, loose fittings, kinked lines, loose mounting supports, wear, weather and chemical deterioration. Make necessary repairs before operating.

Note: Keep areas around hydraulic system clean from grass and debris build up.

Warning

Hydraulic fluid escaping under pressure can penetrate skin and cause injury.

- **If hydraulic fluid is injected into the skin it must be surgically removed within a few hours by a doctor familiar with this type of injury. Gangrene may result if this is not done.**
- **Keep body and hands away from pin hole leaks or nozzles that eject high pressure hydraulic fluid.**
- **Use cardboard or paper to find hydraulic leaks.**
- **Safely relieve all pressure in the hydraulic system before performing any work on the hydraulic system.**
- **Make sure all hydraulic fluid hoses and lines are in good condition and all hydraulic connections and fittings are tight before applying pressure to hydraulic system.**

Hydro Linkage Adjustments

Perform the following linkage adjustments when the machine needs maintenance. Perform steps Adjust Speed Control Linkage through Adjust Tracking. If adjustment is needed, do them in the order that they are listed.

Adjust Speed Control Linkage

1. Disengage the PTO, turn the ignition key to off, and remove the key.
2. Wait for all moving parts to stop before leaving the operating position and then chock or block tires.
3. Move the speed control lever (located on the console) to the full forward position.
4. Check the orientation of the tabs on the ends of the speed control crank. These tabs should be pointing straight down at the 6 o'clock position approximately (Fig. 48).
5. Adjust the threaded yoke at the bottom of the speed control linkage until the tabs are at the 6 o'clock position (Fig. 48).

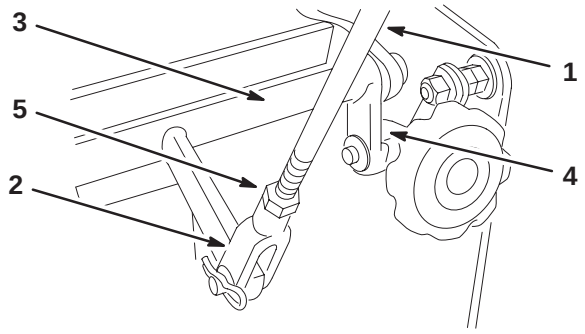

Figure 47

1. Speed control rod
2. Yoke
3. Speed control crank
4. Tabs, 6 o'clock position
5. Jam nut

6. Pull the speed control lever back to neutral.
7. Check to make sure the safety switch is depressed and there is a 5/16 in. (8 mm) space between the actuating tab and the switch. (Fig. 48).
8. If needed, adjust switch location to create the 5/16 in. (8 mm) space (Fig. 48).

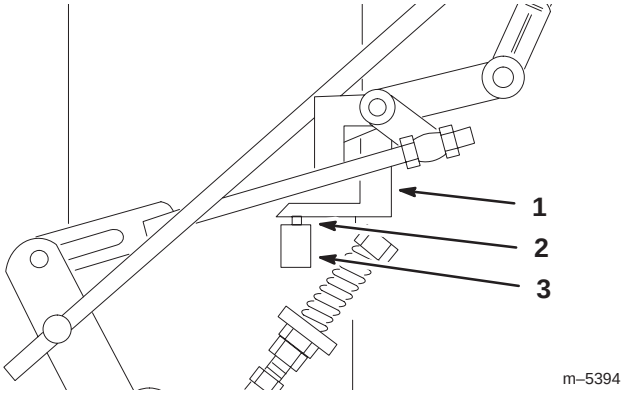

Figure 48

1. Actuating tab
2. 5/16 in. (8 mm) space
3. Safety switch

Adjust Neutral Control Linkages

Warning

Engine must be running so control linkage adjustments can be performed. Contact with moving parts or hot surfaces may cause personal injury.

Keep hands, feet, face, clothing and other body parts away from rotating parts, muffler and other hot surfaces.

Warning

Mechanical or hydraulic jacks may fail to support machine and cause a serious injury.

- **Use jack stand when supporting machine.**
- **Do not use hydraulic jacks.**

1. Disengage the PTO, turn the ignition key to off and remove the key.
2. Wait for all moving parts to stop before leaving the operating position.
3. Raise the rear of the machine onto jack stands to raise the drive wheels off the ground.
4. Start the engine and move the throttle ahead to the full throttle position.
5. Place the neutral locks in the full forward position and move the speed control lever to the medium speed position.
6. Hold OPC levers down.

Note: The OPC levers must be held down whenever the speed control lever is out of the neutral position or the engine will kill.

Warning

Electrical system will not perform proper safety shut off with Operator Presence Control (OPC) levers held in place.

- **Make sure Operator Presence Control (OPC) levers are working when adjustment is completed.**
- **Never operate this unit with Operator Presence Control (OPC) levers held in place.**

7. Squeeze one drive lever until an increased resistance is felt. This is where neutral should be.

Note: Make sure you have not reached the end of the neutral lock slot. If you have, shorten the control lever linkage. Refer to Control Rod Adjustment on page 39.

8. If the wheel turns while holding the drive lever in neutral, the neutral control linkages need to be adjusted (Fig. 49). If wheel stops then go to step 12.
9. Loosen the nut against the neutral control linkage yoke (Fig. 49).
10. Adjust the neutral control linkage until the respective drive wheel stops while the drive lever is pulled against the neutral spring (neutral position) (Fig. 49).
11. Turn the adjusting bolt approximately 1/4 turn clockwise if the wheel is turning in reverse or turn the bolt approximately 1/4 turn counter–clockwise if the wheel is turning forward (Fig. 49).
12. Release the drive lever to the forward drive position and squeeze back into the neutral position. Check to see if the wheel stops. If not, repeat the above adjustment procedure.
13. After adjustments are made, tighten the nuts against the yokes.
14. Repeat this procedure for the opposite side.

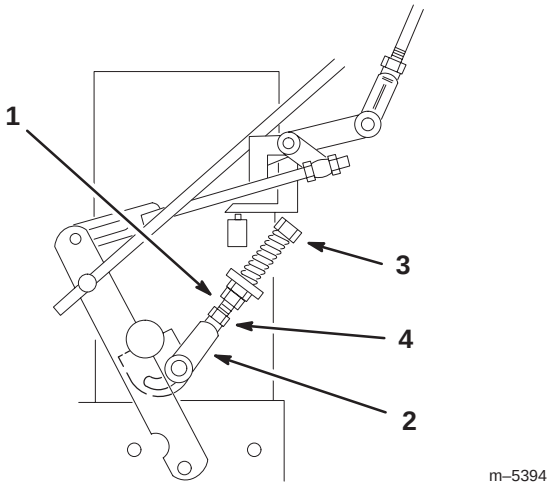

Figure 49

1. Neutral control linkage
2. Yoke
3. Adjusting bolt
4. Nut

Adjust Hydro Control Linkages

Warning

Engine must be running so control linkage adjustments can be performed. Contact with moving parts or hot surfaces may cause personal injury.

Keep hands, feet, face, clothing and other body parts away from rotating parts, muffler and other hot surfaces.

Warning

Mechanical or hydraulic jacks may fail to support machine and cause a serious injury.

- **Use jack stand when supporting machine.**
- **Do not use hydraulic jacks.**

Left Side Linkage Adjustment

1. Disengage the PTO, turn the ignition key to off, and remove the key. Wait for all moving parts to stop before leaving the operating position.
2. Raise the rear of the machine onto jack stands high enough to raise the drive wheels off of the ground.
3. Start the engine and move the throttle ahead to the full throttle position.
4. Place the left drive lever in the full forward position.
5. Place the speed control lever in the neutral position.
6. Hold OPC levers down.

Note: The OPC levers must be held down whenever the speed control lever is out of the neutral position or the engine will kill.

Warning

Electrical system will not perform proper safety shut off with Operator Presence Control (OPC) levers held in place.

- **Make sure Operator Presence Control (OPC) levers are working when adjustment is completed.**
- **Never operate this unit with Operator Presence Control (OPC) levers held in place.**

7. Loosen the front nut on left hydro control linkage as shown in figure 50.
8. Turn the left rear adjusting nut counter–clockwise until wheel rotates forward (Fig. 50).
9. Turn the rear adjusting nut clockwise 1/4 of a turn at a time. Then move the speed control lever forward and back to neutral. Repeat this until left wheel stops rotating forward (Fig. 50).
10. Turn the rear nut an additional 1/2 turn and tighten the front nut.

Note: Make sure flat part of linkage is perpendicular to pin part of swivel.

11. After adjusting the left hydro control linkage, move the speed control lever forward and then back to the neutral position.

12. Make sure the speed control lever is in the neutral position and the tire does not rotate.

13. Repeat adjustment if needed.

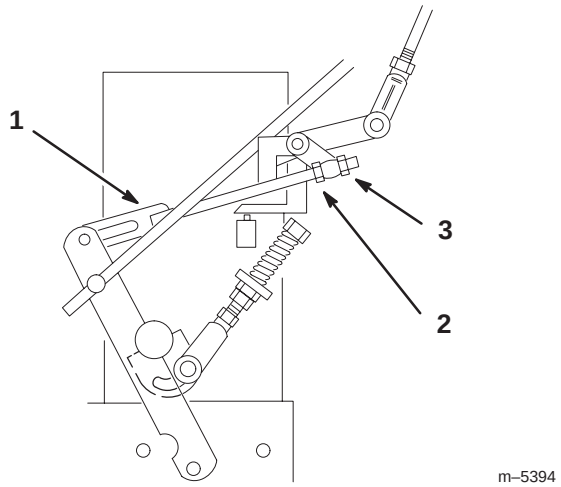

Figure 50

1. Hydro control linkage
2. Front nut
3. Rear adjusting nut

Note: If inconsistent neutral occurs, check to be sure both springs are properly tightened on the speed control lever under the console, especially the rear pivot spring. Repeat above adjustments if necessary (Fig. 51).

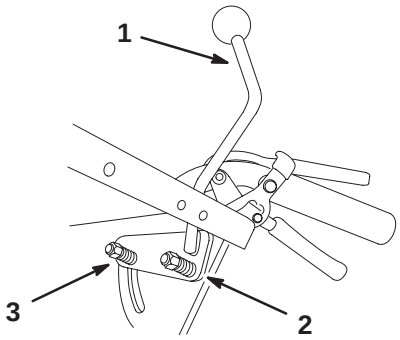

Figure 51

1. Speed control lever
2. Rear pivot spring
3. spring

Right Side Linkage Adjustment

1. Place the speed control lever in the neutral position.

2. Place the right drive lever in the full forward position.

3. Hold OPC levers down.

Note: The OPC levers must be held down whenever the speed control lever is out of the neutral position or the engine will kill.

4. Adjust the right side linkage by turning the quick track knob counterclockwise until the tire begins to rotate forward (Fig. 52).

5. Turn the knob clockwise 1/4 of a turn at a time. Then move the speed control forward and back to neutral. Repeat this until right wheel stops rotating forward (Fig. 52).

6. The spring that keeps tension on the knob should normally not need adjustment. However if adjustment is needed, adjust the length of spring to 1 in. (26 mm) between the washers (Fig. 52).

7. Adjust spring length by turning nut at front of spring (Fig. 52).

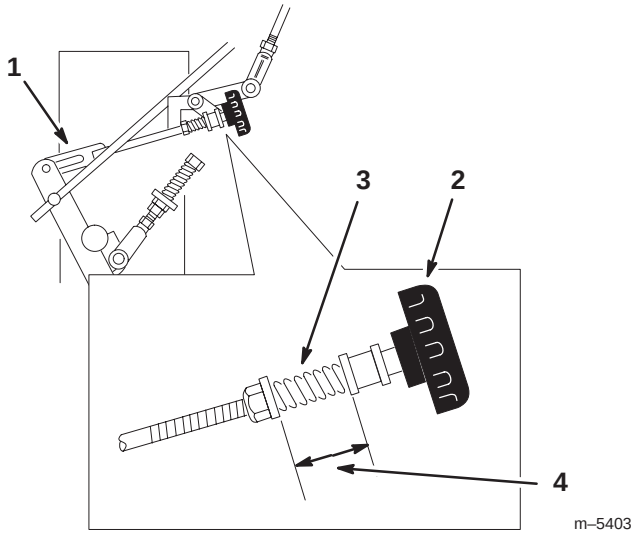

Figure 52

1. Hydro control linkage
2. Quick track knob
3. Spring
4. 1 inch (26 mm)

Control Rod Adjustment

Checking Control Rod

1. With rear of machine still on jack stands and engine running at full throttle, move the speed control lever to the medium speed position.

Note: The OPC levers must be held down whenever the speed control lever is out of the neutral position or the engine will kill.

2. Move the respective drive lever upward until it reaches the neutral position and engage neutral locks.

3. If the tire rotates in either direction, the length of the control rod will need to be adjusted.

Adjusting Control Rods

1. Adjust the rod length by releasing the drive lever and removing clevis pin. Rotate the rod in the rod fitting (Fig. 53).
2. Lengthen the rod if the tire is turning in reverse and shorten the rod if the tire is turning forward.
3. Rotate the rod several turns if the tire is rotating fast. Then, adjust the rod in 1/2 turn increments.
4. Release and engage neutral lock checking that the tire does not rotate. Continue this process until the tire does not rotate.
5. Place the hairpin back into clevis pin (Fig. 53).
6. Repeat this adjustment for opposite side.

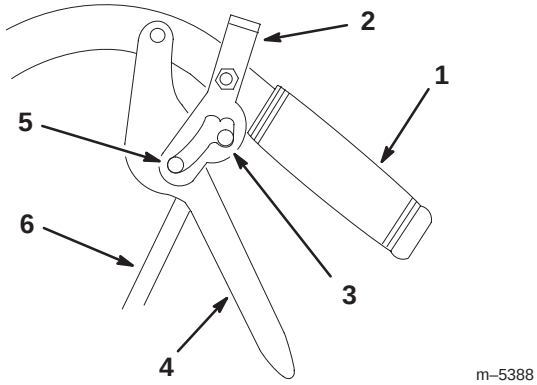

Figure 53

1. Handle
2. Neutral lock
3. Neutral position
4. Drive lever
5. Full speed forward
6. Control rod

Tracking Adjustment

1. Remove machine from any jack stands.
2. Check the rear tire pressure. Refer to Checking the Tire Pressure, page 32.
3. Run the unit and observe the tracking on a level, smooth, hard surface such as concrete or asphalt.
4. If the unit tracks to one side or the other, turn the quick track knob. Turn the knob right to steer right and turn the knob left to steer left (Fig. 54).

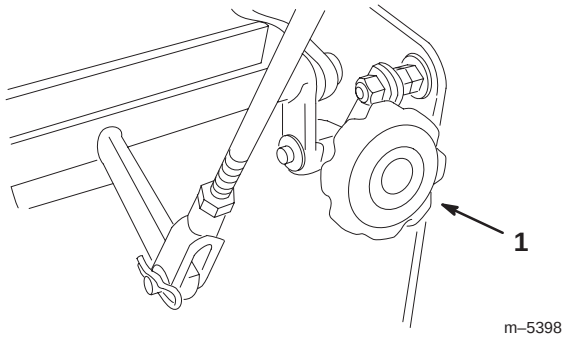

Figure 54

1. Quick track knob

Adjusting Spring Anchor Links

For medium or heavy duty drive conditions, such as operating with a sulky on steep slopes, a higher spring force may be required on the hydro pump control arms to prevent the drive system from stalling.

1. Disengage the PTO, turn the ignition key to off, and remove the key.
2. Wait for all moving parts to stop before leaving the operating position and then chock or block tires.
3. For a heavier drive setting, relocate the spring anchor links to either the **medium** or **heavy duty** positions (Fig. 55). The spring anchor links are attached to the upper rear corner of the hydro drive shields on the left and right sides of the machine.

Note: In the medium or heavy duty positions, the drive lever forces at the upper handle will also be increased

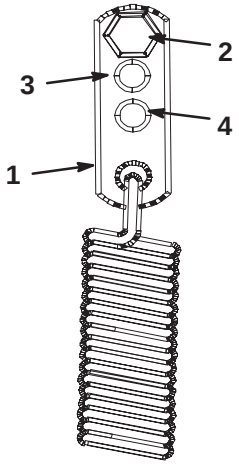

Figure 55

1. Spring anchor
2. Standard setting
3. Medium setting
4. Heavy duty setting

Checking the Belts

Service Interval/Specification

Check all belts after every 50 operating hours or monthly, whichever occurs first. Look for dirt, wear, cracks, and signs of overheating.

Replacing the Mower Belt

1. Disengage the blade control (PTO).
2. Stop the engine and wait for all moving parts to stop before leaving the operating position and then chock or block tires.
3. Remove the knobs and the belt cover on the mower.
4. Remove the idler pulley and the worn belt (Fig. 56).
5. Install the new mower belt.
6. Install the idler pulley.
7. Engage the blade control (PTO) and check the belt tension. Refer to Adjusting the Mower Belt Tension, page 42.

Note: The proper mower belt tension is 10–15 lbf. (44–67 N) with the belt deflected 1/2 in. (13 mm) halfway between the pulleys (Fig. 56).

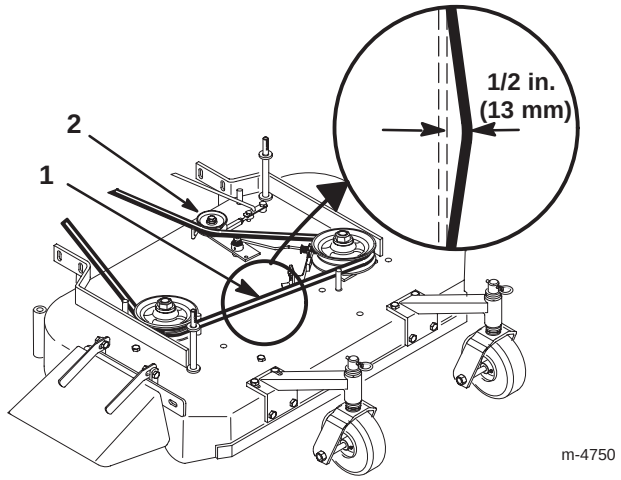

Figure 56

1. Mower belt with 1/2 in. (13mm) deflection
2. Idler pulley

8. Engage the blade control (PTO).
9. Check the clearance between the bell crank and the transmission output shaft (Fig. 57).

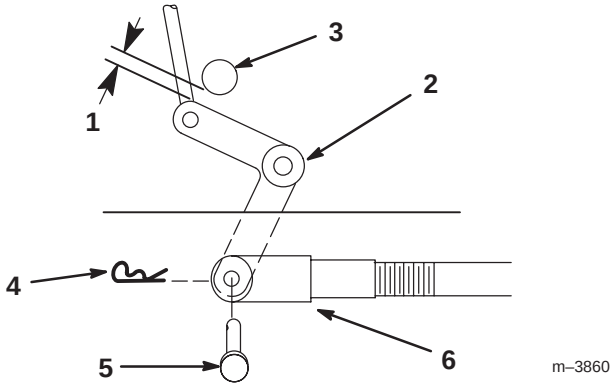

Figure 57

1. 1/16–1/8 in. (2–3 mm)
2. Bell crank
3. Transmission output shaft
4. Hairpin cotter
5. Clevis pin
6. Clevis

Note: The clearance should be 1/16–1/8 in. (2–3 mm).

10. Remove the hairpin cotter and the clevis pin from the bell crank.
11. Rotate the clevis clockwise on the rod to increase the clearance; rotate it counterclockwise to decrease it (Fig. 57).
12. Disengage the blade control (PTO).

Note: If the assist arm does not contact the front stop on the mower deck (Fig. 58), adjust the clevis to bring the bell crank closer to the transmission output shaft (Fig. 57).

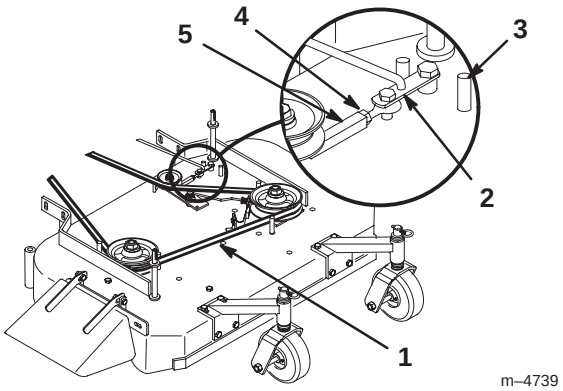

Figure 58

1. 1/2 in. (13 mm) deflection here
2. Assist arm
3. Front stop
4. Locknut
5. Turnbuckle

13. Check the belt guide under the engine frame for the proper adjustment (Fig. 59).

Note: The distance between the belt guide and the mower belt should be 1-1/4 in. (32 mm) when you engage the mower belt (Fig. 59). Adjust the mower belt

as necessary. The disengaged belt should not drag or fall off the pulley when the guides are properly adjusted.

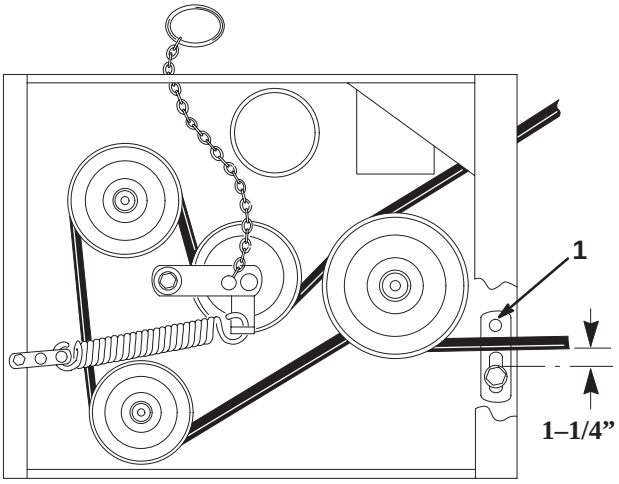

Figure 59

1. Belt guide

Adjusting the Mower Belt Tension

Service Interval/Specification

Check the belt tension after the first 8 operating hours and 25 operating hours thereafter. Check the belt tension after every 50 operating hours.

Important The belt must be tight enough to not slip during heavy loads while cutting grass. Over tensioning the belt will reduce the bearing life of the belt and the spindle.

1. Disengage the blade control (PTO).
2. Stop the engine and wait for all moving parts to stop before leaving the operating position and then chock or block tires.
3. Loosen the locknut on the turnbuckle (Fig. 58).
4. Rotate the turnbuckle toward the rear of the mower to increase the tension on the belt. Rotate the turnbuckle toward the front of the mower to decrease the tension on the belt (Fig. 58).

   Note: The eyebolt threads on both ends of the turnbuckle should be engaged a minimum of 5/16 in. (8 mm).

Adjusting the Blade Brake

1. Disengage the PTO, turn the ignition key to off, and remove the key.
2. Wait for all moving parts to stop before leaving the operating position and then chock or block tires.
3. If necessary, adjust the spring mounting bolts so that the blade brake pad rubs against the pulley edges (Fig. 60).

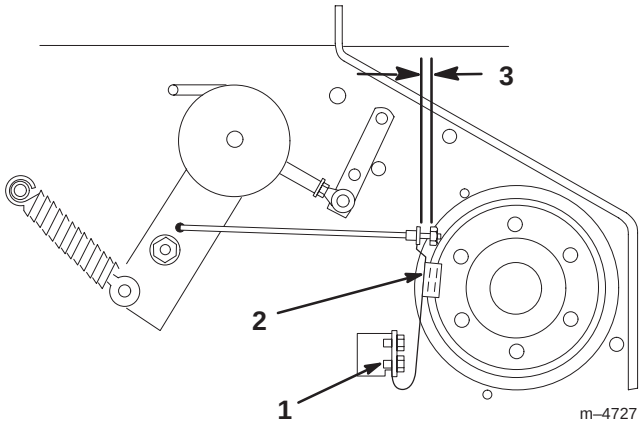

Figure 60

1. Spring mounting bolts
2. Blade brake pad
3. 1/8–3/16 in. (3–5mm)

4. Adjust the nut at the end of the blade brake rod until there is 1/8–3/16 in. (3–5 mm) between the nut and the spacer (Fig. 60).
5. Engage the blades, and ensure that the blade brake pad no longer contacts the pulley edges.

Replacing the Grass Deflector

Warning

An uncovered discharge opening could allow the lawn mower to throw objects in the operator’s or bystander’s direction and result in serious injury. Also, contact with the blade could occur.

Never operate the lawn mower unless you install a cover plate, a mulch plate, or a grass chute and catcher.

1. Disengage the PTO, turn the ignition key to off, and remove the key.
2. Wait for all moving parts to stop before leaving the operating position and then chock or block tires.

3. Remove the locknut, bolt, spring, and spacer that hold the deflector to the mounts (Fig. 61).

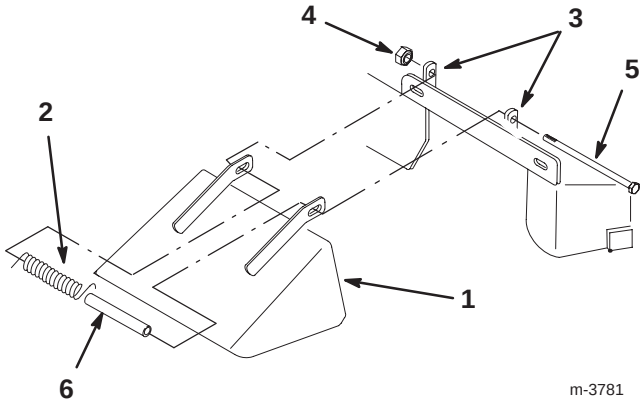

Figure 61

1. Deflector
2. Bolt
3. Deflector mount
4. Spring
5. Spacer
6. Locknut

4. Straighten the deflector mounts if they are bent (Fig. 61).
5. Install a new deflector between the mounts with a spacer and a spring.
6. Hook the front end of the spring around the front deflector mount.
7. Insert the bolt through the spacer and secure it with a locknut.
8. Ensure that there is downward spring force on deflector (Fig. 61).
9. Tighten the bolt and locknut until they lightly contact the pivot brackets (Fig. 61).

Important The grass deflector must be spring-loaded in the down position. Lift the deflector up to check that it snaps to the fully down position.

Wiring Diagram

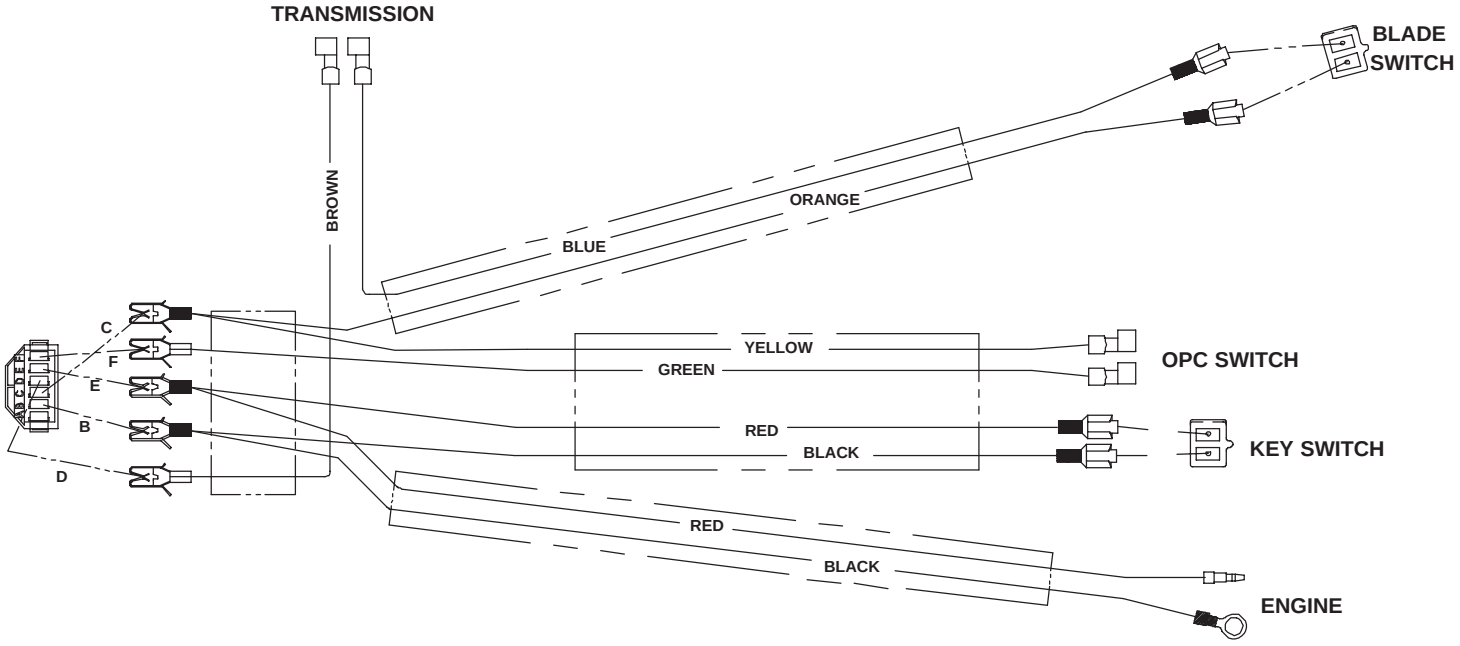

Hydraulic Diagram

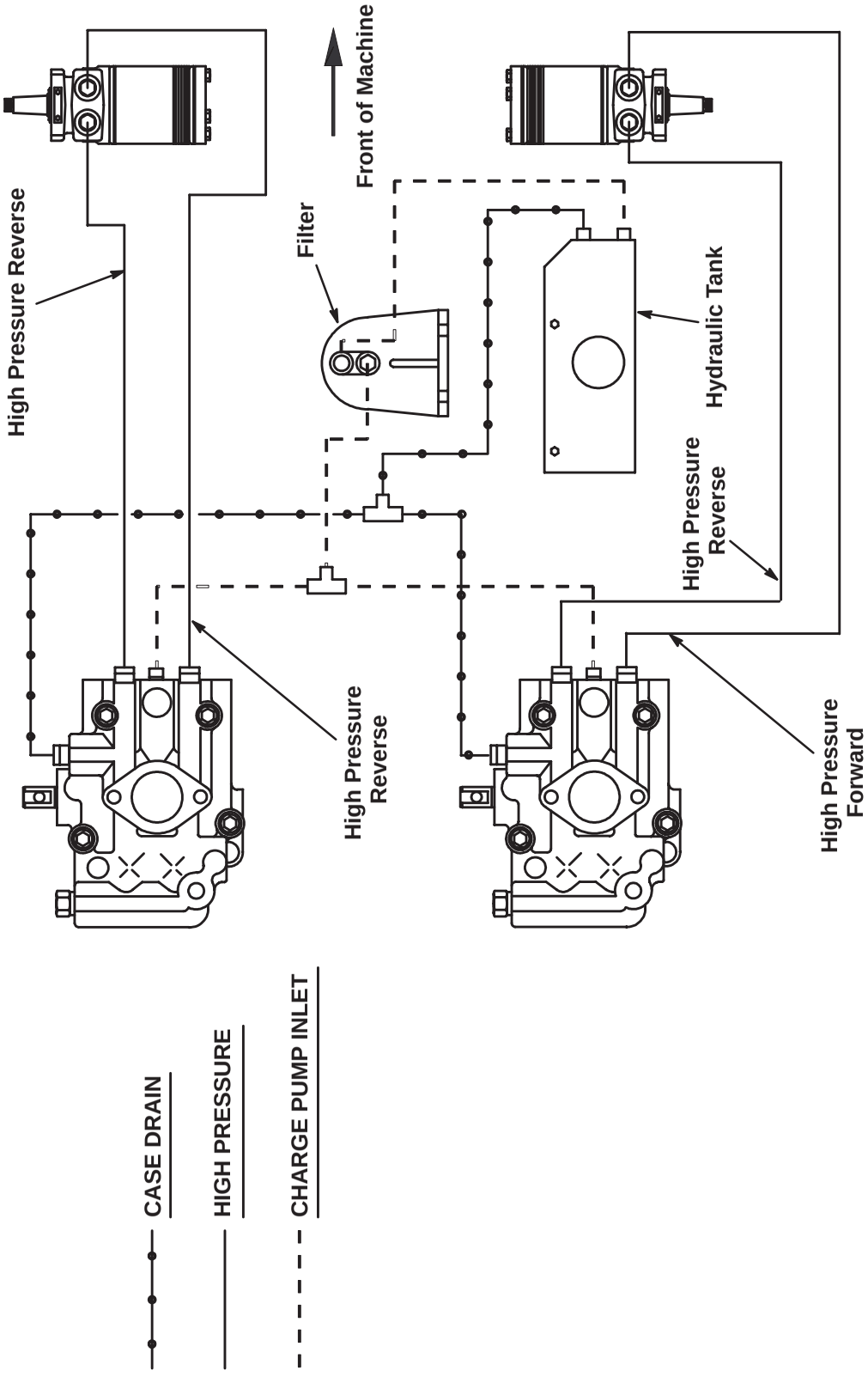

Cleaning and Storage

1. Disengage the power take off (PTO) and turn the ignition key to “OFF” to stop the engine. Remove the key.
2. Remove grass clippings, dirt, and grime from the external parts of the entire machine, especially the engine. Clean dirt and chaff from the outside of the engine’s cylinder head fins and blower housing.

Important You can wash the machine with mild detergent and water. Do not pressure wash the machine. Avoid excessive use of water, especially near the control panel, engine, hydraulic pumps and motors.

3. Service the air cleaner; refer to Servicing the Air Cleaner, page 29.
4. Change the crankcase oil; refer to Servicing the Engine Oil, page 30.
5. Change the hydraulic filter; refer to Servicing the Hydraulic System, page 34.
6. Check the tire pressure; refer to Checking the Tire Pressure, page 32.
7. For storage over 30 days, prepare the traction unit as follows.
   A. Add a petroleum based stabilizer/conditioner to fuel in the tank. Follow mixing instructions from stabilizer manufacturer. **Do not use an alcohol based stabilizer (ethanol or methanol).**

Note: A fuel stabilizer/conditioner is most effective when mixed with fresh gasoline and used at all times.

   B. Run the engine to distribute conditioned fuel through the fuel system (5 minutes).
   C. Stop the engine, allow it to cool and drain the fuel tank; refer to Draining Fuel Tank, page 33.
   D. Restart the engine and run it until it stops.
   E. Choke or prime the engine.
   F. Start and run the engine until it will not start again. Use the primer, if equipped on machine, several times to ensure no fuel remains in primer system.
   G. Dispose of fuel properly. Recycle as per local codes.

Important Do not store stabilizer/conditioned gasoline over 90 days.

8. Remove the spark plug(s) and check its condition; refer to Servicing the Spark Plugs, page 31. With the spark plug(s) removed from the engine, pour two tablespoons of engine oil into the spark plug hole. Now use the starter to crank the engine and distribute the oil inside the cylinder. Install the spark plug(s). Do not install the wire on the spark plug(s).
9. Check and tighten all bolts, nuts, and screws. Repair or replace any part that is damaged or defective.
10. Paint all scratched or bare metal surfaces. Paint is available from your Authorized Service Dealer.
11. Store the machine in a clean, dry garage or storage area. Remove the key from the ignition switch and keep it in a memorable place. Cover the machine to protect it and keep it clean.

Troubleshooting

PROBLEM	POSSIBLE CAUSES	CORRECTIVE ACTION
Engine will not start, starts hard, or fails to keep running.	1. Fuel tank is empty.	1. Fill fuel tank with gasoline.
	2. PTO is on (Pulled up).	2. Turn PTO off (Push in).
	3. Speed control lever is in gear.	3. Move speed control lever to neutral.
	4. Choke is not ON.	4. Move choke lever to ON.
	5. Air cleaner is dirty.	5. Clean or replace air cleaner element.
	6. Spark plug wire is loose or disconnected.	6. Install wire on spark plug.
	7. Spark plug is pitted, fouled, or gap is incorrect.	7. Install new, correctly gapped spark plug.
	8. Dirt in fuel filter.	8. Replace fuel filter.
	9. Dirt, water, or stale fuel is in fuel system.	9. Contact Authorized Service Dealer.
Engine loses power.	1. Engine load is excessive.	1. Reduce ground speed.
	2. Air cleaner is dirty.	2. Clean air cleaner element.
	3. Oil level in crankcase is low.	3. Add oil to crankcase.
	4. Cooling fins and air passages under engine blower housing are plugged.	4. Remove obstruction from cooling fins and air passages.
	5. Spark plug is pitted, fouled, or gap is incorrect.	5. Install new, correctly gapped spark plug.
	6. Vent hole in fuel cap is plugged.	6. Clean or replace the fuel cap.
	7. Dirt in fuel filter.	7. Replace fuel filter.
	8. Dirt, water, or stale fuel is in fuel system.	8. Contact Authorized Service Dealer.
Engine overheats.	1. Engine load is excessive.	1. Reduce ground speed.
	2. Oil level in crankcase is low.	2. Add oil to crankcase.
	3. Cooling fins and air passages under engine blower housing are plugged.	3. Remove obstruction from cooling fins and air passages.
Machine does not drive.	1. Neutral lock is in neutral position.	1. Move neutral lock to forward position.
	2. Hydrostatic fluid level low.	2. Fill hydrostatic fluid tank.
	3. Traction belt is worn, loose or broken.	3. Change Belt.
	4. Traction belt is off pulley.	4. Install Belt.
	5. Cold start kit engaged.	5. Disengage cold start kit.

PROBLEM	POSSIBLE CAUSES	CORRECTIVE ACTION
Machine moves slowly in neutral.	1. Neutral is mis-adjusted. 2. Neutral control spring is broken or missing.	1. Adjust hydro linkages. 2. Replace neutral control spring.
Machine tracks left or right.	1. Tire pressure is not correct. 2. Tracking knob not adjusted correctly.	1. Adjust tire pressure. 2. Adjust tracking knob.
Abnormal vibration.	1. Cutting blade(s) is/are bent or unbalanced. 2. Blade mounting bolt is loose. 3. Engine mounting bolts are loose. 4. Loose engine pulley, idler pulley, or blade pulley. 5. Engine pulley is damaged. 6. Blade spindle bent.	1. Install new cutting blade(s). 2. Tighten blade mounting bolt. 3. Tighten engine mounting bolts. 4. Tighten the appropriate pulley. 5. Contact Authorized Service Dealer. 6. Contact Authorized Service Dealer.
Uneven cutting height.	1. Blade(s) not sharp. 2. Cutting blade(s) is/are bent. 3. Mower is not level. 4. Underside of mower is dirty. 5. Tire pressure is incorrect. 6. Blade spindle bent.	1. Sharpen blade(s). 2. Install new cutting blade(s). 3. Level mower from side-to-side and front-to-rear. 4. Clean the underside of the mower. 5. Adjust tire pressure. 6. Contact Authorized Service Dealer.
Blades do not rotate.	1. PTO Drive belt is worn, loose or broken. 2. PTO Drive belt is off pulley. 3. Deck belt is worn, loose or broken. 4. Deck belt is off pulley.	1. Install new drive belt. 2. Install drive belt and check adjusting shafts and belt guides for correct position. 3. Install new deck belt. 4. Install deck pulley and check the idler pulley, idler arm and spring for correct position and function.

LCE

The Toro Total Coverage Guarantee

A Limited Warranty

Conditions and Products Covered

The Toro Company and its affiliate, Toro Warranty Company, pursuant to an agreement between them, jointly promise to repair the listed Toro Products if defective in materials or workmanship. The following time periods apply from the date of purchase:

Products	Warranty Period
• All Products	1 year
• All Spindles	2 years parts and labor; third year, parts only
• Engines/Hydraulic Systems* on the following: Outfront and Mid-Mount Z's ProLine Mid-Size Mowers Groundsmaster® Riding Mowers Backpack Blowers	2 years
• Deck Shells (36″–72″) on the following: ProLine Mid-Size Mowers Mid-Mount Z's	2 years
• Electric Clutch on 200 Series Mid-Mount Z's	2 years

This warranty includes the cost of parts and labor, but you must pay transportation costs.

This warranty applies to:

- Outfront and Mid-Mount Z's
- ProLine Mid-Size Mowers
- Groundsmaster Riding Mowers
- Turf Maintenance Equipment
- Debris Management Equipment

* Some engines used on Toro LCE Products are warranted by the engine manufacturer.

Instructions for Obtaining Warranty Service

If you think that your Toro Product contains a defect in materials or workmanship, follow this procedure:

1. Contact any Toro Authorized or Master Service Dealer to arrange service at their dealership. To locate a dealer convenient to you, access our website at www.Toro.com. U.S. Customers may also call 800-348-2424.
2. Bring the product and your proof of purchase (sales receipt) to the Service Dealer.

If for any reason you are dissatisfied with the Service Dealer's analysis or with the assistance provided, contact us at:

LCB Customer Service Department
Toro Warranty Company
8111 Lyndale Avenue South
Bloomington, MN 55420-1196
888-577-7466 (U.S. customers)
877-484-9255 (Canada customers)

Owner Responsibilities

You must maintain your Toro Product by following the maintenance procedures described in the operator's manual. Such routine maintenance, whether performed by a dealer or by you, is at your expense.

Items and Conditions Not Covered

There is no other express warranty except for special emission system coverage on some products. This express warranty does not cover the following:

- Cost of regular maintenance service or parts, such as filters, fuel, lubricants, tune-up parts, blade sharpening, brake and clutch adjustments.
- Any product or part which has been altered or misused or required replacement or repair due to normal wear, accidents, or lack of proper maintenance.
- Repairs necessary due to improper fuel, contaminants in the fuel system, or failure to properly prepare the fuel system prior to any period of non-use over three months.
- Pickup and delivery charges.

All repairs covered by this warranty must be performed by an Authorized Toro Service Dealer using Toro approved replacement parts.

General Conditions

Repair by an Authorized Toro Service Dealer is your sole remedy under this warranty.

Neither The Toro Company nor Toro Warranty Company is liable for indirect, incidental or consequential damages in connection with the use of the Toro Products covered by this warranty, including any cost or expense of providing substitute equipment or service during reasonable periods of malfunction or non-use pending completion of repairs under this warranty.

Some states do not allow exclusions of incidental or consequential damages, or limitations on how long an implied warranty lasts, so the above exclusions and limitations may not apply to you.

All implied warranties of merchantability (that the product is fit for ordinary use) and fitness for use (that the product is fit for a particular purpose) are limited to the duration of the express warranty.

This warranty gives you specific legal rights, and you may also have other rights which vary from state to state.

Countries Other than the United States or Canada

Customers who have purchased Toro products exported from the United States or Canada should contact their Toro Distributor (Dealer) to obtain guarantee policies for your country, province, or state. If for any reason you are dissatisfied with your Distributor's service or have difficulty obtaining guarantee information, contact the Toro importer. If all other remedies fail, you may contact us at Toro Warranty Company.

Part No. 374-0037 Rev. C