Form No. 3327–581

TORO®

Quiet Collector

Wheel Horse® 260 Series Yard Tractor

Model No. 78200—220000001 and Up

Parts Catalog

PROTOTYPE

Ordering Replacement Parts

To order replacement parts, please supply: the part number, the quantity, and the description of each part desired.

Understanding Reference Numbers

Each identified part in an illustration has a reference number. The reference number for a part also appears in the parts list, along with other information about the part.

This catalog uses two special reference number formats, one to indicate parts in a service assembly and another to indicate the quantity of a given part in an illustration.

Service Assembly Reference Numbers

Parts in service assemblies have reference numbers in the form **a:b.** The **a** represents the reference number of the entire service assembly and the **b** represents a sequential number unique to each part within the service assembly.

For example, a wheel assembly might be identified by reference number **6**, the tire by **6:1**, the valve by **6:2**, and the wheel by **6:3**. When you order the assembly identified by reference number 6, you receive all parts identified by reference numbers 6:1, 6:2, and 6:3. However, you may also order any part individually.

Reference numbers of this type appear in illustrations and in part lists.

Reference Numbers Indicating Quantity

In an illustration, if a reference number indicates more than one part, the reference number has the form **nX y.** The **n** represents the quantity of the part, the **X** is the multiplication symbol, and the **y** represents the reference number.

For example, in an illustration, the reference number **2X 37** means that two of the parts identified by reference number 37 are indicated.

© The TORO Company — 2002
All Rights Reserved

Contents

Description	Page
Hopper Back Assembly	3
Front Hopper Assembly	4
Frame and Bottom Hopper Assembly	5
Scroll Assembly	6
Baffle and Tube Assembly	7
Hitch and Pulley Assembly	8

Part Description Abbreviations

Part descriptions in this catalog may include the following abbreviations.

Abbreviation	Meaning
AR	as required
ASM	assembly
CARR	carriage
DEG	degrees
FH	flat head
GA	gauge
HF	hex flange
HH	hex head
HHF	hex head flange
HLH	hex lag head
HJ	hex jam
HOC	height-of-cut
HS	hex socket
HSBH	hex socket button head
HSFH	hex socket flat head
HSH	hex socket head
HWH	hex washer head
HWHTF	hex washer head thread forming
HYD	hydraulic
INC	incorporated
LH	left hand
NI	nylon insert
PPH	Phillips pan head
PTH	Phillips truss head
PTO	power take off
RH	right hand
SFH	slotted fillister head
SHH	slotted hex head
SQH	square head
SHWH	slotted hex washer head
SPH	slotted pan head
SRH	slotted round head
STD	standard
TAP	self tapping
TTH	Torx truss head
WH	wing head

PROTOTYPE

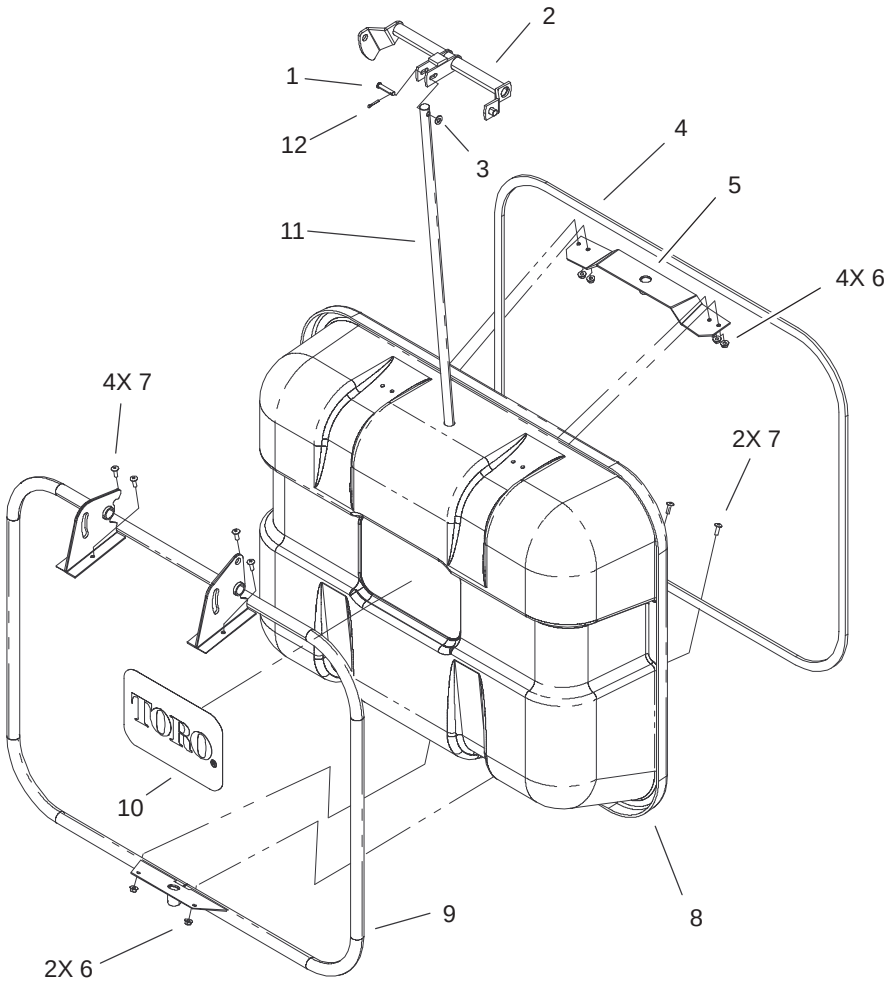

Sheet No.:2

Hopper Back Assembly

Ref. No.	Part No.	Qty.	Description
1	98–3637	1	Pin
2	98–3657	1	Lever
3	3256–23	1	Washer–Flat
4	98–3645	1	Seal–Stripping
5	98–9172	1	Bracket–Guide
6	32128–33	6	Nut–HF
7	9114604	6	Screw–Head, Truss
8	98–9170	1	Hopper–Back
9	98–9171	1	Frame
10	67–7310	1	Decal–Toro
11	98–9173	1	Rod–Locking
12	3272–10	1	Pin–Cotter

Ref. No.	Part No.	Qty.	Description

PROTOTYPE

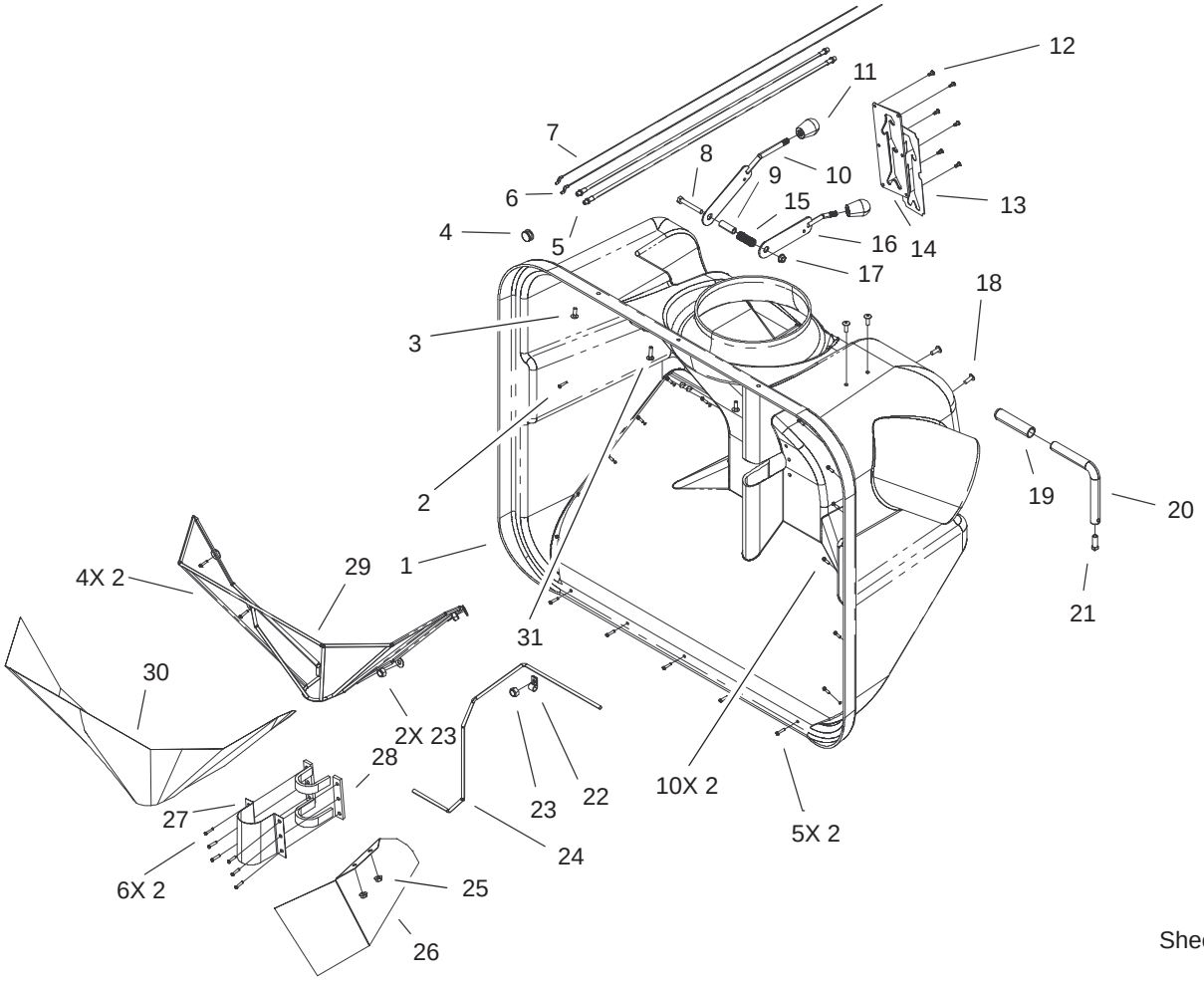

Sheet No.:3

Front Hopper Assembly

Ref. No.	Part No.	Qty.	Description
1	98–3601	1	Hopper–Front
2	32144–23	26	Screw–HWH, Thrd Form
3	3229–1	2	Screw–CARR
4	98–3650	1	Cap–Rubber
5	98–3618	2	Shield–Cable
6	98–3620	1	Cable
7	98–9182	1	Cable–Control
8	322–11	1	Screw–HH
9	98–3648	1	Sleeve
10	98–9177	1	Lever–Clutch
11	98–3672	3	Knob–Oval
12	92–9665	6	Screw
13	106–2654	1	Decal–Operation, 78200
14	106–3460	1	Plate–Lever
15	98–3647	1	Spring
16	98–9176	1	Lever–Air Control
17	32128–20	1	Nut–HF
18	9114604	4	Screw–Head, Truss
19	98–3662	1	Grip–Handle
20	98–9185	1	Arm–Fill Gauge
21	3243–5	1	Screw–Set
22	98–9144	1	Clip–Cable, Nylon
23	3296–8	3	Nut–Lock, NI
24	98–9190	1	Rod–Fill Gauge

Ref. No.	Part No.	Qty.	Description
25	32128–33	2	Nut–HF
26	98–9186	1	Baffle–Grass
27	98–9164	1	Cover–Bearing
28	98–9151	1	Seal–Stripping
29	98–9178	1	Frame–Filter
30	98–9181	1	Filter
31	3329–2	1	Screw–CARR

PROTOTYPE

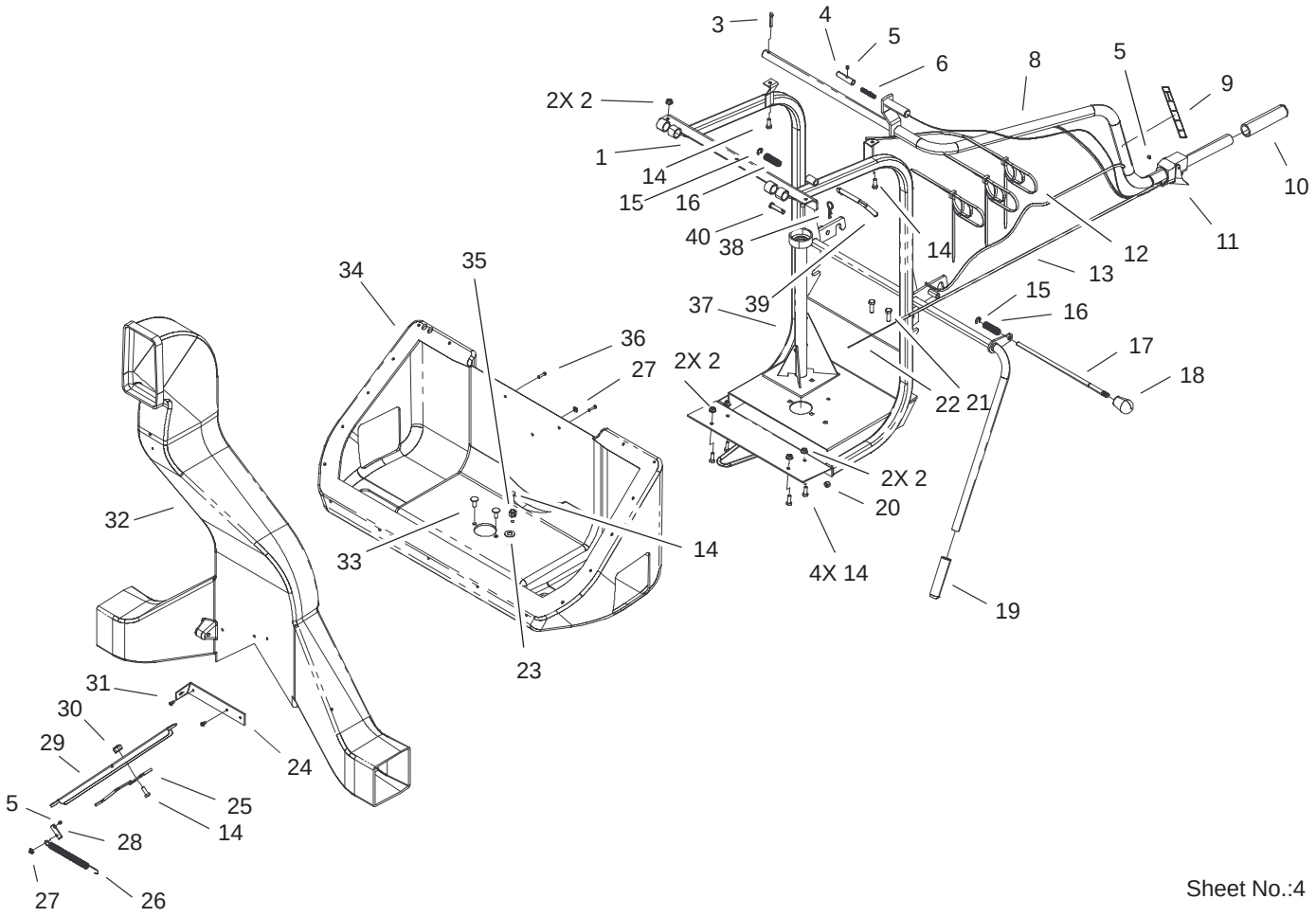

Sheet No.:4

Frame and Bottom Hopper Assembly

Ref. No.	Part No.	Qty.	Description
1	98–3651	1	Frame
2	32128–33	6	Nut–HF
3	3272–21	1	Pin–Cotter
4	98–3665	1	Pin–Lock
5	3245–1	3	Screw–Set, HSH
6	98–3627	1	Spring
8	98–3646	1	Arm – Dump
9	98–3679	1	Label–Dump Arm Operation
10	98–3669	1	Grip–Handle
11	98–3622	1	Lever – Control
12	3290–378	3	Tie–Cable
13	98–3619	1	Shield–Cable
14	321–4	8	Screw–HH
15	98–3659	2	Ring–Retainer
16	98–3640	2	Spring
17	98–3668	1	Pin–Hitch
18	98–3672	1	Knob–Oval
19	98–3662	1	Grip–Handle
20	3296–42	1	Nut–Lock, NI
21	322–5	2	Screw–HH
22	98–3621	1	Cable
23	3256–25	1	Washer–Flat
24	98–3694	1	Bracket–Reinforcing
25	98–3644	1	Lever–Door
26	98–3642	1	Spring

Ref. No.	Part No.	Qty.	Description
27	98–3652	2	Washer–Cap
28	98–3681	1	End–Cable
29	98–9175	1	Door–Air
30	3296–19	1	Nut–Lock NI
31	92–9665	2	Screw
32	98–3605	1	Dock–Air
33	3230–23	2	Screw–CARR
34	98–3602	1	Hopper–Bottom
35	3296–39	1	Nut–Lock, NI
36	32144–23	2	Screw–HWH, Thrd Form
37	98–9139	1	Support–Shaft
38	98–3696	1	Hairpin
39	98–3613	1	Hook
40	98–3695	1	Pin–Hitch

PROTOTYPE

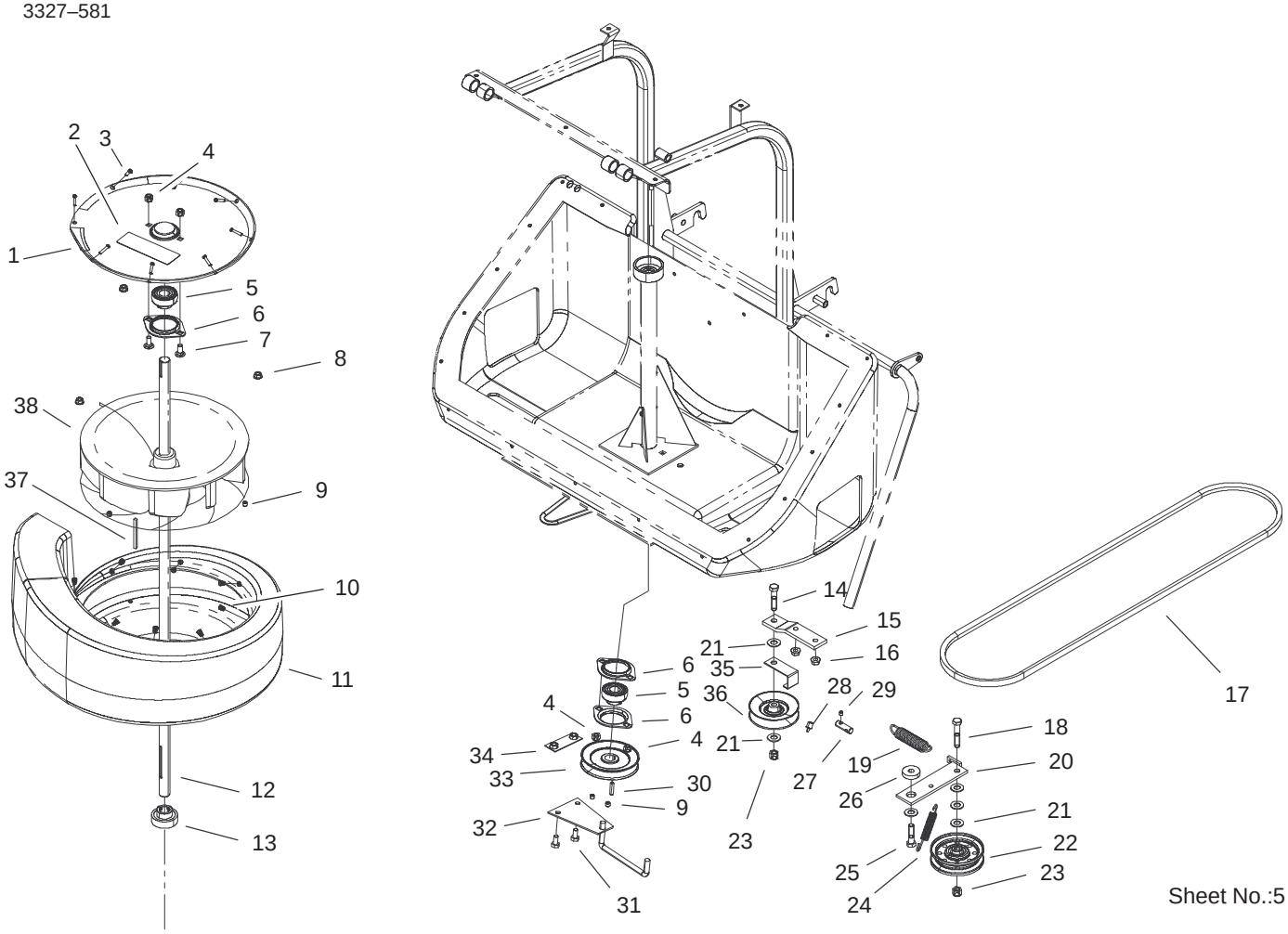

Scroll Assembly

Ref. No.	Part No.	Qty.	Description
1	98–3604	1	Cover–Scroll
2	106–4156	1	Decal–Hazard, Add Weight
3	3250–17	8	Screw–PPH
4	3296–29	4	Nut–Lock, NI
5	98–3690	2	Bearing
6	98–3691	3	Flange
7	3230–1	2	Bolt–CARR
8	32128–33	2	Nut–HF
9	3246–2	2	Setscrew–HSH
10	98–9145	8	Nut–Insert
11	98–9146	1	Scroll
12	98–9141	1	Shaft
13	98–9150	1	Bearing
14	323–9	1	Screw–HH
15	106–3450	1	Bracket
16	32128–20	2	Nut–HF
17	106–3453	1	Belt–V
18	323–10	1	Screw–HH
19	98–9195	1	Spring–Extension
20	98–9196	1	Arm–Idler
21	3256–25	6	Washer–Flat
22	98–9135	1	Idler–Flat
23	3296–39	2	Nut–Lock, NI
24	98–9197	1	Spring–Extension
25	323–8	1	Screw–HH

Ref. No.	Part No.	Qty.	Description
26	98–3632	1	Washer–Flange
27	98–3681	1	End–Cable
28	98–9194	1	Grommet–Cable
29	3245–1	1	Screw–Set, HSH
30	98–3692	1	Key
31	322–2	2	Screw–HH
32	106–3452	1	Guide–Belt
33	98–3623	1	Pulley–V
34	106–3451	1	Plate–Mounting
35	98–9199	1	Guide–Belt
36	98–9198	1	Pulley–V
37	98–3628	1	Key
38	98–9140	1	Fan

PROTOTYPE

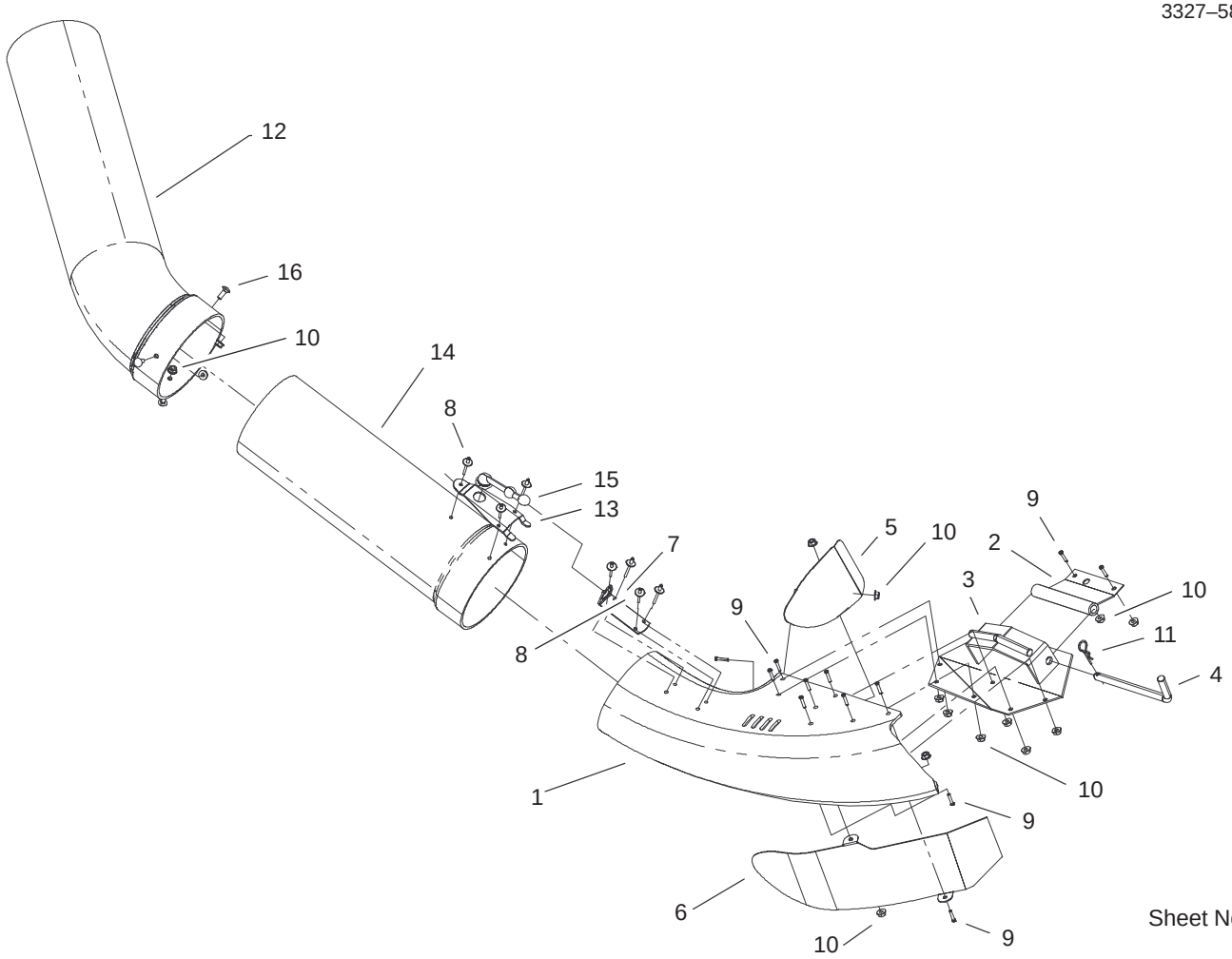

Sheet No.:6

Baffle and Tube Assembly

Ref. No.	Part No.	Qty.	Description
1	98–9131	1	Boot
2	98–9163	1	Bracket–Deck
3	98–9138	1	Bracket–Boot
4	98–9126	1	Pin–Boot
5	98–9127	1	Baffle
6	98–9132	1	Baffle
7	98–3676	1	Bracket–Latch
8	3269–21	7	Rivet–Pop
9	32122–42	12	Screw
10	32128–33	15	Nut–HF
11	98–3696	1	Hairpin
12	106–3456	1	Tube–Elbow
13	98–3675	1	Bracket
14	106–3457	1	Tube–Straight
15	98–3693	1	Latch–Rubber
16	3229–1	3	Screw–CARR

Ref. No.	Part No.	Qty.	Description

PROTOTYPE

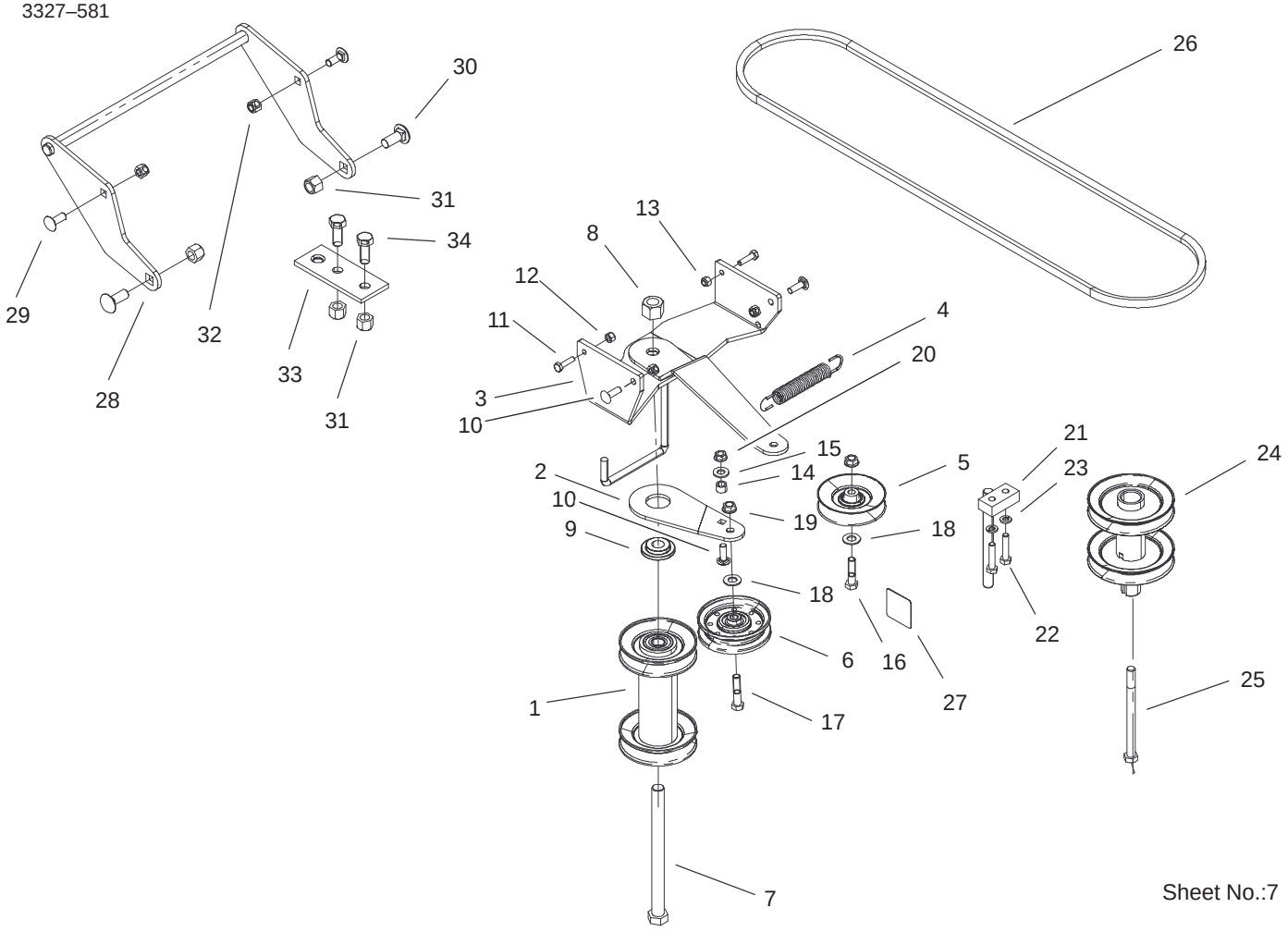

Sheet No.:7

Hitch and Pulley Assembly

Ref. No.	Part No.	Qty.	Description
1	98–9179	1	Pulley–Double
2	98–9189	1	Arm–Idler
3	98–9191	1	Frame–Drive
4	98–3636	1	Spring
5	98–9198	1	Pulley–V
6	98–9135	1	Idler–Flat
7	327–27	1	Screw–HH
8	3296–53	1	Nut–Lock, NI
9	98–9161	1	Washer–Flange
10	3230–22	3	Screw–CARR
11	321–6	2	Screw–HH
12	3296–29	2	Nut–Lock, NI
13	3296–42	2	Nut–Lock, NI
14	98–9162	1	Sleeve
15	3256–24	1	Washer–Flat
16	323–8	1	Screw–HH
17	323–9	1	Screw–HH
18	3256–25	2	Washer–Flat
19	3290–357	2	Nut–HHF
20	32128–20	1	Nut–HF
21	98–9192	1	Shim
22	322–7	2	Screw–HH
23	3253–4	2	Washer–Lock
24	98–9183	1	Pulley–Engine
25	3212–26	1	Screw–HH
26	98–9193	1	Belt–V

Ref. No.	Part No.	Qty.	Description
27	106–2655	1	Decal–Hazard, Pinched Finger
28	98–9188	1	Hitch–Quick,Tractor
29	3231–2	2	Screw–CARR
30	3233–1	2	Screw–CARR
31	3296–23	4	Nut–Lock, NI
32	3296–39	2	Nut–Lock, NI
33	98–9187	1	Plate–Hitch
34	325–5	2	Screw–HH

PROTOTYPE

Maintenance Record

Date								

Maintenance Record

Date								

PROTOTYPE

Maintenance Record

Date								

PROTOTYPE



PROTOTYPE