Form No. 3458-492 Rev A

Hand Spray Wand Kit

2015 and After Multi Pro® 1750, Multi Pro® WM or Multi Pro® 5800 Turf Sprayer

Model No. 41118—Serial No. 316000001 and Up

Operator's Manual

The hand spray wand kit is an attachment for a turf spray application vehicle and is intended to be used by professional, hired operators in commercial applications. It is primarily designed for spraying on well-maintained lawns in parks, golf courses, sports fields, and on commercial grounds.

You may contact Toro directly at www.Toro.com for product safety and operation training materials, accessory information, help finding a dealer, or to register your product.

Setup

Loose Parts

Use the chart below to verify that all parts have been shipped.

Procedure	Description	Qty.	Use
1	No parts required	–	Prepare the machine.
2	Hose hook	1	Install the hose hook and spray-gun bracket.
	Flanged locknut (3/8 inch)	4	
	Flanged locknut (5/16 inch)	4	
	Carriage bolt (3/8 x 3/4 inch)	4	
	Carriage bolt (5/16 x 1 inch)	4	
	R-clamp	2	
	Spray-gun bracket	1	
3	Female cap	1	Install the shutoff valve (Multi Pro 1750 and Multi Pro WM only).
	Shutoff valve	1	
4	Spray-gun valve	1	Install the control valve.
	Hose	1	
	Hose clamp	1	
	Flange clamp	1	
	Gasket	1	
	Fitting (90-degree)	1	
	Hose clamp	1	
	Valve mount (Multi Pro 5800—2016 and After)	1	
	T-fitting (Multi Pro 5800—2016 and After)	1	
	Flat washer (Multi Pro 5800—2016 and After)	4	
	Bolt (6 x 12 mm) (Multi Pro 5800—2016 and After)	4	
	Flange head bolt (6 x 16 mm) (Multi Pro 5800—2016 and After)	4	
	Flange nut (6 mm) (Multi Pro 5800—2016 and After)	4	

© 2022—The Toro® Company
8111 Lyndale Avenue South
Bloomington, MN 55420

Register at www.Toro.com.

Original Instructions (EN)
Printed in the USA
All Rights Reserved

3458-492

Procedure	Description	Qty.	Use
5	Spray gun assembly Straight barbed fitting Hose clamp	1 1 1	Connect the spray hose.

1

Preparing the Machine

No Parts Required

Procedure

1. Ensure that the machine is empty of all fluids. If chemicals have been used in the machine, flush the system thoroughly with clean water and drain the water; refer to your vehicle *Operator's Manual* for instructions.
2. Disconnect the negative battery terminal from the battery.

2

Installing the Hose Hook and Spray-Gun Bracket

Parts needed for this procedure:

1	Hose hook
4	Flanged locknut (3/8 inch)
4	Flanged locknut (5/16 inch)
4	Carriage bolt (3/8 x 3/4 inch)
4	Carriage bolt (5/16 x 1 inch)
2	R-clamp
1	Spray-gun bracket

Procedure

1. Loosen the tank strap.
   - For the Multi Pro 1750 and Multi Pro 5800, loosen the front, right strap (Figure 1).

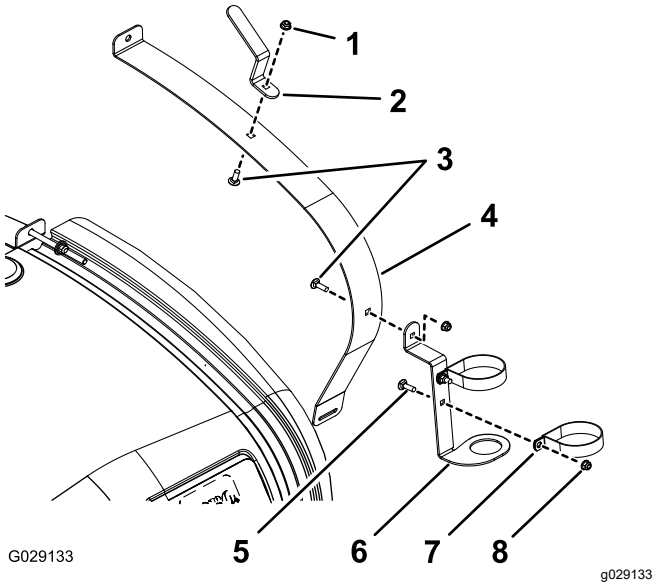

Figure 1

Multi Pro 1750 and Multi Pro 5800

1. Flanged locknut (Multi Pro 1750—3/8 inch; Multi Pro 5800—5/16 inch)
2. Hose hook
3. Carriage bolt (Multi Pro 1750—3/8 x 3/4 inch; Multi Pro 5800—5/16 x 1 inch)
4. Front, right tank strap
5. Carriage bolt (5/16 x 3/4 inch)
6. Spray-gun bracket
7. R-clamp
8. Flanged locknut (5/16 inch)

   - For the Multi Pro WM, loosen the rear, right strap (Figure 2).

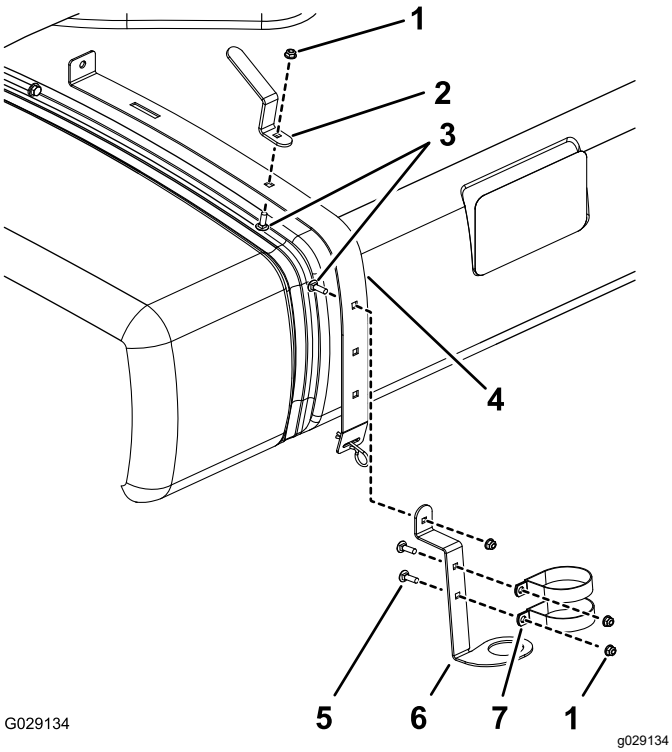

Figure 2
Multi Pro WM

1. Flanged locknut (5/16 inch)
2. Hose hook
3. Carriage bolt (3/8 x 3/4 inch)
4. Rear, right tank strap
5. Carriage bolt (5/16 x 3/4 inch)
6. Spray-gun bracket
7. R-clamp

2. Install the R-Clamps, spray-gun bracket, and hose hook as shown in Figure 1 or Figure 2 using a carriage bolt, flat washer, and flange-head nut.

3

Installing the Shutoff Valve (Multi Pro 1750 and Multi Pro WM Only)

Parts needed for this procedure:

1	Female cap
1	Shutoff valve

Procedure

1. Remove the retainer that secures the a actuator to the manifold valve for the section valve or agitation valve (Figure 3).

   Note: Squeeze the 2 legs of the retainer together while pushing it down.

   Note: Retain the actuator and retainer.

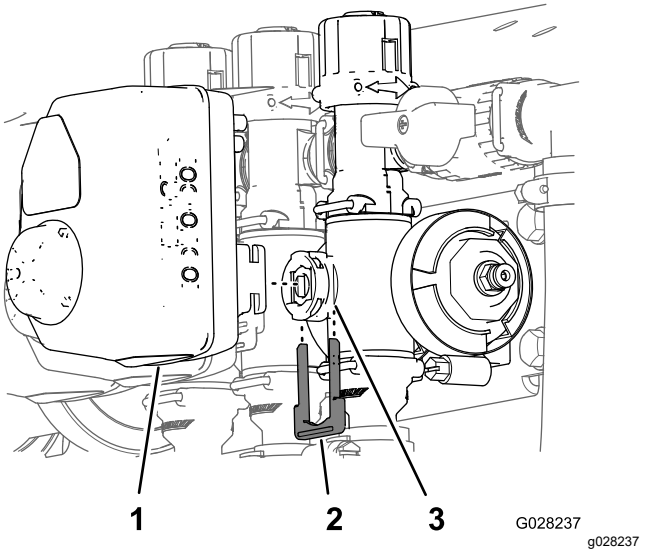

Figure 3

1. Actuator
2. Retainer
3. Stem port

2. Remove the actuator from the manifold valve.
3. Remove the retainers holding the bypass adjustment assembly, end cap, and the fitting and hose assembly as shown in Figure 4.

   Note: You will not use the end cap, but keep the O-ring on the cap.

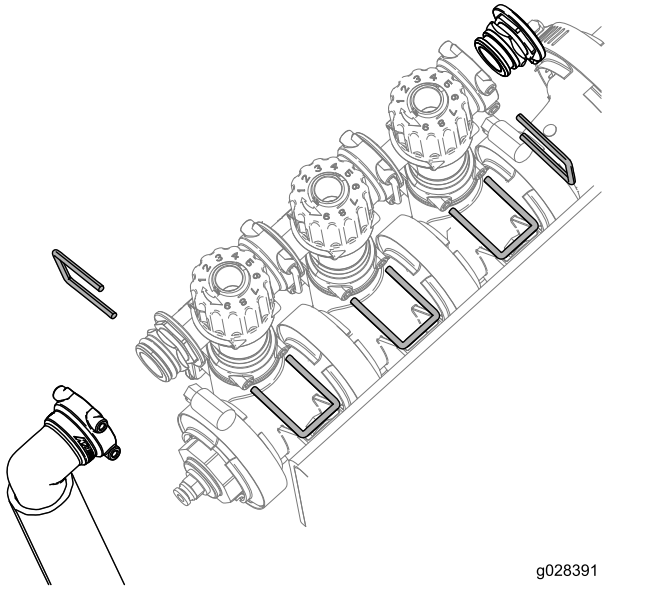

g028391

Figure 4

4. Rotate the bypass adjustment assembly 180 degrees as shown in Figure 5.

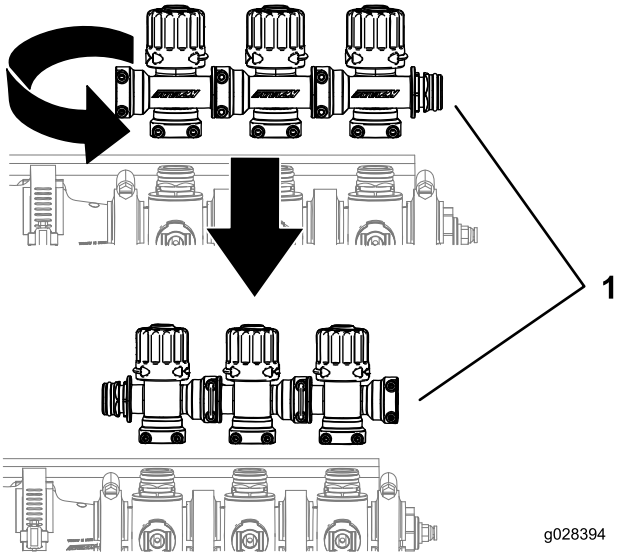

g028394

Figure 5

1. Boom-valve cluster

5. Install the bypass-adjustment assembly, female cap, O-rings, shutoff valve, and fitting and hose assembly using the retainers previously removed as shown in Figure 6.

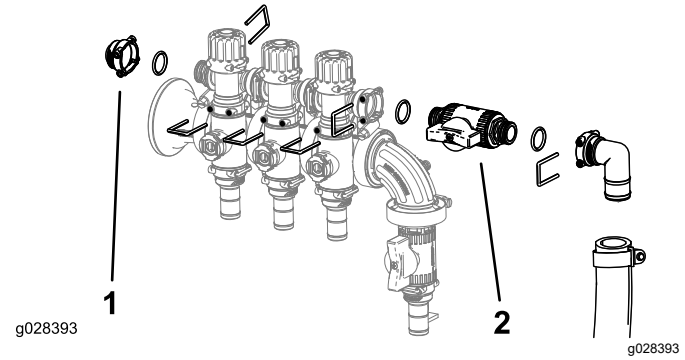

Figure 6

1. Female cap
2. Shutoff valve

4

Installing the Control Valve for the Spray-Gun

Parts needed for this procedure:

1	Spray-gun valve
1	Hose
1	Hose clamp
1	Flange clamp
1	Gasket
1	Fitting (90-degree)
1	Hose clamp
1	Valve mount (Multi Pro 5800—2016 and After)
1	T-fitting (Multi Pro 5800—2016 and After)
4	Flat washer (Multi Pro 5800—2016 and After)
4	Bolt (6 x 12 mm) (Multi Pro 5800—2016 and After)
4	Flange head bolt (6 x 16 mm) (Multi Pro 5800—2016 and After)
4	Flange nut (6 mm) (Multi Pro 5800—2016 and After)

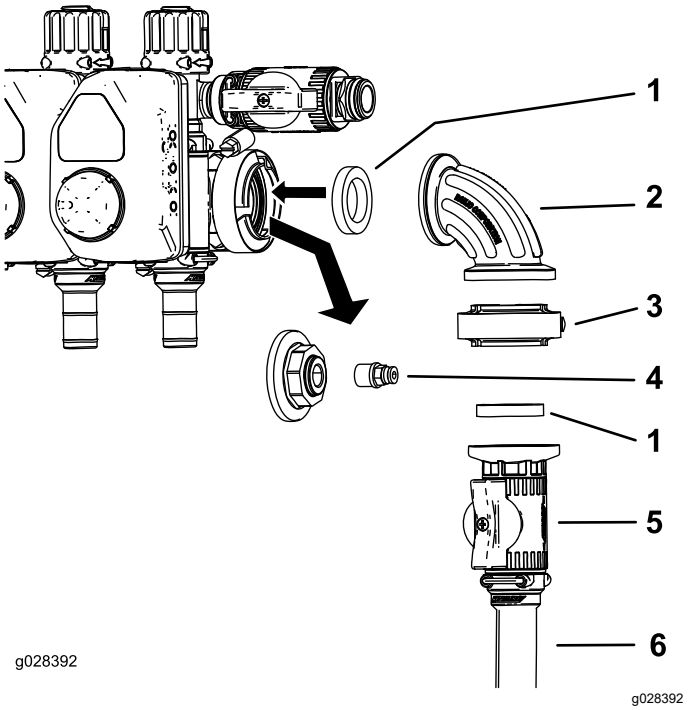

g028392

Figure 7

Multi Pro 1750 and Multi Pro WM

1. Gasket
2. 90-degree fitting
3. Gasket clamp
4. Coupler
5. Control valve
6. Hose-reel supply hose

Assembling the Control Valve (Multi Pro 1750—2015 and After, Multi Pro WM—2015 and After, and Multi Pro 5800—2015)

1. Remove the flange clamp that secures the end cap and coupler at the pressure-gauge port (Figure 7 or Figure 8).

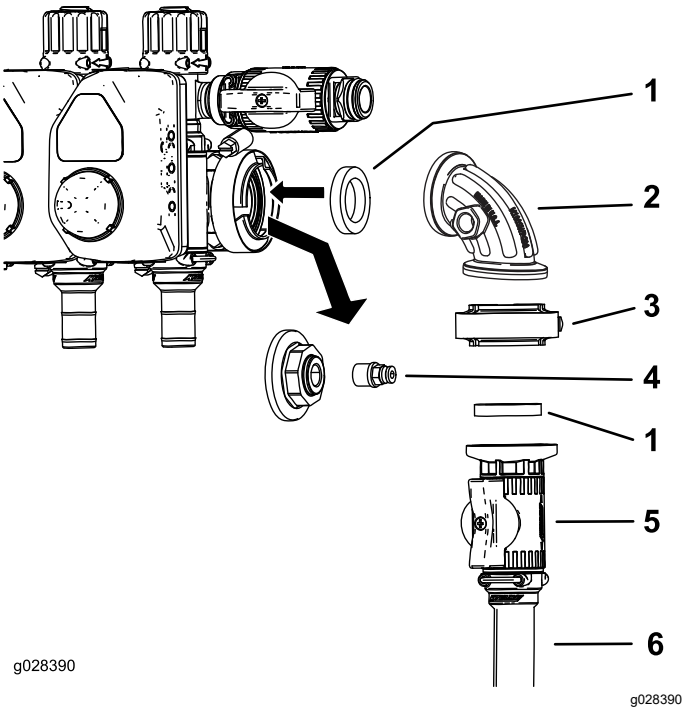

Figure 8

Multi Pro 5800 2015 and Before

1. Gasket
2. 90-degree fitting
3. Flange clamp
4. Coupler
5. Control valve
6. Hose-reel supply hose

2. Remove the coupler from the end cap (Figure 7 and Figure 8).
3. Install the control valve assembly as shown in Figure 7 or Figure 8.
4. Install the coupler into the open port on the 90-degree fitting (Figure 7 or Figure 8).

   Note: The port in the side of the 90-degree fitting for the Multi Pro 1750 and Multi Pro WM is at the forward side (not shown) of the fitting in Figure 7.
5. Connect the hose-reel supply hose to the control valve using a hose clamp (Figure 7 or Figure 8).

Removing the Control Valve from the Machine (Multi Pro 5800—2016 and After)

1. Disconnect the 3-socket connector for the pressure transducer (Figure 9).

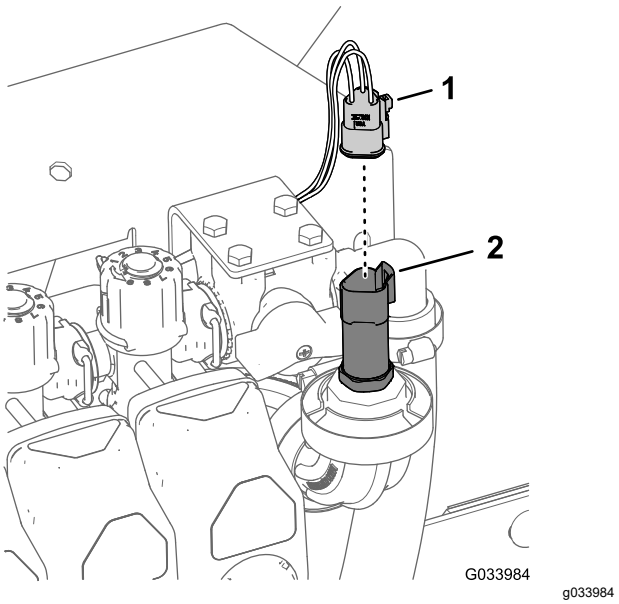

Figure 9

1. 3-socket connector
2. Pressure transducer

2. Remove the flange clamp that secures the pressure transducer to the 90° fitting, and remove the transducer, gasket and flange clamp (Figure 10).

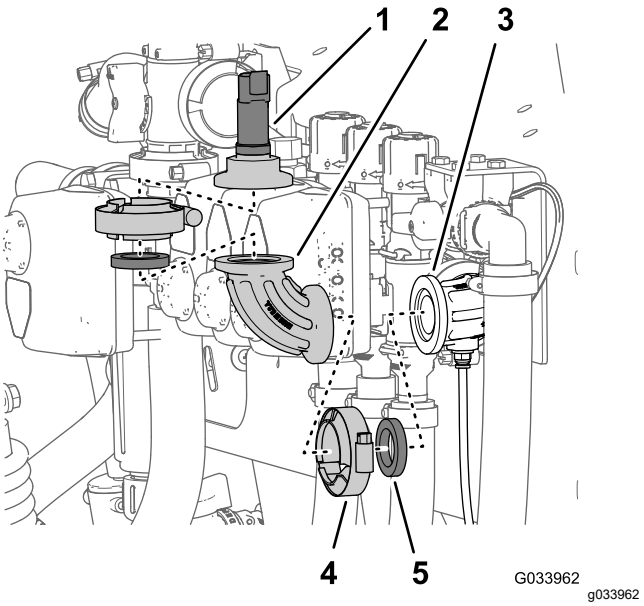

Figure 10

1. Pressure transducer
2. 90° fitting
3. 90° fitting (with a connector for the sense tube)
4. Flange clamp
5. Gasket

3. Remove the flange clamp that secures 90° fitting to the 90° fitting with a connector for the sense tube, and remove the 90° fitting, gasket and flange clamp (Figure 10)

Preparing the Control Valve (Multi Pro 5800—2016 and After)

1. Assemble the valve mount onto the control valve as shown in A of Figure 11.

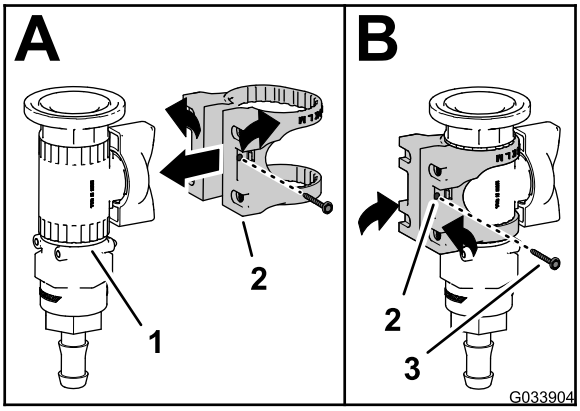

Figure 11

1. Control valve
2. Valve mount
3. Flange-head screw (#6)

2. Secure the valve mount to the control valve with the flange-head screw (#6), and tighten the screw by hand (B of Figure 11).
3. Assemble the valve mount to the control-valve bracket (Figure 12) with the 4 bolts (6 x 12 mm) and 4 flat washers; torque the bolts to 10 to 12 N·m (86 to 106 in-lb).

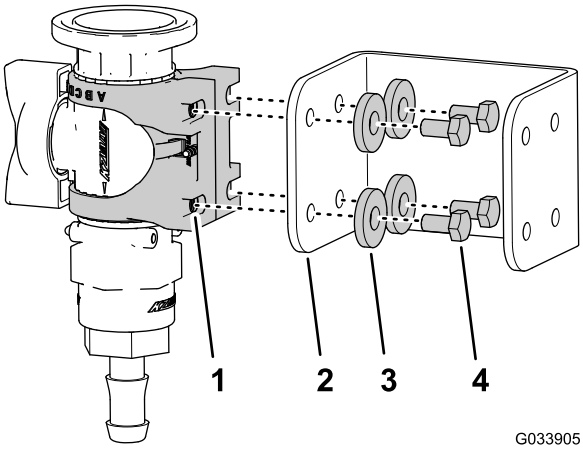

Figure 12

1. Valve mount
2. Control-valve bracket
3. Flat washer
4. Bolt (6 x 12 mm)

4. Align the flange of the T-fitting to the flange of the control valve as shown in Figure 13.

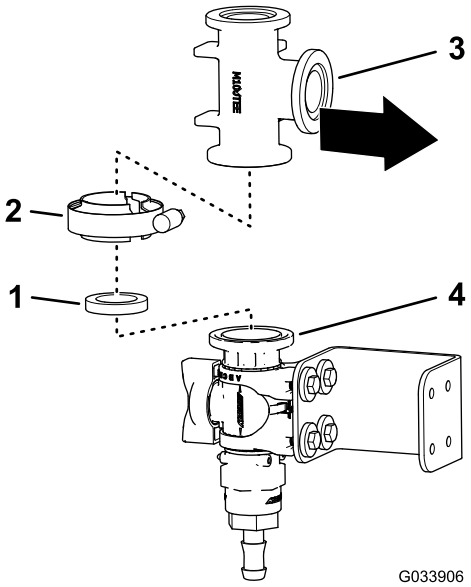

Figure 13

1. Gasket
2. Flange clamp
3. T-fitting
4. Flange (control valve)

5. Loosely attach the T-fitting to the control valve with a gasket and flange clamp (Figure 13).
6. Align the flange of the pressure transducer with the flange of the T-fitting as shown in Figure 14.

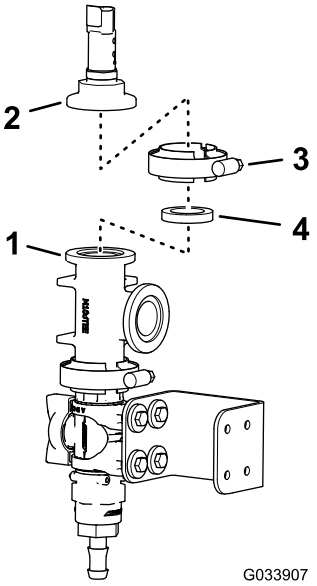

Figure 14

1. Flange (control valve)
2. Flange (pressure transducer)
3. Flange clamp
4. Gasket

7. Assemble the pressure transducer to the T-fitting with a gasket and flange clamp, and tighten the clamp by hand (Figure 14).

Drilling the Manifold Mount (Multi Pro 5800—2016 and After)

1. Align the flange of the T-fitting with the flange of the 90° fitting with a connector for the sense tube (Figure 15).

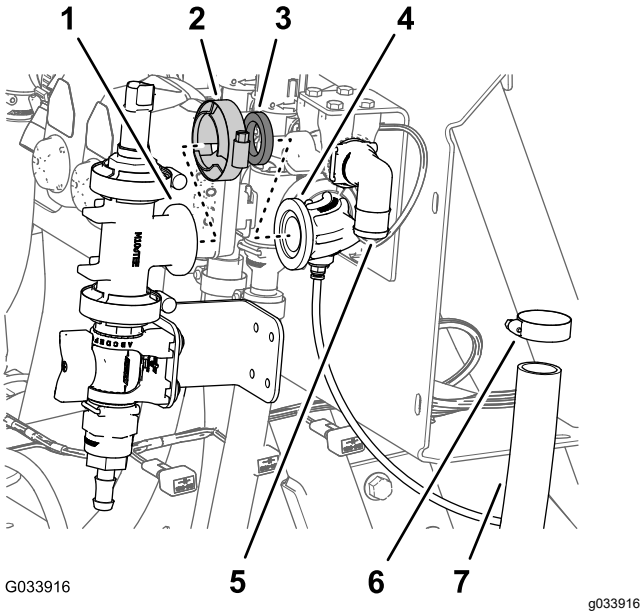

Figure 15

1. Flange (T-fitting)
2. Flange clamp
3. Gasket
4. 90° fitting (with a connector for the sense tube)
5. 90° fitting (section-valve bypass)
6. Hose clamp
7. Hose (section-valve bypass)

2. Loosely assemble the T-fitting and the 90° fitting with a gasket and a flange clamp (Figure 15)

   Note: Rotate the control-valve bracket as necessary to align it flush with the surface of the valve mount.

3. Using the control-valve bracket as a template, mark the location of the holes in the bracket onto the surface of the manifold mount (Figure 16).

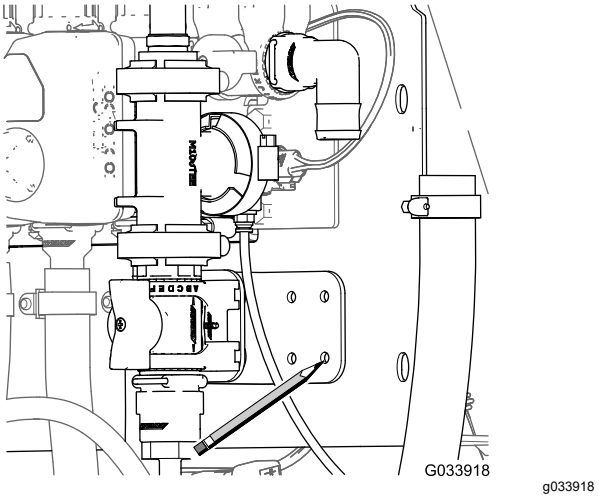

Figure 16

4. Remove the clamp, gasket, T-fitting with the flange from the 90° fitting with a connector for the sense tube (Figure 15).
5. Center punch the marks on the manifold mount that you made in step 3.
6. Drill 4 holes 6 mm (1/4 inch) into the manifold mount at the centerpunch marks that you made in step 5.

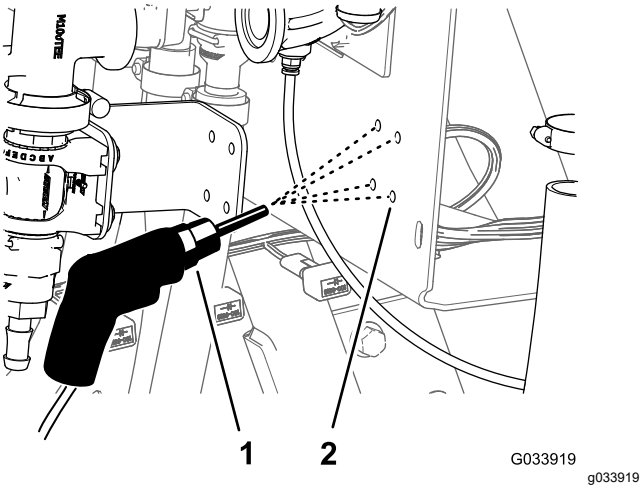

Figure 17

1. Drill and drill bit—6 mm (1/4 inch)
2. Manifold mount

Assembling the Control Valve (Multi Pro 5800—2016 and After)

1. Align the flange of the T-fitting with the flange of the 90° fitting with a connector for the sense tube (Figure 18).

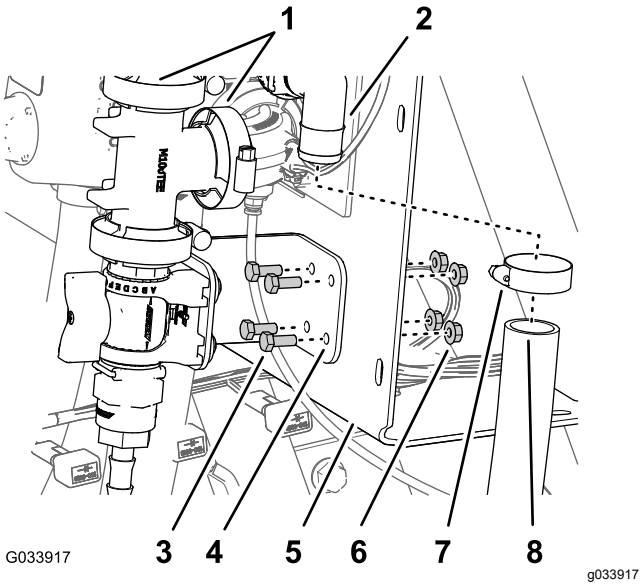

Figure 18

1. Flange clamps (with gasket)
2. 90° fitting (section-valve bypass)
3. Flange head bolt (6 x 16 mm)
4. Control-valve bracket
5. Manifold mount
6. Flange locknut (6 mm)
7. Hose clamp
8. Hose (section-valve bypass)

2. Loosely assemble the T-fitting and the 90° fitting with a gasket and a flange clamp (Figure 18).
3. Assemble the control-valve bracket to the manifold mount (Figure 19) with 4 flange head bolt (6 x 16 mm) and 4 flange locknut (6 mm); torque the bolts to 10 to 12 N·m (86 to 106 in-lb).
4. Tighten by hand the flange clamp that secures the control valve and the T-fitting (Figure 13) and the flange clamp that secures T-fitting to the 90° fitting with a connector for the sense tube (Figure 15 and Figure 18).
5. Connect the 3-socket connector for the pressure transducer (Figure 19).

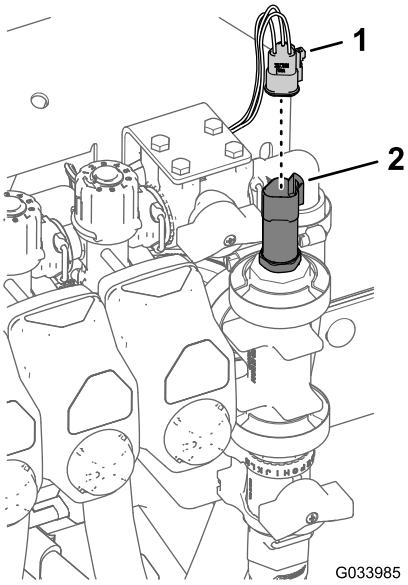

Figure 19

1. 3-socket connector
2. Pressure transducer

6. Assemble the spray-wand hose onto the barbed-hose fitting of the control valve, and secure the hose to the fitting with a hose clamp (Figure 20).

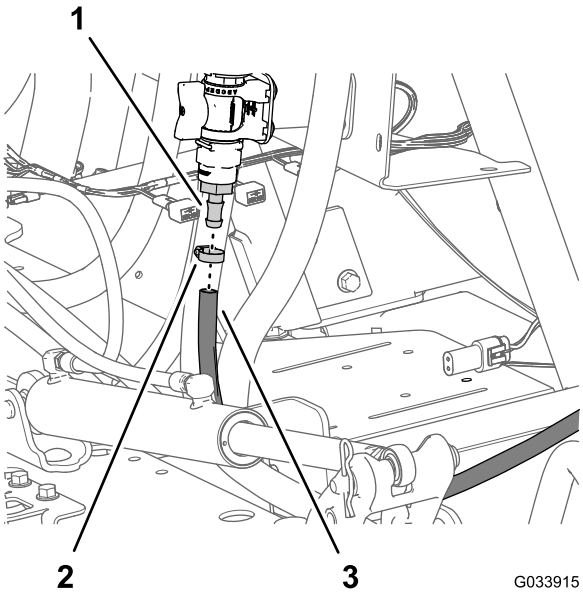

Figure 20

1. Barbed-hose fitting (control valve)
2. Hose clamp
3. Spray-wand hose

5

Connecting the Spray Hose

Parts needed for this procedure:

1	Spray gun assembly
1	Straight barbed fitting
1	Hose clamp

Procedure

Note: Use PTFE tape to seal tapered pipe thread fittings.

1. Secure the straight barbed fitting to the open end of the hose-reel supply hose with a hose clamp.

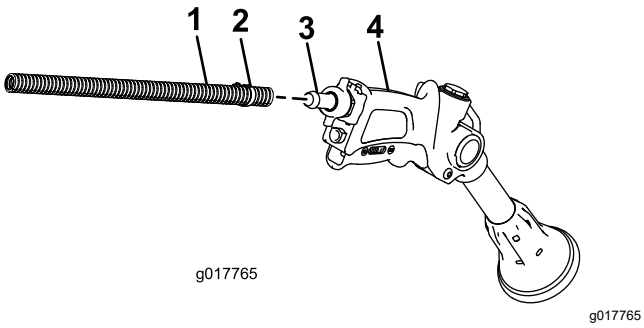

Figure 21

1. Hose
2. Hose clamp
3. Straight barbed fitting
4. Spray gun

2. Wrap the excess hose around the hook on the tank, and store the spray gun in the bracket.
3. Connect the negative battery wire to the battery.
4. Calibrate the bypass adjustment assembly; refer to your machine *Operator's Manual*.

Operation

⚠ WARNING

Fluid under pressure can penetrate skin and cause injury.

- **Keep your body and hands away from nozzles that eject fluid that is under high pressure.**
- **Do not aim the sprayer at any person or animal.**
- **Ensure that all fluid hoses and lines are in good condition and all connections and fittings are tight before applying pressure to the system.**
- **Use cardboard or paper to find leaks.**
- **Safely relieve all pressure in the system before performing any work on it.**
- **Get immediate medical help if fluid is injected into the skin.**
- **Hot liquids and chemicals can cause burns or other harm.**

Turf Care Precautions while Operating in Stationary Modes

Important: **Under some conditions, heat from the engine, radiator, and muffler can potentially damage the grass when operating the sprayer in a stationary mode. Stationary modes include tank agitation, hand spraying, or using a walking boom.**

Use the following precautions:

- **Avoid** stationary spraying when conditions are very hot and/or dry, as turf can be more stressed during these periods.
- **Avoid** parking on the turf while stationary spraying. Park on a cart path whenever possible.
- **Minimize** the amount of time the machine is left running over any particular area of turf. Both time and temperature affect how much the grass may be damaged.
- **Set the engine speed as low as possible** to achieve the desired pressure and flow. This will minimize the heat generated and the air velocity from the cooling fan.
- **Allow heat to escape** upward from the engine compartment by raising the engine guard/seat assemblies during stationary operation rather than being forced out under the vehicle. Refer to your

Operator's Manual for more information on raising the seat assemblies.

Note: Use a heat shield blanket underneath the vehicle during stationary operation if you desire additional heat protection. Contact an Authorized Toro Dealer to obtain a Toro heat shield blanket kit for turf sprayers.

Switching from Boom Spray Mode to Hand Spray Mode

1. Stop the machine, turn the booms off, and set the parking brake.

   ⚠ WARNING

   Driving while using the hand sprayer can cause loss of control, resulting in injury or death. Do not operate the hand sprayer while driving.

2. At the back of the machine, ensure that the trigger lock on the spray gun is locked.
3. Rotate the green handle on the control valve 90 degrees.
4. At the operator's position, turn the pump on.
5. Switch the master boom to the ON position.
6. Set the engine to the desired speed, then engage the neutral engine speed lock.

   Important: **Do not use a pressure setting higher than 1034 kPa (150 psi) with the hand sprayer.**

Switching from Hand Spray Mode to Boom Spray Mode

1. Rotate the green handle on the control valve 90 degrees..
2. Direct the spray gun nozzle at an area where it is safe to spray, release the trigger lock, and pull the trigger until all remaining fluid is out of the hose, then set the trigger lock.
3. Return the spray gun to the holder.
4. Return the engine to idle speed.
5. Stop the pump.

   Important: **Ensure that you flush the spray gun with fresh clean water during your daily cleaning routine (refer to your sprayer *Operator's Manual*). Failure to properly clean the spray gun may degrade the performance and reliability of the spray gun.**

6. Use the rate switch to set the desired spray pressure.

Notes:

Notes:

UK Declaration of Incorporation

The Toro Company, 8111 Lyndale Ave. South, Bloomington, MN, USA declares that the following unit(s) conform(s) to the directives listed, when installed in accordance with the accompanying instructions onto certain Toro models as indicated on the relevant Declarations of Conformity.

Model No.	Serial No.	Product Description	Invoice Description	General Description	Regulation
41118	315000001 and Up	Hand Spray Gun Kit	HAND SPRAY WAND KIT	Sprayer Accessories	2006/42/EC, 2000/14/EC and 2005/88/EC

Relevant technical documentation has been compiled as required per Part B of Annex VII of 2006/42/EC.

We will undertake to transmit, in response to requests by national authorities, relevant information on this partly completed machinery. The method of transmission shall be electronic transmittal.

This machinery shall not be put into service until incorporated into approved Toro models as indicated on the associated Declaration of Conformity and in accordance with all instructions, whereby it can be declared in conformity with all relevant Directives.

This declaration has been issued under the sole responsibility of the manufacturer.
The object of the declaration is in conformity with relevant UK legislation.



Tom Langworthy
Engineering Director
8111 Lyndale Ave. South
Bloomington, MN 55420, USA
November 3, 2022

Authorized Representative:

Marcel Dutrieux
Manager European Product Integrity
Toro U.K. Limited
Spellbrook Lane West
Bishop's Stortford
CM23 4BU
United Kingdom

UK Declaration of Incorporation

The Toro Company, 8111 Lyndale Ave. South, Bloomington, MN, USA declares that the following unit(s) conform(s) to the regulations listed, when installed in accordance with the accompanying instructions onto certain Toro models as indicated on the relevant Declarations of Conformity.

Model No.	Serial No.	Product Description	Invoice Description	General Description	Regulation
41118	315000001 and Up	Hand Spray Gun Kit	HAND SPRAY WAND KIT	Sprayer Accessories	S.I. 2001 No. 1701, S.I. 2008 No. 1597

Relevant technical documentation has been compiled as required per S.I. 2008 No. 1597.

We will undertake to transmit, in response to requests by national authorities, relevant information on this partly completed machinery. The method of transmission shall be electronic transmittal.

This machinery shall not be put into service until incorporated into approved Toro models as indicated on the associated Declaration of Conformity and in accordance with all instructions, whereby it can be declared in conformity with all relevant regulations.

This declaration has been issued under the sole responsibility of the manufacturer.
The object of the declaration is in conformity with relevant UK legislation.



Tom Langworthy
Engineering Director
8111 Lyndale Ave. South
Bloomington, MN 55420, USA
November 3, 2022

Authorized Representative:

Marcel Dutrieux
Manager European Product Integrity
Toro U.K. Limited
Spellbrook Lane West
Bishop's Stortford
CM23 4BU
United Kingdom