Form No. 3458-510 Rev A

Electric Hose Reel Kit

2015 and After Multi Pro® 1750 Turf Sprayer

Model No. 41159—Serial No. 315000001 and Up

Model No. 41159—Serial No. 316000001 and Up

Model No. 41159—Serial No. 400000000 and Up

Model No. 41159—Serial No. 403437001 and Up

Installation Instructions

Introduction

The Electric Hose Reel Kit is a dedicated attachment for a turf spray application vehicle and is intended to be used by professional, hired operators in commercial applications. It is primarily designed for spraying on well-maintained lawns in parks, golf courses, sports fields, and on commercial grounds

Read this information carefully to learn how to operate and maintain your product properly and to avoid injury and product damage. You are responsible for operating the product properly and safely.

Visit www.Toro.com for more information, including safety tips, training materials, accessory information, help finding a dealer, or to register your product.

Whenever you need service, genuine Toro parts, or additional information, contact an Authorized Service Dealer or Toro Customer Service and have the model and serial numbers of your product ready. Figure 1 identifies the location of the model and serial numbers on the product. Write the numbers in the space provided.

Important: **With your mobile device, you can scan the QR code on the serial number decal (if equipped) to access warranty, parts, and other product information.**

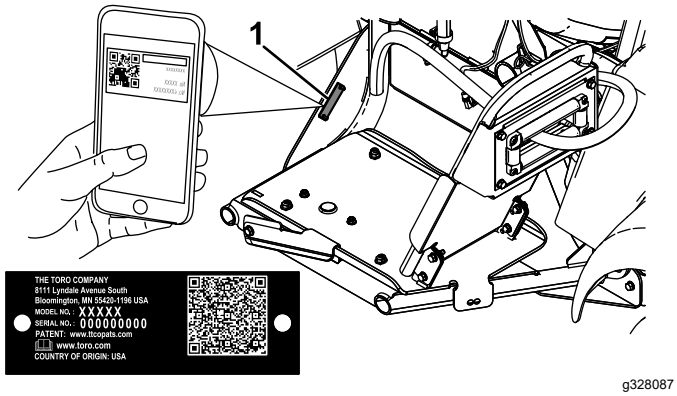

g328087

Figure 1

1. Model and serial number location

Model No. _____

Serial No. _____

Note: This product complies with all relevant European directives. For details, please see the Declaration of Incorporation (DOI) at the back of this publication.

Determine the left and right sides of the machine from the normal operating position.

Important: **Teflon tape is required for the installation of this kit. The tape is used to wrap threads of fittings before assembly. Threads should be wrapped starting at the base and traveling to the tip of fitting to ensure a waterproof seal.**

Important: **A non-petroleum based lubricant, such as vegetable oil, will be required for the installation of this kit.**

© 2022—The Toro® Company
8111 Lyndale Avenue South
Bloomington, MN 55420

Register at www.Toro.com.

Original Instructions (EN)
Printed in the USA
All Rights Reserved

3458-510

Safety

Improper use or maintenance by the operator or owner can result in injury. To reduce the potential for injury, comply with these safety instructions and always pay attention to the safety-alert symbol ⚠, which means Caution, Warning, or Danger—personal safety instruction. Failure to comply with the instruction may result in personal injury or death.

Read also the safety and operation instructions in the vehicle *Operator's Manual*.

- Do not aim the hand sprayer at people or animals. Fluids under high pressure can penetrate skin and cause severe injury, possibly resulting in amputation or death. Hot liquids and chemicals can also cause burns or injury. If any part of the body comes in contact with the spray stream, immediately consult a physician familiar with injected fluid injuries.
- Do not place your hand or any other part of your body in front of the spray nozzle.
- Do not leave the equipment under pressure when you are not present.
- Do not use the hand sprayer if the hose, trigger lock, nozzle, or any other part is damaged or missing.
- Do not use the hand sprayer if there are any leaks in any hoses, fittings, or other components.
- Do not spray near power lines.
- Do not drive while spraying with a hand sprayer.
- Wear a chemical suit, goggles, respirator, rubber shoes, and protective gloves when spraying chemicals with the hand sprayer.
- Operate the machine only in good visibility and appropriate weather conditions. Do no operate the machine when there is a risk of lightning.

⚠ CAUTION

Chemicals are hazardous and can cause personal injury.

- **Read the directions on the chemical labels before handling the chemicals and follow all manufacturer recommendations and precautions.**
- **Keep chemicals away from your skin. Should contact occur, wash the affected area thoroughly with soap and clean water.**
- **Wear goggles and any other protective equipment recommended by the chemical manufacturer.**

Installation

Loose Parts

Use the chart below to verify that all parts have been shipped.

Procedure	Description	Qty.	Use
1	No parts required	–	Prepare the machine.
2	Wire harness Switch Weatherproof cap and nut Small R-clamp Flange nut (3/8) Carriage bolt Fusible link wire harness [108-9455] Relay [99-7435] Push-in fastener	1 1 1 1 1 1 1 1 1	Install the wire harness.
3	Hose-reel frame Bolt (5/16) Flange nut (5/16 inch) Swivel plate Hose reel Large carriage bolt Flange nut (3/8 inch) Handle Mud shield Spring clip Locknut Small carriage bolt Large R-clamp Spray gun bracket Spacer Self-tapping screws Thrust washer Snap ring	1 10 10 1 1 4 4 1 1 1 2 2 2 1 2 2 1 1	Mount the hose reel.
4	No parts required	–	Remove the actuator and valve cluster.
5	Control valve Hose-reel supply hose Gasket clamp Straight hosebarb Shut-off valve Cap (1/2 inch) Fitting	1 1 1 1 1 1 1	Install the control valve.
6	Long hose with fitting Spray gun Plastic hose clamp	1 1 1	Connect the spray hose.

1

Preparing the Machine

No Parts Required

Procedure

1. Empty the sprayer tank.
2. Clean and rinse the sprayer tank; refer to the *Operator's Manual* for your machine.
3. Park the machine on a level surface, engage the parking brake, shut off the pump, shut off the engine, remove the key, and wait for all moving parts to stop.
4. Disconnect the negative battery cable.
5. Disconnect the positive battery cable.

2

Installing the Wire Harness

Parts needed for this procedure:

1	Wire harness
1	Switch
1	Weatherproof cap and nut
1	Small R-clamp
1	Flange nut (3/8)
1	Carriage bolt
1	Fusible link wire harness [108-9455]
1	Relay [99-7435]
1	Push-in fastener

Installing the Small R-Clamp

1. Remove the fasteners securing the front tank straps at the top of the tank.

   Note: Retain all parts.
2. Install a carriage bolt to the lower inboard hole on the right tank strap.
3. Install the tank strap fasteners removed previously to secure the straps to the tank.

   Note: Make sure the strap is secure to the tank. Do not overtighten it.
4. Secure a small R-clamp to the carriage bolt using a flange nut (3/8 inch) as shown in Figure 2.
5. Route the hose reel end of the wiring harness through the R-clamp as shown in Figure 2.

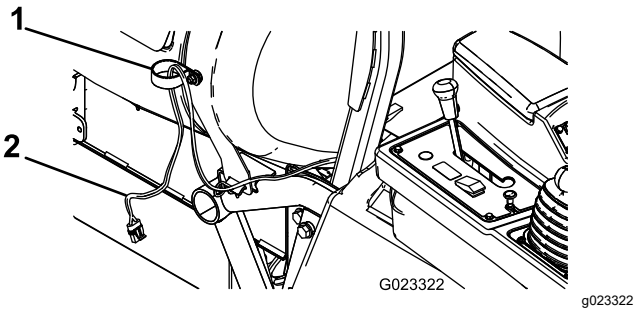

Figure 2

1. R-clamp (small)
2. Wiring harness

Installing the Switch

1. Remove the 4 hex-head screws that secure the control-panel cover to the console, and lift the panel slightly.

   Note: If needed, remove the knob from the differential-lock rod.

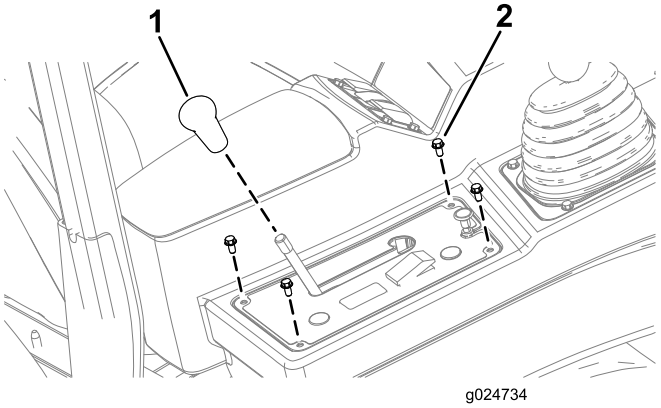

Figure 3

1. Knob
2. Hex-head screw (1/4 x 1/2 inch)

2. Remove the round plug from the control-panel cover (Figure 4).

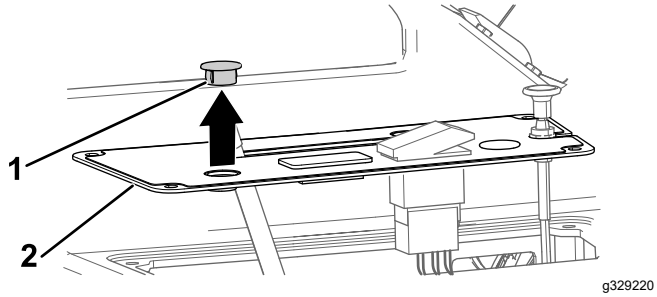

Figure 4

1. Panel plug (round)
2. Control-panel cover

3. Assemble the switch to the control-panel cover with the jam nut, and tighten the jam nut by hand (Figure 5).

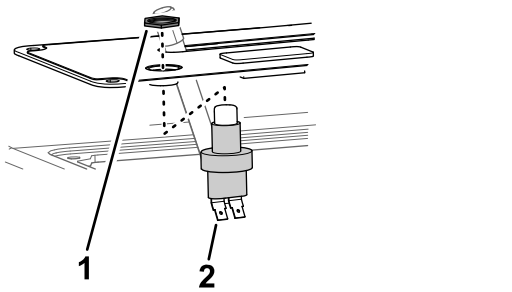

Figure 5

1. Jam-nut (switch)
2. Switch

4. Install the button cover onto the switch (Figure 6).

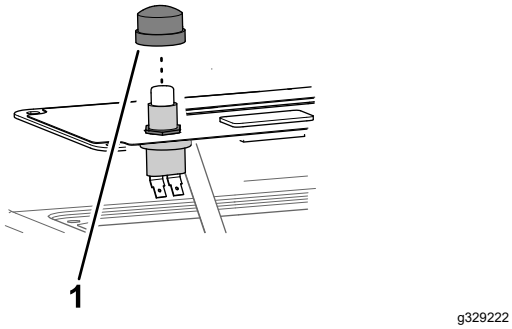

Figure 6

1. Button cover

Connecting the Wire Harness

1. Connect the 2 connectors on the wire harness to the 2-blade connector on the switch (Figure 7).
2. Secure the control-panel cover to the console arm using the previously removed bolts.

   Note: Install the knob on the differential-lock rod if previously removed.

3. Connect the nearby connector into the hose reel plug on the main wiring harness, located under the front portion of the control arm.
4. Plug the next connector into the relay (Figure 7), and mount the relay to the outer hole on the frame near the existing relays.
5. Connect the fusable link to the red wire attached to the positive (+) battery terminal (Figure 7).
6. Connect the negative (-) connection on the wire harness to the negative (-) battery terminal.
7. Connect the far end of the wiring harness to the fuse block ground (Figure 7).

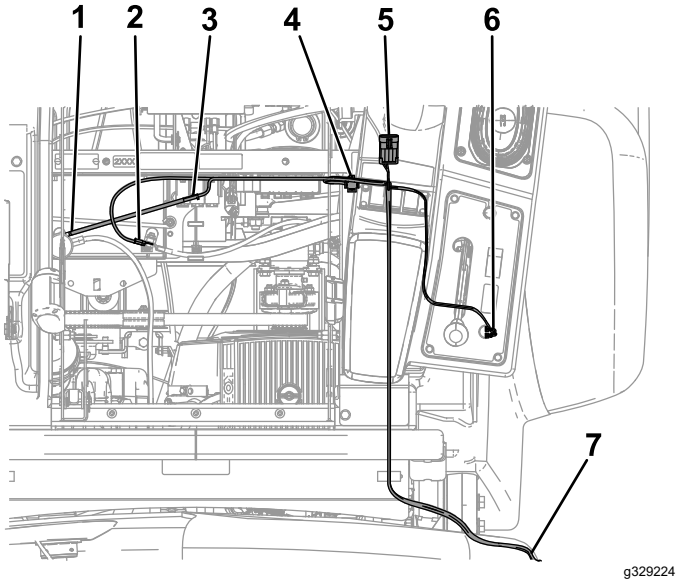

Figure 7

1. To positive (+) battery terminal
2. To negative (-) battery terminal
3. Fusable link
4. To relay
5. To main wire harness plug
6. To switch
7. To fuse block ground

3

Mounting the Hose Reel

Parts needed for this procedure:

1	Hose-reel frame
10	Bolt (5/16)
10	Flange nut (5/16 inch)
1	Swivel plate
1	Hose reel
4	Large carriage bolt
4	Flange nut (3/8 inch)
1	Handle
1	Mud shield
1	Spring clip
2	Locknut
2	Small carriage bolt
2	Large R-clamp
1	Spray gun bracket
2	Spacer
2	Self-tapping screws
1	Thrust washer
1	Snap ring

Procedure

1. Mount the hose-reel frame to the side of the machine using 4 bolts (5/16 inch) and 4 flange nuts (5/16 inch) as shown in Figure 8.

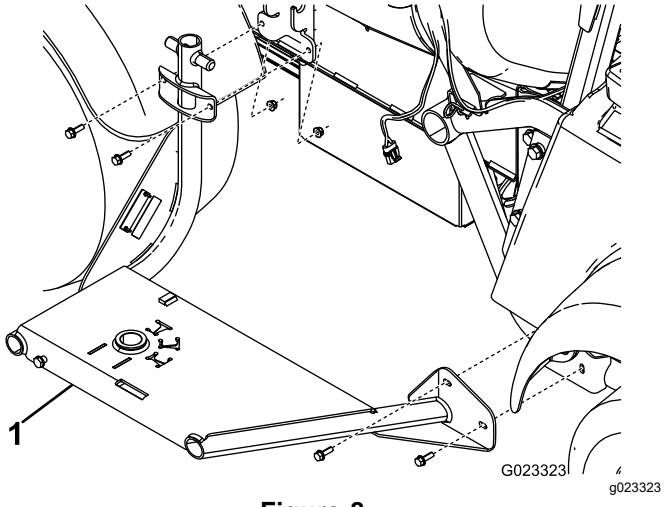

Figure 8

1. Hose-reel frame

2. Attach the swivel plate to the bottom of the hose reel using 4 carriage bolts and 4 flange nuts (3/8 inch) (Figure 9).

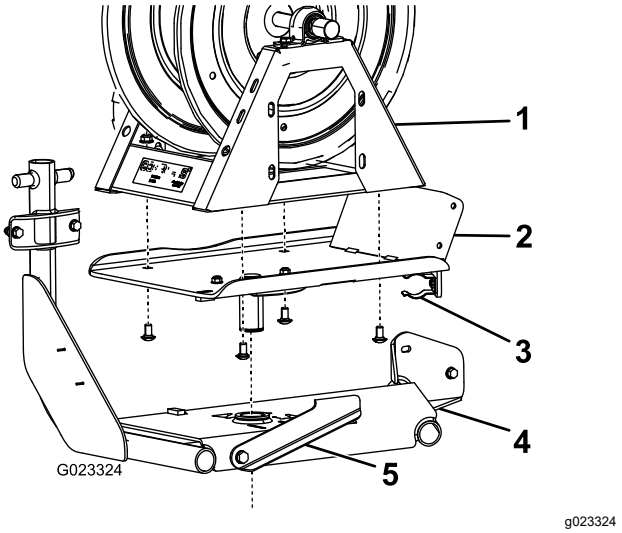

Figure 9

1. Hose reel
2. Swivel plate
3. Spring clip
4. Hose reel frame
5. Swivel lock

3. Drop the swivel plate into the hole on the hose-reel frame (Figure 9).

   Note: Move the swivel lock to the left for ease of installation.

4. On the underside of the hose reel frame, attach the thrust washer and snap ring to the post on the swivel plate (Figure 10).

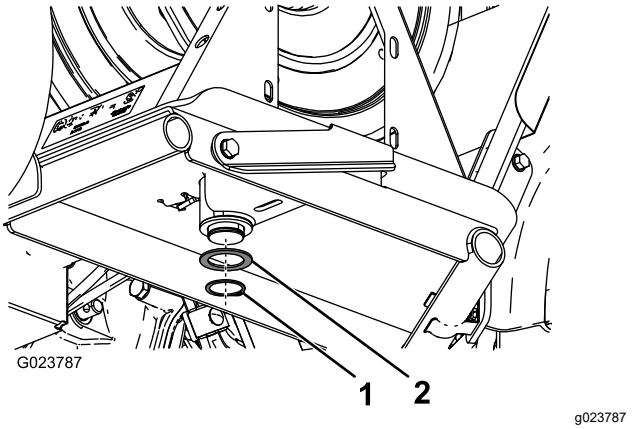

Figure 10

1. Snap ring
2. Thrust washer

5. Loosely mount the handle to the swivel plate with 4 bolts (5/16 inch) (Figure 11).

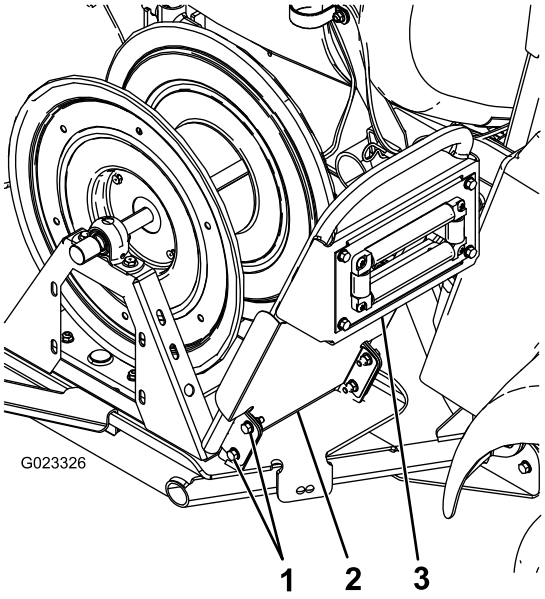

Figure 11

1. Bolts (5/16)
2. Mud shield
3. Handle

6. Attach the mud shield and handle to the swivel plate using the bolts installed in step 5 and 4 flange nuts (5/16 inch) (Figure 11).
7. Secure the top of the mud shield to the handle using 2 self-tapping screws (Figure 12).

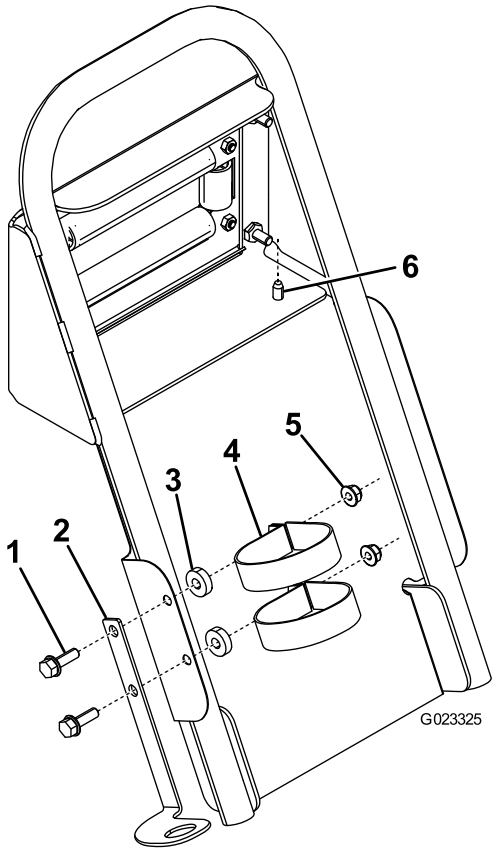

Figure 12

1. Bolt (5/16 inch)
2. Spray gun bracket
3. Spacer
4. R-clamp (large)
5. Flange nut (5/16 inch)
6. Self-tapping screw

8. Attach the spray gun holder to the mud shield as shown in Figure 12.
9. Connect the wiring harness to the hose reel.

4

Removing the Actuator and Valve Cluster

No Parts Required

Procedure

1. Remove the retainer that secures the actuator to the manifold valve for the section valve or agitation valve (Figure 13).

   Note: Squeeze the 2 legs of the retainer together while pushing it down.

   Note: Retain the actuator and retainer.

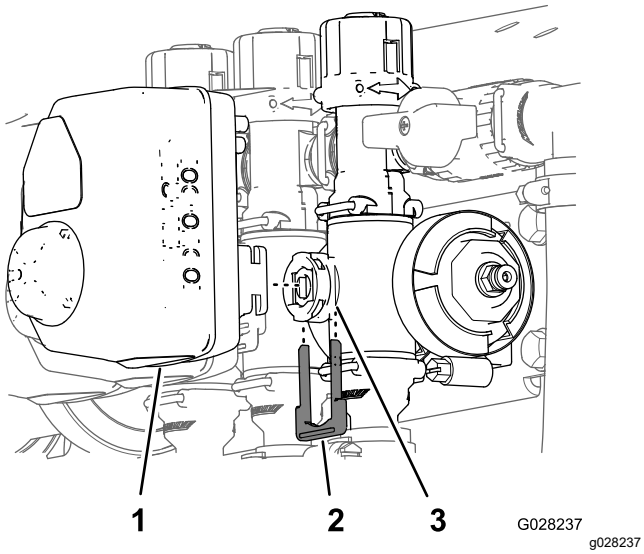

Figure 13

1. Actuator
2. Retainer
3. Stem port

2. Remove the actuator from the manifold valve.
3. Remove the retainers holding the boom bypass valve cluster assembly, end cap, and the fitting and hose assembly as shown in Figure 14.

   Note: You will not use the male cap, but keep the O-ring that is on the cap.

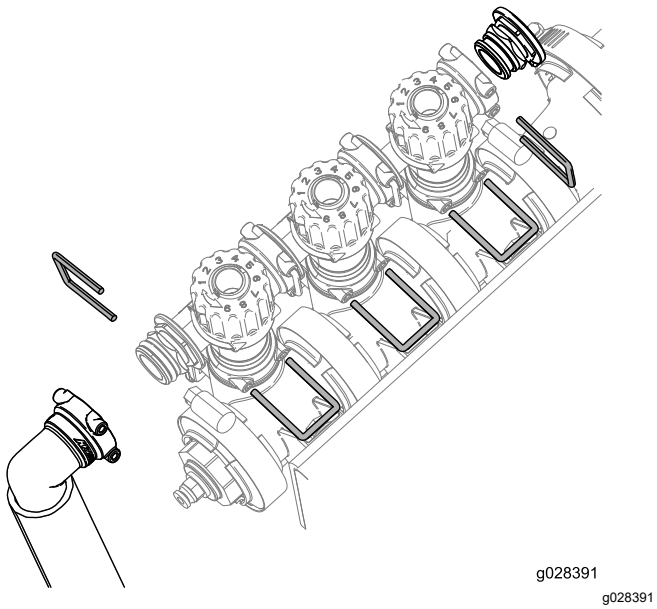

Figure 14

4. Note the current left and right knob settings.
5. Rotate the boom bypass valve cluster 180 degrees as shown in Figure 15.

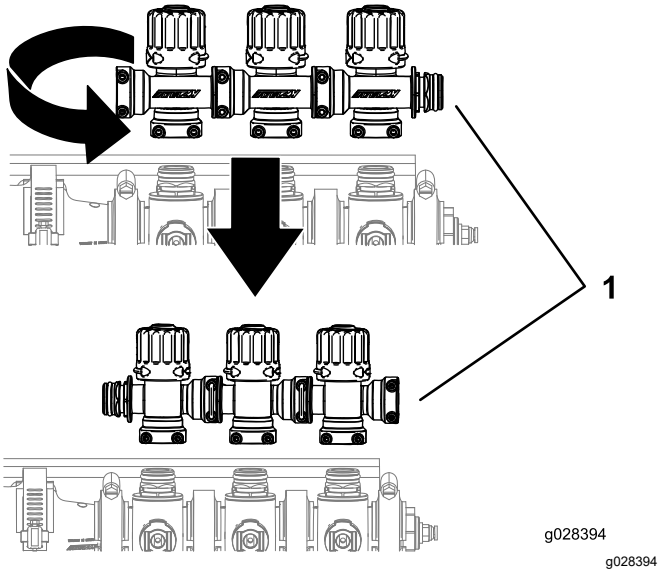

Figure 15

1. Boom valve cluster

6. Adjust the left and right knobs to the previous settings.

5
Installing the Control Valve

Parts needed for this procedure:

1	Control valve
1	Hose-reel supply hose
1	Gasket clamp
1	Straight hosebarb
1	Shut-off valve
1	Cap (1/2 inch)
1	Fitting

Procedure

1. Install the boom valve cluster using the retainers previously removed as shown in Figure 16.

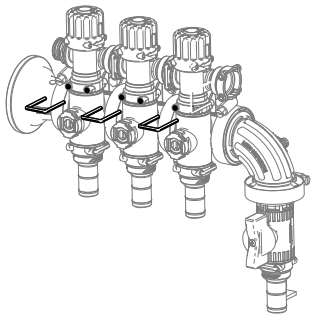

g329235

Figure 16

2. Install the valve-mount bracket onto the valve-mount frame using 2 flange-head bolts (1/4 x 0.625 inch) as shown in Figure 17.

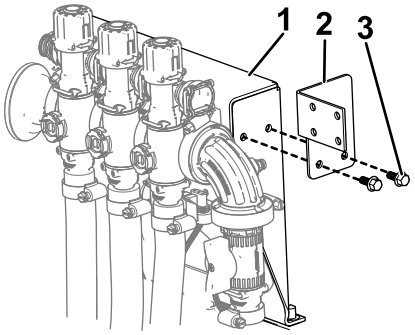

g329236

Figure 17

1. Valve-mount frame
2. Valve-mount bracket
3. Flange-head bolt (1/4 x 0.625 inch)

3. Assemble the valve mount onto the shut-off valve as shown in A of Figure 18.

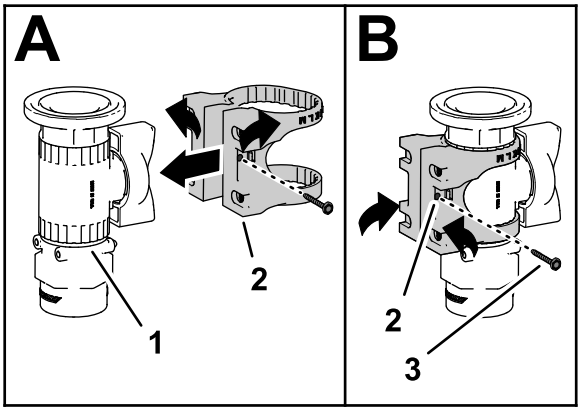

g329240

Figure 18

4. Secure the valve mount to the control valve with the flange-head screw (#6), and tighten the screw by hand (B of Figure 18).
5. Install the valve mount onto the valve-mount bracket using 4 bolts (M6) as shown in Figure 19.

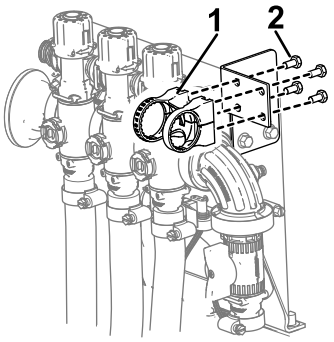

g329237

Figure 19

1. Valve mount
2. Bolt (M6)

6. Secure the shut-off valve to the boom valve with the previously removed o-ring and retainer (Figure 20).
7. Install the cap (1/2 inch), o-rings, fitting, and hose assembly onto the shut-off valve using the retainers previously removed as shown in Figure 20.

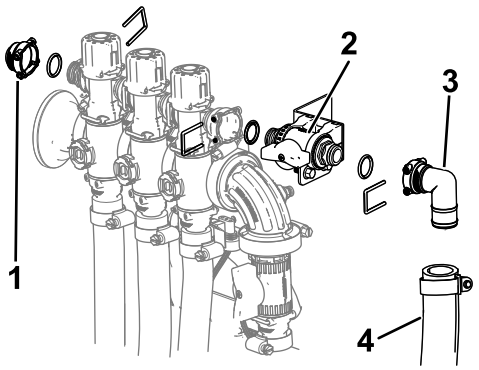

g329239

Figure 20

1. Cap (1/2 inch)
2. Shut-off valve installed in valve mount
3. Fitting
4. Hose assembly

8. Remove the pressure-sense hose from the coupler.
9. Disconnect the cap and coupler from the pressure-gauge port (Figure 21).

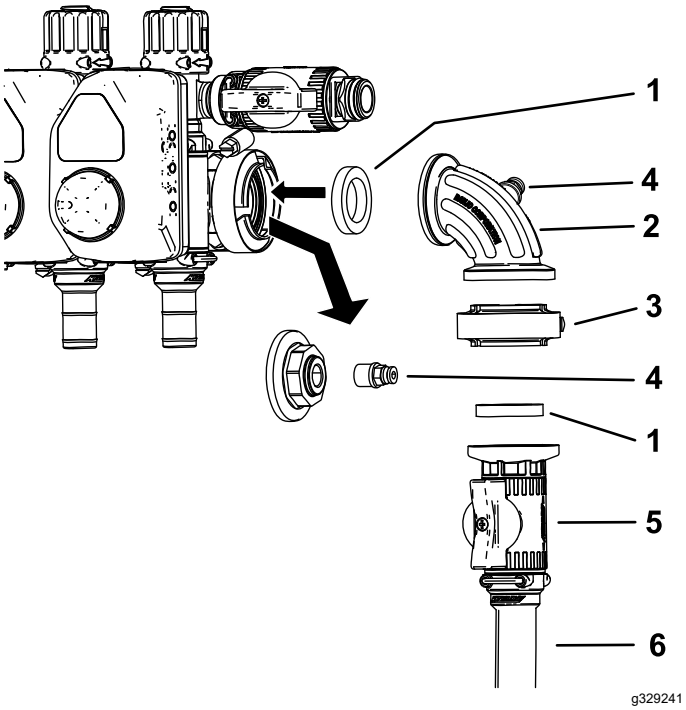

Figure 21

1. Gasket
2. 90-degree fitting
3. Gasket clamp
4. Coupler
5. Control valve
6. Hose-reel supply hose

10. Install the control valve assembly as shown in Figure 21.
11. Install the coupler into the open port on the 90-degree fitting (Figure 21).

    Note: The cap can be discarded.
12. Connect the pressure-sense hose to the coupler.
13. Connect the hose-reel supply hose to the control valve using a hose clamp.
14. Secure the straight hosebarb to the open end of the hose-reel supply hose with a hose clamp.
15. Route the hose-reel supply hose as shown in Figure 22 and attach it to the hose reel with a hose clamp.

    Note: If the Tank Cleanse Rinse Kit is installed, route the hose behind the rinse pump.

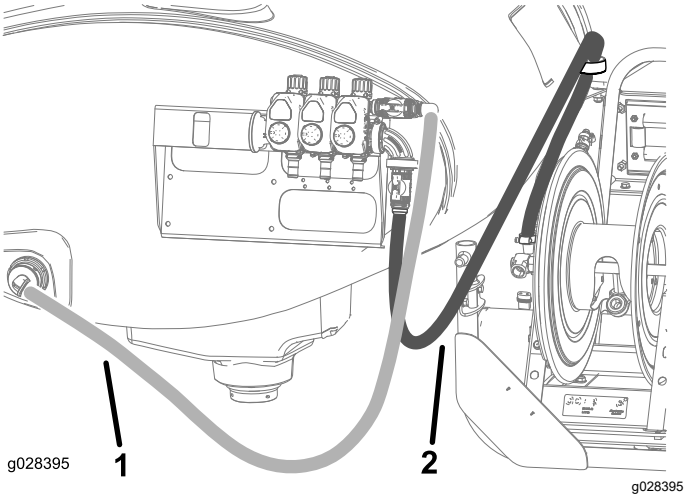

Figure 22

1. Tank-supply hose
2. Hose-reel supply hose

16. Cable tie the wiring harness to the supply hose using 2 cable ties.

6

Connecting the Spray Hose

Parts needed for this procedure:

1	Long hose with fitting
1	Spray gun
1	Plastic hose clamp

Procedure

1. Wrap Teflon® tape around the threads of the hose fitting on the long hose, and install the fitting into the connecting tube on the reel (Figure 23).

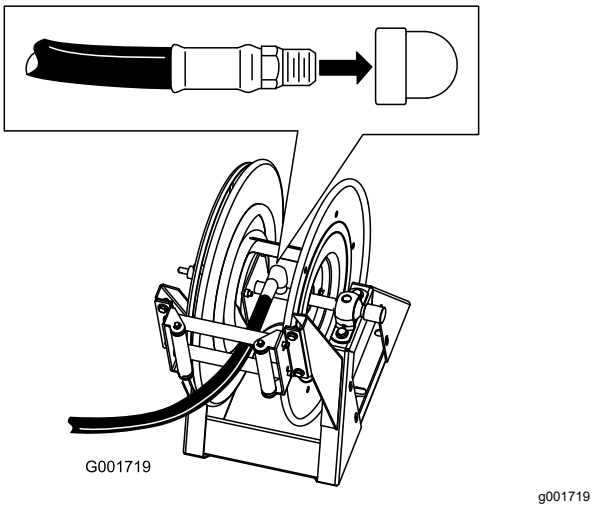

Figure 23

2. Connect the free end of the long hose to the fitting on the spray gun (Figure 24).

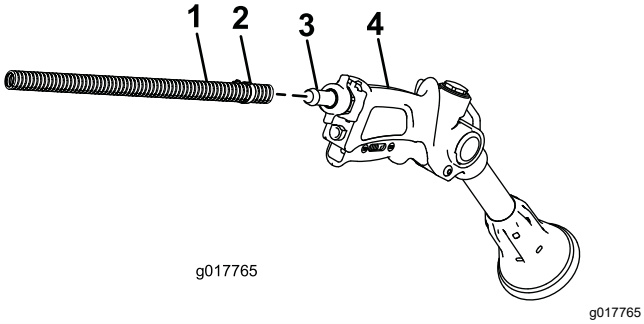

Figure 24

1. Hose
2. Hose clamp
3. Barb
4. Spray gun

3. Secure the end of the hose with a plastic hose clamp.
4. Connect the positive battery wire to the battery.
5. Connect the negative battery wire to the battery.
6. Press the hose wind button, and carefully guide the hose onto the reel moving the hose from side to side to evenly distribute the hose.

⚠ CAUTION

Hands, loose clothing, long hair, and jewelry could get caught in the hose and reel while rewinding and cause injury.

- **Keep your hands clear of the reel and hose while it is rewinding.**
- **Do not wear loose clothing or jewelry and tie up long hair.**

Operation

⚠ WARNING

Fluid under pressure can penetrate skin and cause injury.

- **Keep your body and hands away from nozzles that eject high-pressure fluid.**
- **Do not aim the sprayer at any person or animal.**
- **Make sure that all fluid hoses and lines are in good condition and that all connections and fittings are tight before applying pressure to the system.**
- **Use cardboard or paper to find leaks.**
- **Safely relieve all pressure in the system before performing any work on it.**
- **Get immediate medical help if fluid is injected into skin.**
- **Hot liquids and chemicals can cause burns or other harm.**

Important: **You must always empty and clean the sprayer immediately after each use. Failure to do so may cause the chemicals to dry or thicken in the lines, clogging the pump and other components.**

Clean the spray system after **each** spraying session. To properly clean the spray system:

- Use 3 separate rinses.
- Use a minimum of 50 gallons for each rinse.
- Use the cleaners and neutralizers as recommended by the chemical manufacturers.
- Use pure clean water (no cleaners or neutralizers) for the **last** rinse.

Switching from Boom Spray Mode to Hand Spray Mode

1. Stop the machine, turn the booms off, and set the parking brake.

⚠ WARNING

Driving while using the hand sprayer can cause loss of control, resulting in injury or death. Do not operate the hand sprayer while driving.

2. At the back of the machine, ensure that the trigger lock on the spray gun is locked.
3. Rotate the green handle on the control vale 90 degrees.
4. At the operating position, turn the pump on.
5. Switch the master boom to the ON position.
6. Set the engine to the desired speed, then engage the neutral engine speed lock.

Important: **Do not use a pressure setting higher than 1034 kPa (150 psi) with the hand sprayer.**

Spraying with the Hand Sprayer

1. Pull out the desired amount of hose from the reel.

Important: **Do not pull the hose with the spray gun. Always hold the hose and pull on it directly. Pulling on the hose with the gun may break the fitting on the gun or damage the hose.**

2. Release the trigger lock.
3. Direct the spray gun nozzle at the area to be sprayed and pull the trigger.
4. Release the trigger and set the trigger lock when you are finished.

Switching from Hand Spray Mode to Boom Spray Mode

1. Press the rewind button on the hose reel until only a few feet of hose is out of the reel.

Note: The hose-reel rewind button can only be used when the supervisor key on the sprayer console is in the unlocked position.

⚠ CAUTION

Hands, loose clothing, long hair, and jewelry could get caught in the hose and reel while rewinding and cause injury.

- **Keep your hands clear of the reel and hose while it is rewinding.**
- **Do not wear loose clothing or jewelry and tie up long hair.**

2. Rotate the green handle on the control vale 90 degrees.
3. Direct the spray gun nozzle at an area where it is safe to spray, release the trigger lock, and pull the trigger until all remaining fluid is out of the hose, then set the trigger lock.
4. Return the spray gun to the holder on the back of the reel.
5. Return the engine to idle speed.
6. Stop the pump.

Important: **Ensure that you flush the spray gun with fresh clean water during your daily cleaning routine (refer to your sprayer *Operator's Manual*). Failure to properly clean the spray gun may degrade the performance and reliability of the hose reel kit and spray gun.**

7. Use the rate switch to set the desired kPa (psi).

Notes:

Declaration of Incorporation

The Toro Company, 8111 Lyndale Ave. South, Bloomington, MN, USA declares that the following unit(s) conform(s) to the directives listed, when installed in accordance with the accompanying instructions onto certain Toro models as indicated on the relevant Declarations of Conformity.
1

Relevant technical documentation has been compiled as required per Part B of Annex VII of 2006/42/EC.

We will undertake to transmit, in response to requests by national authorities, relevant information on this partly completed machinery. The method of transmission shall be electronic transmittal.

This machinery shall not be put into service until incorporated into approved Toro models as indicated on the associated Declaration of Conformity and in accordance with all instructions, whereby it can be declared in conformity with all relevant Directives.

Certified:



John Heckel
Engineering Director
8111 Lyndale Ave. South
Bloomington, MN 55420, USA
September 21, 2022

Authorized Representative:

Marcel Dutrieux
Manager European Product Integrity
Toro Europe NV
Nijverheidsstraat 5
2260 Oevel
Belgium

UK Declaration of Incorporation

The Toro Company, 8111 Lyndale Ave. South, Bloomington, MN, USA declares that the following unit(s) conform(s) to the directives listed, when installed in accordance with the accompanying instructions onto certain Toro models as indicated on the relevant Declarations of Conformity.

Model No.	Serial No.	Product Description	Invoice Description	General Description	Regulation
41159	315000001 and Up	Electric Hose Reel Kit, Multi Pro 1750 Turf Sprayer	ELECTRIC HOSE REEL KIT - MP1750 KZ VALVE	Sprayer Accessories	S.I. 2001 No. 1701, S.I. 2008 No. 1597

Relevant technical documentation has been compiled as required per Schedule 9.

We will undertake to transmit, in response to requests by national authorities, relevant information on this partly completed machinery. The method of transmission shall be electronic transmittal.

This machinery shall not be put into service until incorporated into approved Toro models as indicated on the associated Declaration of Conformity and in accordance with all instructions, whereby it can be declared in conformity with all relevant Directives.

This declaration has been issued under the sole responsibility of the manufacturer.
The object of the declaration is in conformity with relevant UK legislation.



John Heckel
Engineering Director
8111 Lyndale Ave. South
Bloomington, MN 55420, USA
September 21, 2022

Authorized Representative:

Marcel Dutrieux
Manager European Product Integrity
Toro U.K. Limited
Spellbrook Lane West
Bishop's Stortford
CM23 4BU
United Kingdom



Count on it.