Form No. 3448-880 Rev C

TORO®

Count on it.

Parts Catalog

TimeMaster 76cm

Lawn Mower

Model No. 21810—Serial No. 409999159 and Up

Register at www.Toro.com.
Original Instructions (EN)

CE

3448-880 C

Ordering Replacement Parts

To order replacement parts, please supply the part number, the quantity, and the description of each part desired.

Understanding Reference Numbers

Each identified part in an illustration has a reference number. The reference number for a part also appears in the parts list, along with other information about the part.

This catalog uses two special reference number formats, one to indicate parts in a service assembly and another to indicate the quantity of a given part in an illustration.

Service Assembly Reference Numbers

Parts in service assemblies have reference numbers in the form a:b. The a represents the reference number of the entire service assembly and the b represents a sequential number unique to each part within the service assembly.

For example, a wheel assembly might be identified by reference number 6, the tire by 6:1, the valve by 6:2, and the wheel by 6:3. When you order the assembly identified by reference number 6, you receive all parts identified by reference numbers 6:1,6:2, and 6:3. However, you may also order any part individually. Reference numbers of this type appear in illustration and in parts lists.

Reference Numbers Indicating Quantity

In an illustration, if a reference number indicates more than one part, the reference number has the form nX y. The n represents the quantity of the part, the X is the multiplication symbol, and the y represents the reference number.

For example, in an illustration, the reference number 2X 37 means that two of the parts identified by reference number 37 are indicated.

Contents

Housing Assembly 4
Spindle and Belt Assembly 6
Side Discharge Chute Assembly 8
Bag Assembly 10
Engine and Belt Assembly 12
Front Wheel and Height-of-Cut Assembly 14
Rear Wheel and Height-of-Cut Assembly 16
Handle and Electrical Assembly 18
Attachments and Accessories 20

© 2022—The Toro® Company
8111 Lyndale Avenue South
Bloomington, MN 55420

Contact us at www.Toro.com.
Printed in the USA.
All Rights Reserved

Housing Assembly

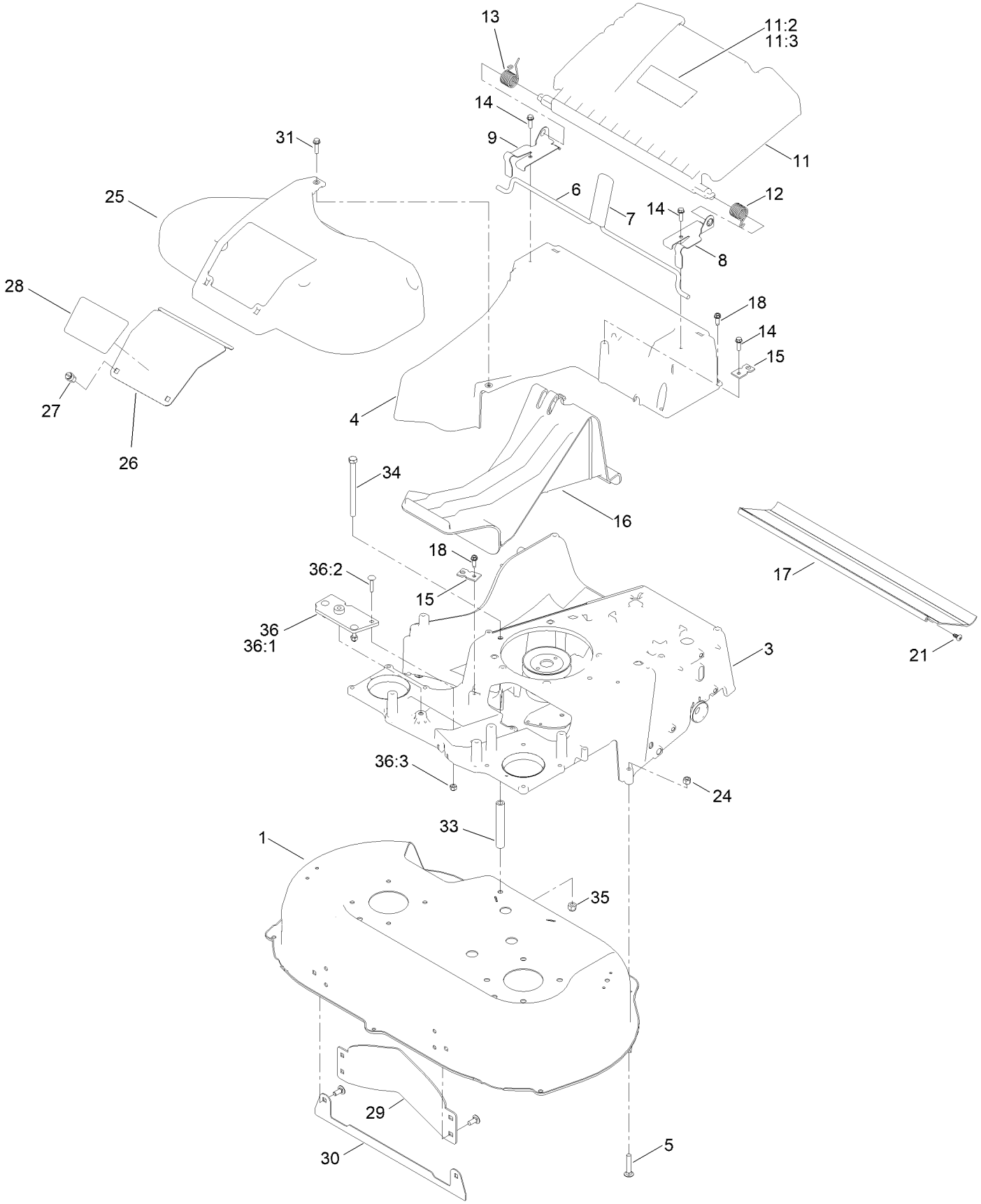

Housing Assembly (continued)

Ref.	Part Number	Qty.	Description
1	136-5874	1	Housing ASM
3	138-5390-01	1	Frame-30"
4	133-8177	1	Chute
5	137-3063	2	Bolt-Car
6	139-5415	1	Rod-Release, Handle
7	120-7018	1	Grip-Lever
8	121-9114	1	Bracket-Door, LH
9	121-9115	1	Bracket-Door, RH
11	120-7048	1	Rear Deflector ASM
11:2	120-7068	1	Artwork-Warning
11:3	131-4514	1	Decal-Warning
12	115-2859	1	Spring-Torsion
13	114-7924	1	Spring-Torsion
14	137-3099	3	Screw-Plastite, HWH
15	138-3224	2	Bracket-Cable, Traction
16	120-5225	1	Plug-Mulch
17	120-6241	1	Shield-Trailing
18	49-2040	8	Screw-HWHTF
21	139-1692	2	Screw-Thd
24	119-4038	2	Nut-Hex
25	139-5406	1	Cover-Belt
26	121-5793-03	1	Door-Access
27	121-5840	2	Fastener
28	125-2507	1	Decal-Access Panel
29	130-2352-01	1	Baffle-Control
30	125-5081-01	1	Plate-Deck
31	32144-86	1	Screw-HWHTF
33	139-5498	1	Spacer-Shield
34	139-5409	1	Screw-HH
35	137-3087	1	Nut-Hex
36	125-5072	1	Frame Plate Kit
36:1	125-2542	1	Plate-Frame
36:2	3229-3	3	Screw-CARR
36:3	3296-42	3	Nut-Lock, NI

Spindle and Belt Assembly

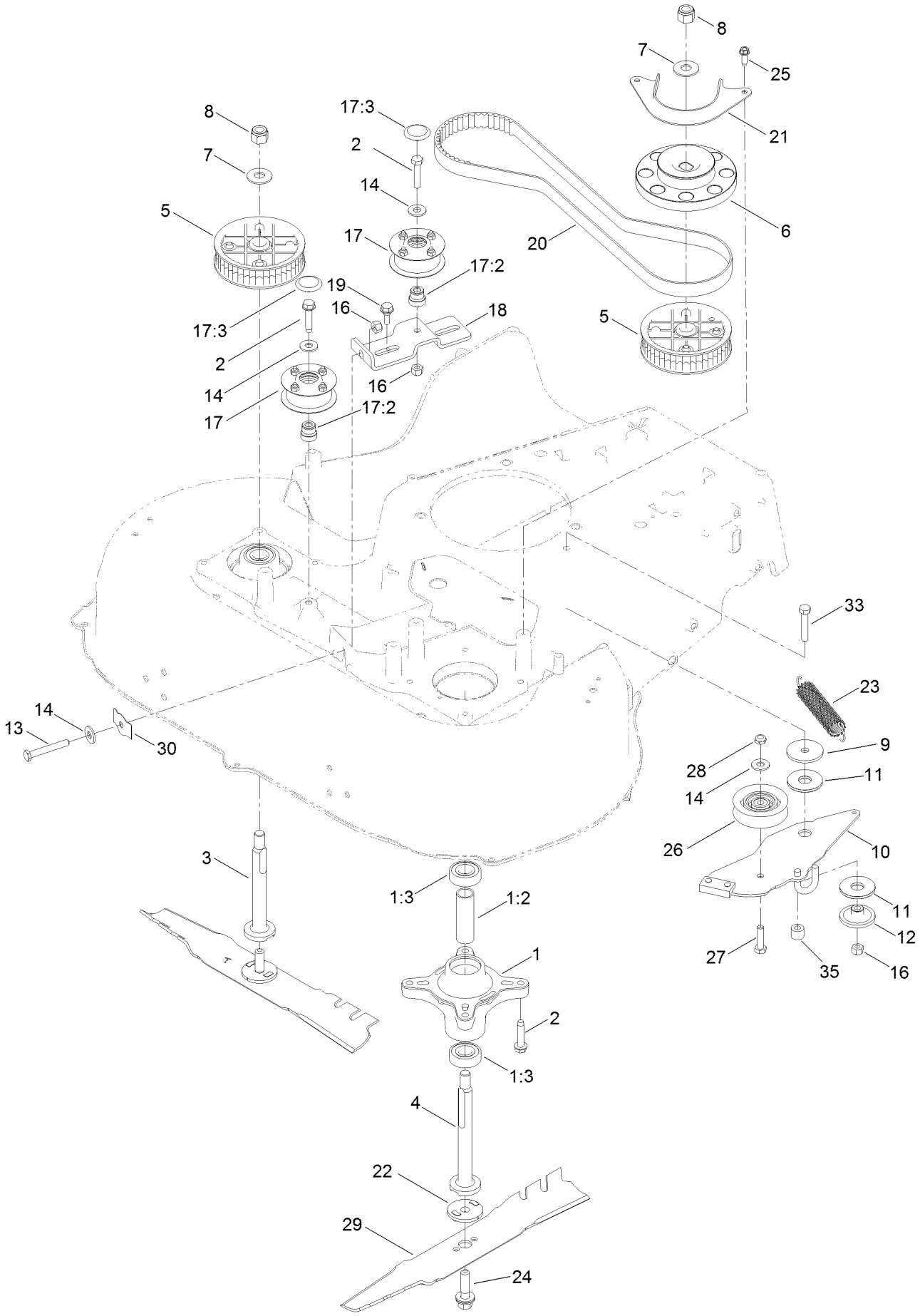

Spindle and Belt Assembly (continued)

Ref.	Part Number	Qty.	Description
1	121-9107	2	Spindle ASM
1:2	120-7935	2	Spacer
1:3	136-5441	2	Bearing-Ball
2	139-1731	9	Screw-Thd Roll, HWH
3	139-6612	1	Shaft-Spindle
4	139-6613	1	Shaft-Spindle
5	121-9100	2	Sprocket
6	130-6664	1	Pulley-Brake, Spindle
7	109-9505	2	Washer-Spring
8	139-1725	2	Nut-Hex
9	139-1726	1	Washer-Rebound
10	133-8102	1	Brake Arm ASM
11	121-2305	2	Washer-Friction, Composite
12	138-3244	1	Spacer
13	139-1728	1	Bolt-HH Ft
14	139-1723	4	Washer-Flat
16	119-4038	3	Nut-Hex
17	139-1758	2	Pulley Kit
17:2	131-4504	1	Adapter-Bore
17:3	125-2533	1	Plug-Cap
18	138-3232	1	Bracket-Idler
19	139-1730	2	Screw-Shoulder, HHF
20	120-3335	1	Belt-Synchronous
21	120-5245-03	1	Guide-Belt, Spindle
22	120-5236	2	Adapter-Blade
23	121-5808	1	Spring-Extension, Brake
24	125-2466	2	Bolt-Blade
25	49-2040	2	Screw-HWHTF
26	120-7082	1	Pulley-Idler
27	120-9696	1	Screw-HH
28	137-3089	1	Nut-Hex
29	116-6358-03	2	Blade-Rotary
30	121-2336	1	Spring-Flat
33	139-1719	1	Screw-HH
35	133-1964	1	Spacer

Side Discharge Chute Assembly

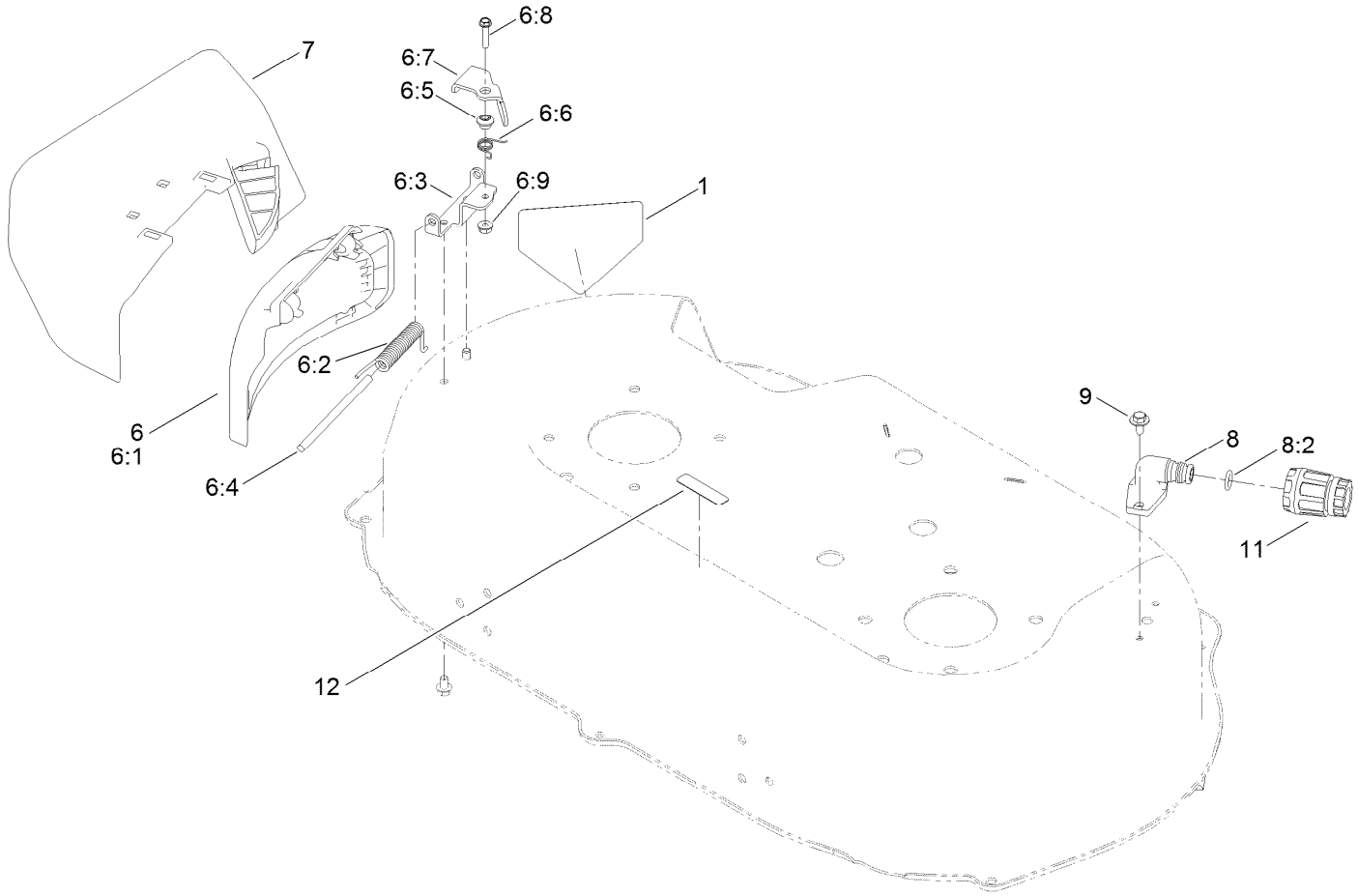

Side Discharge Chute Assembly (continued)

Ref.	Part Number	Qty.	Description
1	112-8760	1	Decal-Danger
6	138-5325	1	Side Deflector Service ASM
6:1	138-5317	1	Deflector-Discharge, Side
6:2	127-0721	1	Spring-Torsion, Cover
6:3	138-3293	1	Bracket-Lockout
6:4	99-5291	1	Rod-Cover
6:5	107-7463	1	Spacer
6:6	107-7462	1	Spring-Torsion
6:7	138-3292	1	Lever-Lockout
6:8	106-9169	1	Screw-HWH
6:9	32128-17	1	Nut-Lock, Flange
7	139-5416	1	Side Discharge Chute ASM
8	133-9289	1	Fitting-Washout
8:2	133-9290	1	O-Ring
9	139-1700	2	Screw-HWH, Thd Roll
11	95-3270	1	Connector-Hose
12	120-9570	1	Decal-Warning

Bag Assembly

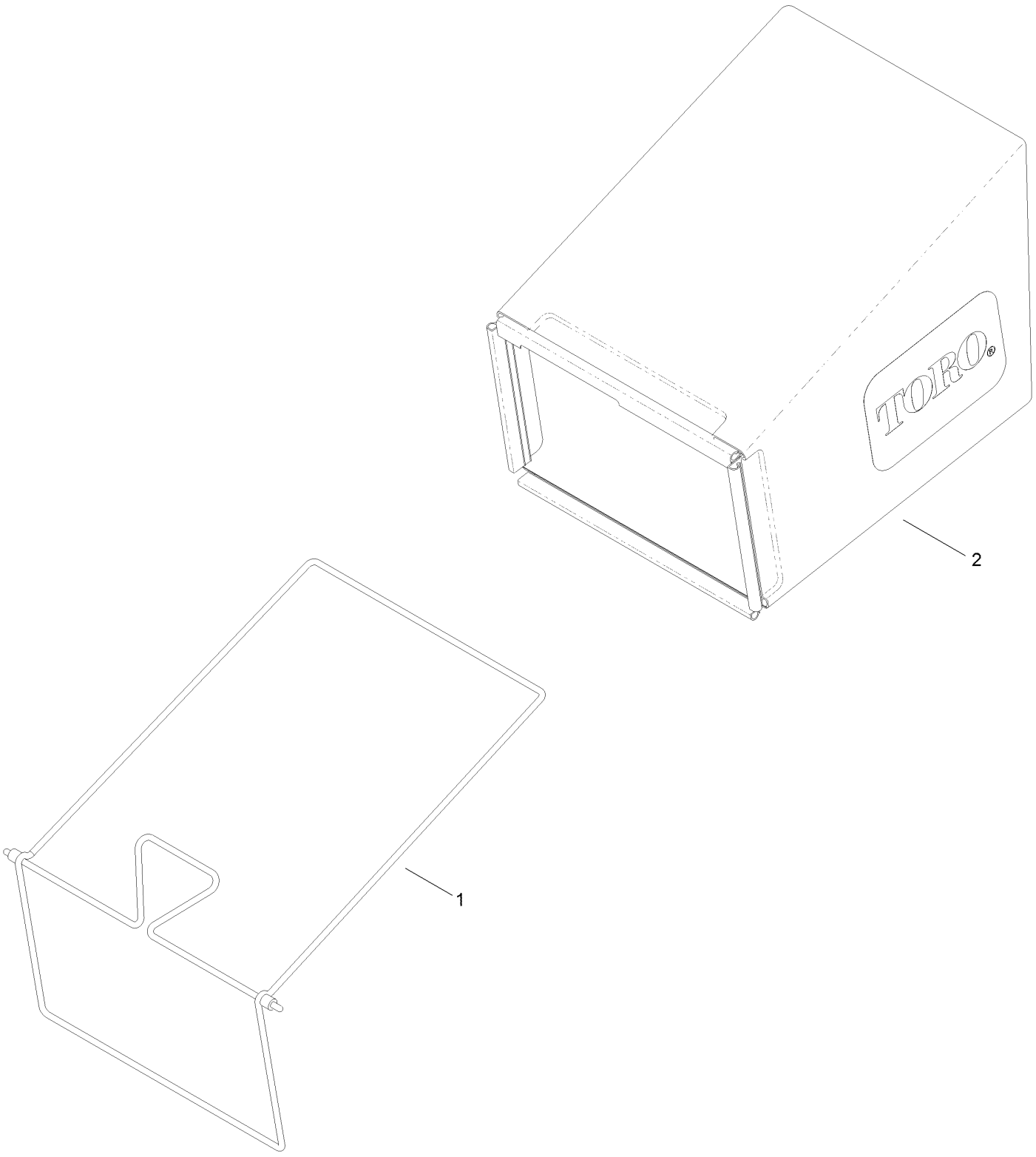

Bag Assembly (continued)

Ref.	*Part Number*	*Qty.*	*Description*
1	121-5766-03	1	Frame-Bag
2	121-5770	1	Bag-Grass

Engine and Belt Assembly

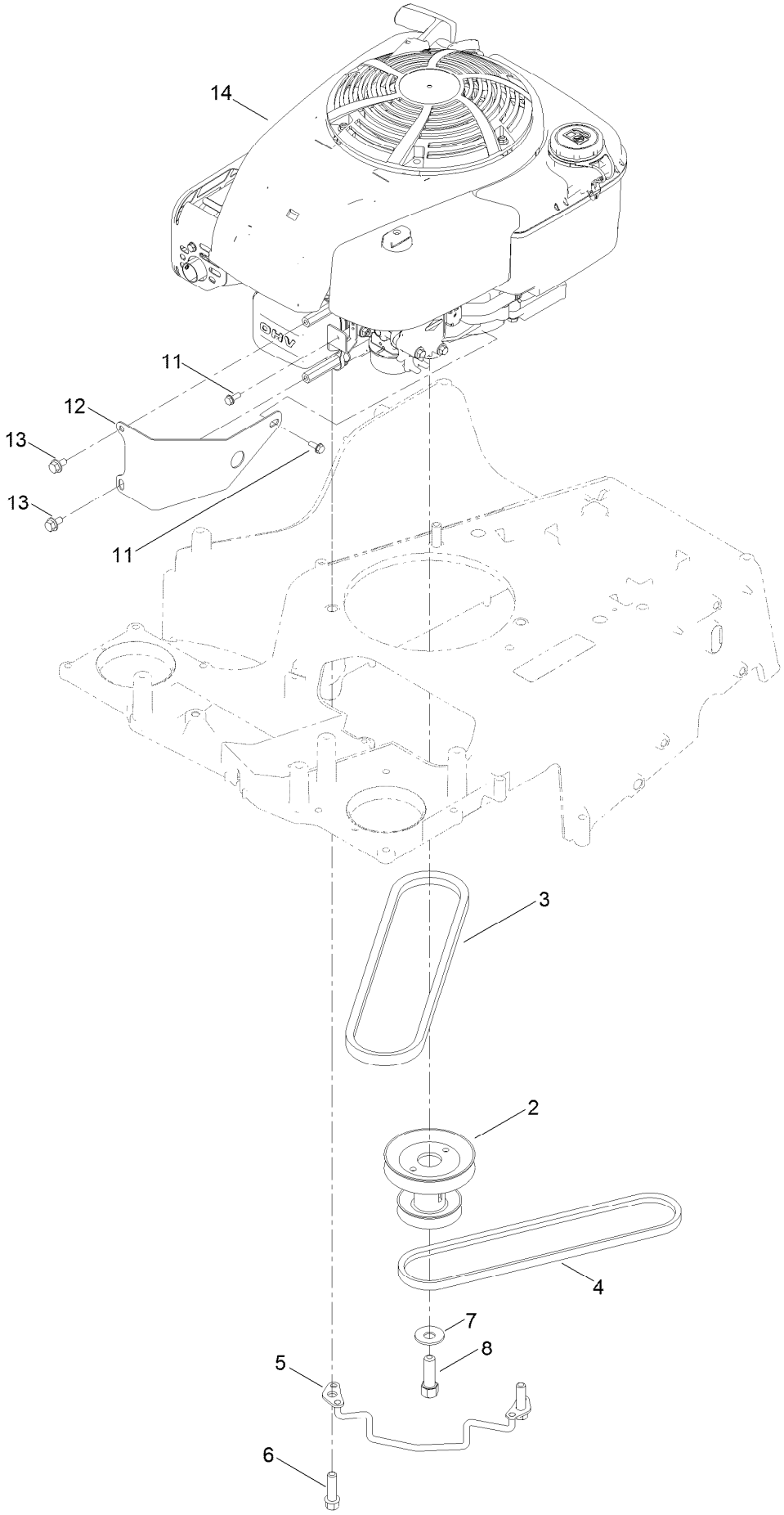

Engine and Belt Assembly (continued)

Ref.	Part Number	Qty.	Description
2	137-9176	1	Pulley-Engine
3	121-5765	1	V-Belt
4	120-9470	1	V-Belt, Traction
5	139-1734	1	Guide-Belt, Wa
6	95-1727	3	Screw-Taptite
7	3290-465	1	Washer-Belleville
8	26-0671	1	Screw-HH
11	139-1713	2	Screw-Taptite
12	131-0889-03	1	Guard-Engine
13	126-2713	2	Screw-HHF
14		1	Engine-Briggs, 14D9320112F1 ●■

● Not serviced separately

■ Obtain parts from www.briggsandstratton.com

Front Wheel and Height-of-Cut Assembly

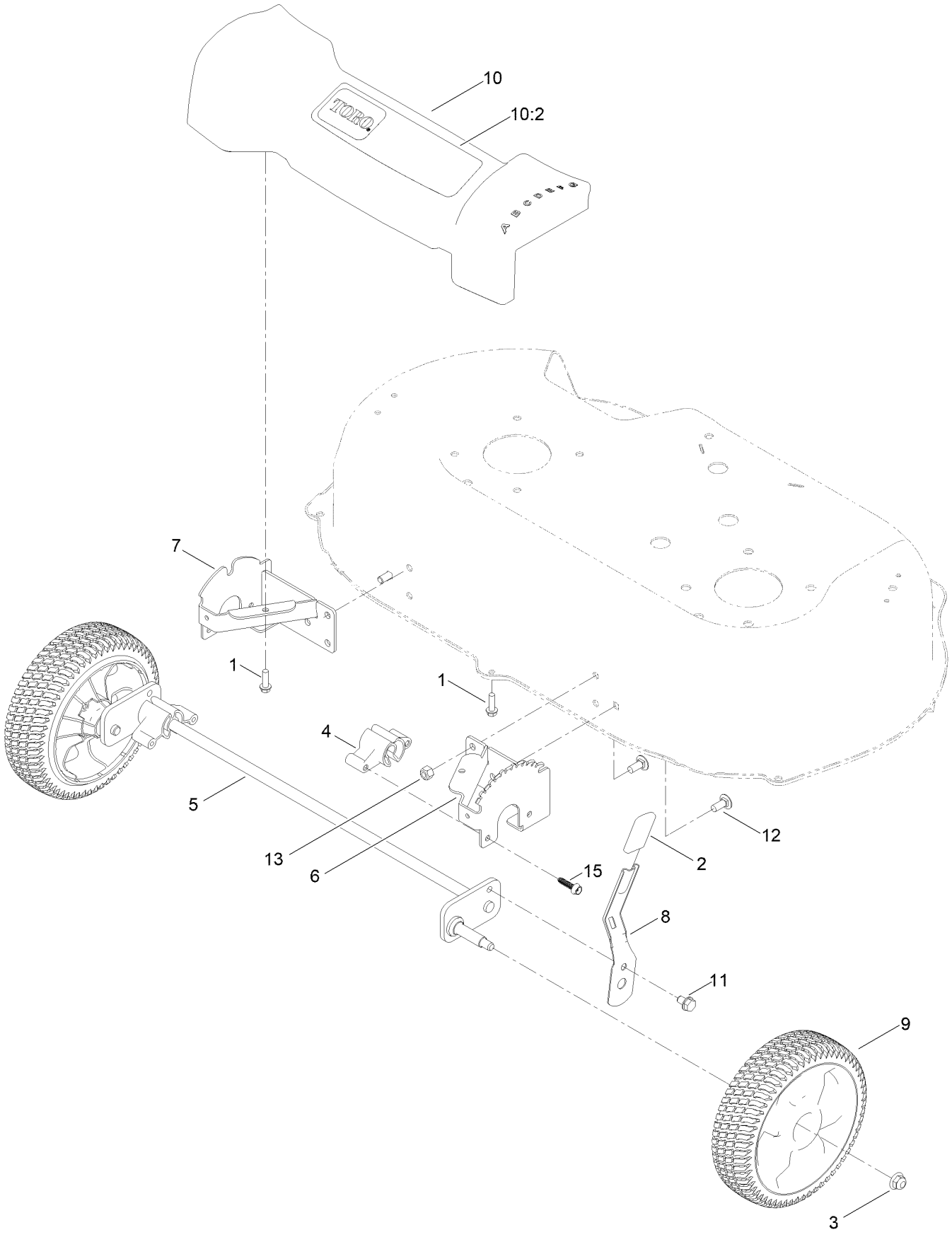

Front Wheel and Height-of-Cut Assembly (continued)

Ref.	Part Number	Qty.	Description
1	137-3099	3	Screw-Plastite, HWH
2	120-9535	1	Grip-Lever
3	119-4042	2	Nut-HF, NI
4	136-5875	2	Bushing-Pivot, Front
5	139-1753	1	Front Axle ASM
6	120-7037-03	1	Plate-HOC, LH
7	120-7038-03	1	Plate-HOC, RH
8	120-7043	1	Arm-Spring
9	125-2510	2	8 Inch Wheel ASM
10	125-5027	1	Front Cover ASM
10:2	121-2392	1	Decal-Cover, Front
11	139-1727	1	Screw-HWH, Thd Roll
12	137-3061	6	Bolt-CARR
13	119-4038	6	Nut-Hex
15	130-6658	4	Screw-Flange, Plastic

Rear Wheel and Height-of-Cut Assembly

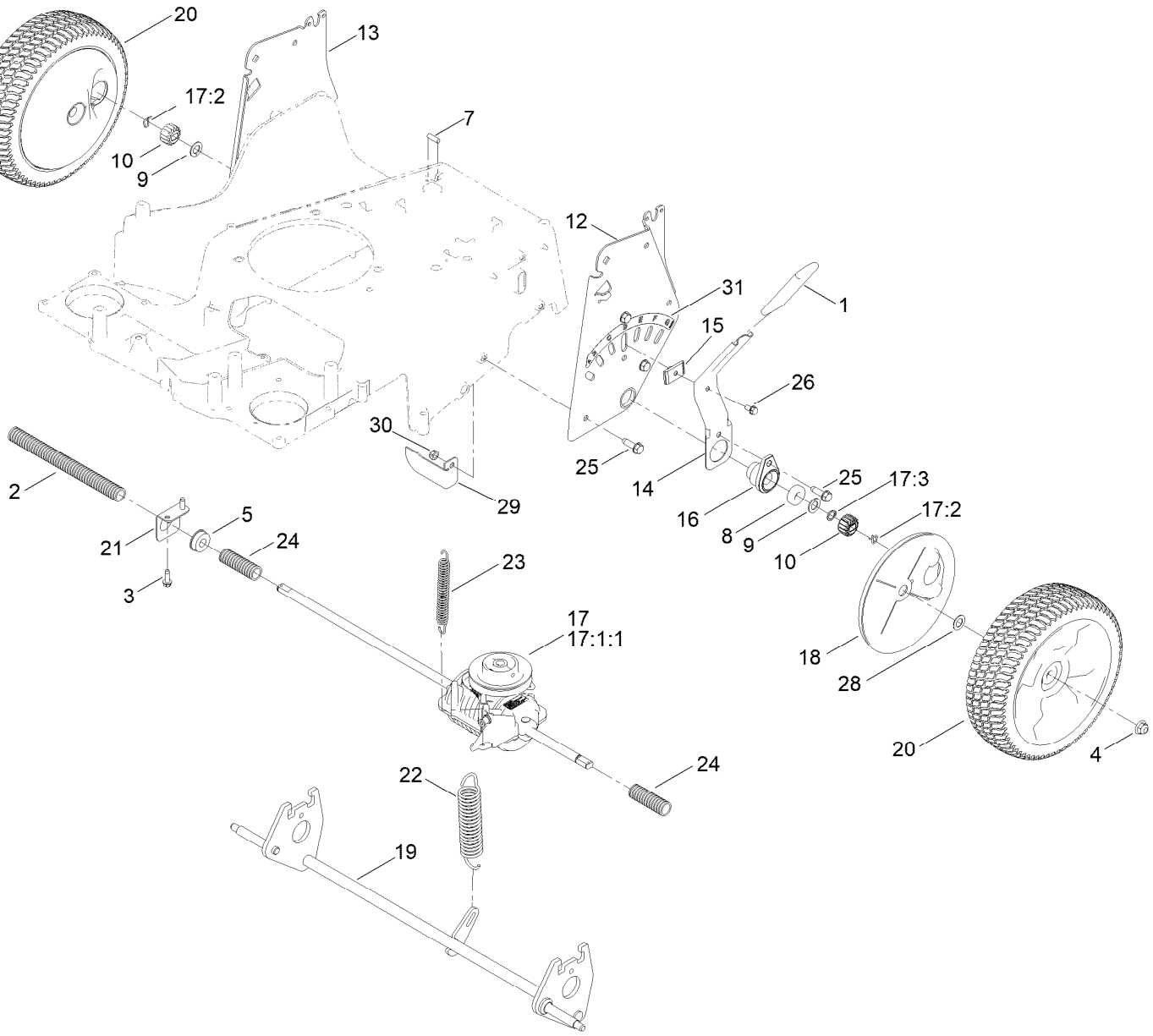

Rear Wheel and Height-of-Cut Assembly (continued)

Ref.	Part Number	Qty.	Description
1	137-4796	1	Grip-Lever, Lift
2	121-5799	1	Conduit-Convoluted
3	49-2040	2	Screw-HWHTF
4	119-4042	2	Nut-HF, NI
5	104-8699	1	Bearing-Ball
7	106-5681	1	Pin-Stop
8	133-2603	2	Bearing-Ball
9	110-7191	2	Washer-Thrust
10	131-5399	2	Gear-Pinion, 15T
12	120-3342-03	1	Plate-HOC, LH
13	120-3343-03	1	Plate-HOC, RH
14	120-5208	1	Arm-Spring, Rear
15	120-5209	1	Key-Arm, Spring
16	136-5929	2	Retainer-Bearing
17	131-9665	1	Transmission Kit
17:1:1	130-2370	1	Transmission Pulley Kit ●
17:2	130-2369	2	Pin-Snap
17:3	32151-61	1	Ring-Retaining
18	120-6233	2	Cover-Gear
19	140-4048	1	Rear Axle ASM
20	125-2509	2	10 Inch Wheel Gear ASM
21	138-3233	1	Mount-Bearing
22	120-7026	1	Spring-Extension
23	120-7027	1	Spring-Extension
24	121-5800	2	Conduit-Convoluted
25	701243	8	Screw-Thd Roll, HWH
26	32144-4	1	Screw-HWH
28	36-4780	2	Washer-Plain
29	138-5338	1	Bracket-Stop
30	137-3089	1	Nut-Hex
31	125-2497	1	Decal-HOC, Rear

● Not illustrated

Handle and Electrical Assembly

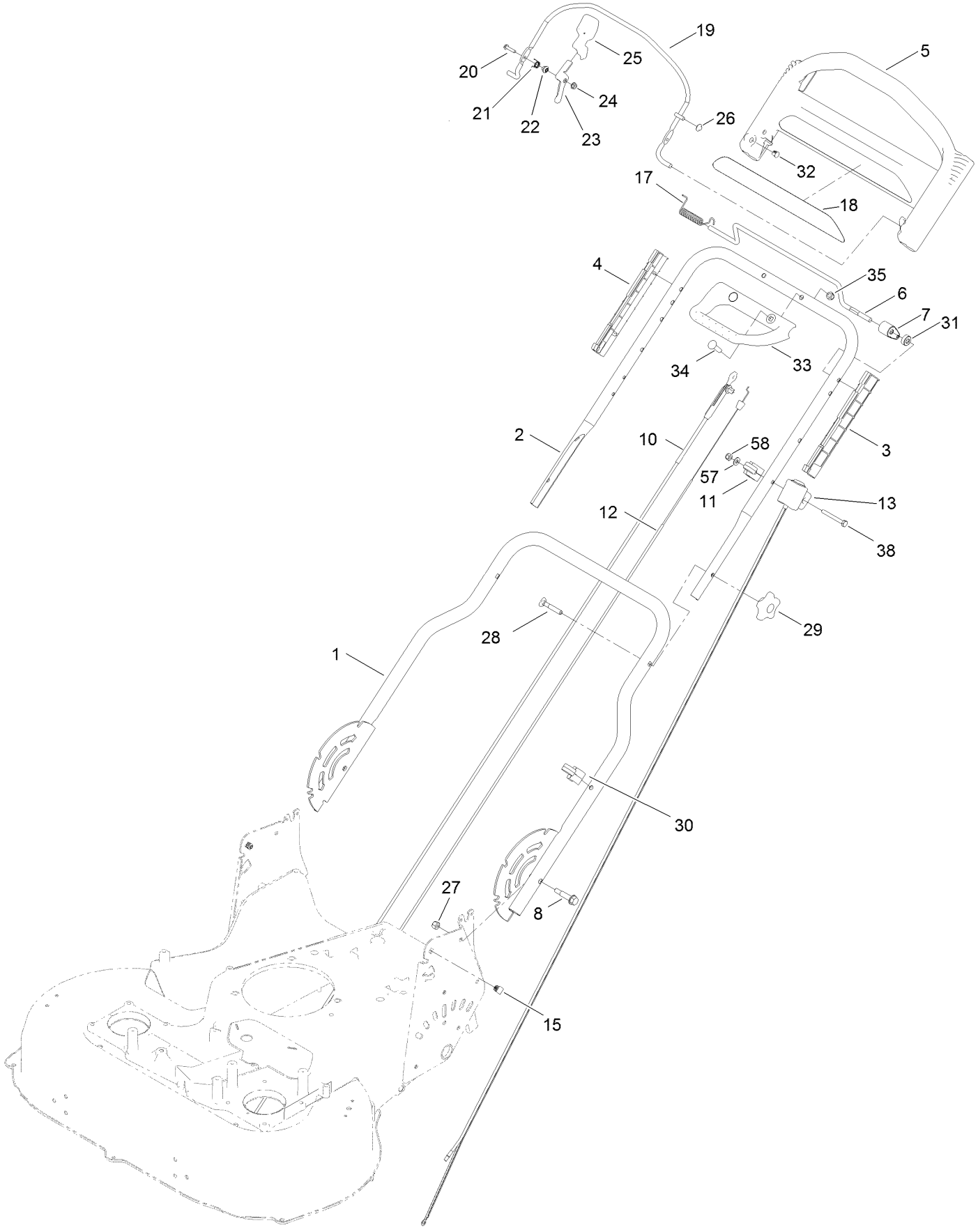

Handle and Electrical Assembly (continued)

Ref.	Part Number	Qty.	Description
1	120-5204-05	1	Handle-Lower
2	132-4484-05	1	Handle-Upper
3	105-6842	1	Guide-LH
4	105-6841	1	Guide-RH
5	104-8678	1	Handle-Control
6	136-7150	1	Bar-Control, Traction
7	127-6842	1	Lever-Traction
8	139-1694	2	Bolt-Shoulder, HHF
10	133-1998	1	Cable-Brake
11	136-5864	1	Anchor-Cable
12	127-6867	1	Cable-Traction
13	117-5975	1	Switch Housing ASM
15	132-4516	2	Plug-Square
17	136-7166	1	Spring-Torsion
18	120-3911	1	Decal-Handle
19	108-3788-03	1	Bail-Brake
20	106-9169	1	Screw-HWH
21	107-7462	1	Spring-Torsion
22	107-7463	1	Spacer
23	138-3220	1	Lever
24	139-1712	1	Nut-Hex Flange
25	112-8884	1	Knob
26	3290-337	1	Nut-Speed
27	119-4038	2	Nut-Hex
28	137-3107	2	Screw-Handle
29	117-5976	2	Knob-Handle
30	114-7988	1	Guide-Cable
31	130-2343	1	Spacer
32	104-9368	1	Plug-Dome
33	131-0847	1	Handle-Assist, Traction
34	139-1702	2	Bolt-Carriage
35	137-4808	2	Nut-Acorn
38	137-3034	1	Screw-HH
57	139-1699	1	Washer-Flat
58	137-3094	1	Nut-Hex
99	614249	2	Tie-Cable ●

● Not illustrated

Attachments and Accessories

For 21810 TimeMaster 76cm Lawn Mower

Product Name	Model/Part
Fuel Stabilizer .05 oz	130-2393
4-Cycle Fuel, Snow And Lawn 32oz Can	131-3823
Toro Premium Fuel Treatment 12 Oz Bottle	131-6572
Oil-30/10W-30 Synthetic (Quart)	138-6053
Hi-Lift Repl Blade Kit Timemaster	20122P
Lawn Striping Kit with 30in Roller	20602
Toro 4-Cycle SAE 30 Oil (32oz Bottle)	38903
Summer Oil-Case of 24 (20oz Bottles)	38916
Bag-Walk Behind (Toro)	490-7318
Mower Cover	490-7461

Notes:

Notes:

Notes:



Count on it.