Form No. 3459-631 Rev A

TORO®

Count on it.

Parts Catalog

Workman® GTX

Electric Utility Vehicle with Extended Chassis

Model No. 07412EX—Serial No. 412200000 and Up

Register at www.Toro.com.
Original Instructions (EN)

3459-631 A

Ordering Replacement Parts

To order replacement parts, please supply the part number, the quantity, and the description of each part desired.

Understanding Reference Numbers

Each identified part in an illustration has a reference number. The reference number for a part also appears in the parts list, along with other information about the part.

This catalog uses two special reference number formats, one to indicate parts in a service assembly and another to indicate the quantity of a given part in an illustration.

Service Assembly Reference Numbers

Parts in service assemblies have reference numbers in the form a:b. The a represents the reference number of the entire service assembly and the b represents a sequential number unique to each part within the service assembly.

For example, a wheel assembly might be identified by reference number 6, the tire by 6:1, the valve by 6:2, and the wheel by 6:3. When you order the assembly identified by reference number 6, you receive all parts identified by reference numbers 6:1,6:2, and 6:3. However, you may also order any part individually. Reference numbers of this type appear in illustration and in parts lists.

Reference Numbers Indicating Quantity

In an illustration, if a reference number indicates more than one part, the reference number has the form nX y. The n represents the quantity of the part, the X is the multiplication symbol, and the y represents the reference number.

For example, in an illustration, the reference number 2X 37 means that two of the parts identified by reference number 37 are indicated.

Contents

Front Frame and Suspension Assembly 4
Floor Plate and Rear Suspension Mount Assembly 5
Rear Frame and Suspension Assembly 6
Frame Mount and Rear Shock/Spring Assembly 7
Brake Assembly 8
Master Cylinder Assembly No. 104-6782 9
Brake Caliper Assembly No. 140-2575 10
Steering Assembly 11
Pedal and Control Assembly 12
Hood and Fender Assembly 13
Dash Assembly 14
Seatbase Assembly 15
Cargo Bed Assembly 16
Battery Assembly 17
Rear Axle and Motor Assembly 18
Transaxle Assembly No. 136-6340 19
Electric Motor Assembly No. 137-6936 20
Controller Assembly 21
Sevcon Controller Assembly No. 137-9898 23
Onboard Charger Assembly No. 131-8490 24
Accelerator Pedal and Key Switch Assembly 25
Attachments and Accessories 26

© 2022—The Toro® Company
8111 Lyndale Avenue South
Bloomington, MN 55420

Contact us at www.Toro.com.
Printed in the USA.
All Rights Reserved

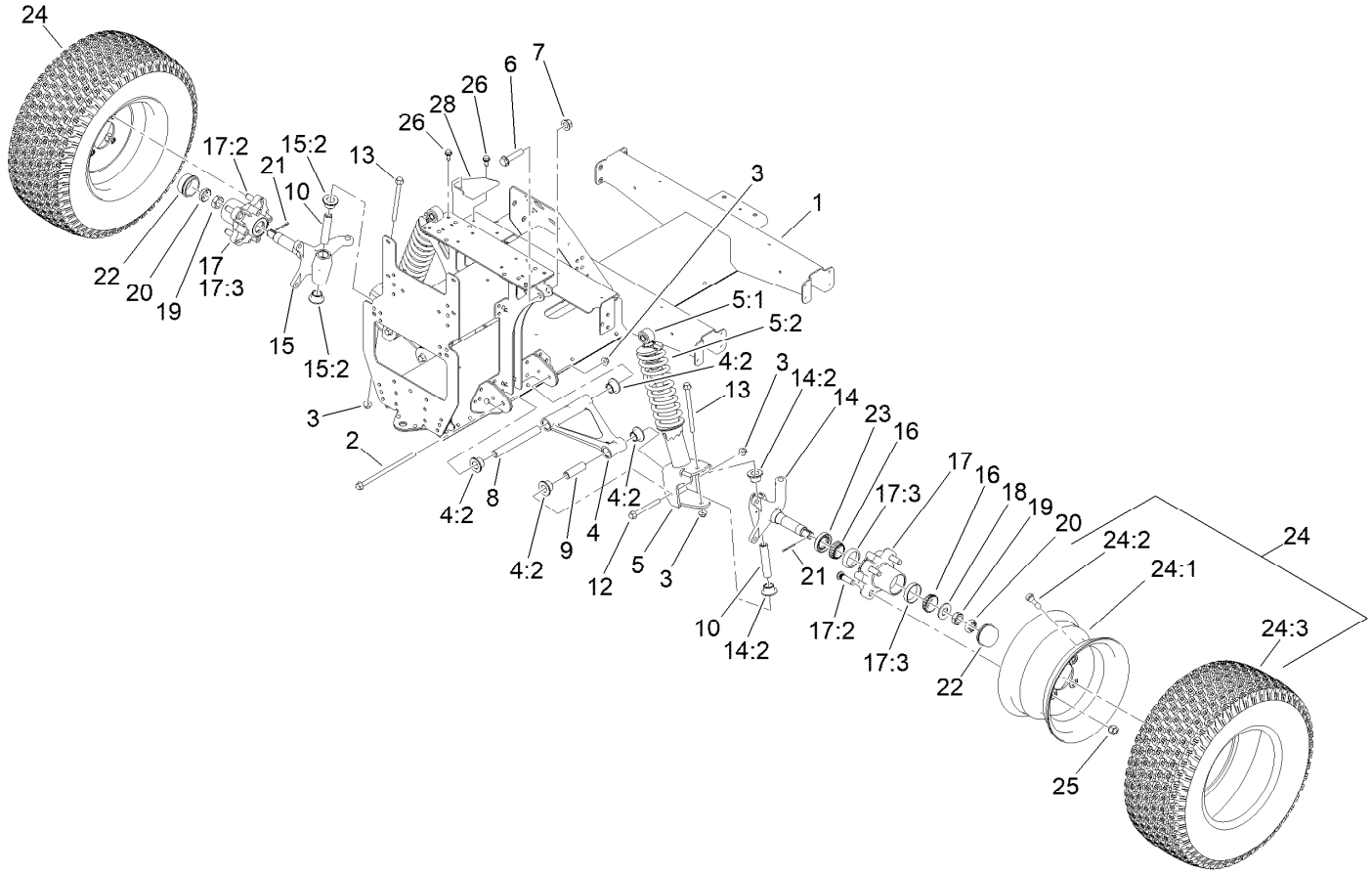

Front Frame and Suspension Assembly

Ref.	Part Number	Qty.	Description
1	127-7718-03	1	Frame-Front
2	139-3360	2	Screw-HF
3	139-3380	6	Nut-HF
4	144-2161	2	Control Arm ASM
4:2	140-4615	4	Bushing-Flange
5	139-4484	2	Strut ASM, 250 Lb (16.33" EXT Length)
5:1	131-8574	1	Isolator-Shock
5:2	137-6719	1	Spring-Compression, 250Lb
6	3234-46	2	Screw-HHF
7	99-5107	2	Nut-Lock
8	131-8581	2	Sleeve-Control Arm, Inner
9	131-8583	2	Sleeve-Control Arm, Outer
10	131-8582	2	Sleeve-Kingpin
12	139-3370	2	Screw-HF
13	139-3350	2	Screw-HF
14	144-5468	1	Spindle ASM LH
14:2	140-4615	2	Bushing-Flange
15	144-5469	1	Spindle ASM RH

Ref.	Part Number	Qty.	Description
15:2	140-4615	2	Bushing-Flange
16	254-94	4	Bearing-Cone, Tapered
17	127-8851	2	Front Hub ASM
17:2	10-6830	4	Stud-Type, Drive
17:3	254-72	2	Bearing-Cup, Tapered
18	93-0309	2	Washer-Tab
19	3220-7	2	Nut-Jam
20	93-0307	2	Nut-Lock, Retainer
21	3272-12	2	Pin-Cotter
22	241-119	2	Cap-Dust
23	112-1690	2	Seal-Oil
24	139-4495	2	Wheel And Tire ASM
24:1	131-8317	1	Wheel
24:2	232-27	1	Stem-Valve
24:3	139-4475	1	Tire-20 X 8.00-10
25	242-50	8	Nut-Lug
26	32144-70	2	Screw-HWHTF
28	131-8339-03	1	Reinforcement-Tower

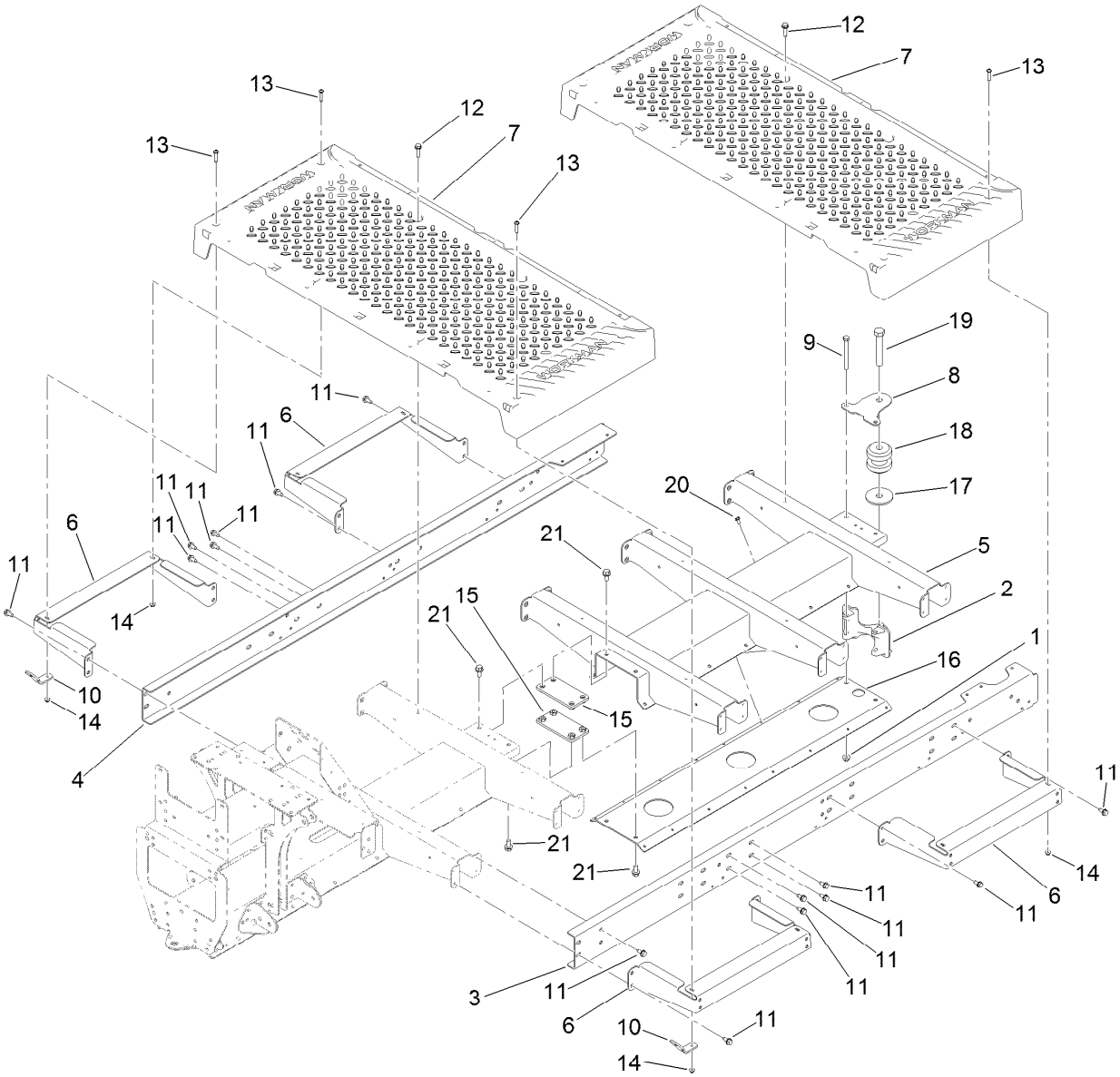

Floor Plate and Rear Suspension Mount Assembly

Ref.	Part Number	Qty.	Description
1	104-8301	2	Nut-HF, NI
2	131-8466	1	Mount-Suspension, Rear
3	127-7823-03	1	Channel-Extended, LH
4	127-7824-03	1	Channel-Extended, RH
5	127-7828-03	1	Channel-Extension
6	127-7837-03	4	Bracket-Support, Floor Plate
7	127-7829	2	Plate-Floor
8	131-8597	1	Plate-Gimbal, Upper
9	323-42	2	Screw-HH
10	127-7832	2	Bracket-Angle
11	32144-70	40	Screw-HWHTF

Ref.	Part Number	Qty.	Description
12	32144-49	8	Screw-HWHTF
13	132-6777	8	Screw-Twh Thd Roll
14	104-7201	8	Nut-HF, NI
15	131-8424	2	Plate-Connection
16	127-7827-03	1	Plate-Channel, Extension
17	110-4549	1	Washer-Snubbing
18	131-8480	1	Isolator
19	104-5877	1	Screw-HH
20	32144-4	16	Screw-HWH
21	3234-1	8	Screw-HHF

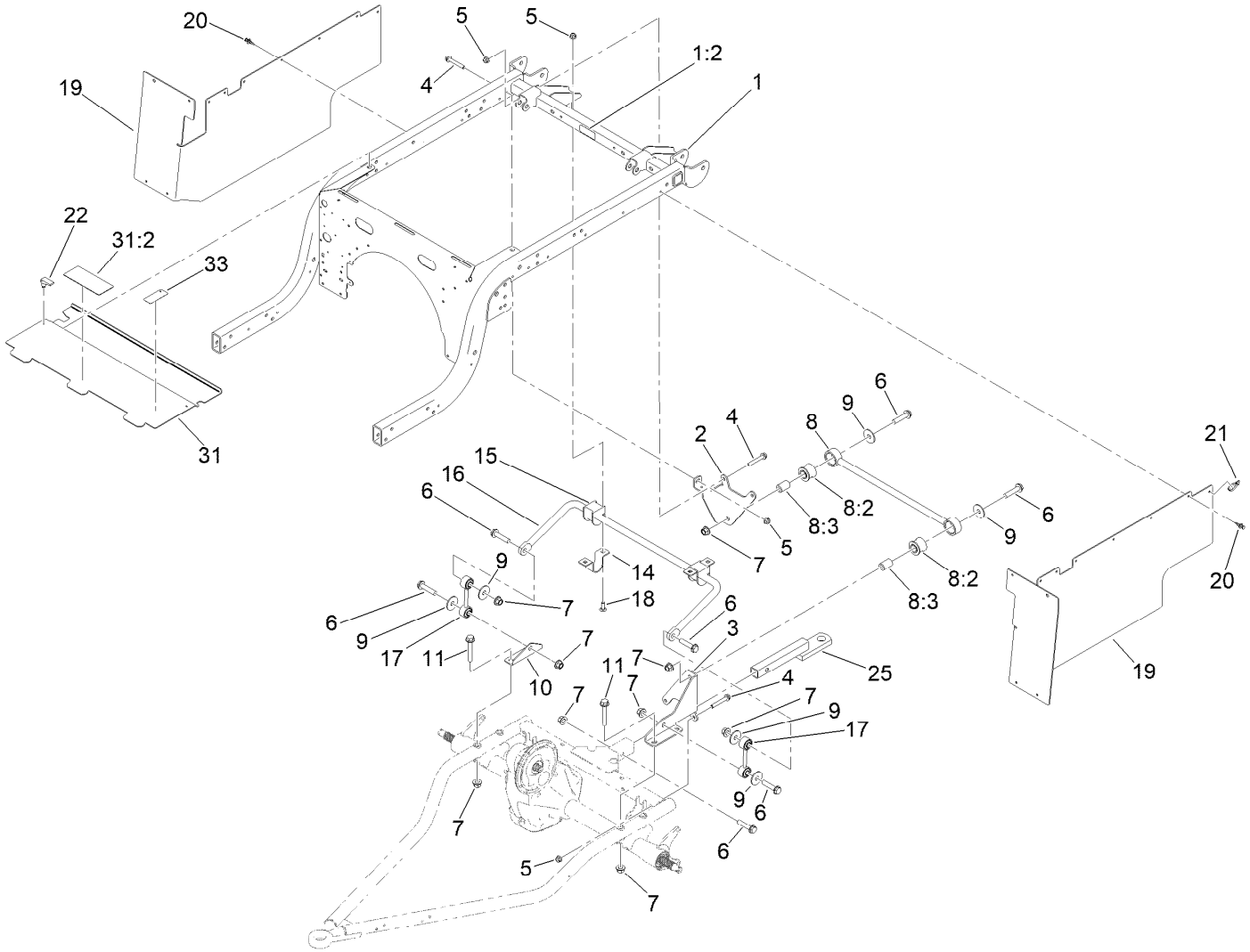

Rear Frame and Suspension Assembly

Ref.	Part Number	Qty.	Description
1	140-2498	1	Rear Frame ASM
1:2	115-2047	1	Decal-Surface, Hot
2	139-4647-03	1	Bracket-Stabilizer Bar
3	127-7411-03	1	Bracket-Bar, Stabilizer
4	3234-39	5	Screw-HHF
5	104-8301	9	Nut-HF, NI
6	3234-46	7	Screw-HHF
7	99-5107	11	Nut-Lock
8	109-5013	1	Panhard Rod ASM
8:2	109-5009	2	Bushing-Suspension, Rubber
8:3	109-5010	2	Spacer
9	86-1990	6	Washer-Thrust
10	131-8315	1	Bracket-Link, Sway Bar

Ref.	Part Number	Qty.	Description
11	3234-40	4	Screw-HF
14	139-4644	2	Clamp, Anti-Sway Bar
15	87-3910	2	Bushing-Rubber
16	131-8310-03	1	Bar-Sway, Anti
17	131-8394	2	Link-Bar, Sway
18	3231-22	4	Screw-CARR
19	131-8346	2	Panel-Side
20	125-9622	20	Rivet-Blind
21	3290-378	2	Tie-Cable
22	74-5950	2	Latch-Swell
25	137-6741	1	Ball Mount ASM
31	140-4573	1	Extended Panel-Cover
31:2	99-7345	1	Decal-Warning
33	145-8016	1	Decal-Gtx Electric

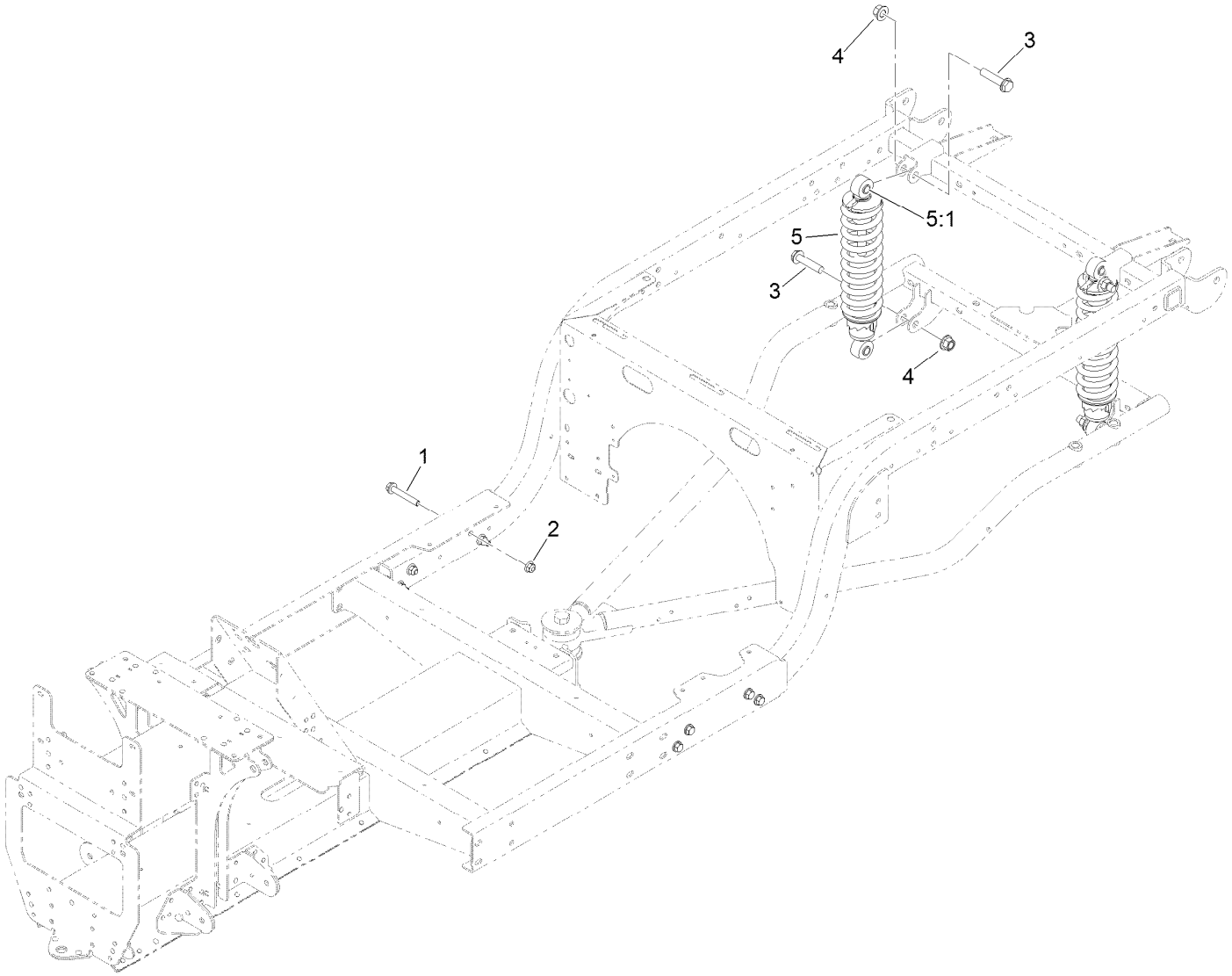

Frame Mount and Rear Shock/Spring Assembly

Ref.	*Part Number*	*Qty.*	*Description*
1	3234-39	8	Screw-HHF
2	104-8301	8	Nut-HF, NI
3	3234-46	4	Screw-HHF
4	99-5107	4	Nut-Lock
5	139-4607	2	Shock/Spring ASM
5:1	131-8574	2	Isolator-Shock

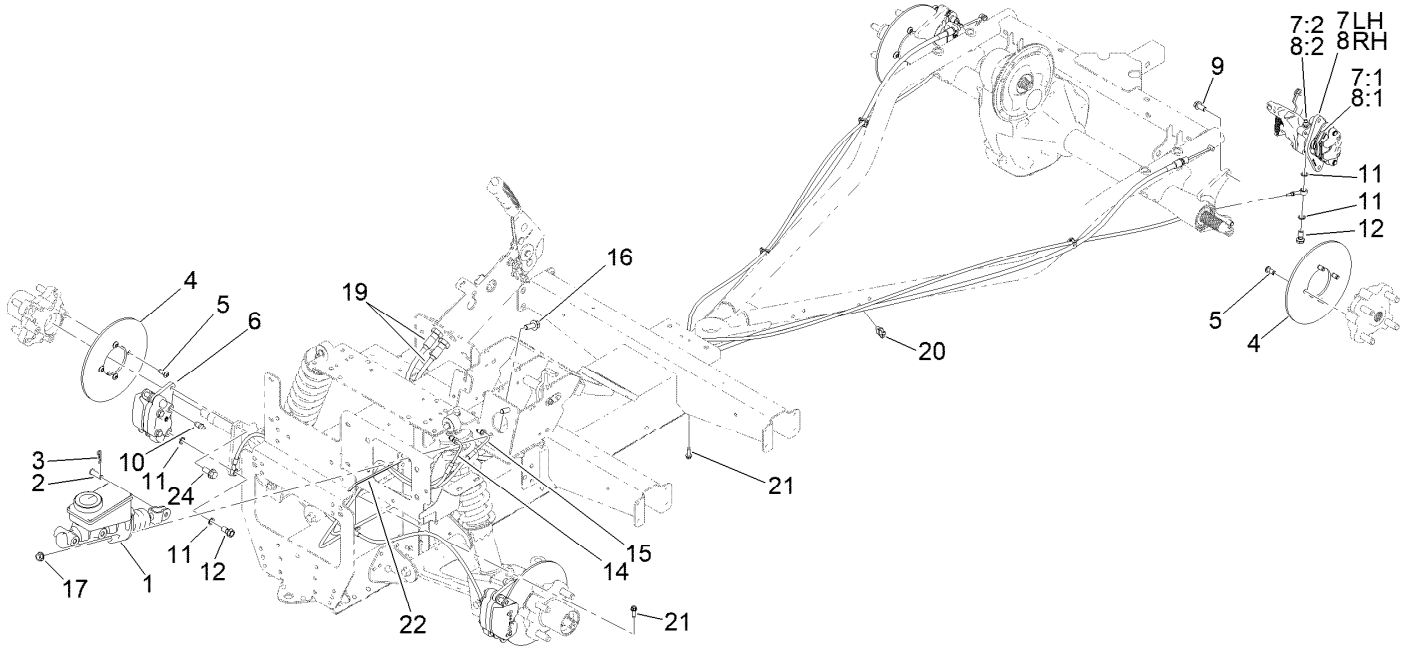

Brake Assembly

Ref.	Part Number	Qty.	Description
1	104-6782	1	Master Cylinder ASM
2	283-2	1	Pin-Clevis
3	1-806003	1	Pin-Cotter
4	139-4474	4	Rotor-Brake
5	121-9671	16	Screw-HSBH
6	140-2575	2	Brake Caliper ASM
7	140-2585	1	Brake Caliper ASM, LH
7:1	140-2595	1	Brake Pad Service Kit (Rear, Qty 4)
7:2	119-9509	1	Screw-Bleed
7:3	136-6328	2	Spring-Rattle, Anti ●
8	140-2590	1	Brake Caliper ASM, RH
8:1	140-2595	1	Brake Pad Service Kit (Rear, Qty 4)
8:2	119-9509	1	Screw-Bleed
8:3	136-6328	2	Spring-Rattle, Anti ●
9	144-5550	4	Screw-Spl
10	119-9509	2	Screw-Bleed
11	115-2341	8	Washer-Banjo
12	120-4875	4	Bolt-Flange, Banjo
14	127-7781	1	Brake Line-Front
15	127-7782	1	Brake Line-Rear
16	3234-11	2	Screw-HHF
17	3290-357	2	Nut-HSF
19	131-8398	2	Cable-Brake, Park
20	32180-030	4	Clip-Tie
21	49-2040	2	Screw-HWHTF
22	3290-378	1	Tie-Cable
24	3234-25	4	Screw-HHF

● Not illustrated

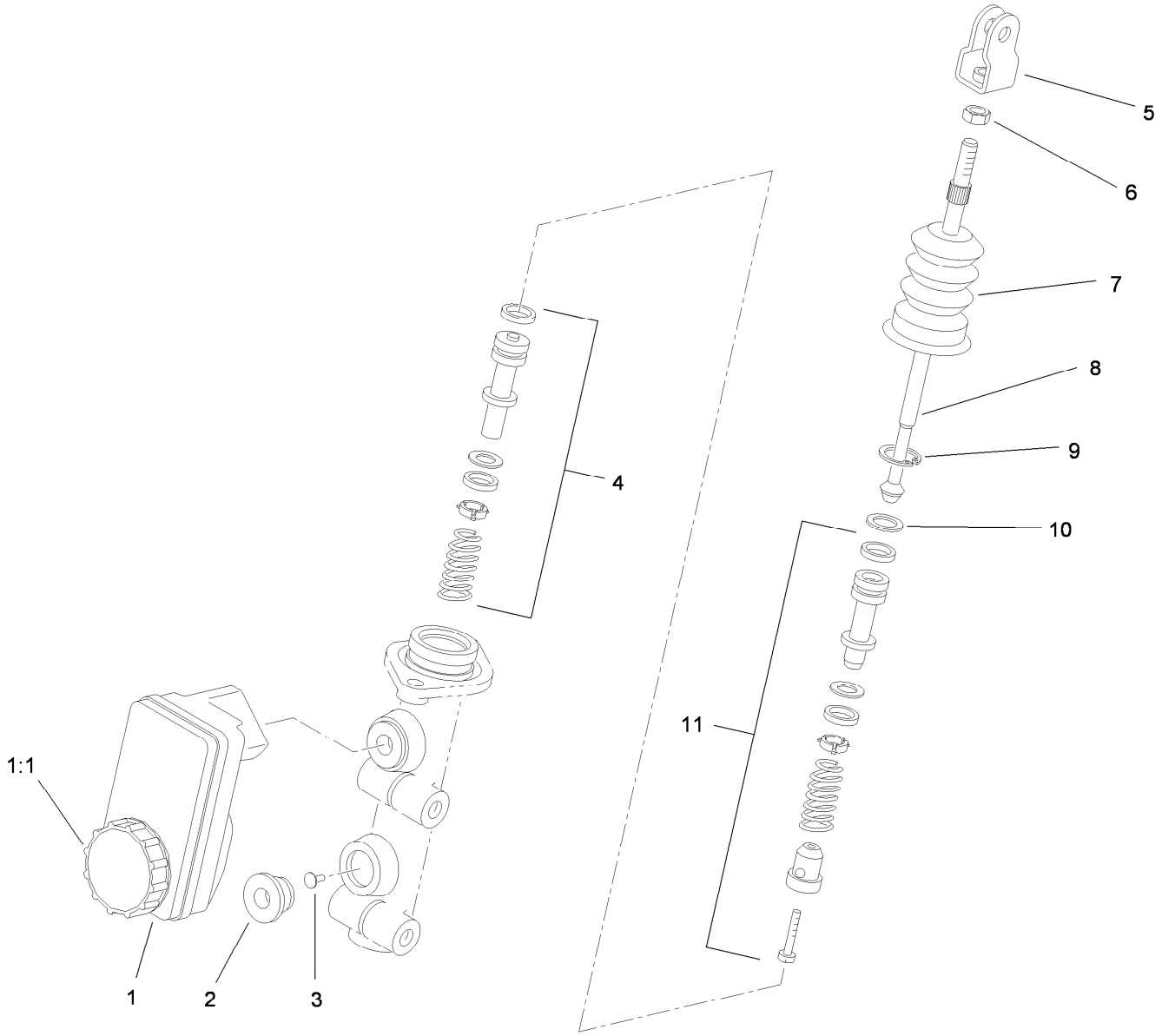

Master Cylinder Assembly No. 104-6782

Ref.	*Part Number*	*Qty.*	*Description*
1	104-6845	1	Reservoir ASM
1:1	92-4112	1	Cap ASM
2	93-8971	2	Seal-Port, Flange
3	92-4103	1	Pin-Stop
4	92-4102	1	Secondary Piston ASM
5	92-4110	1	Clevis
6	21-0360	1	Nut-Hex
7	94-5209	1	Cover-Dust
8	94-5210	1	Rod-Push
9	92-4109	1	Ring-Snap
10	92-4108	1	Retainer-Washer
11	92-4101	1	Primary Piston ASM

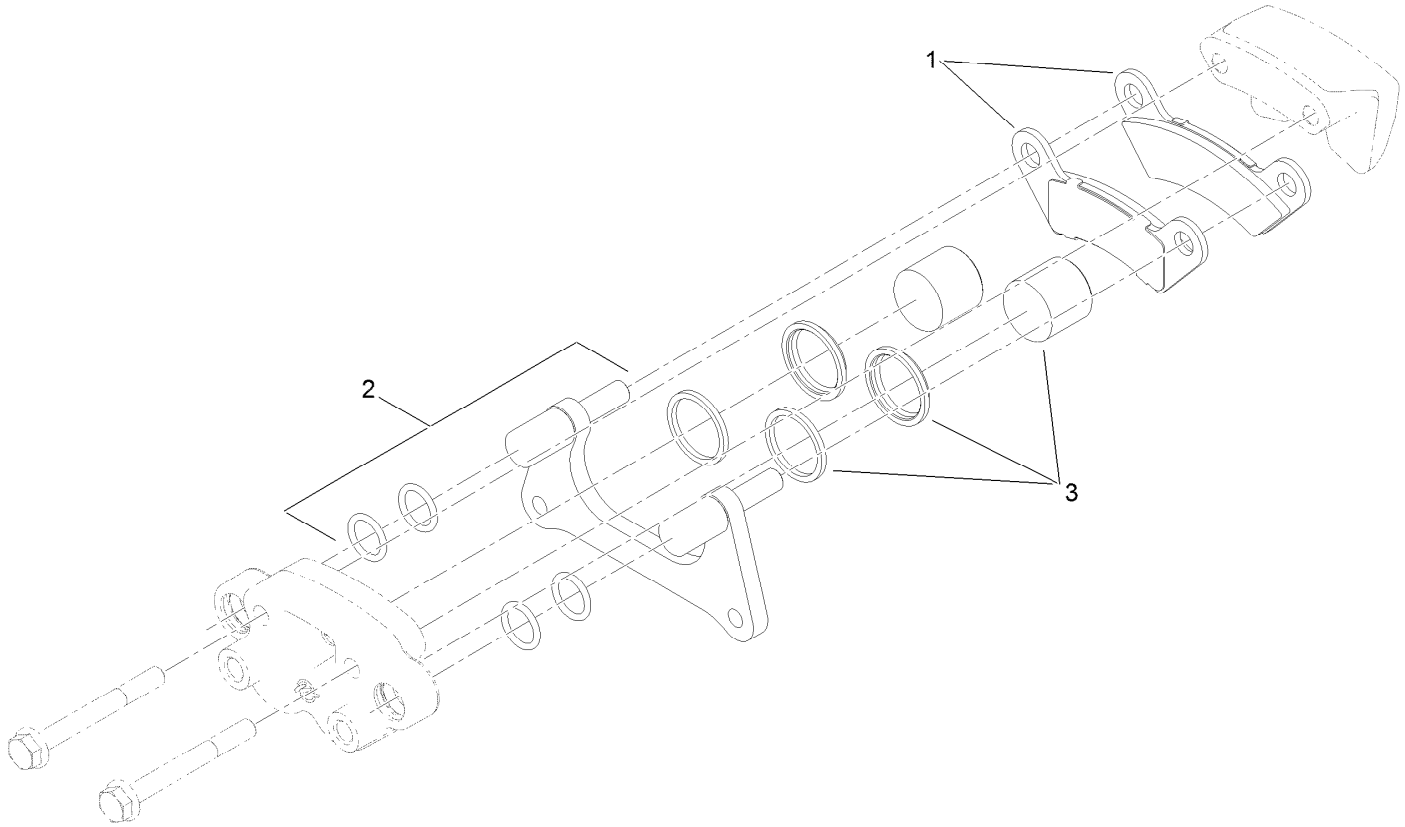

Brake Caliper Assembly No. 140-2575

Ref.	*Part Number*	*Qty.*	*Description*
1	140-2580	1	Brake Pad Service Kit (Front, Qty 4)
2	119-9511	1	Bracket Kit
3	133-0614	1	Piston Kit

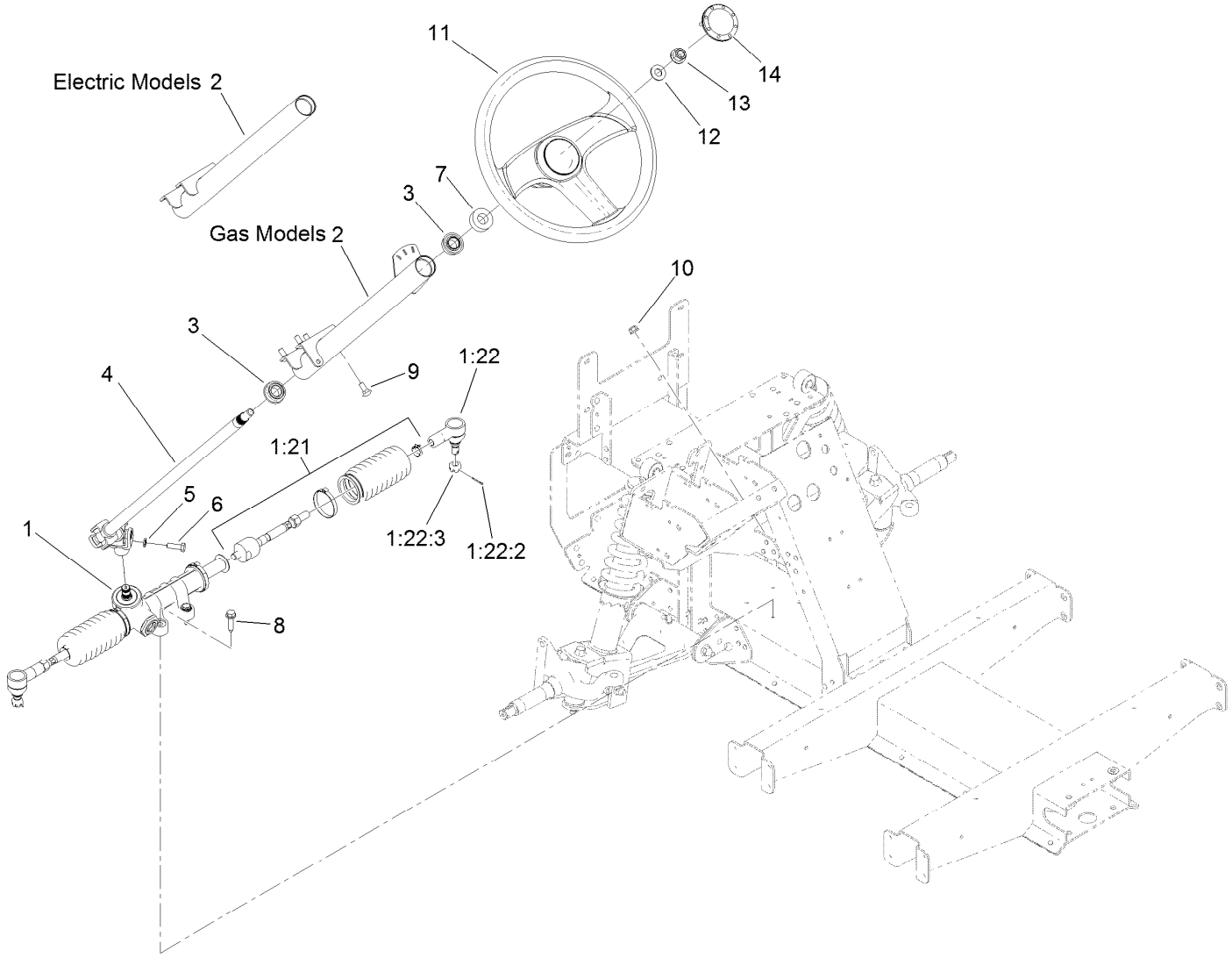

Steering Assembly

Ref.	Part Number	Qty.	Description
1	138-0114	1	Steering Rack ASM
1:21	140-4591	1	Kit-Tie Rod ASM, Gtx
1:22	140-4592	1	Kit-Rod End ASM
1:22:2	3272-42	1	Pin-Cotter
1:22:3	140-2493	1	Nut-Hex, Slotted
2	139-3343	1	Steering Column ASM
3	112-3262	2	Bearing
4	127-8804	1	Shaft-Steering
5	3253-4	1	Washer-Lock

Ref.	Part Number	Qty.	Description
6	116-3515	1	Screw-HH, Special
7	21-9260	1	Cover-Dust
8	32144-49	4	Screw-HWHTF
9	3230-1	4	Bolt-CARR
10	104-8300	4	Nut-HF, NI
11	131-0957	1	Wheel-Steering
12	3256-26	1	Washer-Flat
13	99-5107	1	Nut-Lock
14	131-3630	1	Cap-Wheel, Steering

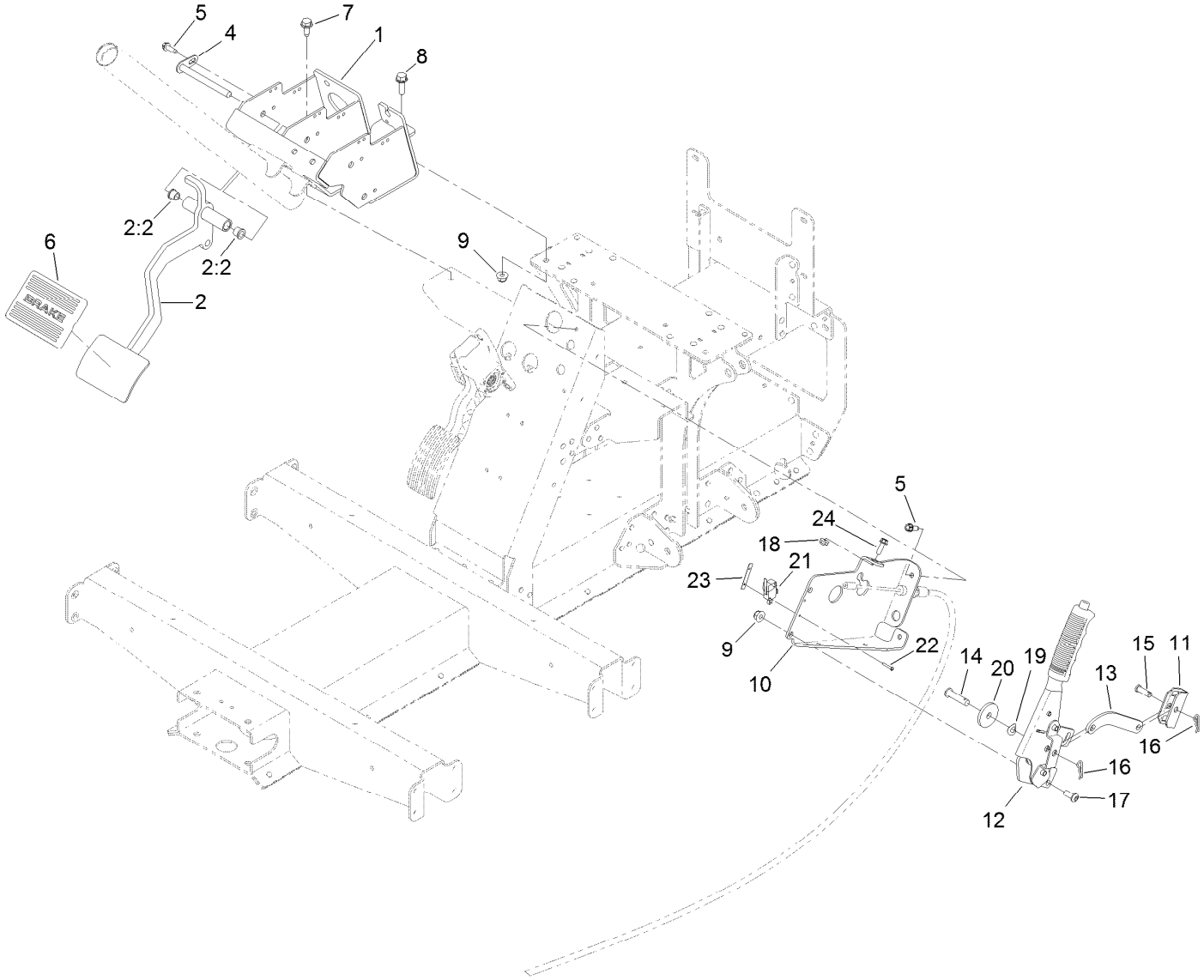

Pedal and Control Assembly

Ref.	Part Number	Qty.	Description
1	127-8817-03	1	Mount-Pedal
2	138-9385	1	Brake Pedal ASM
2:2	256-116	2	Bushing-Flange
4	131-8459	1	Shaft-Pivot
5	49-2040	3	Screw-HWHTF
6	7-3900	1	Pad-Brake
7	32144-70	2	Screw-HWHTF
8	3234-29	1	Screw-HHF
9	104-8300	3	Nut-HF, NI
10	140-4836-03	1	Mount-Park Brake
11	87-3480	1	Bracket-Equalizer, Cable
12	131-8320	1	Lever-Brake, Park

Ref.	Part Number	Qty.	Description
13	144-0516	1	Link-Park, Brake
14	283-10	1	Pin-Clevis
15	1-808280	1	Pin-Clevis
16	1-806003	2	Pin-Cotter
17	3274-55	2	Screw-HSBH
18	104-7201	1	Nut-HF, NI
19	121-4605	1	Washer-Spring
20	131-8496	1	Washer-Plain
21	108-6496	1	Switch (W/Boot)
22	3290-313	2	Screw-SPH
23	3290-354	1	Nut-Speed
24	115-5103	1	Screw-HHF

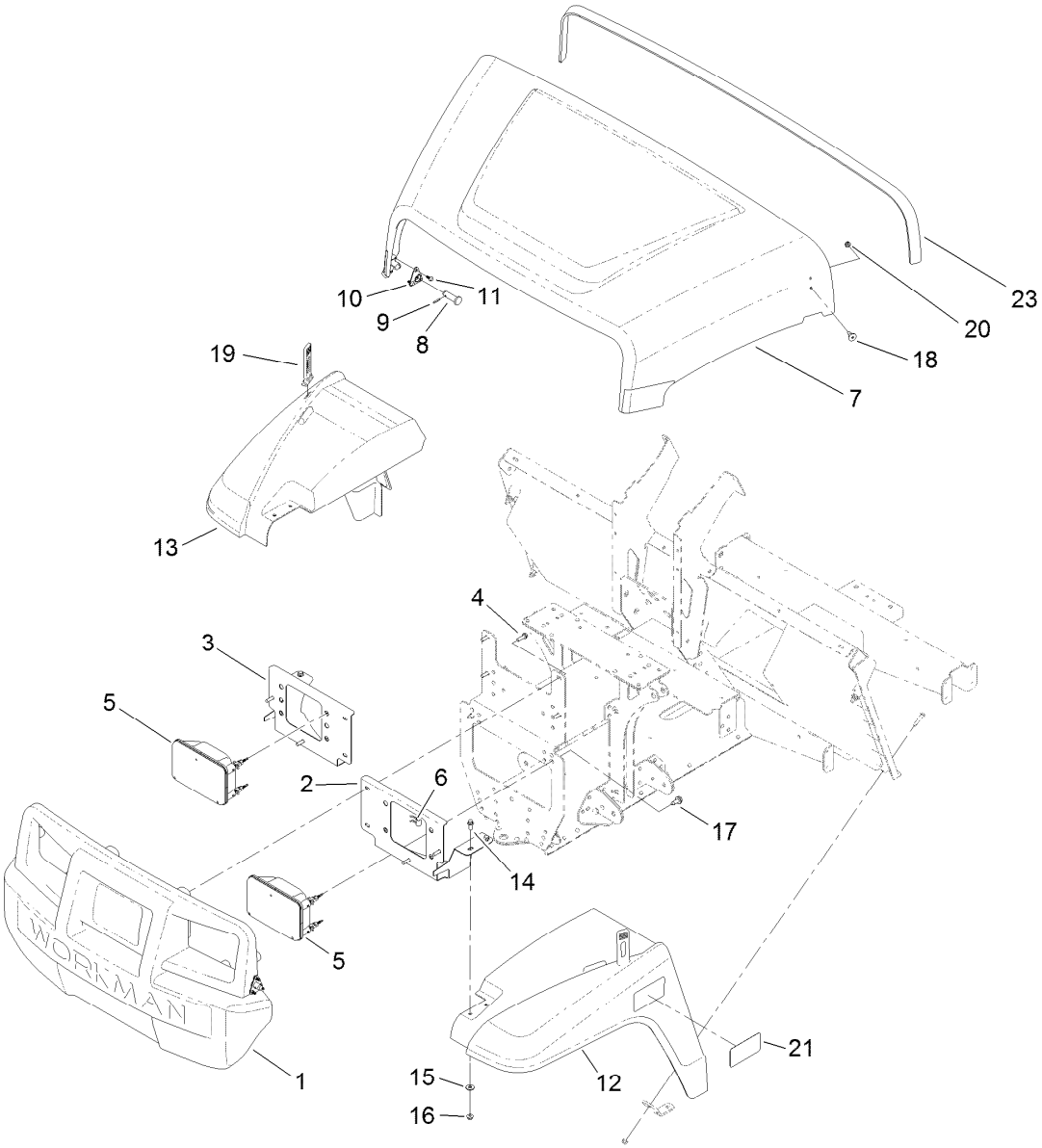

Hood and Fender Assembly

Ref.	Part Number	Qty.	Description
1	132-8530	1	Bumper
2	131-8455-03	1	Bracket-Headlight, LH
3	131-8456-03	1	Bracket-Headlight, RH
4	46-8091	8	Screw-HWH
5	138-9260	2	Headlight ASM
6	115-2408	6	Clip-Speed
7	136-6281	1	Hood
8	117-5094	2	Pin-Clevis
9	32121-50	2	Pin-Spring
10	112-3308	2	Retainer-Pin
11	121-9605	6	Screw-HWH

Ref.	Part Number	Qty.	Description
12	127-7771	1	Fender-Front, LH
13	127-7772	1	Fender-Front, RH
14	3234-33	4	Screw-HHF
15	3256-2	4	Washer-Flat
16	104-7201	4	Nut-HF, NI
17	32144-70	2	Screw-HWHTF
18	125-1122	2	Screw
19	131-8402	2	Strap-Down, Hold
20	3296-56	2	Nut-Lock, NI
21	131-8516	2	Decal-Fender
23	133-7210	1	Seal-Trim, Hood

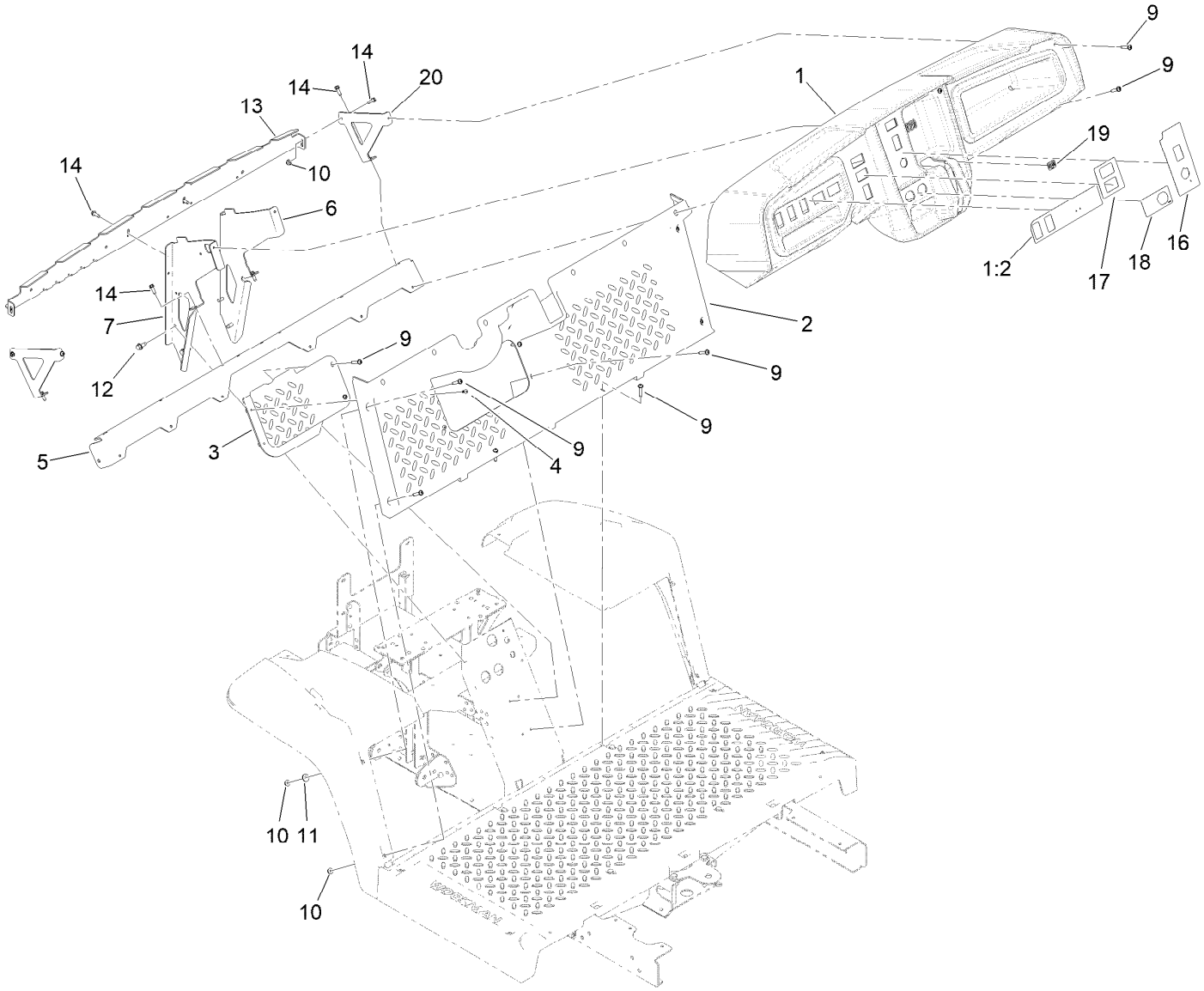

Dash Assembly

Ref.	Part Number	Qty.	Description
1	145-2099	1	Dash-Gtx
1:2	145-2261	1	Decal-Dashboard, Gtx
2	127-7846	1	Footboard
3	127-7847	1	Cover-Footboard
4	107-7461	2	Screw-Plastite
5	127-7831-03	1	Angle
6	131-8336-03	1	Bracket-Dash, RH
7	145-2094-03	1	Bracket-Dash, LH
9	132-6777	20	Screw-Twh Thd Roll
10	104-7201	6	Nut-HF, NI
11	3256-2	2	Washer-Flat
12	32144-70	4	Screw-HWHTF
13	131-8568-03	1	Reinforcement-Dash
14	49-2040	8	Screw-HWHTF
16	145-2263	1	Decal-Control Panel, Electric
17	145-2264	1	Decal-Dash Center, Electric
18	131-8493	1	Decal-USB
19	131-8506	1	Decal-Status, Machine
20	131-8569-03	2	Bracket-Dash, Side

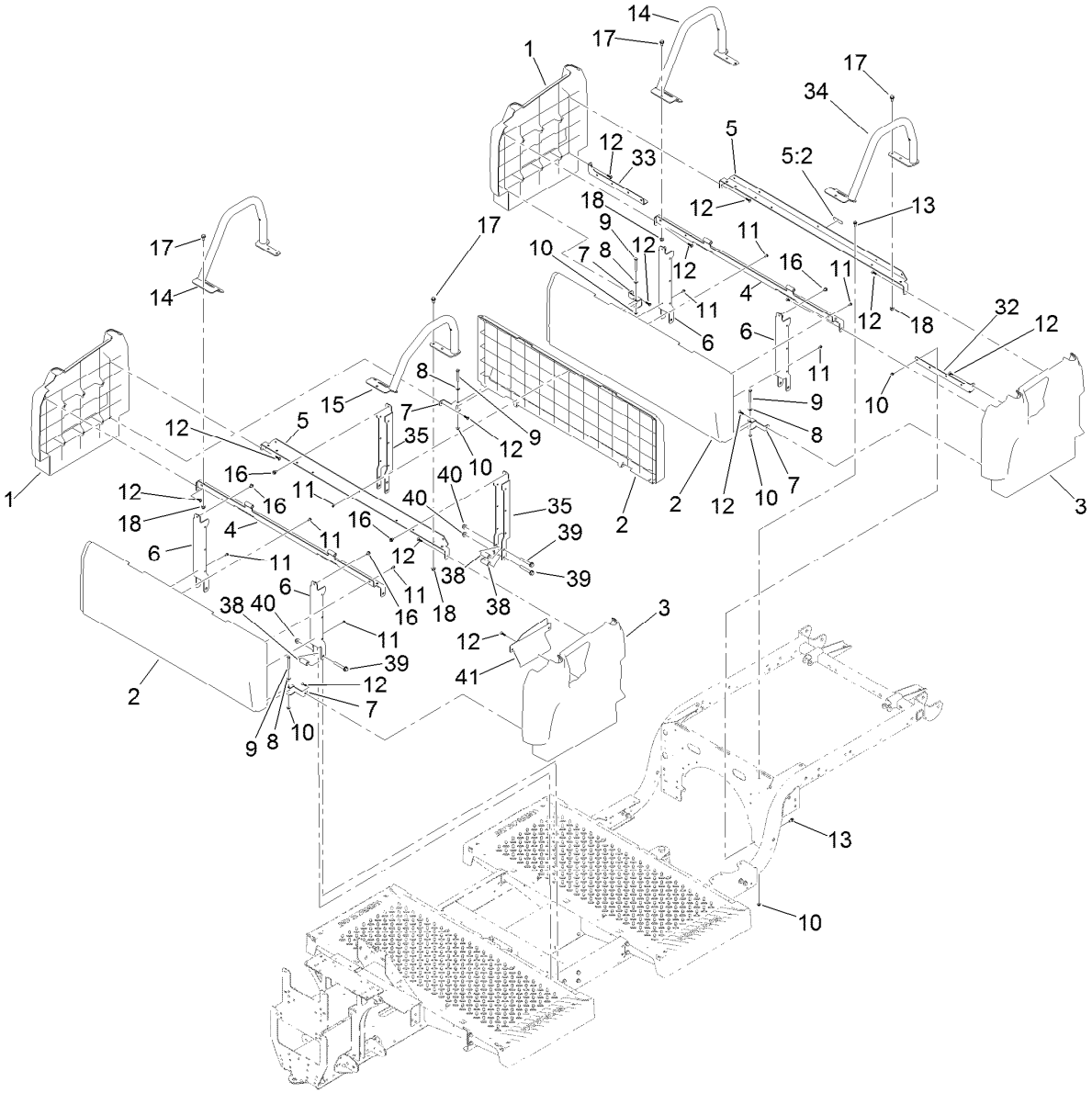

Seatbase Assembly

Ref.	Part Number	Qty.	Description
1	127-7805	2	Side-Base, Seat (RH)
2	133-7188	3	Panel-Base, Seat
3	127-7807	2	Side-Base, Seat (LH)
4	133-7345-03	2	Support-Seat
5	137-6991	1	Seat Support ASM
5:2	120-9570	1	Decal-Warning
6	127-7841-03	4	Channel-Support, Seat
7	127-7844-03	6	Clamp-Plate, Floor
8	3256-22	6	Washer-Flat
9	321-18	6	Screw-HH
10	104-7201	12	Nut-HF, NI
11	112-6349	13	Screw-HWH
12	120-2349	19	Screw
13	3234-33	6	Screw-HHF

Ref.	Part Number	Qty.	Description
14	131-8352-05	2	Restraint-Hip, RH
15	131-8353-05	1	Restraint-Hip, LH
16	46-6810	6	Screw And Washer ASM
17	32144-70	12	Screw-HWHTF
18	104-8300	12	Nut-HF, NI
32	127-7842-03	1	Bracket-Support, Side (LH)
33	127-7843-03	1	Bracket-Support, Side (RH)
34	131-8354-05	1	Restraint-Hip, LH
35	131-8355-03	2	Channel-Support, Seat
38	131-8452	6	Spacer
39	3234-39	6	Screw-HHF
40	104-8301	6	Nut-HF, NI
41	131-8525-05	1	Cover-Opening

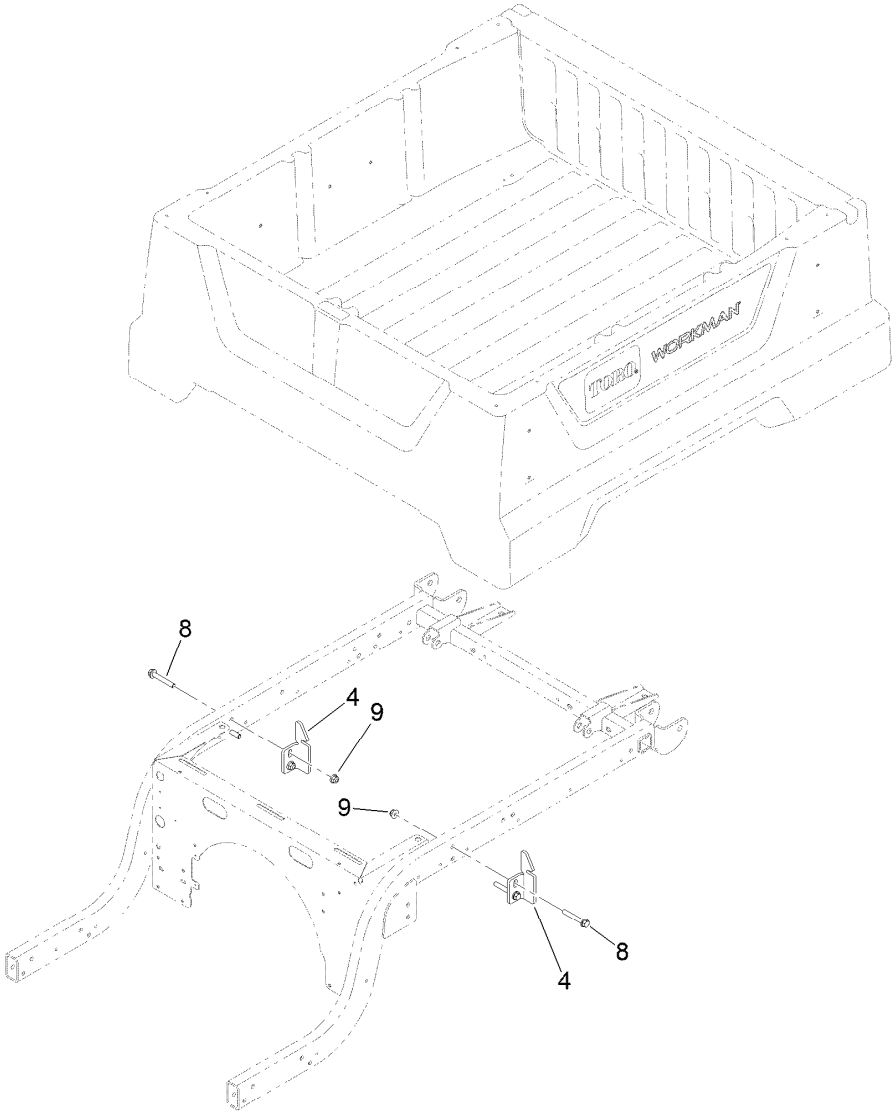

Cargo Bed Assembly

Ref.	Part Number	Qty.	Description
4	127-7428-03	2	Striker-Latch, Bed
8	3234-39	4	Screw-HHF
9	104-8301	4	Nut-HF, NI

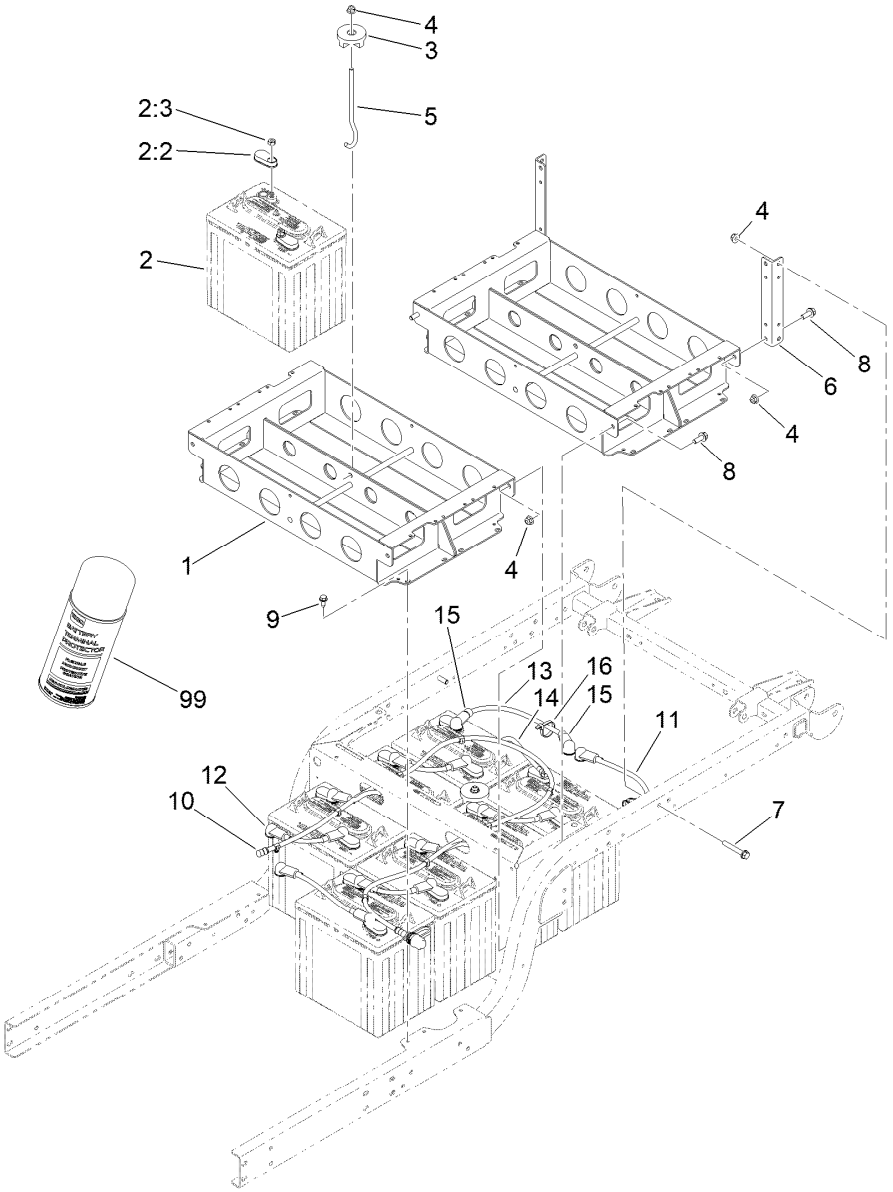

Battery Assembly

Ref.	Part Number	Qty.	Description
1	131-8300-03	2	Tray-Battery
2		8	Battery-Lead Acid, Wet ●
2:2	107-0289	2	Cover-Terminal, Battery
2:3	107-0388	2	Nut
3	104-7149	2	Hold Down ASM
4	104-8301	8	Nut-HF, NI
5	131-8387	2	Rod-Battery Hold Down
6	131-8302-03	2	Bracket-Box, Battery
7	3234-39	2	Screw-HHF
8	3234-42	4	Screw-HHF

Ref.	Part Number	Qty.	Description
9	32144-70	4	Screw-HWHTF
10	131-8491	1	Watering Hose ASM
11	107-0739	2	Cable-Battery, Positive
12	107-0738	6	Cable-Battery, Rd ASM
13	122-0750	1	Cable-Battery, Positive
14	94-6168	1	Wire-Ground, Battery
15	32180-009	2	Insulator-Lug, Red
16	3290-378	2	Tie-Cable
99	107-0392	1	Protection-Terminal, Aerosol

● Not serviced separately

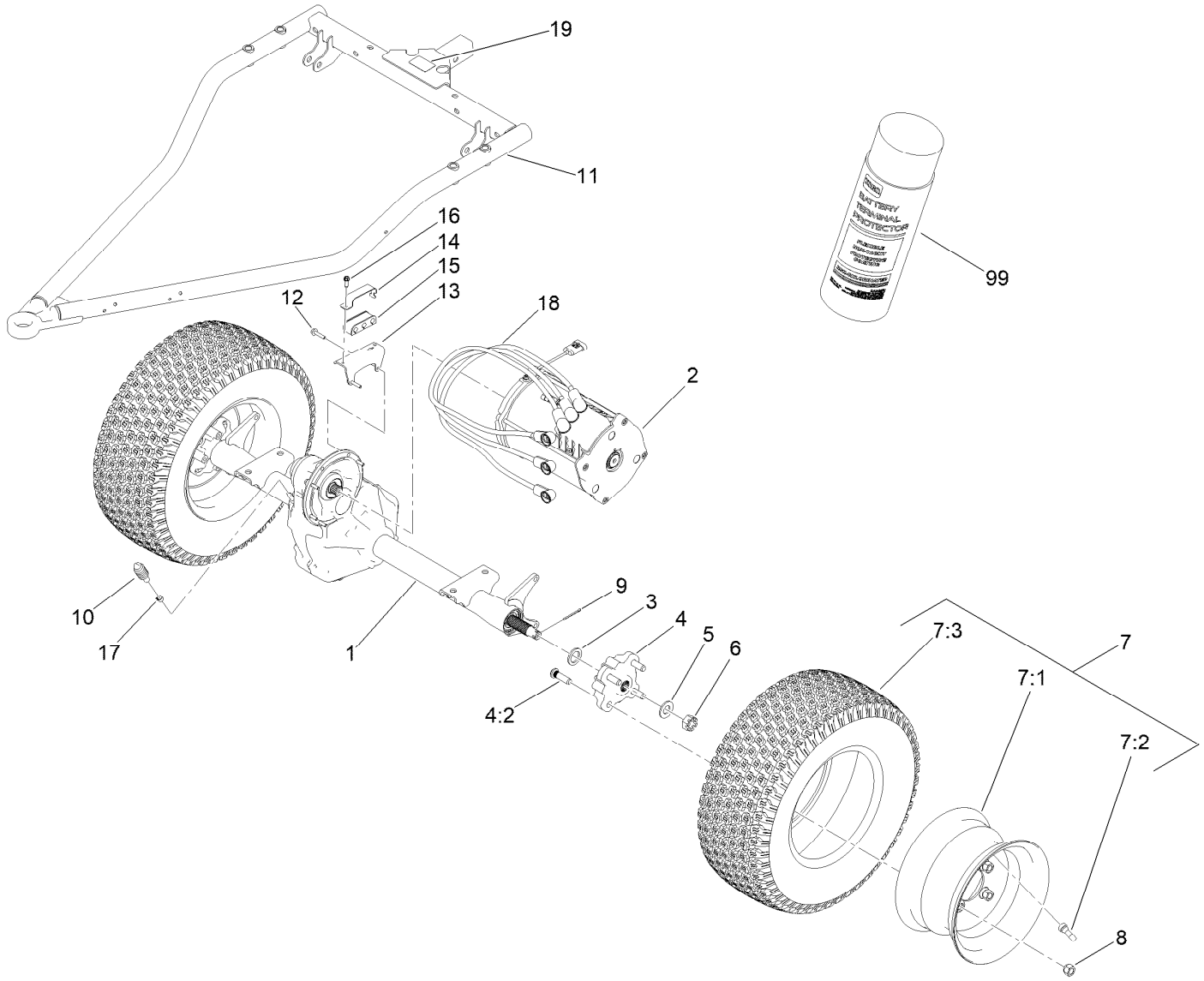

Rear Axle and Motor Assembly

Ref.	Part Number	Qty.	Description
1	136-6340	1	Transaxle ASM
2	137-6936	1	Motor-AC
3	131-8570	2	Spacer-Hardened
4	140-9951	2	Rear Hub ASM
4:2	10-6830	4	Stud-Type, Drive
5	92-5836	2	Washer
6	32136-5	2	Nut-Hex, Slotted
7	139-4495	2	Wheel And Tire ASM
7:1	131-8317	1	Wheel
7:2	232-27	1	Stem-Valve
7:3	139-4475	1	Tire-20 X 8.00-10
8	242-50	8	Nut-Lug
9	1-806800	2	Pin-Cotter

Ref.	Part Number	Qty.	Description
10	127-8859	1	Bellows-Breather
11	140-2568-03	1	Gtx-E Swing Arm ASM [black]
12	33103-030	6	Screw-HHF
13	131-8416	1	Bracket-Cable
14	131-8482	1	Retainer-Isolator
15	131-8420	1	Isolator-Clamp
16	49-2040	1	Screw-HWHTF
17	2412-146	1	Clamp-Hose
18	122-0743	3	Cable-Battery, Rd ASM
19	137-9984	1	Decal-Load, Towing
99	107-0392	1	Protection-Terminal, Aerosol

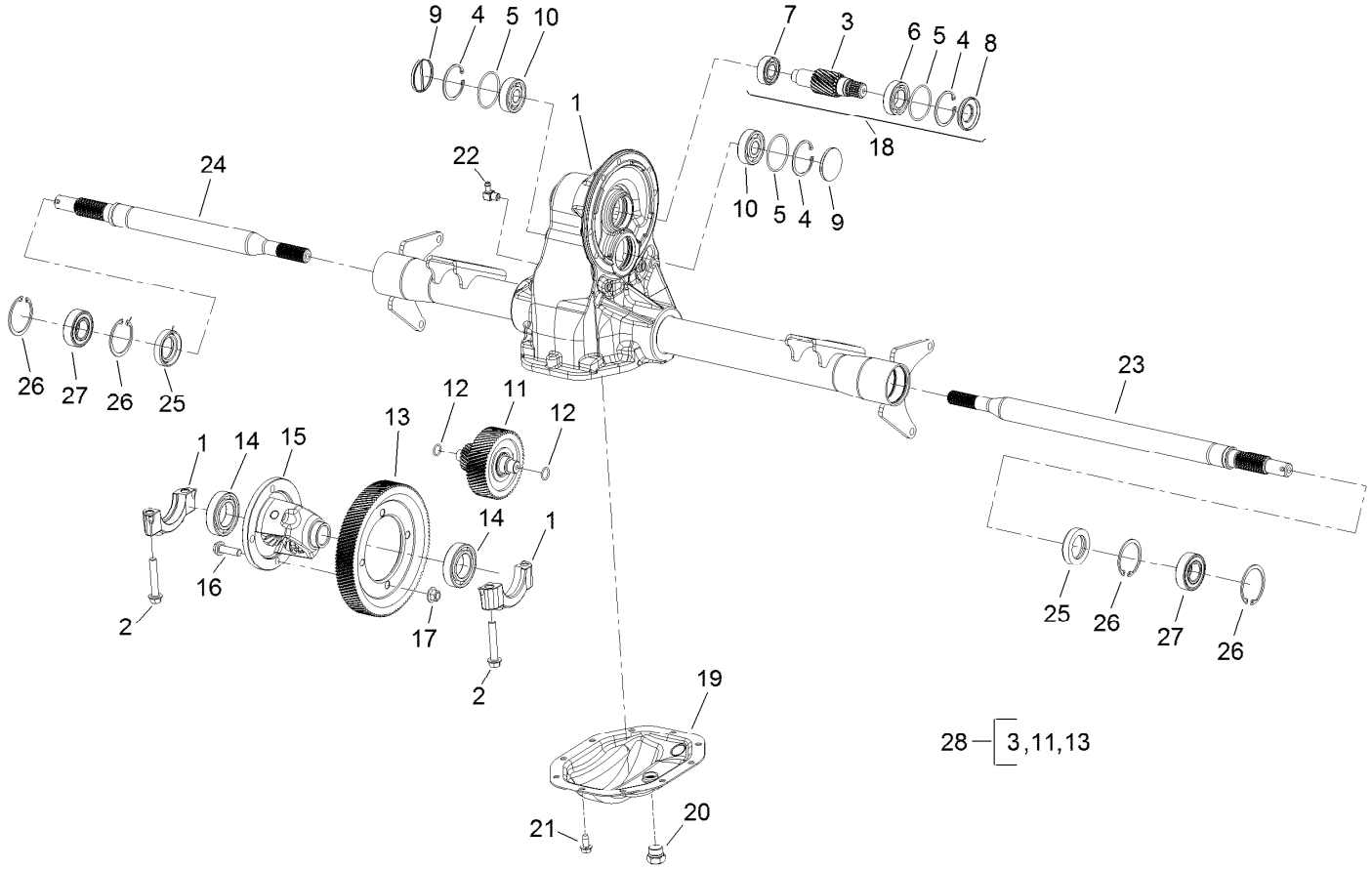

Transaxle Assembly No. 136-6340

Ref.	Part Number	Qty.	Description
1	133-2447	1	Housing-Axle
2	133-2448	4	Bolt-Cap, Bearing
3	133-2485	1	Gear-Input
4	133-2450	3	Ring-Retaining
5	133-2451	3	O-Ring
6	133-2452	1	Bearing-Ball
7	133-2453	1	Bearing-Ball
8	133-2454	1	Seal-Oil
9	133-2455	2	Plug-Cap, End
10	133-2456	2	Bearing-Ball
11	133-2486	1	Intermediate Gear ASM
12	133-2458	2	O-Ring
13	133-2459	1	Gear-Drive, Final
14	133-2460	2	Bearing-Ball

Ref.	Part Number	Qty.	Description
15	133-2461	1	Differential ASM
16	133-2462	4	Bolt-HHF
17	133-2463	4	Nut-Lock
18	133-2487	1	Input Gear Kit
19	136-6341	1	Plate-Cover
20	133-2466	1	Plug-HH
21	133-2467	10	Screw-Tapping
22	133-2468	1	Elbow-Hose
23	133-2469	1	Shaft-Axle, LH
24	133-2470	1	Shaft-Axle, RH
25	112-3140	2	Seal-Oil
26	133-2472	4	Ring-Retaining
27	108-2425	2	Bearing-Ball
28	108-2409	1	Internal Gear Kit

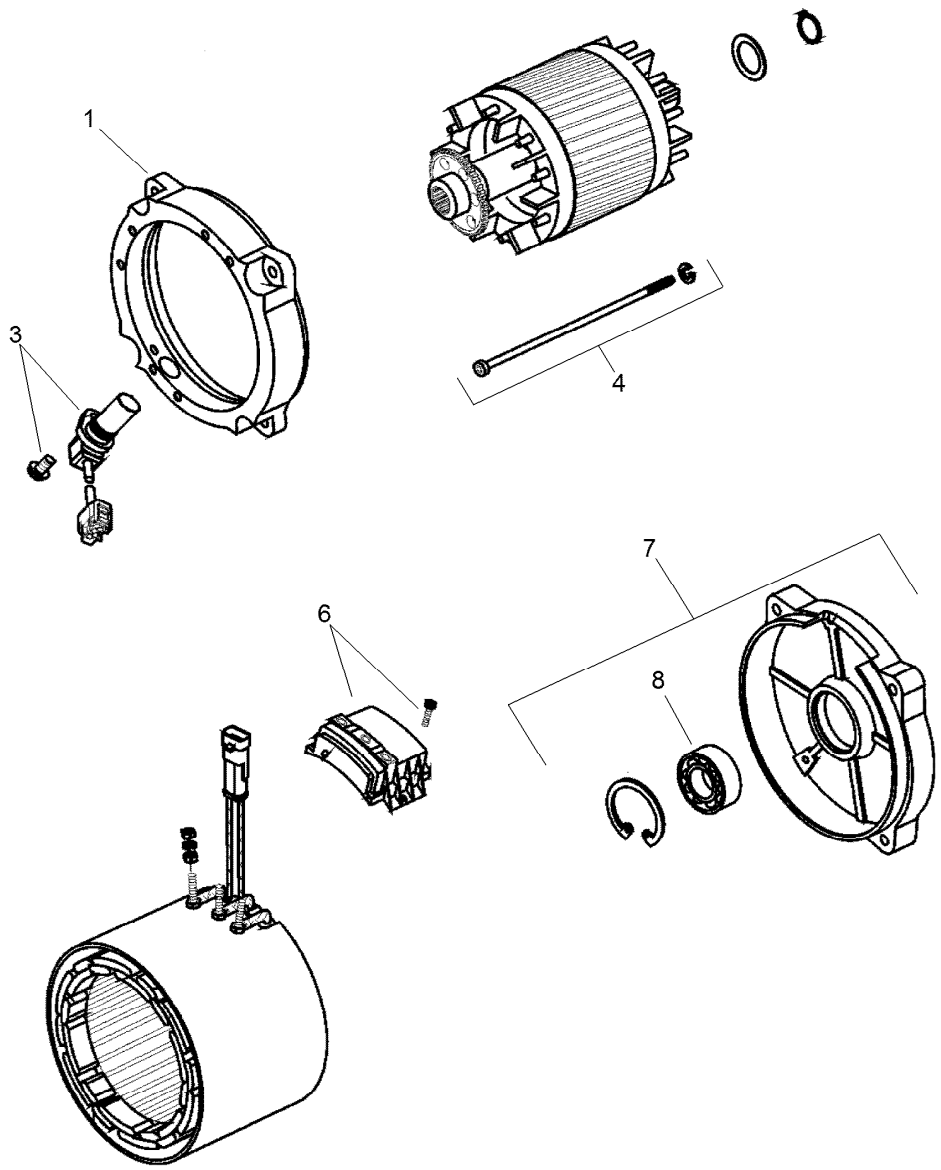

Electric Motor Assembly No. 137-6936

Ref.	*Part Number*	*Qty.*	*Description*
1	132-4924	1	Bracket-End, Drive
3	132-4925	1	Sensor
4	132-4926	1	Screw
6	132-4927	1	Plate-Connection
7	132-4928	1	Bracket-End, Rear
8	132-4929	1	Bearing

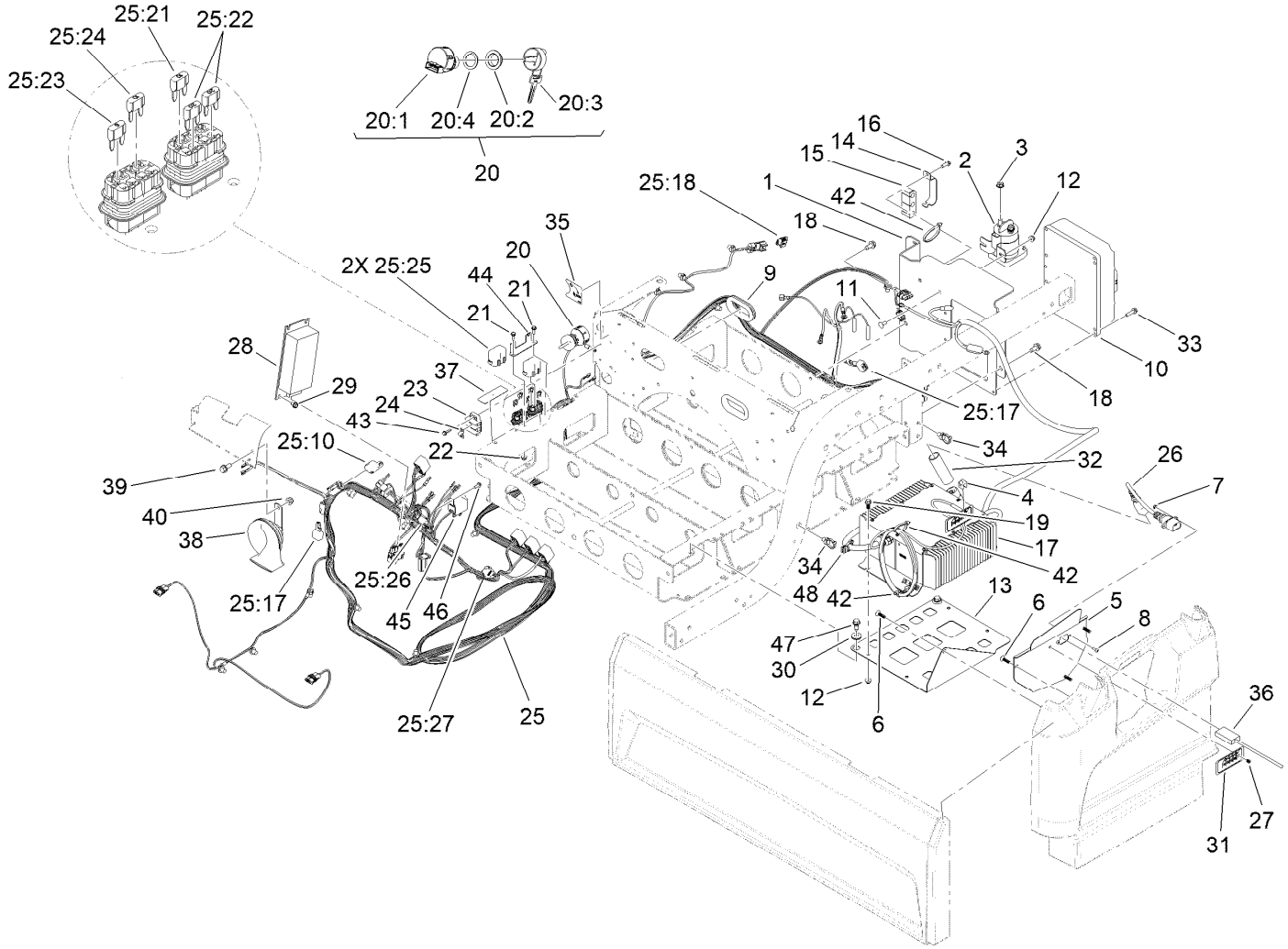

Controller Assembly

Ref.	Part Number	Qty.	Description
1	131-8415-03	1	Bracket-Controller
2	104-7136	1	Contactor-Trombetta
3	107-0380	2	Nut-HHF
4	32180-082	1	Clip-Edge W/Tie, Perpendicular
5	140-2578-05	1	Bracket-Mounting, Charger Cord
6	120-2349	4	Screw
7	3296-54	2	Nut-Lock
8	3250-26	2	Screw-PPH
9	240-12	2	Grommet-Rubber
10	137-9898	1	Controller-Sevcon
11	3229-11	2	Screw-CARR
12	104-7201	6	Nut-HF, NI
13	140-2598-03	1	Bracket-Mounting, Charger
14	131-8482	1	Retainer-Isolator
15	131-8420	1	Isolator-Clamp
16	49-2040	1	Screw-HWHTF
17	131-8490	1	Charger-48V Onboard
18	32144-70	3	Screw-HWHTF
19	99-6810	4	Screw-HHF
20	110-2580	1	Switch-Key, Supervisor
20:1		1	Switch-Key ■
20:2	108-8660	1	Nut-Mounting
20:3	110-5221	1	Set-Key, Supervisor
20:4	108-8659	1	Washer-Backup
21	32105-23	2	Screw
22	3290-148	2	Nut-HF
23	42862	1	Block-Terminal, Ground
24	42863	1	Strip-Jumper
25	122-2487	1	Harness-Wire, Gtx-E, Lead Acid, Main
25:10	32180-156	1	Cap-Plug, 6 Way
25:17	100-4918	2	Diode
25:18	32160-092	1	Connector-Mp280, 2F
25:21	121-8880	1	Fuse-Mini Blade, 10 Amp

● Not illustrated

■ Not serviced separately

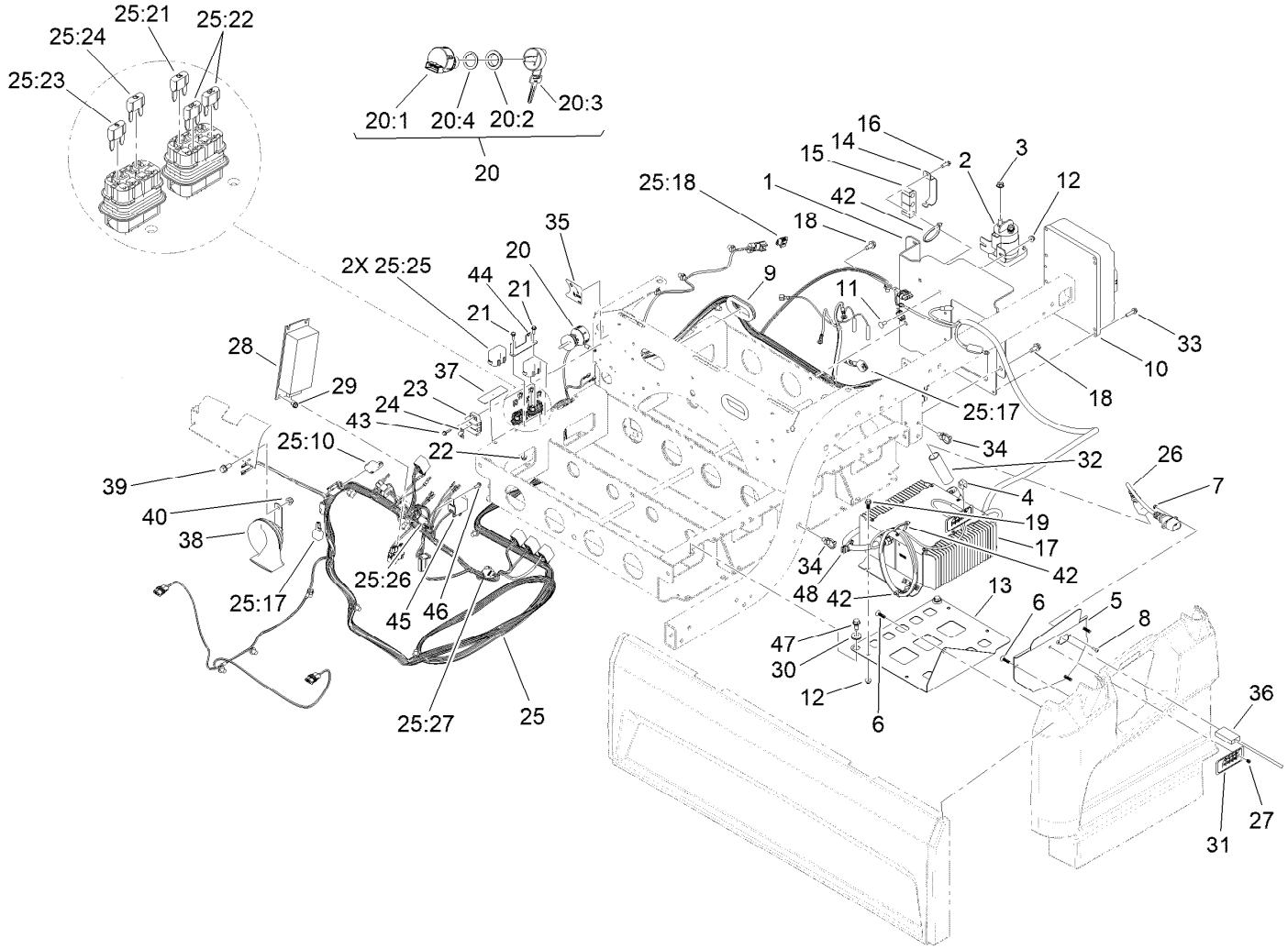

Controller Assembly (continued)

Ref.	Part Number	Qty.	Description
25:22	121-8882	2	Fuse-Mini Blade, 20 Amp
25:23	121-8864	1	Fuse-Mini Blade, 5 Amp
25:24	121-8866	1	Fuse-Mini Blade, 10 Amp
25:25	32180-195	2	Cover-Cooper-Bussmann, Cfh (Short)
25:26	32180-282	1	Resistor-120 Ohm
25:27	32180-089	1	Cap-Plug, 3 Way
25:28	32180-101	1	Cover-Fuse, Single ●
26	131-8497	1	Cordset
27	131-8499	1	Holder-LED
28	137-7952	1	Converter-DC-DC
29	99-8445	2	Screw-HWH
30	109-0023	2	Grommet
31	131-8495	1	Decal-Function, Charger
32	107-0341	1	Tube-Shrink, Heat
33	32144-86	4	Screw-HWHTF
34	32180-030	3	Clip-Tie

Ref.	Part Number	Qty.	Description
35	131-8527	1	Decal-Mode
36	107-0382	1	Powercord-AC, Europe
36	107-0383	1	Powercord-AC, U.K.
36	107-0384	1	Powercord-AC
37	145-2273	1	Decal-Fuse Block 48V
38	107-0358	1	Horn
39	3234-5	1	Screw-HHF
40	104-8300	1	Nut-HF, NI
42	3290-378	3	Tie-Cable
43	100-4351	2	Screw-HWH
44	138-9299	1	Bracket-Fuse Block
45	122-2401	1	Relay, 48V Coil, 50A At 48V
46	32144-1	1	Screw-Taptite
47	126-4424	2	Screw-Shoulder
48	32180-225	1	Clip-Edge, Perpendicular W/Tie

● Not illustrated

■ Not serviced separately

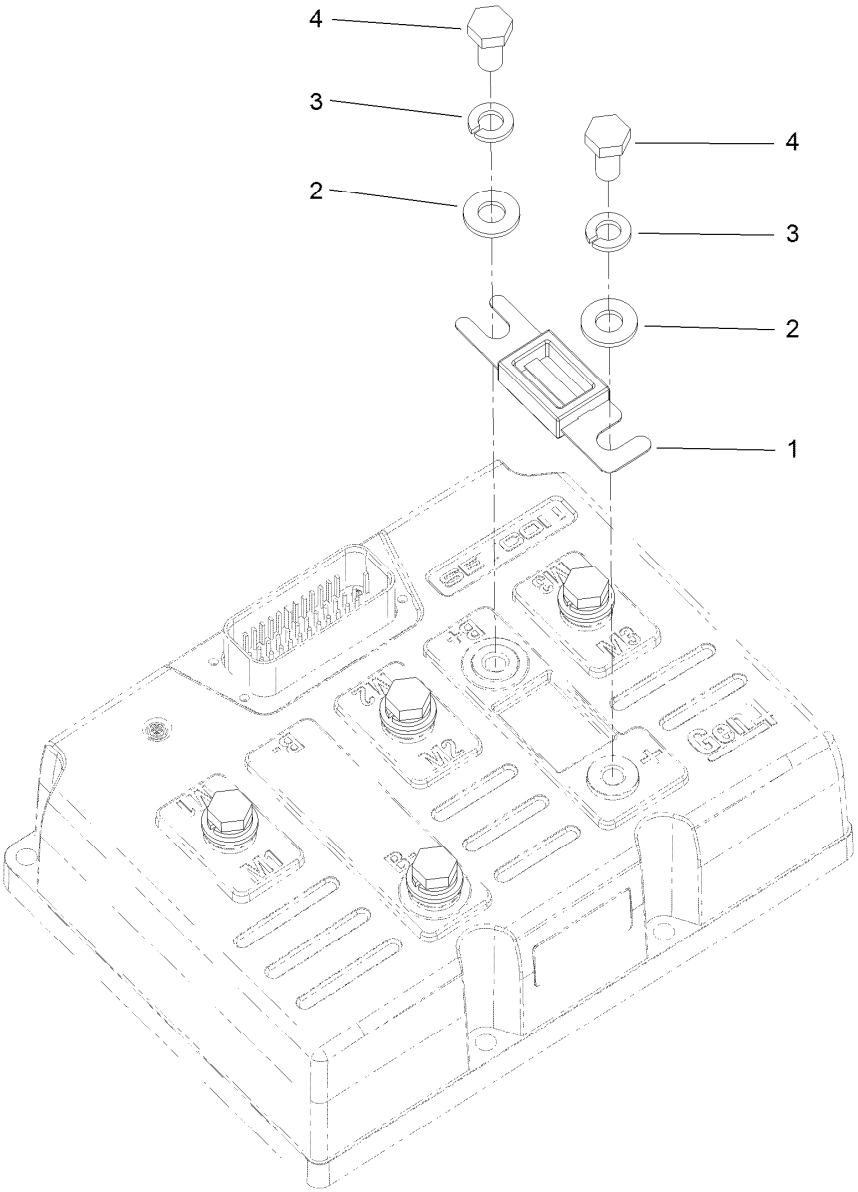

Sevcon Controller Assembly No. 137-9898

Ref.	*Part Number*	*Qty.*	*Description*
1	131-8494	1	Fuse-425 Amp
2	33094-00	6	Washer-Plain
3	3253-4	6	Washer-Lock
4	33114-016	6	Screw-HH

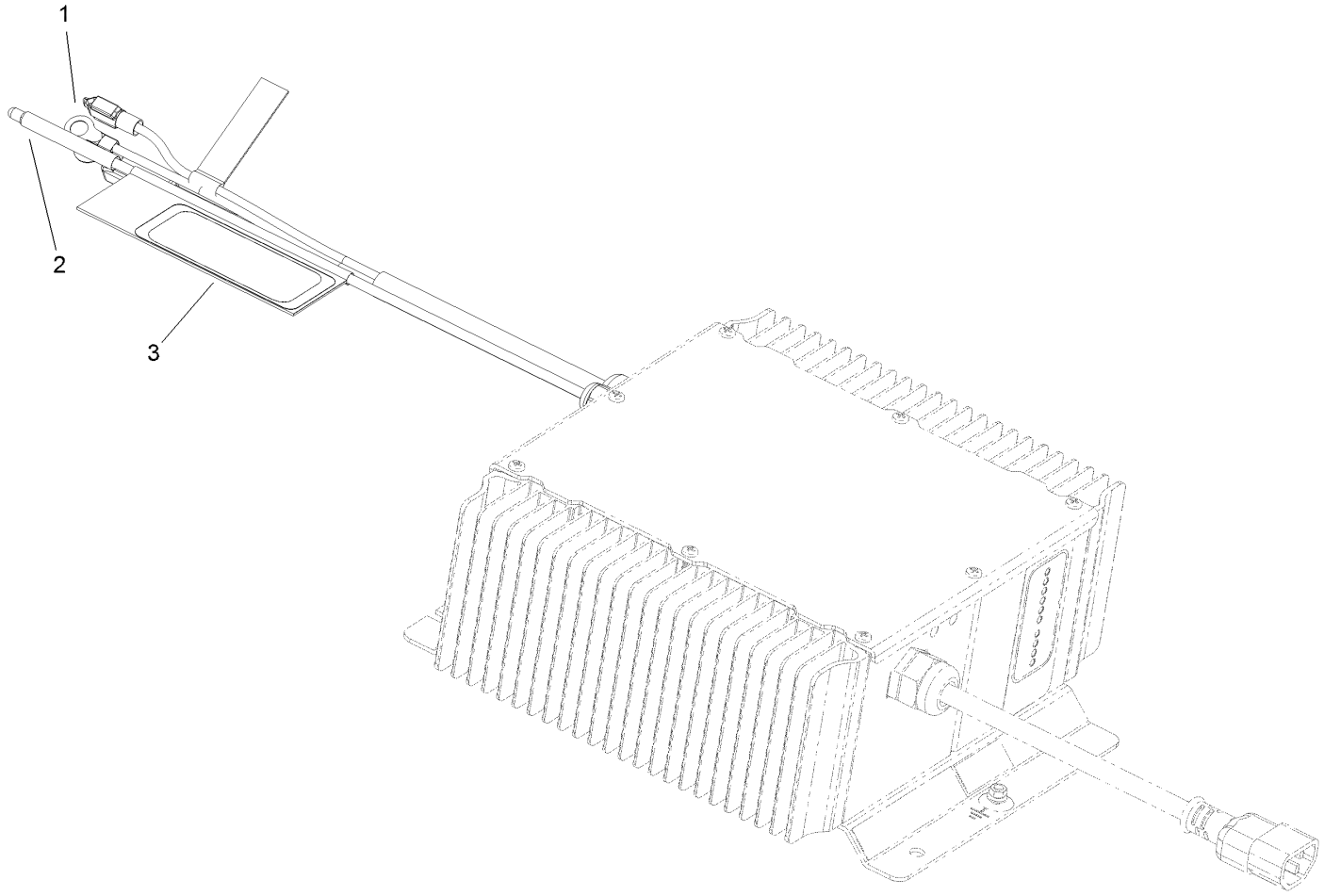

Onboard Charger Assembly No. 131-8490

Ref.	*Part Number*	*Qty.*	*Description*
1	131-8511	1	Thermister Repair Kit
2	131-8512	1	Remote LED
3	131-8495	1	Decal-Function, Charger

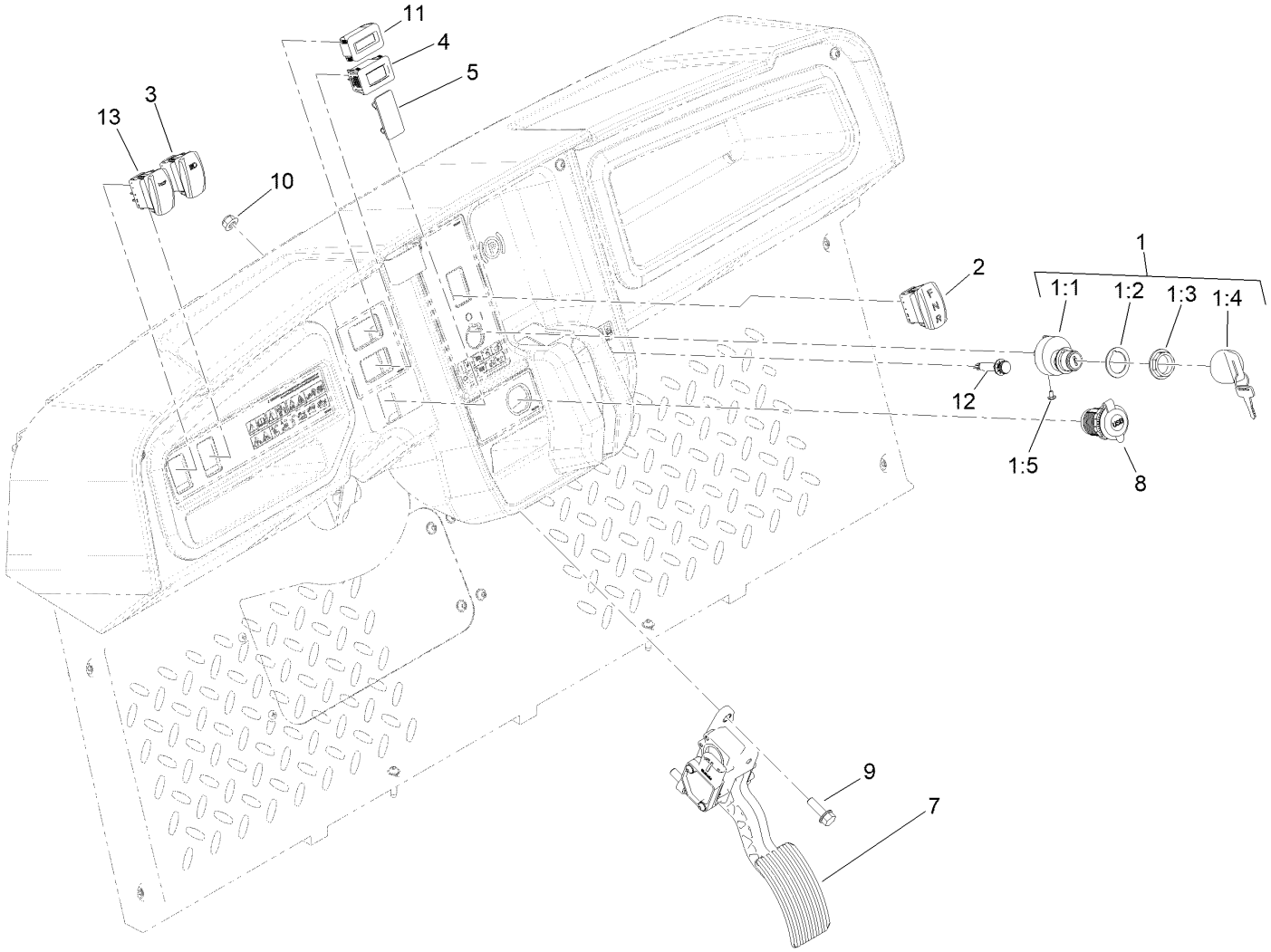

Accelerator Pedal and Key Switch Assembly

Ref.	Part Number	Qty.	Description
1	120-4815	1	48V Key Switch ASM
1:1		1	Switch-Key ●
1:2	108-8659	1	Washer-Backup
1:3	108-8660	1	Nut-Mounting
1:4	106-5270	1	Ignition Key Set
1:5	3250-28	3	Screw
2	144-2407	1	Switch-Rocker, On-Off-On
3	144-2405	1	Switch-Rocker, On-None-On
4	120-2244	1	Hourmeter
5	99-7420	1	Plug-Hole
7	121-9675	1	Pedal-Accelerator
8	131-8388	1	Socket-USB
9	3234-29	3	Screw-HHF
10	104-8300	3	Nut-HF, NI
11	131-8381	1	Gauge-Battery
12	140-4603	1	Light-Indicator
13	144-2415	1	Switch-Rocker, (On)-None-Off

● Not serviced separately

Attachments and Accessories

For 07412EX Workman GTX Electric Utility Vehicle with Extended Chassis

Product Name	Model/Part
Workman GTX 2-Person Canopy	07921
Workman GTX 4-Person Canopy	07922
Steel Cargo Bed Base, Workman GTX Series Utility Vehicle	07450
Steel Cargo Bed Solid Sides Kit, Workman GTX Series Utility Vehicle	07451
48V Electric Lift Kit	07143
Rear Attachment Receiver, Workman GTX Series Utility Vehicle with Steel Cargo Bed	07186
Brake and Signal LED Light Kit, Workman GTX Gasoline Utility Vehicle or Serial Number 404400000 and After Workman GTX Electric Utility Vehicle	140-4785
Brush Guard Kit	07145
LED Homologation Lamp Kit	147-2798
Front Hitch Kit, Workman GTX Series Utility Vehicles with Brush Guard	07146
Front Hitch Kit, Workman GTX or MDX Series Utility Vehicles without Brush Guard	07147
Extended Bed Kit	07149
Storage Box Kit	07156
Walk Spreader Mounting Kit	07029
6in L-Track Kit	07158
2in L-Track Kit	07159
Hose Reel Mounting Kit	07027
Hand Pump Hose Asm	131-8522
Horn Kit	133-3017
Reverse Alarm Kit	131-8549
Power Point Kit	131-8550
Power Converter Kit	133-0959
Trash Can Mounting Kit	07028
Bed Rack Kit	07031
Cab Kit	07142
Canopy Kit, Multi-passenger Workman GTX Utility Vehicle	07141
Mount-Ball	133-7116
Road Light and Homologation Kit	133-7128
48V 6 Foot Bed Electric Lift Kit	07168
Tire-20 8.00-10	116-7333
Cab Mount Kit, Workman GTX Utility Vehicle with Extended Flatbed	133-7198
Service Hood ASM	133-7209
ROPS Kit	07032
Cargo Bed Kit	07046
Bench Seat Base Kit	07047
Bucket Seat Base Kit	07048
Extension Kit	07049
Small Bedrack Mount Grip Kit	136-6311
Large Bedrack Mount Grip Kit	136-6312
Deionizer-Water	137-2884
Plate-Skid	137-2887-03
Ignition Switch ASM (Key1)	138-3505
Ignition Switch ASM (Key2)	138-3506
Ignition Switch ASM (Key3)	138-3507

Attachments and Accessories (continued)

Ignition Switch ASM (Key4)	138-3508
Ignition Switch ASM (Key5)	138-3509
Glove Box Cover Kit	137-2883
Steel Bed Side Kit	07180
Tube Sides Kit	07181
Fold-Down Rear Facing Seat	07123
Door Mount Mirror Kit	136-1997
Tire/Wheel Asm	131-8319
Van Box	07440
Folding Windshield Kit, Workman GTX Utility Vehicle with Canopy	07923
Tire	94-5236
Exterior Mirror Kit	130-5448
Interior Mirror Kit	130-5449
Beacon Kit	130-5484
Work Light Kit	130-5485
Windshield Washer Fluid Kit, 2015 and after Workman MD/HD Series Utility Vehicle	130-5615
Small Seat Cover	131-6690
Wide Angle Mirror Kit	133-1009
Wide Angle Mirror Kit	133-1038
Bracket-Mount, Radio	133-7111-03
Wireless Hourmeter Finish Kit	139-4627
GTX Ball Cage ROPS, Certified	07161
Canopy W/ ROPS	07169
Canopy Mount Kit, Workman GTX Utility Vehicle with Extended Flatbed	07199
Full Shelf For Van Box	07441

TORO®

Count on it.