FORM NO. 3320–781 Rev. A

TORO®

MODEL NO. 38191 – 3900001 & UP
MODEL NO. 38196 – 3900001 & UP

OPERATOR'S MANUAL

CCR 1000™ SNOWTHROWER

⚠ SAFETY INSTRUCTIONS

To ensure maximum safety, best performance, and to gain knowledge of the product, it is essential that you or any other operator of the snowthrower read and understand the contents of this manual before the motor is ever started. Pay particular attention to the safety alert symbol ⚠ which means CAUTION, WARNING OR DANGER — "personal safety instruction." Read and understand the instruction because it has to do with safety. Failure to comply with instruction may result in personal injury.

This snowthrower is designed and tested to offer safe and effective service, provided it is operated in strict accordance with the following Safety Instructions. Failure to comply with the following instructions **MAY RESULT IN PERSONAL INJURY.**

WARNING: Engine exhaust contains carbon monoxide which is an odorless, deadly poison. Carbon monoxide is also known to the State of California to cause birth defects. Do not run engine indoors or in an enclosed area.

BEFORE OPERATING

1. Read and understand the contents of this manual before operating the snowthrower. Be thoroughly familiar with all controls and proper use of the equipment. Know how to stop the snowthrower and disengage the controls quickly.

2. Never allow children to operate the snowthrower. Adults should operate the snowthrower only after reading this manual.

3. Keep everyone, especially children and pets, away from the snowthrower and area of operation.

4. Inspect area thoroughly where snowthrower will be used. Remove doormats, sleds, boards, sticks, wire, and any other foreign objects which might be picked up and thrown by the snowthrower.

5. Keep all shields and safety devices in place. If a shield, safety device, or decal is illegible or damaged, repair or replace it before beginning operation. Also, tighten any loose nuts, bolts or screws.

6. Wear adequate winter clothing and rubber boots that will ensure proper footing on slippery surfaces. Do not wear loose fitting clothing that could possibly get caught in moving parts.

7. Always wear safety glasses or eye shields during operation or while performing an adjustment or repair to protect eyes from foreign objects that may be thrown from the machine.

8. Because fuel is highly flammable, handle it carefully.

A. Use an approved fuel container.

B. Fill fuel tank outdoors with extreme care, not indoors.

C. NEVER ADD FUEL TO AN ENGINE THAT IS RUNNING OR HOT.

D. Reinstall gas cap securely on fuel container and gas tank, and wipe up any spilled gasoline before starting engine.

9. Allow engine to warm up outdoors before operating. Do not run engine indoors.

WHILE OPERATING

10. Use only the extension cord provided with the CCR 1000 Electric Start Model. Do not plug the extension cord into outlet while standing in water or when hands are wet. Do not use cord if gasoline has been spilled. If extension cord is damaged, replace immediately.

11. Never direct discharge toward or operate snowthrower near bystanders, glass enclosures, automobiles and trucks, window wells or a drop–off. Never allow anyone in front of snowthrower.

12. Operate the snowthrower only when there is good visibility or light.

13. Always maintain secure footing and balance and keep a firm grip on the handle. Walk; never run. Exercise caution to avoid slipping or falling.

14. Be attentive when using the snowthrower, and stay alert for holes in the terrain and other hidden hazards.

15. STAY AWAY FROM DISCHARGE OPENING WHILE OPERATING THE SNOWTHROWER. Keep face, hands, feet, and any other part of your body or clothing away from concealed, moving, or rotating parts.

16. Never clear snow off steep slopes or across the face of slopes. Exercise extreme caution when changing direction on slopes.

©The Toro Company–1992, Rev. 1993
All Rights Reserved

⚠SAFETY INSTRUCTIONS

17. DO NOT USE SNOWTHROWER ON A ROOF.

18. Do not overload the snowthrower by clearing snow at too fast a rate.

19. Never operate snowthrower at high transport speeds on slippery surfaces.

20. Use extreme caution when crossing or operating snowthrower on walks, roads, gravel or crushed rock drives. Refer to Operating Instructions, page 8, item 4 for correct operating procedure.

21. If a foreign object is hit or snowthrower vibrates abnormally, stop engine by turning key to OFF, disconnect spark plug wire, disconnect the cord on electric start units, and wait for all moving parts to stop. Check snowthrower immediately for possible damage, an obstruction or loose parts. Vibration is generally a sign of trouble. Repair any damage before operating snowthrower again.

22. Before adjusting, cleaning, repairing, or inspecting the snowthrower, or before unclogging the discharge chute, stop engine by turning key to OFF and wait for all moving parts to stop. Do not make adjustments while engine is running. Disconnect the spark plug wire and keep the wire away from the plug to prevent accidental starting.

23. WHENEVER YOU LEAVE THE OPERATING POSITION, STOP ENGINE BY TURNING KEY TO OFF. REMOVE KEY FROM SWITCH IF UNIT WILL BE UNATTENDED.

24. Let snowthrower run for a few minutes after clearing snow so moving parts do not freeze.

MAINTAINING SNOWTHROWER

25. REMOVE KEY FROM SWITCH when storing snowthrower. Store key in a memorable place.

26. Never store snowthrower with fuel in fuel tank inside a building where ignition sources such as an open flame, sparks, hot water and space heaters, and clothes dryers are present. Allow engine to cool before storing. Never store snowthrower in house (living area) or basement because gasoline and fumes are highly flammable, explosive, and dangerous if inhaled.

27. Always refer to Operator's Manual for important details if snowthrower is to be stored for an extended period.

28. Perform only those maintenance instructions described in this manual. Remove key from switch before performing maintenance procedures to prevent the possibility of accidental starting. If major repairs are ever needed, contact your local Authorized TORO Service Dealer for assistance.

29. Keep snowthrower in safe operating condition by keeping nuts, bolts, and screws tight. Check all fasteners frequently to ensure they are tight.

30. To ensure optimum performance and safety, purchase genuine TORO replacement parts and accessories to keep your TORO all TORO. **NEVER USE "WILL FIT" REPLACEMENT PARTS AND ACCESSORIES.** The TORO logo assures genuineness.

SAFETY SYMBOL GLOSSARY

Safety decals and instructions are easily visible to the operator and are located near any area of potential danger. Replace any decal that is damaged or lost.



Whenever you leave the operating position, stop engine by turning key to OFF.

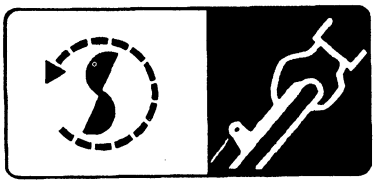

Rotor drive—Engaged

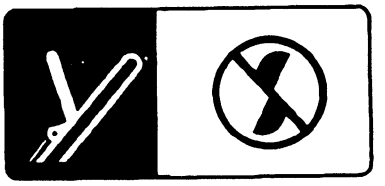

Rotor drive—Disengaged



Shut off engine before unclogging discharge chute

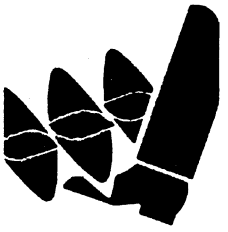

Avoid injury from rotating auger by keeping hands, feet, and clothing away.

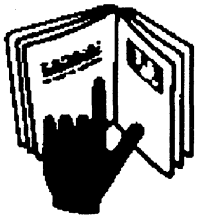

Read and understand operator's manual



Primer pump



Choke on



Recoil starter



Ignition off



Ignition on



110 volt starter

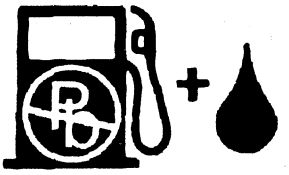

50:1 ratio unleaded gasoline to TORO 2–cycle oil

TABLE OF CONTENTS

	Page
Assembly Instructions	4
Before Operating	6
Operating Instructions	7
Maintenance	8
General Maintenance	8
Adjusting Control Bar	8
Draining Gasoline	9
Replacing Scraper	9
Replacing Drive Belt	9
Replacing Spark Plug	10
Replacing Rotor Blades	11
Adjusting Carburetor	12
Storing Snowthrower	12
Toro Service Support	12
Product Identification	12

ASSEMBLY INSTRUCTIONS

Note: Determine left and right sides of snowthrower by standing in the normal operating position.

INSTALL WHEELS (Fig. 1)

1. Place a wood block under the wheel axle for support.

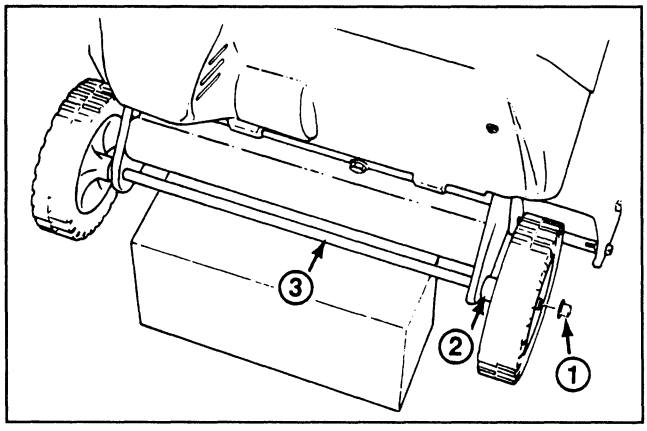

Figure 1

1. Pushnut 2. Spacer 3. Axle

2. Slide a spacer and wheel onto the axle. The side of the wheel with six spokes must face the center of the axle. Slide a pushnut onto the end of the axle.

3. Using a hammer, strike the pushnut to seat the nut firmly in place. Repeat steps 1–3 for the other wheel.

INSTALL DISCHARGE CHUTE AND CHUTE HANDLE (Fig. 2)

1. Place chute handle over chute ring.

2. Insert discharge chute between chute ring and chute handle. Align holes.

3. Secure back of chute and handle to center hole in chute ring with a carriage bolt, washer, and locknut. Position washer and nut on outside of chute.

Note: Chute ring may be rotated to ease assembly of discharge chute.

4. Secure chute and handle to remaining holes in chute ring and tighten all nuts securely.

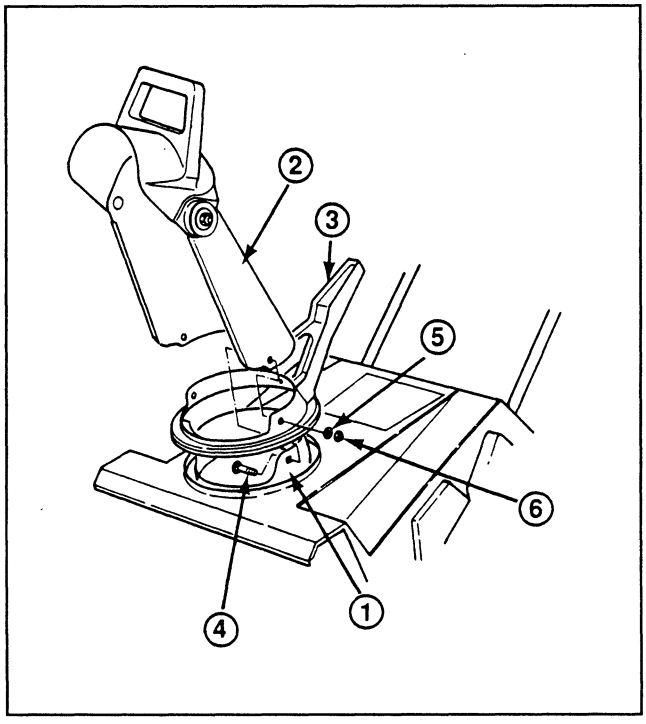

Figure 2

1. Chute ring
2. Discharge chute
3. Chute handle
4. Carriage bolt
5. Washer
6. Locknut

INSTALL HANDLE (Fig. 3)

1. Remove tie securing control cable to lower handle.

2. Slide handle ends through openings in shroud and onto lower handles inside shroud.

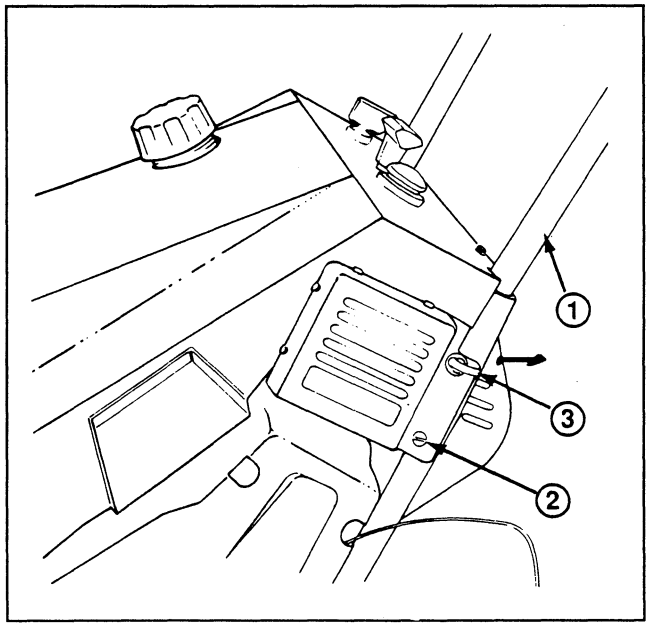

Figure 3

1. Handle 2. Machine screw 3. Eyebolt & spacer

ASSEMBLY INSTRUCTIONS

3. Secure right side of handle with (2) machine screws. Secure left side of handle with (1) machine screw, (1) eyebolt, and a spacer. Use the eyebolt to mount upper left side of handle. Insert the eyebolt through the spacer before using it to secure handle to the snowthrower frame. The eyebolt must be positioned perpendicular to handle when tightened.

INSTALL CONTROL CABLE (Fig. 4–5)

1. Route control cable through eyebolt on left side of snowthrower.

2. Hook spring to round hole at end of cable adjuster (Fig. 4).

3. Route cable through elongated hole in cable adjuster. Insert Z fitting on end of cable into 3rd hole on cable adjuster (Fig. 4).

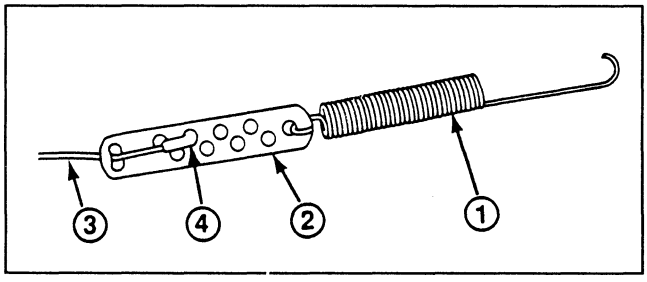

Figure 4

1. **Spring**
2. **Cable adjuster**
3. **Cable**
4. **Z fitting**

4. Slide spring cover over spring and cable adjuster. Push spring end through hole at end of spring cover.

5. Hook spring into top hole of control bar bracket (Fig. 5).

6. Move control bar back toward handle until slack in cable is removed. The gap between the control bar bracket and handle should be approximately 1/16"–1/8". See insert, Figure 5. If an adjustment is required, refer to Adjusting Control Bar, page 8.

Note: The control cable must always have slack in it when in the disengaged position.

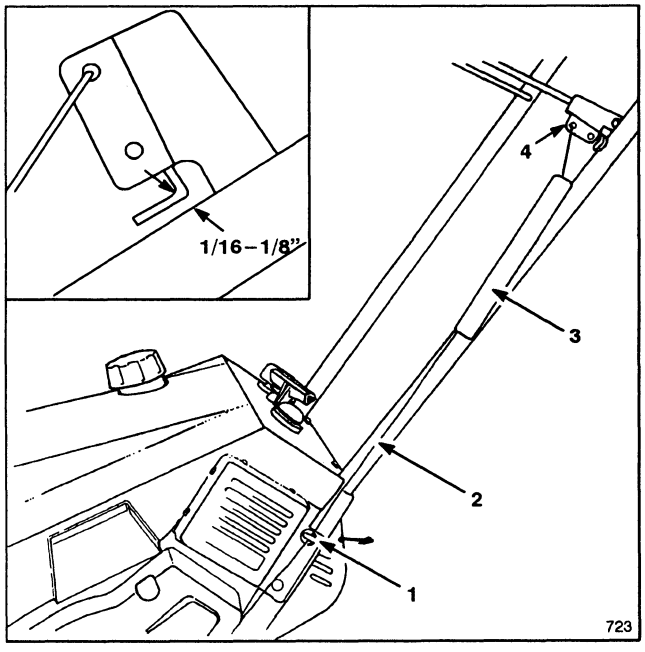

Figure 5

1. **Eyebolt & spacer**
2. **Control cable**
3. **Spring cover**
4. **Control bar bracket**

BEFORE OPERATING

WARNING

DANGER: Gasoline is extremely flammable and explosive under certain conditions. Do not smoke when handling fuel and keep fuel far away from open flames and sparks. Never buy more than a 30 day supply of gasoline. Store it in an approved container. Keep gasoline out of the reach of children.

Refuel outdoors and only when engine is cold. Do not fill tank full. Fill tank to just below bottom of filler neck, not into the filler neck. This space is for expansion of fuel. Use funnel or spout to prevent spilling. Wipe up any spilled gas. Ensure area is dry before starting engine.

MIX GASOLINE AND OIL (Fig. 6)

1. APPROVED OIL—For simplicity and best engine performance, mix the contents of one 5.2 ounce bottle of Toro 50:1 Two–Cycle Oil with two gallons of fresh, unleaded regular gasoline. You can also use Toro "Easy–Mix" Two–Cycle Oil (3.2) ounce bottle mixed one per gallon of gasoline; 40:1 ratio) in this Toro two–cycle engine. Leaded regular gasoline may be used if unleaded regular is not available.

Toro Two–Cycle Oil is specially formulated to provide superior lubrication, make starting easy, and prolong engine life. If Toro Two–Cycle Oil is not available, mix two gallons of gasoline and 5.2 ounces of another high grade two–cycle oil that has the NMMA or BIA–TCW certification printed on the label.

NEVER USE AUTOMOTIVE OIL (i.e. SAE 30, 10W30 etc.), TWO–CYCLE OIL THAT IS NOT CERTIFIED NMMA/BIA–TCW, OR THE WRONG MIX RATIO BECAUSE THE ENGINE CAN BE DAMAGED, AND IT WOULD NOT BE COVERED BY THE TORO WARRANTY.

2. Mixing Gasoline and Oil—Pour a half gallon of gasoline into an approved gasoline container and add the correct amount of two–cycle oil. Install cap on gasoline container and shake the container to mix oil and gas thoroughly. Remove cap and add remaining amount of gasoline.

Toro also recommends that Toro Stabilizer/Conditioner be used regularly in all Toro gasoline powered products during operation and storage seasons. Toro Stabilizer/Conditioner cleans the engine during operation and prevents gum–like varnish deposits from forming in the engine during periods of storage.

IMPORTANT: NEVER USE METHANOL, GASOLINE CONTAINING METHANOL, GASOHOL CONTAINING MORE THAN 10% ETHANOL, PREMIUM GASOLINE, OR WHITE GAS BECAUSE ENGINE FUEL SYSTEM DAMAGE COULD RESULT.

DO NOT USE FUEL ADDITIVES OTHER THAN THOSE MANUFACTURED FOR FUEL STABILIZATION DURING STORAGE SUCH AS TORO'S STABILIZER/CONDITIONER OR A SIMILAR PRODUCT. TORO'S STABILIZER/CONDITIONER IS A PETROLEUM DISTILLATE BASED CONDITIONER/STABILIZER. TORO DOES NOT RECOMMEND STABILIZERS WITH AN ALCOHOL BASE SUCH AS ETHANOL, METHANOL OR ISOPROPYL. ADDITIVES SHOULD NOT BE USED TO TRY TO ENHANCE THE POWER OR PERFORMANCE OF MACHINE.

NOTE: Do not mix gasoline and oil in the product fuel tank. Oil that is at room temperature mixes easier and more thoroughly than cold oil.

50:1 GAS/OIL Mixing Chart

U.S. GALLON	
Gasoline	**Oil**
1 gallon	2.6 oz.
1.5 gallons	3.9 oz.
2 gallons	5.2 oz.

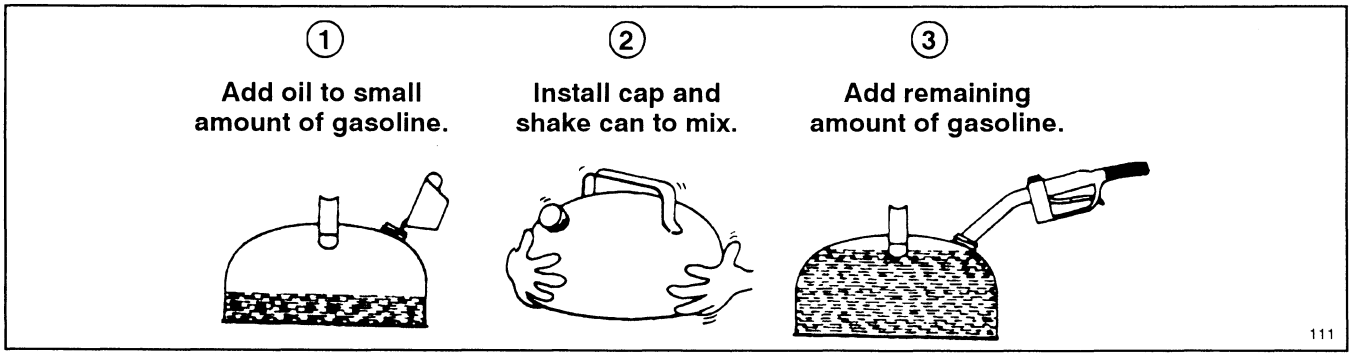

Figure 6

OPERATING INSTRUCTIONS

STARTING/STOPPING ENGINE (Fig. 7)

1. CONTROLS—Key switch, primer, electric start button, and recoil starter are located on the control panel. The choke lever is just below the lower left corner of the control panel.

2. Turn key to ON and move choke lever to ON (far right position).

3. Cover hole in center of primer with thumb and push primer twice slowly (1 to 2 seconds per prime) for temperatures above 0°F (−18°C). Push primer slowly three times for temperatures below 0°F (−18°C). **DO NO NOT PRIME IF THE ENGINE HAS BEEN RUNNING AND IS HOT**

Note: When starting engine for first time or after running out of fuel, more priming may be required to start engine.

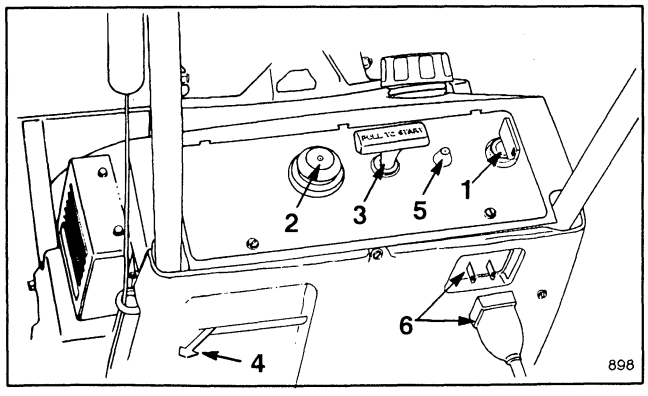

Figure 7

1. Key switch
2. Primer
3. Recoil start
4. Choke
5. Elec. start button*
6. Cord connection*

*ELEC. START MODEL

4a. RECOIL STARTING—Hold snowthrower with one hand and pull recoil starter vigorously with other hand. If engine does not start after three pulls, push primer once more and pull recoil starter vigorously again.

4b. ELECTRIC STARTING—Connect extension cord to snowthrower and standard household power outlet. Push starter button. When engine starts, disconnect extension cord from snowthrower and outlet.

IMPORTANT: Excessive running of the electric starter could damage the starter due to overheating. If you are having difficulty starting the engine, ONLY TRY THIS STARTING PROCEDURE TWICE. Run the electric starter no more than 10 times at intervals of 5 seconds ON, 5 seconds OFF. If engine does not start after this first attempt, wait more than 40 minutes to allow starter to cool before trying to run starter again. Before repeating engine starting procedure, check that ignition key switch is ON, and make sure there is fresh fuel in fuel tank. If engine still will not start after a second attempt, bring the snowthrower to an Authorized Toro Service Dealer for servicing.

5. When engine starts, move choke lever to middle position after a few seconds of running time. After engine has warmed up, move choke lever to OFF (far left) position.

6. TO START/STOP ROTOR—To start rotor, squeeze control bar to handle. When the control bar handle is released, the rotor blades stop, but the engine continues to run.

7. TO STOP ENGINE—Release control bar to stop rotor, turn key to OFF, and wait for all moving parts to stop before leaving operator's position.

OPERATING TIPS (Fig. 8)

1. ADJUSTING DISCHARGE CHUTE—Move the chute handle left and right to adjust the direction of the snow stream. The chute deflector handle on top of the discharge chute controls the height of the snow stream. Do not overtighten the chute deflector mounting nuts so excessive force is required to adjust the deflector.

IMPORTANT: Do not use chute handle to lift snowthrower; damage to chute handle could result.

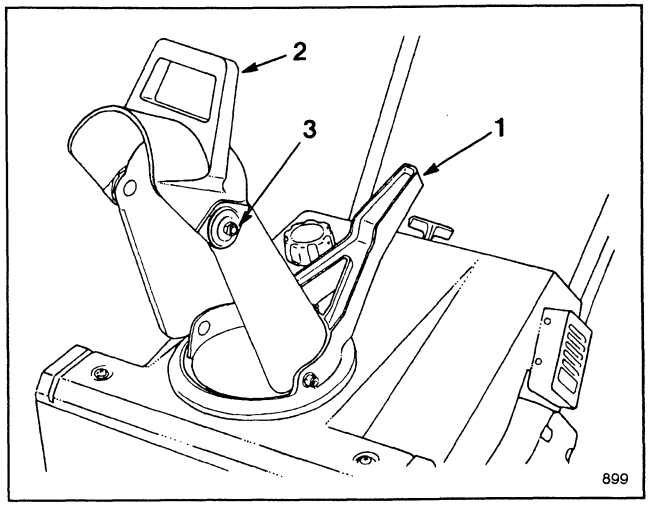

Figure 8

1. Chute handle
2. Chute deflector handle
3. Deflector mounting nuts

2. SELF−PROPELLING ACTION — The snowthrower clears down to the ground and propels itself forward when the handle is raised and the snowthrower is tilted **slightly** forward so rotor blades strike the ground. The wheels do not have to touch the ground in order to self-propel. The further you tilt the handles forward, the faster the snowthrower self-propels. However, depth and height of snow affects forward speed. Always overlap each swath and discharge downwind when possible.

OPERATING INSTRUCTIONS

⚠ WARNING

- **Stones, toys and other foreign objects may be picked up and thrown by the rotor blades.**
- **Thrown objects can cause serious personal injury to operator or bystanders.**
- **Keep the area to be cleared free of all objects that could be picked up and thrown by rotor blades.**
- **Keep all children and pets away from area of operation.**

3. Keep the area to be cleared free of stones, toys, or other foreign objects which may be picked up and thrown by the rotor blades. Such items could be covered by snowfall and, therefore, unnoticed until struck by the rotor blades. Always be sure to keep children and pets away from area of operation.

4. Should you find it necessary to clear snow from crushed rock or gravel, push down on handle to raise rotor blades clear of loose material that could be thrown by the blades and push unit forward.

5. In some snow and cold weather conditions, some controls and moving parts may freeze solid. **DO NOT USE EXCESSIVE FORCE WHEN TRYING TO OPERATE FROZEN CONTROLS.** When any control or part becomes hard to operate, start the engine and let it run for a few minutes. If control or part still will not move with moderate force, stop engine, remove ice or thaw out snowthrower.

6. AFTER CLEARING SNOW—Let engine run for a few minutes so ice does not freeze moving parts solid. After engine is shut off, wipe ice and snow off entire unit.

IMPORTANT: STORE SNOWTHROWER IN OPERATING POSITION ON ITS WHEELS. TIPPING OR STORING UNIT FORWARD ONTO FRONT HOUSING MAY CAUSE HARD STARTING.

MAINTENANCE

GENERAL MAINTENANCE

Keep snowthrower in safe operating condition by cleaning the unit and tightening nuts, bolts, and screws. The scraper, drive belt, rotor blades, and spark plug should be checked once a year.

ADJUSTING CONTROL BAR (Fig. 9–10)

Periodically check control bar for proper adjustment.

1. Turn ignition key to OFF.

2. CHECK ADJUSTMENT (Fig. 9)—Move control bar back toward handle until slack in cable is removed. Gap between control bar bracket and handle should be approximately 1/16"–1/8". If cable is too loose or too tight, proceed to step 3 for adjustment procedure.

Note: The control cable must always have slack in it when in the disengaged position.

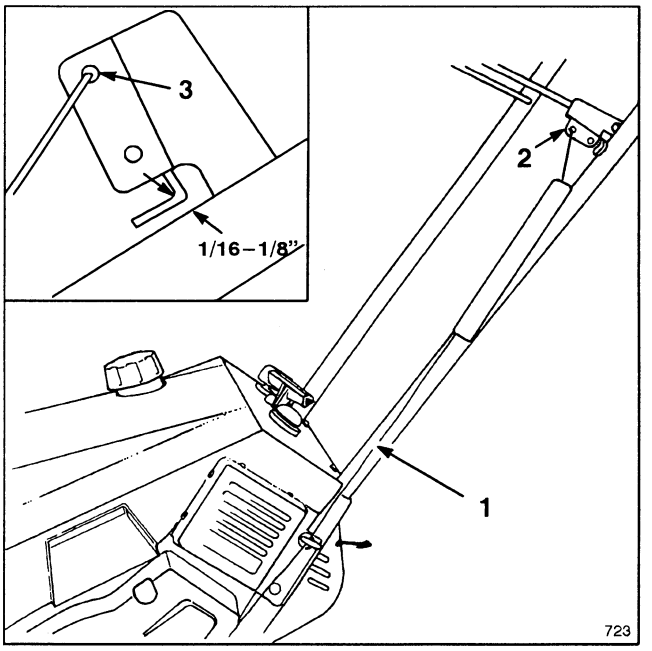

Figure 9

1. Cable 2. Control bar bracket 3. Top hole

3. ADJUST CABLE (Fig. 10)—Unhook spring end from the top hole in control bar bracket. Slide spring cover off cable to expose cable adjuster. Unhook Z fitting from cable adjuster and reposition Z fitting in a higher or lower hole on adjuster to obtain proper gap of 1/16"–1/8". Reinstall spring cover over cable adjuster. Rehook spring into top hole of control bar bracket.

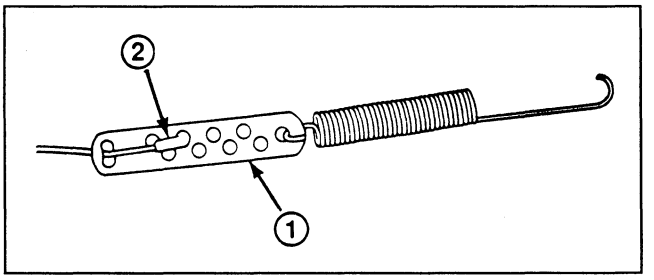

Figure 10

1. Cable adjuster 2. Z fitting

DRAINING GASOLINE

1. Stop engine. Remove key from switch.

2. Remove cap from fuel tank and use a pump type syphon to drain fuel into a clean, approved fuel container.

3. After fuel is drained, start engine and let it run until all fuel is consumed and engine stops. Repeat the starting procedure two more times to ensure all fuel is removed from the engine.

Note: This is the only procedure recommended for draining fuel.

REPLACING SCRAPER (Fig. 11–12)

Before each season, inspect scraper for wear. If thickness of bottom of scraper is less than 1/16" (1.6 mm), replace scraper (Fig. 11).

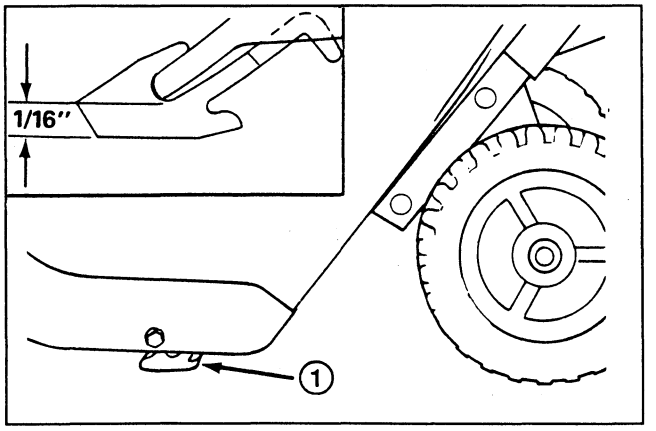

Figure 11

1. Scraper

1. Turn ignition key to OFF.

2. Drain gasoline from fuel tank; refer to Draining Gasoline, page 9.

3. Tip snowthrower forward onto nose.

4. Remove (3) carriage bolts and (3) flange nuts holding scraper in place (Fig. 12). Remove scraper.

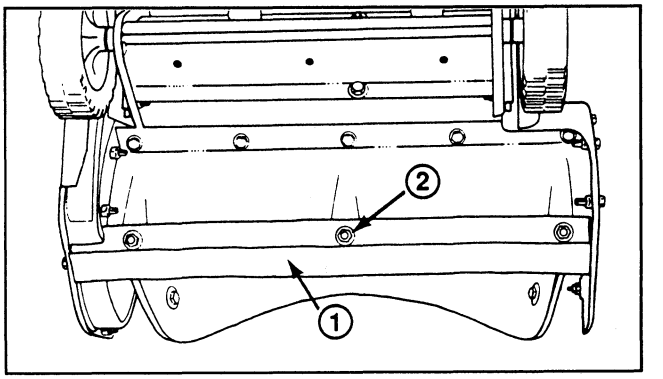

Figure 12

1. Scraper 2. Carriage bolt & flange nut

5. Secure new scraper to housing with carriage bolts and flange nuts. Position heads of bolts inside housing.

REPLACING DRIVE BELT (Fig. 13–14)

After extended use, the drive belt may wear and require replacement. If, after adjusting the control bar, the drive belt continues to slip under a heavy load or the rotor does not turn, check to see if the belt is severely worn.

1. Turn ignition key to OFF.

2. Drain gasoline from fuel tank; refer to Draining Gasoline, page 9.

3. Tip snowthrower on right side.

4. Remove (3) self tapping screws, (3) capscrews, (1) washer, and (3) nuts securing left side cover to snowthrower frame (Fig. 13). Lift off left side cover and allow it to hang from the cable.

MAINTENANCE

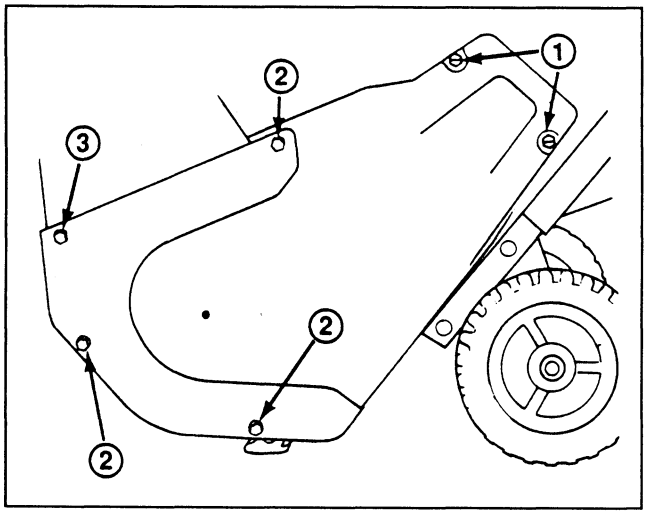

Figure 13

1. Self tapping screws
2. Capscrew, nut
3. Capscrew, nut, washer

5. REMOVING BELT (Fig. 14)—Slip belt off idler pulley. Push idler pulley downward, and slip belt from rotor pulley, idler pulley, and engine pulley.

6. INSTALLING BELT (Fig. 14)—Loop belt around rotor pulley and engine pulley first without slipping belt between rotor pulley and brake. Next, push idler pulley downward and slide belt between rotor pulley and brake. Release idler pulley, and slip belt under idler pulley.

7. Have a helper squeeze the control bar up against the handle (rotor engaged position) and hold it in that position.

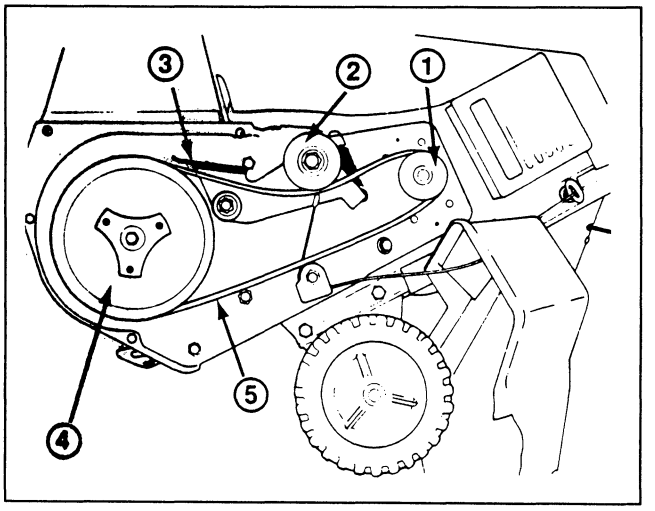

Figure 14

1. Engine pulley
2. Idler pulley
3. Brake arm
4. Rotor pulley
5. Belt

8. Reinstall the left side cover while holding control bar against handle. Tighten fasteners securely, but DO NOT OVERTIGHTEN.

REPLACING SPARK PLUG (Fig. 15–17)

Before each snow season, check the spark plug. If electrodes in center of plug are dark or have deteriorated, install a new plug. Use a Champion CJ8Y spark plug and set gap at .030" (.76 mm).

1. REMOVE CONTROL PANEL (Fig. 15)—Remove (2) screws securing control panel to housing. Remove ignition key and lift off panel, allowing it to hang on recoil rope.

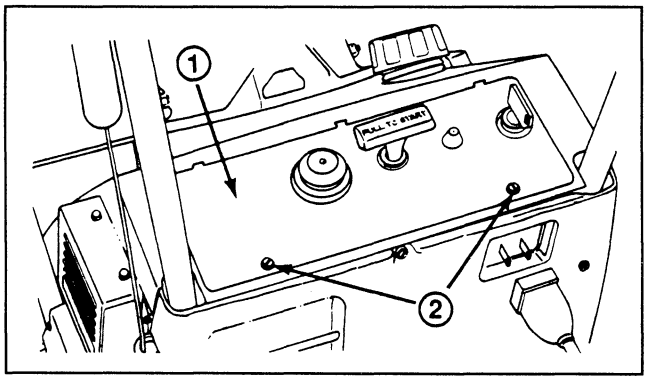

Figure 15

1. Control panel
2. Capscrews

2. REMOVE SPARK PLUG (Fig. 16)—Pull wire off spark plug and remove plug. Examine the plug and replace if cracked, fouled, or dirty. **DO NOT SANDBLAST, SCRAPE, OR CLEAN SPARK PLUG BECAUSE DIRT MAY RELEASE AND FALL INTO CYLINDER CAUSING ENGINE DAMAGE.**

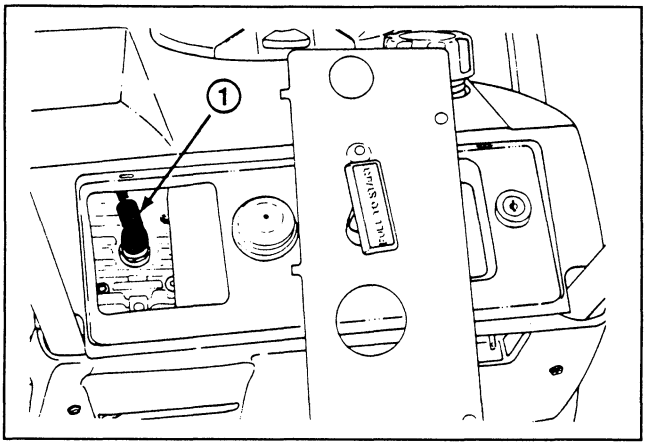

Figure 16

1. Spark plug wire

3. INSTALL SPARK PLUG—Set air gap (Fig. 17) between electrodes at .030" (.76 mm). Install plug and tighten to 15 ft–lb (20.4 N·m). If torque wrench is not used, tighten plug firmly with wrench by hand; **DO NOT OVERTIGHTEN**. Push wire onto spark plug and reinstall control panel.

MAINTENANCE

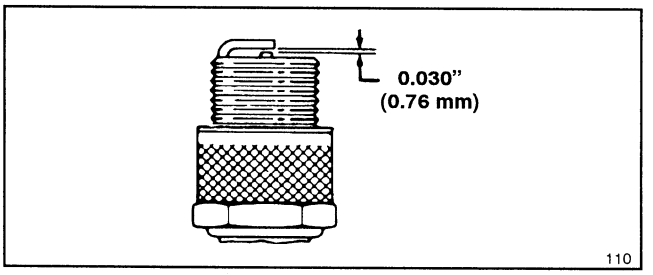

Figure 17

REPLACING ROTOR BLADES (Fig. 18–20)

Before each snow season, inspect rotor blades for wear. When blade edge has worn to the wear indicator hole (Fig. 18), the blades must be replaced to ensure proper performance and prevent damage to underside of snowthrower. Always replace both blades at the same time.

Note: Whenever rotor blades are replaced, scraper should also be replaced to ensure proper snowthrower operation and performance.

Removing Old Blade

1. Remove (4) torx screws and (4) locknuts securing outer edges of rotor blade to rotor shaft assembly (Fig. 19).

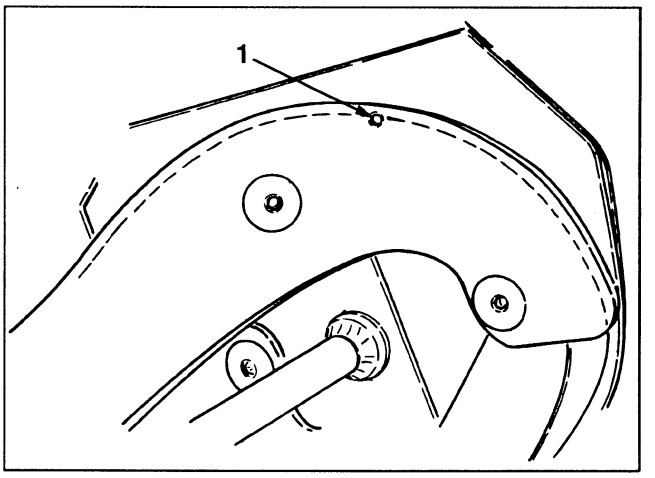

Figure 18

1. Wear indicator hole

2. Next, remove (2) hex–head capscrews, spacers and locknuts securing center of blade to steel plates (Fig. 19).

3. Loosen the hex–head screw securing the rotor halves to the auger shaft assembly (Fig. 19).

4. Slide the blade out from between the rotor halves (Fig. 19).

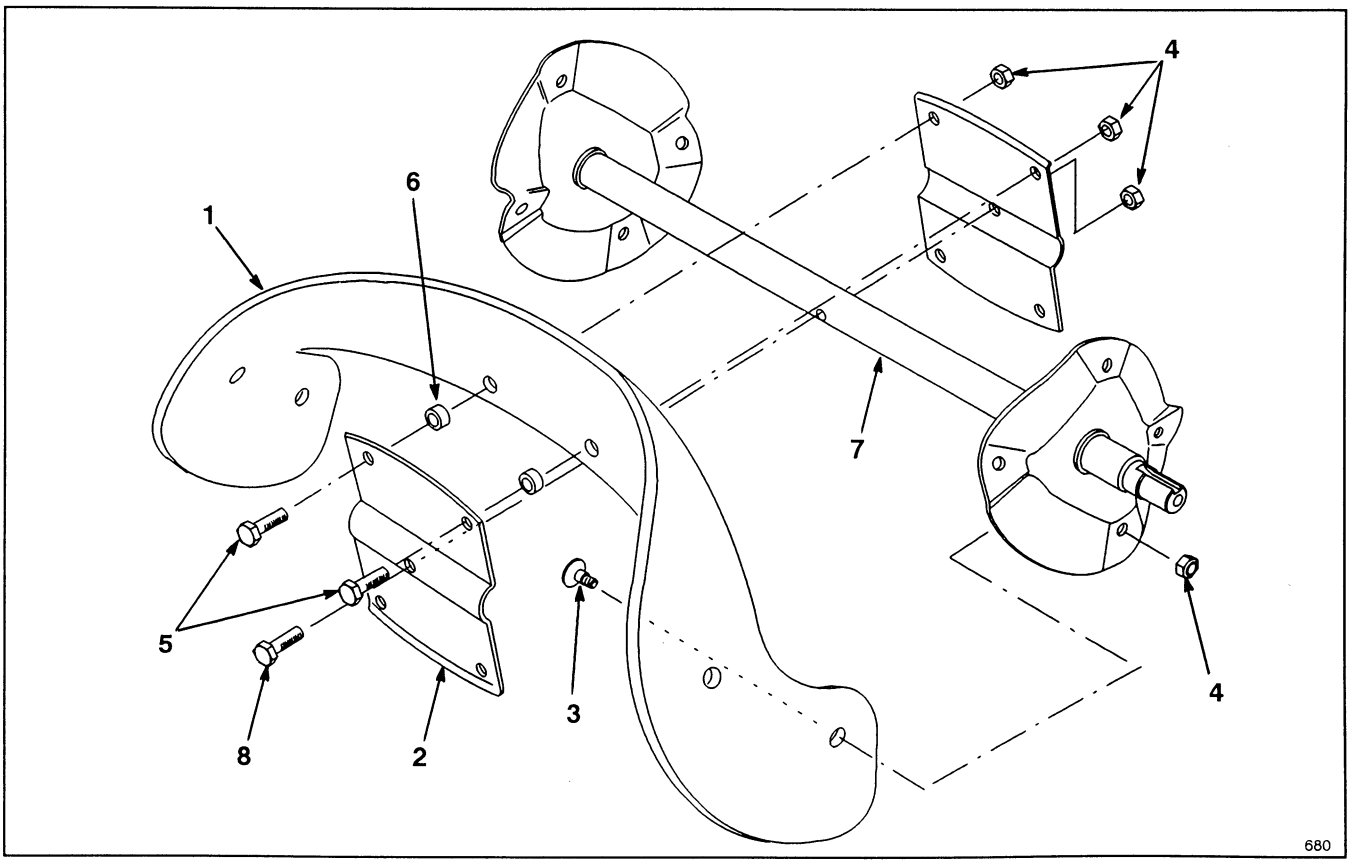

Figure 19

1. Rotor blade (2)
2. Rotor half (2)
3. Torx screw (8)
4. Locknut (13)
5. Hex–head capscrew (4)
6. Spacer (4)
7. Auger shaft assembly
8. Hex–head screw

UPL-56502

MAINTENANCE

Installing New Blade

1. The rotor blades are made of laminated rubber. Examine the edge of a blade to see the difference in layer thicknesses (Fig. 20). (Some blades have a part number on the thick side of the blade.)

Both blades must be installed with the thick layer on the **inside** of the curve. If one blade is installed with the thick layer on the outside of the curve and the other blade installed with the thick layer on the inside of the curve, the blades will be unbalanced, causing the snowthrower to "hop" or "bounce."

2. Insert the new blade between the rotor halves. Secure it to the rotor halves with (2) hex–head capscrews, (2) spacers and (2) locknuts (Fig. 19). Position bolt heads on thick (bottom) side of blade. Curve the blade, and secure it with the remaining (4) torx screws and locknuts (position screw heads on thick side of blade). Tighten all screws and nuts securely.

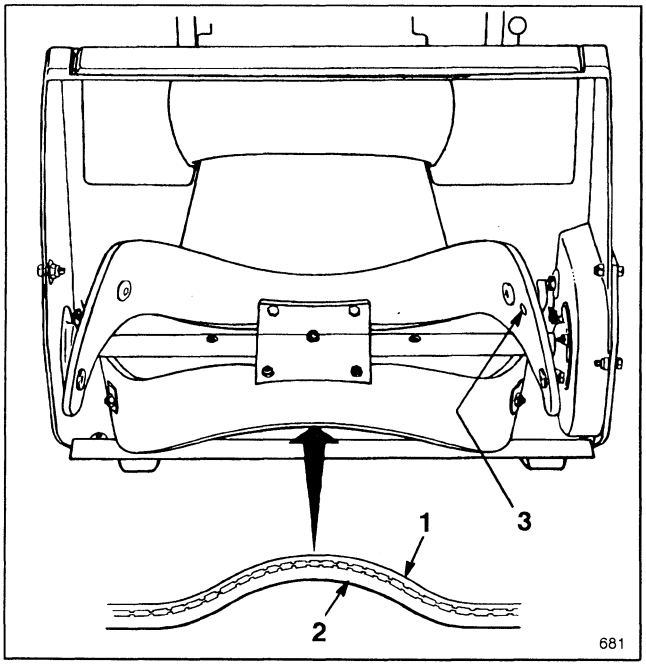

Figure 20

1. Thin side 2. Thick side 3. Wear indicator hole

ADJUSTING CARBURETOR

The carburetor has been factory set, and no adjustment is required. However, when operating snowthrower at altitudes of 5000 feet above sea level or higher, carburetor jets may have to be changed. Contact your local Authorized Toro Service Dealer for assistance.

STORING SNOWTHROWER

1. For long term storage, either drain gasoline from fuel tank or use a fuel stabilizer before storing. To drain gasoline, refer to Draining Gasoline, page 9. After fuel is drained, start engine and let it run until all fuel is consumed and engine stops. Repeat the starting procedure two more times to assure all gas is removed from the engine. If gasoline is not drained, gum–like varnish deposits will form and cause poor engine operation or starting problems. Fuel can be left in gas tank only if a fuel additive, such as Toro's Stabilizer/Conditioner, is added to gasoline and run through engine before storing. Toro's Stabilizer/Conditioner is a petroleum distillate based conditioner/stabilizer. Toro does not recommend stabilizers with an alcohol base, such as ethanol, methanol or isopropyl. Use fuel additive in recommended quantities as specified on container. Under normal conditions, fuel additives remain effective in fuel for 6–8 months.

2. CYLINDER/PISTON CARE—Slowly pull recoil starter until resistance is felt due to compression pressure, then stop. Release starter tension slowly to prevent engine from reversing due to compression pressure. This position closes both the intake and exhaust ports which prevents corrosion of the cylinder bore.

3. TIGHTEN FASTENERS AND CLEAN—Tighten screws, bolts, and nuts if necessary. Repair or replace damaged parts. Clean unit thoroughly.

4. STORE SNOWTHROWER—Cover snowthrower and store in a clean, dry place out of the reach of children. **NEVER STORE SNOWTHROWER IN THE HOUSE OR BASEMENT** where ignition sources may be present such as hot water and space heaters, clothes dryers, and the like. Allow engine to cool before storing in any enclosure..

TORO SERVICE SUPPORT

If help—concerning safety, set–up, operation, maintenance, or troubleshooting—is ever needed, contact the local Authorized TORO Service Dealer or Distributor. Refer to the "Yellow Pages" for assistance. In addition to skilled service technicians, the dealer and distributor have factory approved accessories and replacement parts. Keep your TORO all TORO. Buy genuine TORO replacement parts and accessories.

PRODUCT IDENTIFICATION

A model and a serial number decal is located on the rear cross member, above the axle. Always refer to specific numbers on the decal in correspondence or when replacement parts are needed.