Form No. 3459-808 Rev A

TORO®

Count on it.

Operator's Manual

81cm (32in), 91cm (36in), or 122cm (48in) Mid-Size Rear-Discharge Deck

Model No. 02710—Serial No. 410000000 and Up
Model No. 02711—Serial No. 410000000 and Up
Model No. 02712—Serial No. 410000000 and Up

Register at www.Toro.com.
Original Instructions (EN)

CE UK CA

3459-808

This product complies with all relevant European directives; for details, please see the separate product specific Declaration of Conformity (DOC) sheet.

Introduction

This rotary-blade lawn cutting deck is mounted to a ride-on machine and is intended to be used by professional, hired operators in commercial applications. It is primarily designed for cutting grass on well-maintained lawns in parks, sports fields, and on commercial grounds.

Read this information carefully to learn how to operate and maintain your product properly and to avoid injury and product damage. You are responsible for operating the product properly and safely.

Visit www.Toro.com for product safety and operation training materials, accessory information, help finding a dealer, or to register your product.

Whenever you need service, genuine Toro parts, or additional information, contact an Authorized Service Dealer or Toro Customer Service and have the model and serial numbers of your product ready. Figure 1 identifies the location of the model and serial numbers on the product. Write the numbers in the space provided.

Important: **With your mobile device, you can scan the QR code on the serial number decal (if equipped) to access warranty, parts, and other product information.**

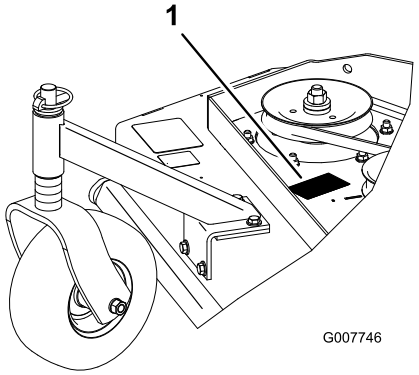

g007746

Figure 1

1. Model and serial number location

Model No. _____

Serial No. _____

This manual uses 2 words to highlight information. **Important** calls attention to special mechanical information and **Note** emphasizes general information worthy of special attention.

The safety-alert symbol (Figure 2) appears both in this manual and on the machine to identify important safety messages that you must follow to avoid accidents. This symbol will appear with the word **Danger**, **Warning**, or **Caution**.

- **Danger** indicates an imminently hazardous situation which, if not avoided, **will** result in death or serious injury.
- **Warning** indicates a potentially hazardous situation which, if not avoided, **could** result in death or serious injury.
- **Caution** indicates a potentially hazardous situation which, if not avoided, **may** result in minor or moderate injury.



sa-black

Figure 2

Safety-alert symbol

Contents

Safety 3
General Safety 3
Cutting Unit Safety 3
Safety and Instructional Decals 4
Product Overview 5
Specifications 5
Attachments/Accessories 5
Operation 6
Adjusting the Height of Cut 6
Height-of-Cut Chart 8
Maintenance 9
Recommended Maintenance Schedule(s) 9
Lubrication 10
Lubricating the Caster and Wheel Bearings 10
Greasing the Mower-Belt Idler 10
Greasing the Mower Deck 10
Belt Maintenance 11
Checking the Belts 11
Replacing the Mower Belt 11
Adjusting the Mower Belt Tension 11
Mower Deck Maintenance 14
Blade Safety 14
Servicing the Cutting Blades 14
Adjusting the Blade Brake 16
Storage 16

© 2022—The Toro® Company

8111 Lyndale Avenue South
Bloomington, MN 55420

Contact us at www.Toro.com.

Printed in the USA

All Rights Reserved

Safety

This machine has been designed in accordance with EN ISO 5395.

General Safety

This product is capable of amputating hands and feet and of throwing objects. Always follow all safety instructions to avoid serious personal injury.

- Read, understand, and follow the instructions and warnings in this *Operator's Manual* and on the machine and attachments before starting the engine.
- Do not put your hands or feet near moving parts of or under the machine. Keep clear of any discharge opening.
- Do not operate the machine without all guards and other safety protective devices in place and functioning properly on the machine.
- Keep bystanders and children out of the operating area. Do not allow children to operate the machine. Allow only people who are responsible, trained, familiar with the instructions, and physically capable to operate the machine.
- Stop the machine, shut off the engine, remove the ignition key (if equipped), and wait for all moving parts to stop before servicing, fueling, or unclogging the machine.

Improperly using or maintaining this machine can result in injury. To reduce the potential for injury, comply with these safety instructions and always pay attention to the safety-alert symbol ⚠, which means Caution, Warning, or Danger—personal safety instruction. Failure to comply with these instructions may result in personal injury or death.

Cutting Unit Safety

- The cutting unit is only a complete machine when installed on a traction unit. Read the traction unit *Operator's Manual* carefully for complete instructions on the safe use of the machine.
- Stop the machine, remove the key, and wait for all moving parts to stop before inspecting the attachment after striking an object or if there is an abnormal vibration in the machine. Make all necessary repairs before resuming operation.
- Keep all parts in good working condition and all hardware tightened. Replace all worn or damaged decals.
- Use only accessories, attachments, and replacement parts approved by Toro.

Safety and Instructional Decals

Safety decals and instructions are easily visible to the operator and are located near any area of potential danger. Keep safety signs clear and visible, replace any decal that is damaged or missing.

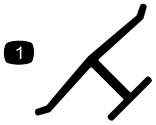

decaloemmarkt

Manufacturer's Mark

1. Indicates the blade is identified as a part from the original machine manufacturer.

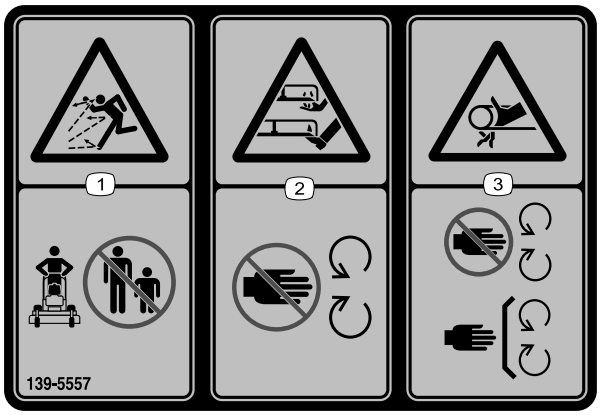

decal139-5557

139-5557

1. Thrown object hazard—keep bystanders away.
2. Cutting/dismemberment hazard of hand or foot, mower blade—stay away from moving parts.
3. Entanglement hazard, belt—stay away from moving parts; keep all guards and shields in place.

Product Overview

Specifications

Note: Specifications and design are subject to change without notice.

81 cm (32 inch) mower decks:

Cutting width	81 cm (32 inches)
Width	89 cm (35 inches)
Length	203 cm (80 inches)
Height	112 cm (44 inches)
Weight	231 kg (509 lb)

91 cm (36 inch) mower decks:

Cutting width	91 cm (36 inches)
Width	94 cm (37 inches)
Length	203 cm (80 inches)
Height	112 cm (44 inches)
Weight	232 kg (511 lb)

122 cm (48 inch) mower decks:

Cutting width	122 cm (48 inches)
Width	126 cm (49-1/2 inches)
Length	194 cm (76-1/2 inches)
Height	112 cm (44 inches)
Weight	248 kg (547 lb)

Attachments/Accessories

A selection of Toro approved attachments and accessories is available for use with the machine to enhance and expand its capabilities. Contact your Authorized Service Dealer or Distributor or go to www.Toro.com for a list of all approved attachments and accessories.

To ensure optimum performance and continued safety certification of the machine, use only genuine Toro replacement parts and accessories. Replacement parts and accessories made by other manufacturers could be dangerous, and such use could void the product warranty.

Operation

Adjusting the Height of Cut

You can adjust the height of cut from 26 to 108 mm (1 to 4-1/4 inches) in 6 mm (1/4 inch) increments. You can achieve this by adjusting the blade spacers, rear axle height, or front caster spacers. Use the Height-of-Cut Chart (page 8) to select the combination of adjustments required.

Adjusting the Blade Height

Adjust the blades by using the 4 spacers (6 mm or 1/4 inch) on the blade spindle bolts. This allows for a 25 mm (1 inch) adjustment range, in 6 mm (1/4 inch) increments, of cutting height in any axle position. Use the same number of blade spacers on all the blades to achieve a level cut (for example, 2 above and 2 below, 1 above and 3 below, etc.).

1. Park the machine on a level surface, disengage the PTO, and engage the parking brake.
2. Shut off the engine, remove the key, and wait for all moving parts to stop before leaving the operating position.
3. Hold the blade bolt and remove the nut (Figure 3).

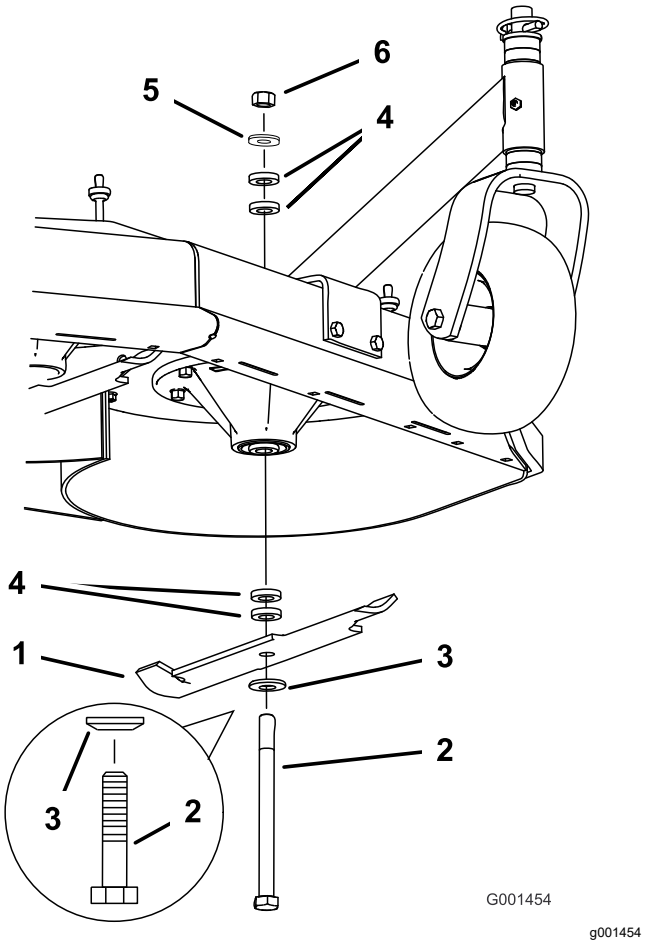

Figure 3

1. Blade
2. Blade bolt
3. Curved washer
4. Spacer
5. Thin washer
6. Nut

4. Remove the blade bolt from the spindle and change the spacers as needed (Figure 3).
5. Install the blade bolt, curved washer, and extra spacers, and secure them with a thin washer and a nut (Figure 3).
6. Torque the blade bolt to 101 to 108 N·m (75 to 80 ft-lb).

Adjusting the Axle Height

Adjust the axle position to the selected height-of-cut setting. Refer to Height-of-Cut Chart (page 8).

1. Park the machine on a level surface, disengage the PTO, and engage the parking brake.
2. Shut off the engine, remove the key, and wait for all moving parts to stop before leaving the operating position.
3. Place a jack under the engine frame. Raise the back end of the engine frame enough to remove the drive wheels.
4. Remove the drive wheels.
5. Loosen, but do not remove, the 2 top axle bolts (Figure 4).
6. Remove the 2 lower axle bolts (Figure 4).

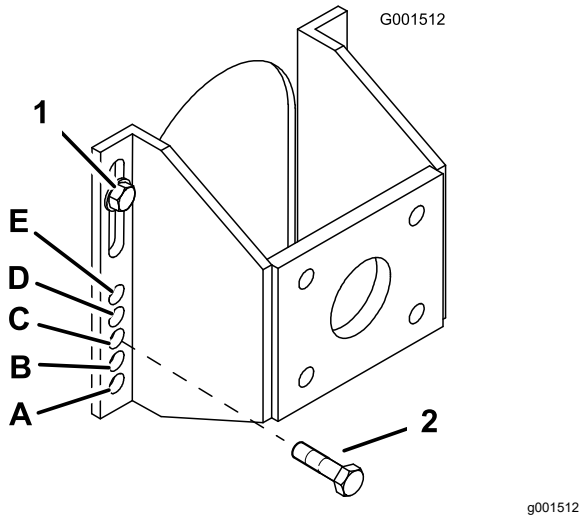

Figure 4

1. Top axle bolt
2. Lower axle bolt

7. Raise or lower the mounting bracket, so that you can install the 2 axle adjustment bolts in the desired hole location (Figure 4).

   Note: A tapered punch can be used to help align the holes.
8. Tighten all 4 bolts.
9. Install the drive wheels and lower the machine.

Adjusting the Caster Position

1. Using the Height-of-Cut Chart (page 8), adjust the caster spacers to match with the axle hole selected (Figure 5).

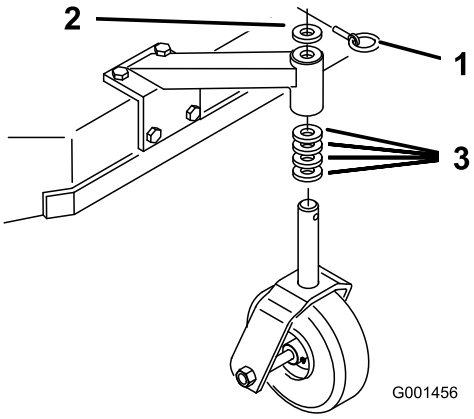

Figure 5

1. Latch pin
2. Spacer (5 mm or 3/16 inch)
3. Spacer (13 mm or 1/2 inch)

2. Remove the latch pin, slide the caster from the support, and change the spacers (Figure 5).
3. Install the caster in the support and insert the latch pin (Figure 5).

Height-of-Cut Chart

Axle position	Number of spacers below the caster		Number of 1/4-inch blade spacers below the spindle				
	13 mm (1/2 inch)	5 mm (3/16 inch)	4	3	2	1	0
A	0	0	26 mm (1 inch)	32 mm (1-1/4 inches)	38 mm (1-1/2 inches)	45 mm (1-3/4 inches)	51 mm (2 inches)
A	0	1	29 mm (1-1/8 inches)	35 mm (1-3/8 inches)	41 mm (1-5/8 inches)	48 mm (1-7/8 inches)	54 mm (2-1/8 inches)
A	1	0	35 mm (1-3/8 inches)	41 mm (1-5/8 inches)	48 mm (1-7/8 inches)	54 mm (2-1/8 inches)	60 mm (2-3/8 inches)
B	0	1	35 mm (1-3/8 inches)	41 mm (1-5/8 inches)	48 mm (1-7/8 inches)	54 mm (2-1/8 inches)	60 mm (2-3/8 inches)
B	1	0	41 mm (1-5/8 inches)	48 mm (1-7/8 inches)	54 mm (2-1/8 inches)	60 mm (2-3/8 inches)	67 mm (2-5/8 inches)
B	1	1	45 mm (1-3/4 inches)	51 mm (2 inches)	57 mm (2-1/4 inches)	64 mm (2-1/2 inches)	70 mm (2-3/4 inches)
B	2	0	51 mm (2 inches)	57 mm (2-1/4 inches)	64 mm (2-1/2 inches)	70 mm (2-3/4 inches)	76 mm (3 inches)
C	1	1	48 mm (1-7/8 inches)	54 mm (2-1/8 inches)	60 mm (2-3/8 inches)	67 mm (2-5/8 inches)	73 mm (2-7/8 inches)
C	2	0	55 mm (2-1/8 inches)	60 mm (2-3/8 inches)	67 mm (2-5/8 inches)	73 mm (2-7/8 inches)	79 mm (3-1/8 inches)
C	2	1	57 mm (2-1/4 inches)	64 mm (2-1/2 inches)	70 mm (2-3/4 inches)	76 mm (3 inches)	83 mm (3-1/4 inches)
C	3	0	64 mm (2-1/2 inches)	70 mm (2-3/4 inches)	76 mm (3 inches)	83 mm (3-1/4 inches)	89 mm (3-1/2 inches)
D	2	1	61 mm (2-3/8 inches)	67 mm (2-5/8 inches)	73 mm (2-7/8 inches)	79 mm (3-1/8 inches)	86 mm (3-3/8 inches)
D	3	0	64 mm (2-1/2 inches)	70 mm (2-3/4 inches)	76 mm (3 inches)	82 mm (3-1/4 inches)	89 mm (3-1/2 inches)
D	3	1	70 mm (2-3/4 inches)	76 mm (3 inches)	82 mm (3-1/4 inches)	89 mm (3-1/2 inches)	95 mm (3-3/4 inches)
D	4	0	76 mm (3 inches)	82 mm (3-1/4 inches)	89 mm (3-1/2 inches)	95 mm (3-3/4 inches)	102 mm (4 inches)
E	3	1	73 mm (2-7/8 inches)	79 mm (3-1/8 inches)	86 mm (3-3/8 inches)	92 mm (3-5/8 inches)	98 mm (3-7/8 inches)
E	4	0	79 mm (3-1/8 inches)	86 mm (3-3/8 inches)	92 mm (3-5/8 inches)	98 mm (3-7/8 inches)	105 mm (4-1/8 inches)
E	4	1	82 mm (3-1/4 inches)	89 mm (3-1/2 inches)	95 mm (3-3/4 inches)	102 mm (4 inches)	108 mm (4-1/4 inches)

Maintenance

Note: Determine the left and right sides of the machine from the normal operating position.

⚠ WARNING

If you raise the machine using only a jack to support it while you work under the cutting unit, the jack could tip, causing the mower deck to fall, crushing you or bystanders.

Always secure the machine with at least 2 jack stands when you have the mower deck raised.

Recommended Maintenance Schedule(s)

Maintenance Service Interval	Maintenance Procedure
After the first 8 hours	• Check the mower belt tension.
After the first 25 hours	• Check the mower belt tension.
Before each use or daily	• Grease the caster wheels and caster pivot. • Inspect the blades. • Clean the mower deck.
Every 50 hours	• Grease the mower-belt idler. • Check the belts. • Check the mower belt tension.
Every 100 hours	• Grease the blade-engagement bellcrank.

Lubrication

Use Figure 6 for locating the grease points on the machine.

Grease type: No. 2 lithium or molybdenum grease

1. Park the machine on a level surface, disengage the PTO, and engage the parking brake.
2. Shut off the engine, remove the key, and wait for all moving parts to stop before leaving the operating position.
3. Clean the grease fittings with a rag. Scrape any paint off the front of the fitting(s).
4. Connect a grease gun to the fitting. Pump grease into the fittings until grease begins to ooze out of the bearings.
5. Wipe up any excess grease.

Lubricating the Caster and Wheel Bearings

Service Interval: Before each use or daily

Lubricate the front wheel bearings and front spindles (Figure 6).

Greasing the Mower-Belt Idler

Service Interval: Every 50 hours

Grease the fitting on the mower-belt idler arm pivot (Figure 6).

Note: Remove the mower deck cover to access the grease fitting for the mower-belt idler arm.

Greasing the Mower Deck

Service Interval: Every 100 hours—Grease the blade-engagement bellcrank.

Grease the blade-engagement (PTO) bellcrank (Figure 6).

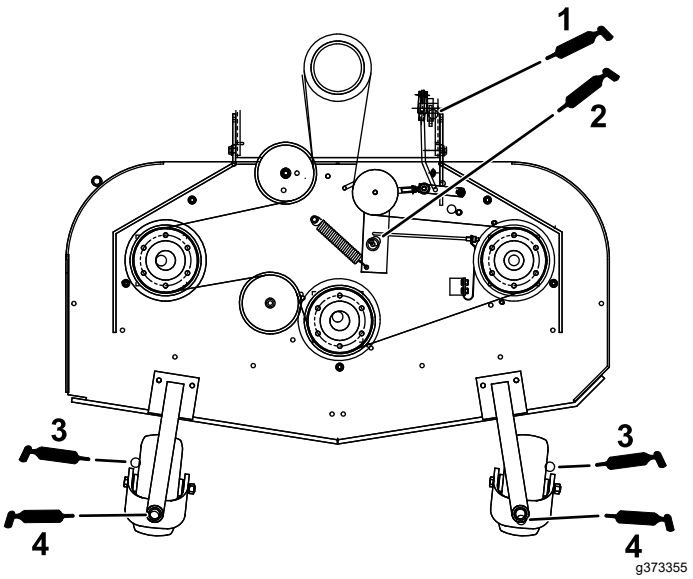

Figure 6

1. Bellcrank
2. Mower belt idler arm
3. Caster wheel bearing
4. Caster pivot

Belt Maintenance

Checking the Belts

Service Interval: Every 50 hours/Monthly (whichever comes first)

Check the belts for squealing when the belt is rotating, blades slipping when cutting grass, frayed belt edges, burn marks and cracks are signs of a worn mower belt. Replace the mower belt if any of these conditions are evident.

Replacing the Mower Belt

1. Park the machine on a level surface, disengage the PTO, and engage the parking brake.
2. Shut off the engine, remove the key, and wait for all moving parts to stop before leaving the operating position.
3. Remove the knobs and the belt cover on the mower deck.
4. Remove the idler pulley and the worn belt (Figure 7).
5. Install the new mower belt.
6. Install the idler pulley.
7. Engage the blade control (PTO) lever and check the belt tension; refer to Adjusting the Mower Belt Tension (page 11).

   Note: The proper mower belt tension is 44 to 67 N (10 to 15 lb) with the belt deflected 13 mm (1/2 inch) halfway between the pulleys (Figure 7).

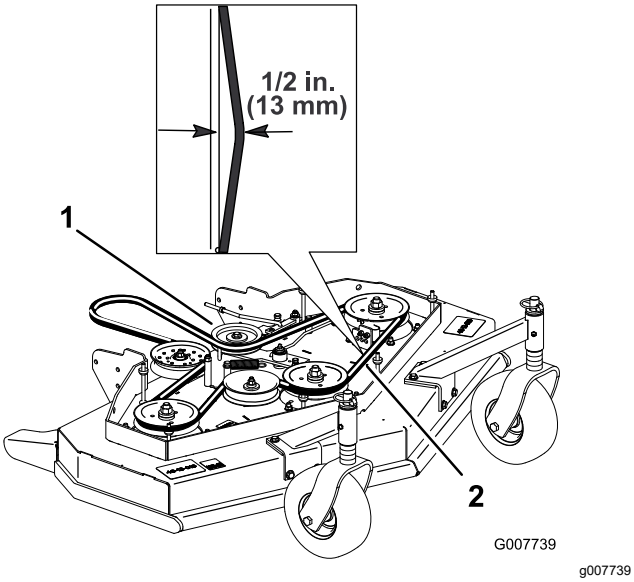

Figure 7

1. Idler pulley
2. Mower belt with 13 mm (1/2 inch) deflection

Adjusting the Mower Belt Tension

Adjusting the Tension

Service Interval: After the first 8 hours

After the first 25 hours

Every 50 hours

Important: **When the belt tension or the brake linkage is adjusted, the brake needs adjustment.**

Important: **The belt must be tight enough to not slip during heavy loads while cutting grass. Overtensioning the belt reduces the spindle bearing life, the belt life and the idler pulley life.**

The belt must be tight enough so it does not slip during heavy loads while cutting grass; overtensioning reduces belt and spindle bearing life.

1. Park the machine on a level surface, disengage the PTO, and engage the parking brake.
2. Shut off the engine, remove the key, and wait for all moving parts to stop before leaving the operating position.
3. Loosen the locknut on the turnbuckle (Figure 8).
4. Rotate the turnbuckle toward the rear of the mower deck to increase the tension on the belt. Rotate the turnbuckle toward the front of the mower deck to decrease the tension on the belt (Figure 8).

   Note: Ensure that the eyebolt threads on both ends of the turnbuckle are engaged a minimum of 8 mm (5/16 inch).

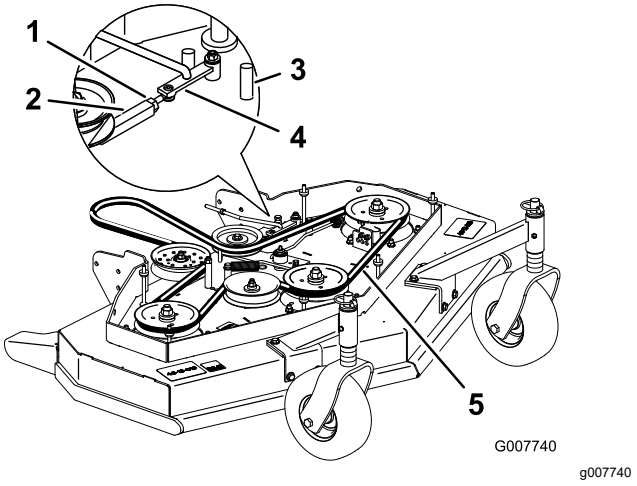

Figure 8

1. Locknut
2. Turnbuckle
3. Front stop
4. Assist arm
5. 13 mm (1/2 inch) deflection here

5. Engage the PTO and check the belt tension.
6. If there is no adjustment left in the turnbuckle and the belt is still loose, position the rear idler pulley in the middle or front hole (Figure 9). Use the hole that gives the correct adjustment.
7. When the idler pulley is moved, the belt guide must be moved. Move the belt guide to the front position (Figure 9).

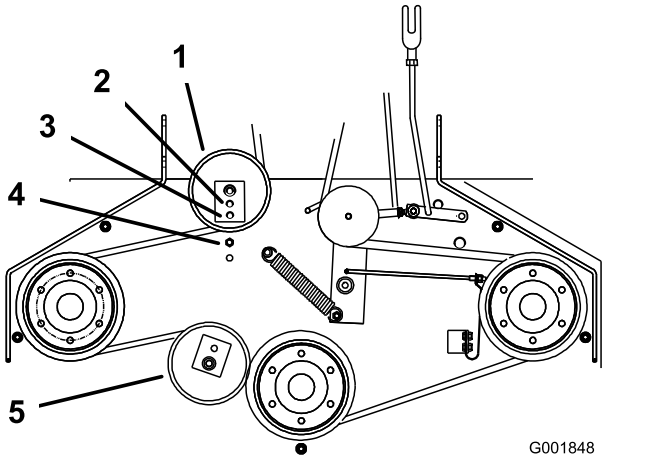

Figure 9

1. Rear idler pulley
2. Middle hole
3. Front hole
4. Belt guide in back position
5. Front idler pulley (122 cm (48 inch) mower deck only)

8. Check the belt guide under the engine frame for proper adjustment (Figure 10).

   Note: When the mower belt is engaged, ensure that the distance between the belt guide and the mower belt is 19 mm (3/4 inch) (Figure 10). Adjust the mower belt guide as necessary. The disengaged belt should not drag or fall off the pulley when the guides are properly adjusted.

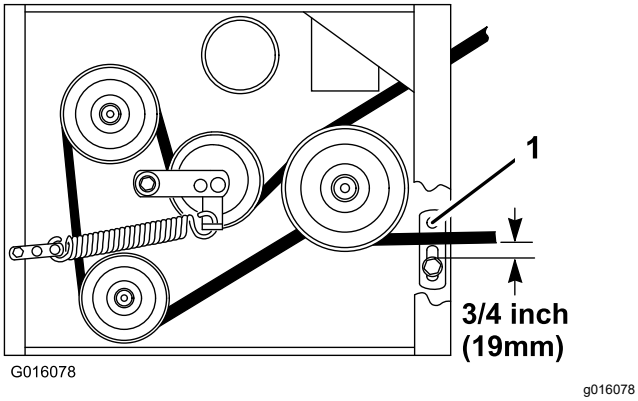

Figure 10

1. Belt guide

9. Check the blade brake adjustment; refer to Adjusting the Blade Brake (page 16).

Adjusting the PTO Engagement Linkage

The PTO engagement linkage adjustment is located beneath the front left hand corner of the engine deck.

1. Park the machine on a level surface, disengage the PTO, and engage the parking brake.
2. Shut off the engine, remove the key, and wait for all moving parts to stop before leaving the operating position.
3. Engage the PTO.
4. Adjust the linkage length to where the lower end of the bellcrank just clears the axle support gusset (Figure 11).

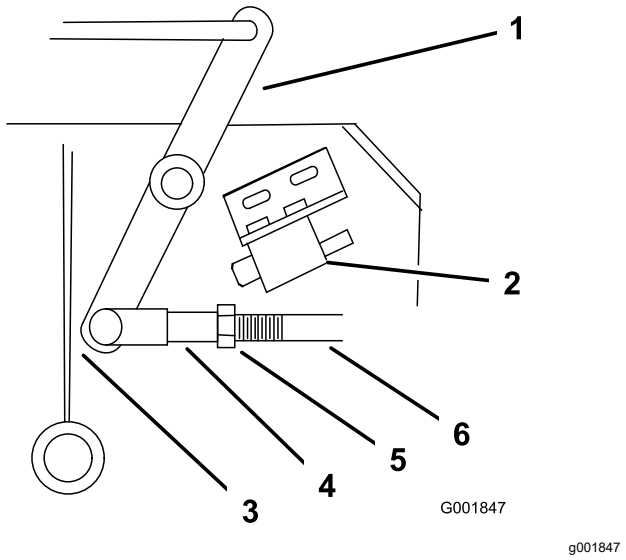

Figure 11

1. Bellcrank
2. Safety switch located under engine deck
3. Bellcrank just clears the gusset with the PTO engageded
4. Yoke
5. Nut
6. Assist arm link

5. Make sure that the assist arm is against the rear assist arm stop on the deck (Figure 12).
6. Push the blade control knob (PTO) down to the DISENGAGED position.
7. The assist arm should contact the front assist arm stop on the deck. If it does not contact, adjust the bellcrank so it is closer to the gusset (Figure 12).

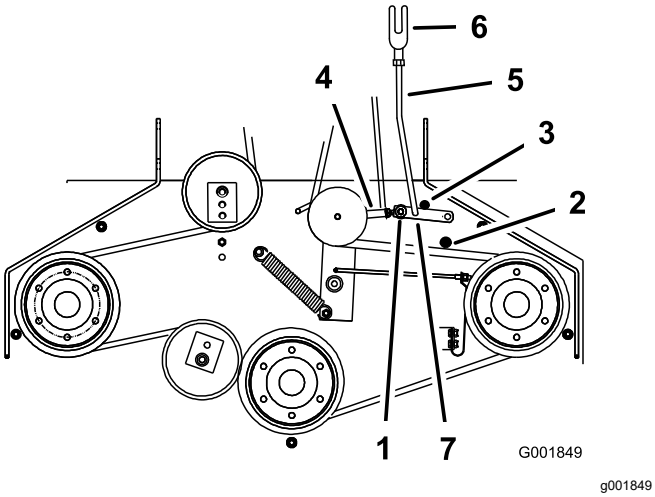

Figure 12

1. Assist arm
2. Front assist arm stop
3. Rear assist arm stop
4. Turnbuckle
5. Assist arm link
6. Yoke
7. Hairpin cotter

8. To adjust the assist arm link, remove the hairpin cotter from the assist arm (Figure 12).
9. Loosen the nut against the yoke (Figure 11).
10. Remove the assist arm link from the assist arm and rotate the link to adjust the length.
11. Install the assist arm link into the assist arm and secure it with the hairpin cotter (Figure 12).
12. Check if the assist arm hits against the stops correctly.

Adjusting the PTO Safety Switch

1. Park the machine on a level surface, disengage the PTO, and engage the parking brake.
2. Shut off the engine, remove the key, and wait for all moving parts to stop before leaving the operating position.
3. Disengage the PTO. Make sure that the assist arm is against the front assist stop arm.
4. If needed, adjust the blade safety switch by loosening the bolts holding the switch bracket (Figure 13).
5. Move the mounting bracket until the bellcrank presses the plunger by 6 mm (1/4 inch).

   Make sure that the bellcrank **does not** touch the switch body or damage to the switch could occur (Figure 13).
6. Tighten the switch mounting bracket.

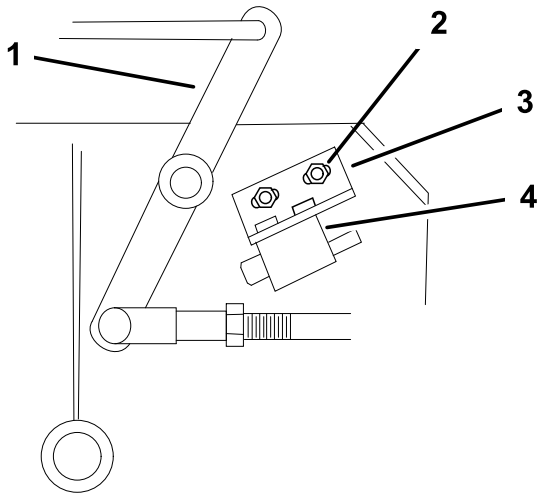

Figure 13

1. Bellcrank
2. Bolts and nuts
3. Switch mounting bracket
4. Switch body

Mower Deck Maintenance

Blade Safety

A worn or damaged blade can break and a piece could be thrown toward you or bystanders, resulting in serious personal injury or death.

- Inspect the blades periodically for excessive wear or damage.
- Use care when checking the blades. Wear gloves and use caution when servicing them. Only replace the blades; never straighten or weld them.
- On multi-bladed machines, take care as rotating 1 blade can cause other blades to rotate.

Servicing the Cutting Blades

To ensure a superior quality of cut, keep the blades sharp. For convenient sharpening and replacement, keep extra blades on hand.

Before Inspecting or Servicing the Blades

1. Park the machine on a level surface, disengage the PTO, and engage the parking brake.
2. Shut off the engine, remove the key, and disconnect the spark-plug wires from the spark plugs.

Inspecting the Blades

Service Interval: Before each use or daily

1. Inspect the cutting edges (Figure 14).
2. If the edges are not sharp or have nicks, remove and sharpen the blade; refer to Sharpening the Blades (page 15).
3. Inspect the blades, especially in the curved area.
4. If you notice any cracks, wear, or a slot forming in this area, immediately install a new blade (Figure 14).

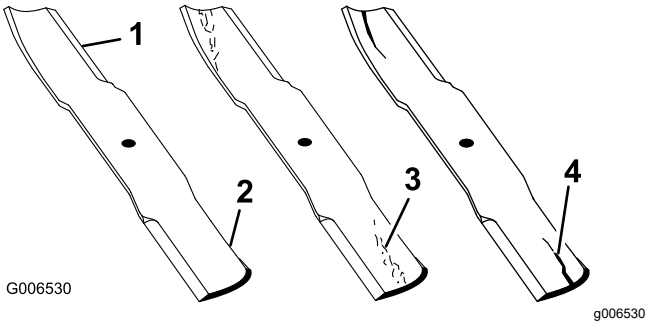

Figure 14

1. Cutting edge
2. Curved area
3. Wear/slot forming
4. Crack

Checking for Bent Blades

1. Rotate the blades until the ends face forward and backward.
2. Measure from a level surface to the cutting edge, position **A**, of the blades (Figure 15).

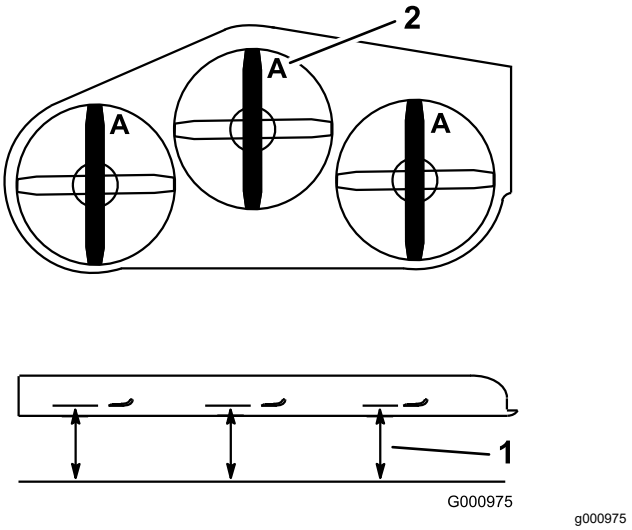

Figure 15

1. Measure here from blade to hard surface
2. Position A

3. Rotate the opposite ends of the blades forward.
4. Measure from a level surface to the cutting edge of the blades at the same position as in step 2 above.

   Note: The difference between the dimensions obtained in steps 2 and 4 must not exceed 3 mm (1/8 inch).

   Note: If this dimension exceeds 3 mm (1/8 inch), the blade is bent and must be replaced.

Removing the Blades

Replace the blades if you hit a solid object or if the blades are out of balance or bent. To ensure optimum performance and continued safety conformance of the machine, use genuine Toro replacement blades. Replacement blades made by other manufacturers may result in non-conformance with safety standards.

1. Hold the blade bolt with a wrench.
2. Remove the nut, blade bolt, curved washer, blade, spacers, and thin washer from the spindle (Figure 16).

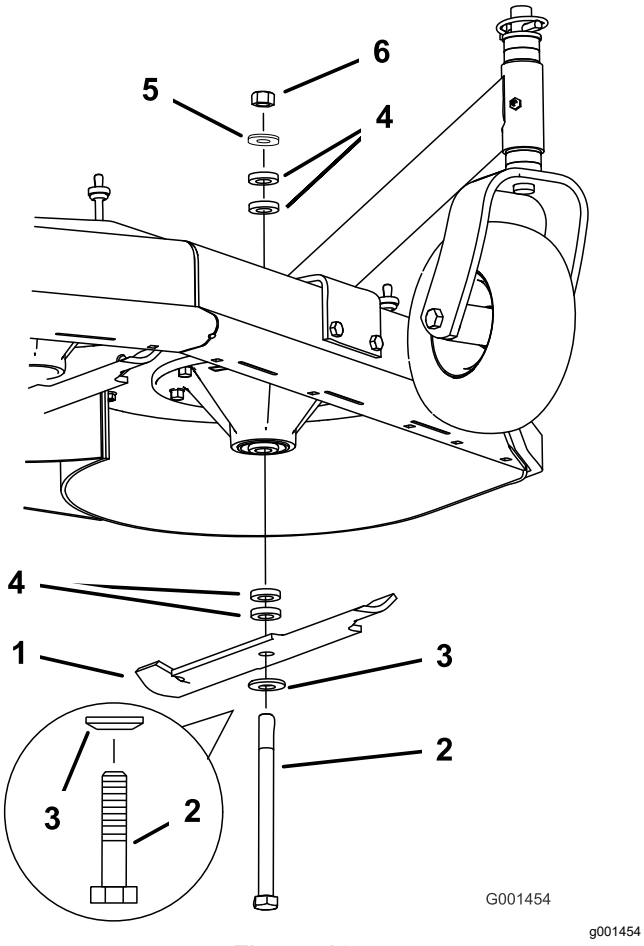

Figure 16

1. Blade
2. Blade bolt
3. Curved washer
4. Spacer
5. Thin washer
6. Nut

Sharpening the Blades

1. Use a file to sharpen the cutting edge at both ends of the blade (Figure 17).

   Note: Maintain the original angle.

   Note: The blade retains its balance if the same amount of material is removed from both cutting edges.

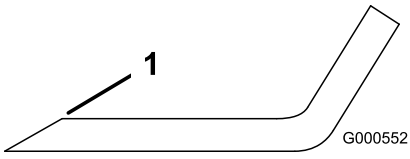

Figure 17

1. Sharpen at original angle.

2. Check the balance of the blade by putting it on a blade balancer (Figure 18).

   Note: If the blade stays in a horizontal position, the blade is balanced and can be used.

   Note: If the blade is not balanced, file some metal off the end of the sail area only (Figure 17).

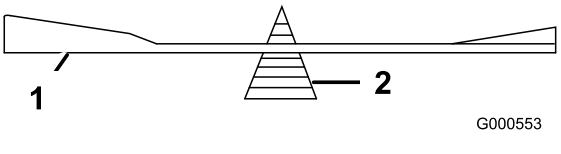

Figure 18

1. Blade
2. Balancer

3. Repeat this procedure until the blade is balanced.

Installing the Blades

1. Install the bolt, curved washer, and blade. Select the proper number of spacer(s) for the height of cut, and slide the bolt into the spindle (Figure 16).

   Important: **The curved part of the blade must point upward toward the inside of the mower deck to ensure proper cutting.**

2. Install the remaining spacer(s) and secure them with a thin washer and a nut (Figure 16).
3. Torque the blade bolt to 75 to 80 N·m (101 to 108 ft-lb).

Adjusting the Blade Brake

1. Park the machine on a level surface, disengage the PTO, and engage the parking brake.
2. Shut off the engine, remove the key, and wait for all moving parts to stop before leaving the operating position.
3. If necessary, adjust the spring mounting bolts so that the blade brake pad rubs against both sides of the pulley groove (Figure 19).
4. Adjust the nut at the end of the blade brake rod until there is 3 to 5 mm (1/8 to 3/16 inch) between the nut and spacer (Figure 19).
5. Engage the blades. Ensure that the blade brake pad no longer contacts the pulley groove.

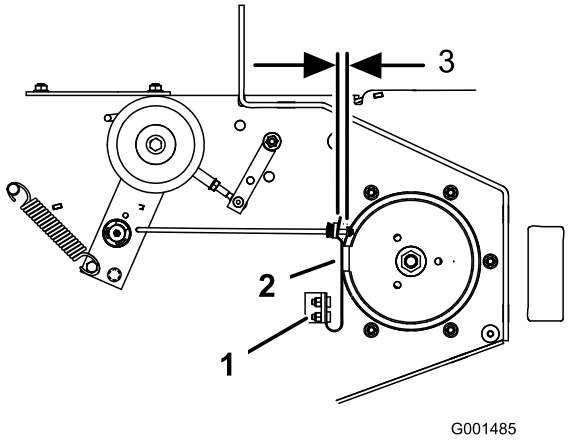

g001485

Figure 19

1. Spring mounting bolts
2. Blade brake pad
3. 3 to 5 mm (1/8 to 3/16 inch)

Storage

1. Park the machine on a level surface, disengage the PTO, and engage the parking brake.
2. Shut off the engine, remove the key, and wait for all moving parts to stop before leaving the operating position.
3. Allow the engine to cool before adjusting, cleaning, storing, or repairing the machine.
4. Thoroughly clean the mower deck, paying special attention to these areas:
   - Underneath the mower deck
   - Under the mower deck belt covers
   - PTO shaft assembly
   - All grease fittings and pivot points
5. Remove, sharpen, and balance the mower deck blades. Install the blades and torque the blade fasteners to 75 to 80 N·m (101 to 108 ft-lb).
6. Check all fasteners for looseness and tighten them as necessary.
7. Grease or oil all grease fittings and pivot points. Wipe off any excess lubricant.
8. Lightly sand and use touch up paint on painted areas that are scratched, chipped or rusted. Repair any dents.

Declaration of Incorporation

The Toro Company, 8111 Lyndale Ave. South, Bloomington, MN, USA declares that the following unit(s) conform(s) to the directives listed, when installed in accordance with the accompanying instructions onto certain Toro models as indicated on the relevant Declarations of Conformity.

Model No.	Serial No.	Product Description	Invoice Description	General Description	Directive
02710	—	81cm (32in) Mid-Size Rear-Discharge Deck	82CM (32") MS REAR DISCHARGE DECK	Cutting deck	2006/42/EC
02711	—	91cm (36in) Mid-Size Rear-Discharge Deck	92CM (36") MS REAR DISCHARGE DECK	Cutting deck	2006/42/EC
02712	—	122cm (48in) Mid-Size Rear-Discharge Deck	122CM (48") MS REAR DISCHARGE DECK	Cutting deck	2006/42/EC

Relevant technical documentation has been compiled as required per Part B of Annex VII of 2006/42/EC.

We will undertake to transmit, in response to requests by national authorities, relevant information on this partly completed machinery. The method of transmission shall be electronic transmittal.

This machinery shall not be put into service until incorporated into approved Toro models as indicated on the associated Declaration of Conformity and in accordance with all instructions, whereby it can be declared in conformity with all relevant Directives.

Certified:



Tom Langworthy
Engineering Director
8111 Lyndale Ave. South
Bloomington, MN 55420, USA
November 7, 2022

Authorized Representative:

Marcel Dutrieux
Manager European Product Integrity
Toro Europe NV
Nijverheidsstraat 5
2260 Oevel
Belgium

UK Declaration of Incorporation

The Toro Company, 8111 Lyndale Ave. South, Bloomington, MN, USA declares that the following unit(s) conform(s) to the regulations listed, when installed in accordance with the accompanying instructions onto certain Toro models as indicated on the relevant Declarations of Conformity.

Model No.	Serial No.	Product Description	Invoice Description	General Description	Regulation
02710	—	81cm (32in) Mid-Size Rear-Discharge Deck	82CM (32") MS REAR DISCHARGE DECK	Cutting deck	S.I. 2008 No. 1597
02711	—	91cm (36in) Mid-Size Rear-Discharge Deck	92CM (36") MS REAR DISCHARGE DECK	Cutting deck	S.I. 2008 No. 1597
02712	—	122cm (48in) Mid-Size Rear-Discharge Deck	122CM (48") MS REAR DISCHARGE DECK	Cutting deck	S.I. 2008 No. 1597

Relevant technical documentation has been compiled as required per Schedule 10 of S.I. 2008 No. 1597.

We will undertake to transmit, in response to requests by national authorities, relevant information on this partly completed machinery. The method of transmission shall be electronic transmittal.

This machinery shall not be put into service until incorporated into approved Toro models as indicated on the associated Declaration of Conformity and in accordance with all instructions, whereby it can be declared in conformity with all relevant Regulations.

This declaration has been issued under the sole responsibility of the manufacturer.
The object of the declaration is in conformity with relevant UK legislation.



Tom Langworthy
Engineering Director
8111 Lyndale Ave. South
Bloomington, MN 55420, USA
November 7, 2022

Authorized Representative:

Marcel Dutrieux
Manager European Product Integrity
Toro U.K. Limited
Spellbrook Lane West
Bishop's Stortford
CM23 4BU
United Kingdom

EEA/UK Privacy Notice

Toro's Use of Your Personal Information

The Toro Company ("Toro") respects your privacy. When you purchase our products, we may collect certain personal information about you, either directly from you or through your local Toro company or dealer. Toro uses this information to fulfil contractual obligations - such as to register your warranty, process your warranty claim or to contact you in the event of a product recall - and for legitimate business purposes - such as to gauge customer satisfaction, improve our products or provide you with product information which may be of interest. Toro may share your information with our subsidiaries, affiliates, dealers or other business partners in connection these activities. We may also disclose personal information when required by law or in connection with the sale, purchase or merger of a business. We will never sell your personal information to any other company for marketing purposes.

Retention of your Personal Information

Toro will keep your personal information as long as it is relevant for the above purposes and in accordance with legal requirements. For more information about applicable retention periods please contact legal@toro.com.

Toro's Commitment to Security

Your personal information may be processed in the US or another country which may have less strict data protection laws than your country of residence. Whenever we transfer your information outside of your country of residence, we will take legally required steps to ensure that appropriate safeguards are in place to protect your information and to make sure it is treated securely.

Access and Correction

You may have the right to correct or review your personal data, or object to or restrict the processing of your data. To do so, please contact us by email at legal@toro.com. If you have concerns about the way in which Toro has handled your information, we encourage you to raise this directly with us. Please note that European residents have the right to complain to your Data Protection Authority.



Count on it.