Form No. 3327–669

Z147

Z Master® with 112cm Side Discharge Mower

Model No. 74176TE—220000001 and Up

Parts Catalog

Ordering Replacement Parts

To order replacement parts, please supply: the part number, the quantity, and the description of each part desired.

Understanding Reference Numbers

Each identified part in an illustration has a reference number. The reference number for a part also appears in the parts list, along with other information about the part.

This catalog uses two special reference number formats, one to indicate parts in a service assembly and another to indicate the quantity of a given part in an illustration.

Service Assembly Reference Numbers

Parts in service assemblies have reference numbers in the form **a:b.** The **a** represents the reference number of the entire service assembly and the **b** represents a sequential number unique to each part within the service assembly.

For example, a wheel assembly might be identified by reference number **6**, the tire by **6:1**, the valve by **6:2**, and the wheel by **6:3**. When you order the assembly identified by reference number 6, you receive all parts identified by reference numbers 6:1, 6:2, and 6:3. However, you may also order any part individually.

Reference numbers of this type appear in illustrations and in part lists.

Reference Numbers Indicating Quantity

In an illustration, if a reference number indicates more than one part, the reference number has the form **nX y.** The **n** represents the quantity of the part, the **X** is the multiplication symbol, and the **y** represents the reference number.

For example, in an illustration, the reference number **2X 37** means that two of the parts identified by reference number 37 are indicated.

© The TORO Company — 2002
All Rights Reserved

Contents

Description	Page
Front Frame Assembly	4
Height of Cut Assembly	6
Main Frame Assembly	7
Fuel System Assembly	8
Parking Brake System Assembly	9
Motion Control System Assembly	10
Hydraulic System Assembly	11
Pump Idler and Belt Assembly	13
Engine and Clutch Assembly	14
Deck Assembly	15
Deck Spindle Assembly	16
Idler Pulley/Lift Strut, Chain Assembly	17
Recycler Assembly	18
Electrical System Assembly	19
Electrical Schematic	20
Piston/Crankshaft Assembly Kawasaki FH500V–ES10	21
Cylinder/Crankcase Assembly Kawasaki FH500V–ES10	22
Cylinder/Crankcase Assembly Kawasaki FH500V–ES10	23
Valve/Camshaft Assembly Kawasaki FH500V–ES10	24
Valve/Camshaft Assembly Kawasaki FH500V–ES10	25
Carburetor Assembly Kawasaki FH500V–ES10	26
Carburetor Assembly Kawasaki FH500V–ES10	27
Control Equipment Assembly Kawasaki FH500V–ES10	28
Control Equipment Assembly Kawasaki FH500V–ES10	29
Cooling Equipment Assembly Kawasaki FH500V–ES10	30
Cooling Equipment Assembly Kawasaki FH500V–ES10	31
Electric Equipment Assembly Kawasaki FH500V–ES10	32
Electric Equipment Assembly Kawasaki FH500V–ES10	33
Starter Assembly Kawasaki FH500V–ES10	34
Starter Assembly Kawasaki FH500V–ES10	35
Lubrication Equipment Assembly Kawasaki FH500V–ES10	36
Air Filter/Muffler Assembly Kawasaki FH500V–ES10	37
Fuel Tank/Fuel Valve Assembly Kawasaki FH500V–ES10	38
Label Assembly Kawasaki FH500V–ES10	39

Accessories

Description	Model / Part No.
4 Post ROPS Kit	79470
High Suspension Seat	99–8522
Hitch Kit	99–8924
Washout Port Kit	95–3282
Z–Stand Kit	105–1621

Part Description Abbreviations

Part descriptions in this catalog may include the following abbreviations.

Abbreviation	Meaning
AR	as required
ASM	assembly
CARR	carriage
DEG	degrees
FH	flat head
GA	gauge
HF	hex flange
HH	hex head
HHF	hex head flange
HLH	hex lag head
HJ	hex jam
HOC	height-of-cut
HS	hex socket
HSBH	hex socket button head
HSFH	hex socket flat head
HSH	hex socket head
HWH	hex washer head
HWHTF	hex washer head thread forming
INC	incorporated
LH	left hand
NI	nylon insert
PPH	Phillips pan head
PTH	Phillips truss head
PTO	power take off
RH	right hand
SFH	slotted fillister head
SHH	slotted hex head
SQH	square head
SHWH	slotted hex washer head
SPH	slotted pan head
SRH	slotted round head
STD	standard
TAP	self tapping
TTH	Torx truss head
WH	wing head

3327–669

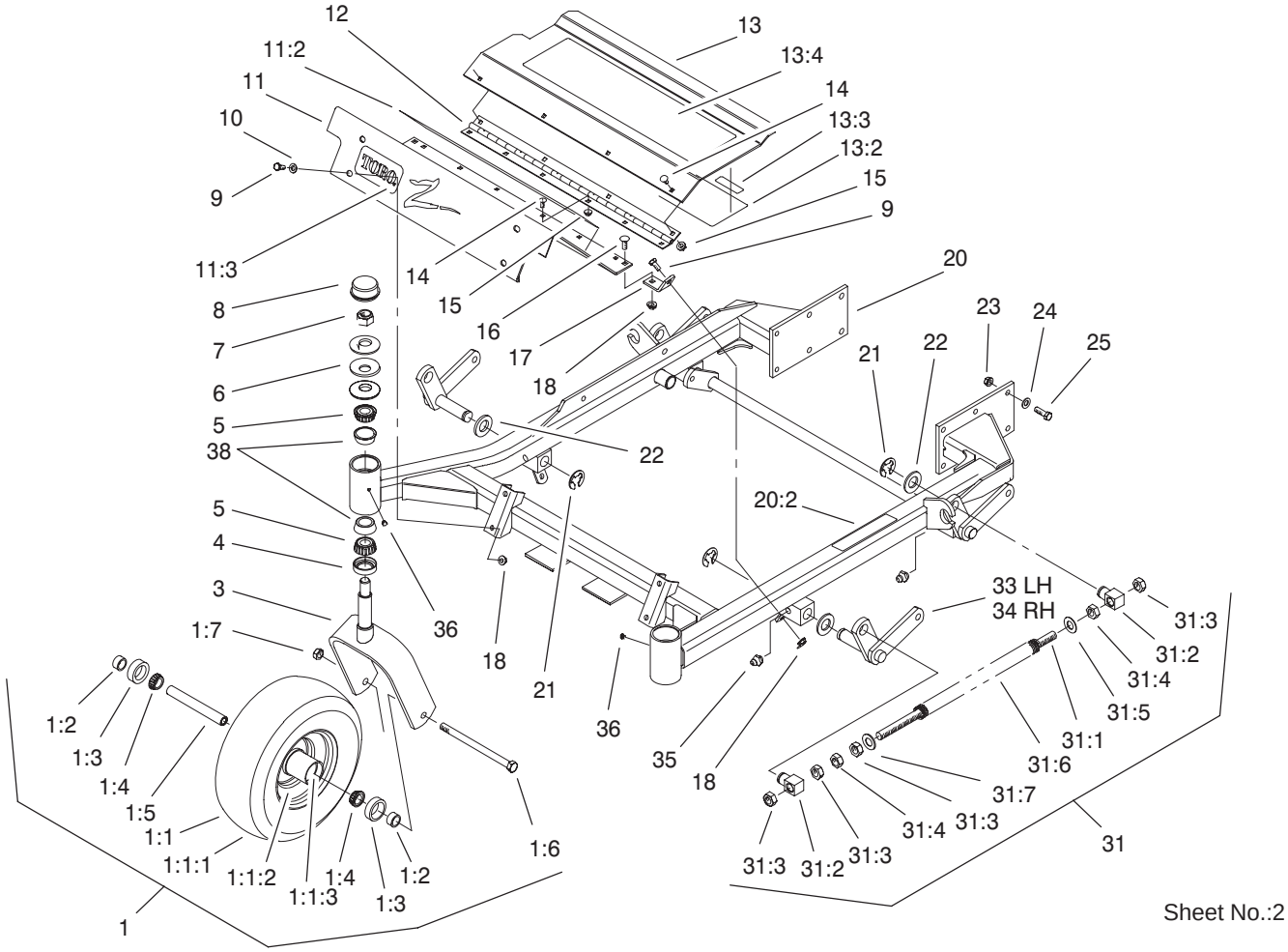

Sheet No.:2

Front Frame Assembly

Ref. No.	Part No.	Qty.	Description
1	1–634662	2	Caster Wheel ASM
1:1	1–633582	1	Wheel & Tire ASM
1:1:1	1–633002	1	Tire
1:1:2	1–633583	1	Wheel
1:1:3	1–633584	2	Bearing–Cup
1:2	1–633581	2	Spacer–Bearing
1:3	1–633580	2	Seal–Bearing
1:4	1–633585	2	Bearing–Cone, Taper
1:5	1–633579	1	Spacer–Caster, Front
1:6	325–36	1	Screw–HH
1:7	3296–45	1	Nut–Lock, NI
3	1–632511–01	2	Caster
4	1–543511	2	Seal–Grease
5	254–94	4	Bearing–Cone, Taper
6	1–633508	6	Washer–Bellville
7	3296–51	2	Nut–Lock, NI
8	1–543513	2	Cap–Grease
9	322–3	6	Screw–HH
10	3256–23	4	Washer–Flat
11	99–3940	1	Floorpan–Front
11:2	1–633553	1	Pad–Antiskid
11:3	1–633737	1	Decal–Z–Master
12	1–653049	1	Hinge–Floorpan
13	100–3957	1	Footrest ASM
13:2	99–8940	1	Decal–Service
13:3	98–1977	1	Decal–Warning

Ref. No.	Part No.	Qty.	Description
13:4	1–633553	1	Pad–Antiskid
14	3229–10	10	Screw–CARR
15	32128–33	10	Nut–HF
16	3230–1	2	Screw–CARR
17	99–3870–01	2	Bracket–Floorpan
18	32128–20	8	Nut–HF
20	100–3958	1	Front Frame ASM
20:2	99–8943	1	Decal–Warning
21	32151–103	6	Ring–Snap
22	3256–29	6	Washer–Flat
23	3290–357	12	Nut–HHF
24	98–5975	12	Washer–Belleville
25	323–7	12	Screw–HH
31	103–1987	2	Front Spring ASM
31:1	1–653011	1	Rod–Lift, Deck
31:2	1–633441	2	Swivel–Deck Mount, Rear
31:3	3217–11	4	Nut–Hex
31:4	3218–6	2	Nut–Jam
31:5	1–805517	1	Washer
31:6	1–653009	1	Spring–Compression
31:7	3256–27	1	Washer–Flat
33	99–3871–01	1	LH Lift Arm ASM
34	99–3872–01	1	RH Lift Arm ASM
35	302–19	4	Fitting–Grease
36	1–811010	2	Plug

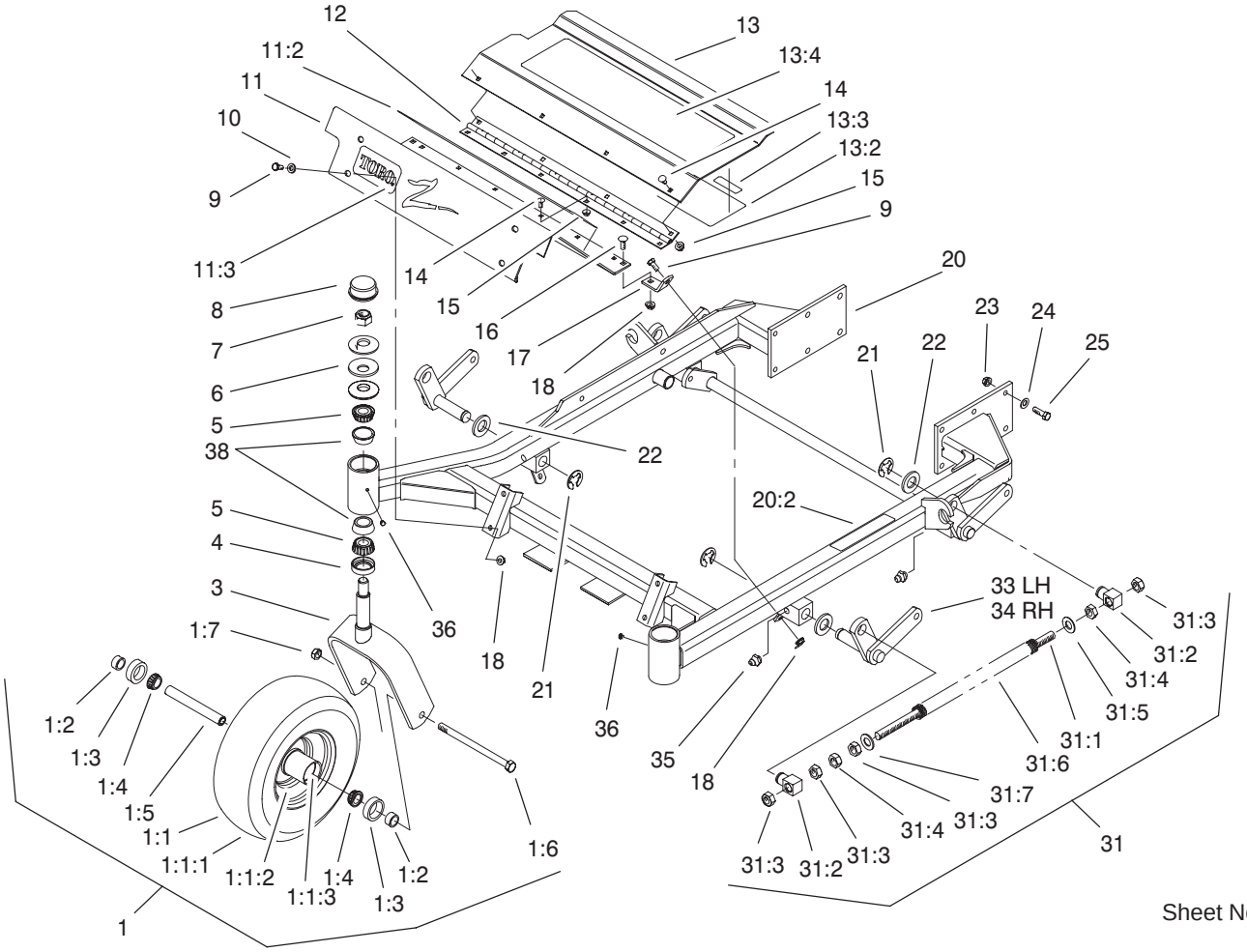

Sheet No.:2

Front Frame Assembly (Continued)

Ref. No.	Part No.	Qty.	Description
38	254–72	4	Bearing–Cup, Tapered

Ref. No.	Part No.	Qty.	Description

3327–669

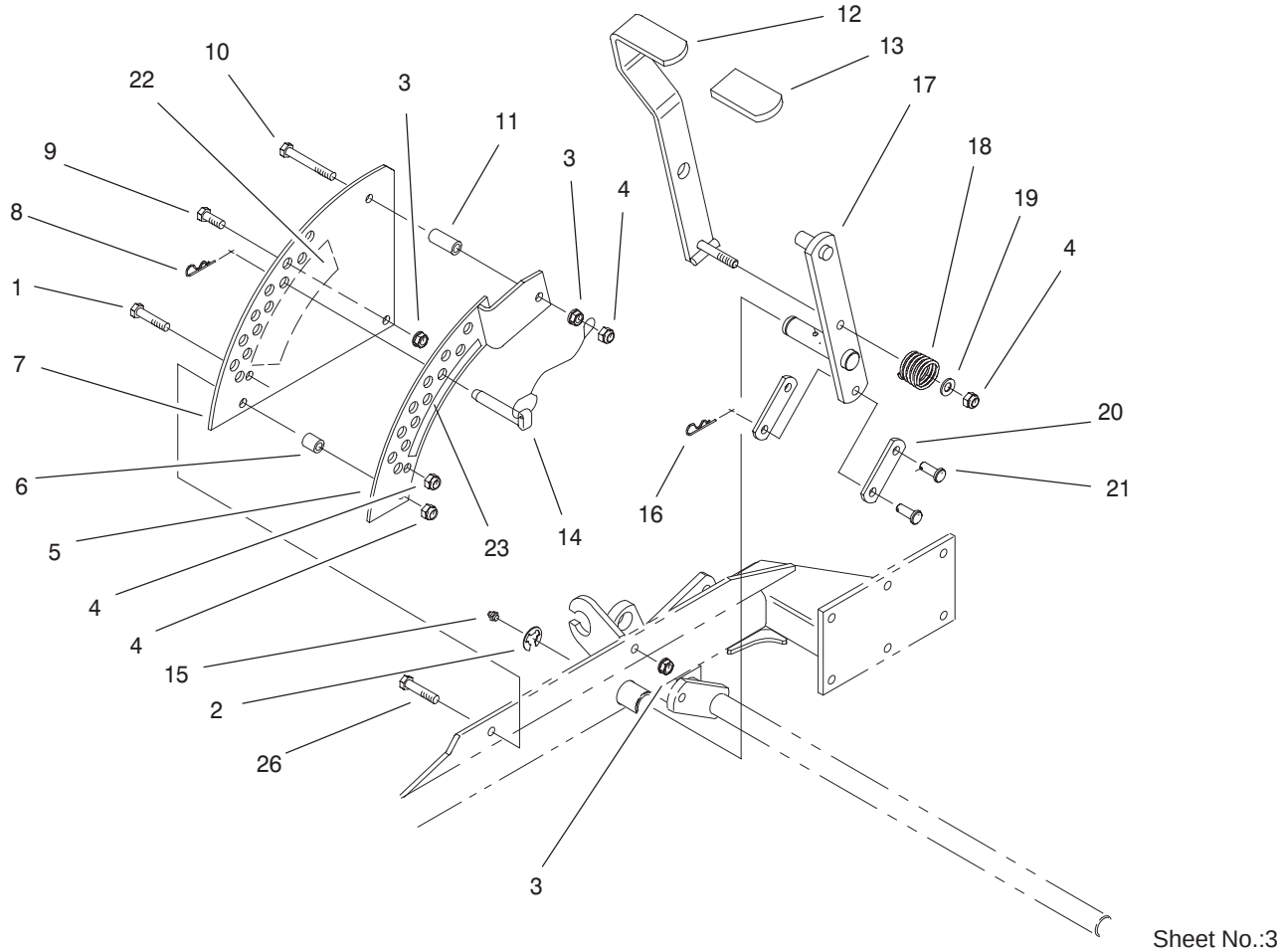

Height of Cut Assembly

Ref. No.	Part No.	Qty.	Description
1	323–9	1	Screw–HH
2	32151–103	1	Ring–Snap
3	3290–357	3	Nut–HHF
4	3296–39	3	Nut–Lock, NI
5	1–652235–01	1	Plate–Lift, Deck
6	1–633080	1	Bushing–Lever, Lift
7	1–653230–01	1	Plate–Lift, Deck
8	1–806005	1	Pin–Hair
9	323–6	1	Screw–HH
10	323–13	1	Screw–HH
11	1–633082	1	Bushing–Lever, Lift
12	103–2078–03	1	Handle–Lift
13	1–633295	1	Grip–Lever, Lift
14	1–633097	1	Pin–Hitch W/Lanyard
15	302–19	1	Fitting–Grease
16	1–806003	2	Pin–Hair
17	99–3922–03	1	Arm–Lift
18	1–633325	1	Spring–Compression
19	3256–24	1	Washer–Flat
20	1–633068	2	Arm–Lift, Deck
21	1–808284	2	Pin–Clevis
22	99–8942	1	Decal–Deck Height, Outer
23	99–8941	1	Decal–Deck Height, Inner
26	323–8	1	Screw–HH

Ref. No.	Part No.	Qty.	Description

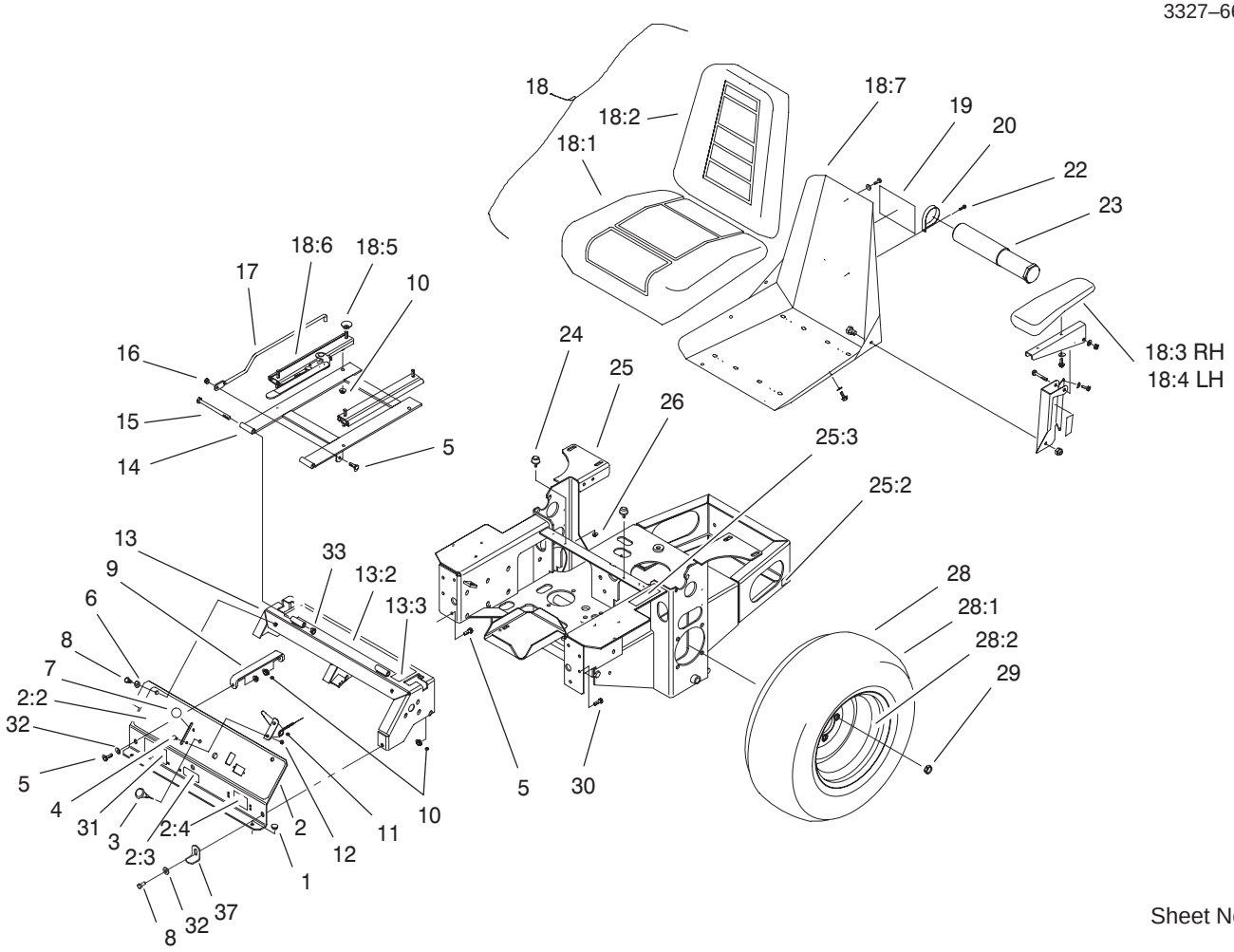

Sheet No.:4

Main Frame Assembly

Ref. No.	Part No.	Qty.	Description
1	1–513658	2	Bumper–Catcher, Grass
2	100–3959	1	Control Panel ASM
2:2	99–8945	1	Decal–Panel, Control
2:3	99–8937	1	Decal–Valve, Fuel
2:4	98–4387	1	Decal–Protection, Ear
3	1–603336	1	Control–Choke
4	1–807513	2	Bolt–CARR
5	322–5	4	Screw–HH
6	3256–23	2	Washer–Flat
7	1–513592	1	Knob–Ball, Red
8	322–3	2	Screw–HH
9	1–653089–03	1	Bracket
10	32128–20	12	Nut–HF
11	1–633696	1	Cable–Throttle
12	3296–2	2	Nut–Lock
13	105–6124	1	Console W/ Decals
13:2	99–8936	2	Decal–Control, Motion
13:3	99–8944	1	Decal–Battery
14	1–632187–03	1	Frame–Seat
15	323–39	2	Screw–HH
16	3296–29	1	Nut–Lock, NI
17	103–1731	1	Rod–Retainer, Seat
18	1–633705	1	Seat W/Tracks
18:1	103–0290	1	Cushion–Bottom, Seat
18:2	104–7754	1	Cushion–Back, Seat

Ref. No.	Part No.	Qty.	Description
18:3	1–633710	1	Cushion–Armrest, RH
18:4	1–633711	1	Cushion–Armrest, LH
18:5	1–543401	4	Spacer–Track
18:6	1–643255	1	Grp–Track, Seat
18:7	1–633859	1	Frame–Seat
19	99–4693	1	Decal–Toro
20	2412–120	2	R–Clamp
22	32104–76	2	Screw
23	74–0720	1	Tube–Manual
24	1–523420	2	Bumper
25	105–6122	1	Main Frame ASM
25:2	93–8069	2	Decal–Surface, Hot
25:3	105–6183	1	Decal – Release, Drive
26	3296–42	2	Nut–Lock, NI
28	1–653010	2	Wheel & Tire ASM
28:1	1–653160	1	Tire
28:2	1–653158	1	Wheel
29	242–50	8	Nut–Lug
30	322–2	6	Screw–HH
31	99–4603	1	Decal–Z147
32	3256–3	2	Washer–Flat
33	3296–39	2	Nut–Lock, NI
37	99–8947–03	1	Stop–Cover

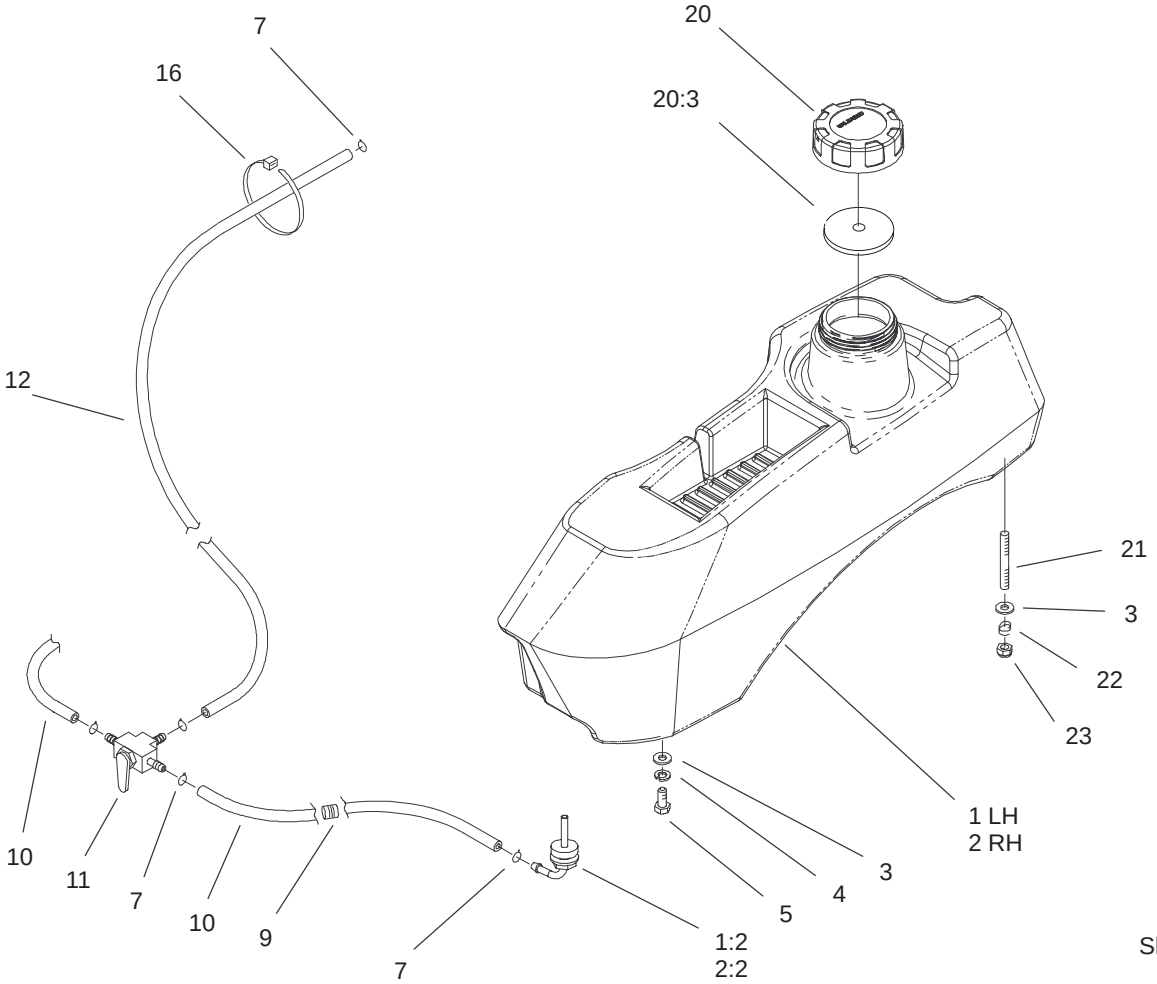

Sheet No.:5

Fuel System Assembly

Ref. No.	Part No.	Qty.	Description
1	105–3625	1	LH Fuel Tank ASM
1:2	103–2605	1	Fitting–Fuel, Bulkhead
2	105–3624	1	RH Fuel Tank ASM
2:2	103–2605	1	Fitting–Fuel, Bulkhead
3	3256–23	8	Washer–Flat
4	1–805005	4	Washer–Lock
5	322–3	4	Screw–HH
7	1–303077	6	Clamp–Line, Fuel
9	1–543296	2	Grommet–Line, Fuel
10	1–543526	2	Hose–Fuel
11	1–633347	1	Valve–Fuel
12	103–0216	1	Hose–Fuel
16	1–303335	1	Tie–Plastic
20	88–3980	2	Gas Cap ASM
20:3	88–4010	1	Gasket–Cap, Gas
21	1–633023	4	Stud
22	1–633349	4	Spring–Tank, Fuel
23	3296–47	4	Nut–Lock, NI

Ref. No.	Part No.	Qty.	Description

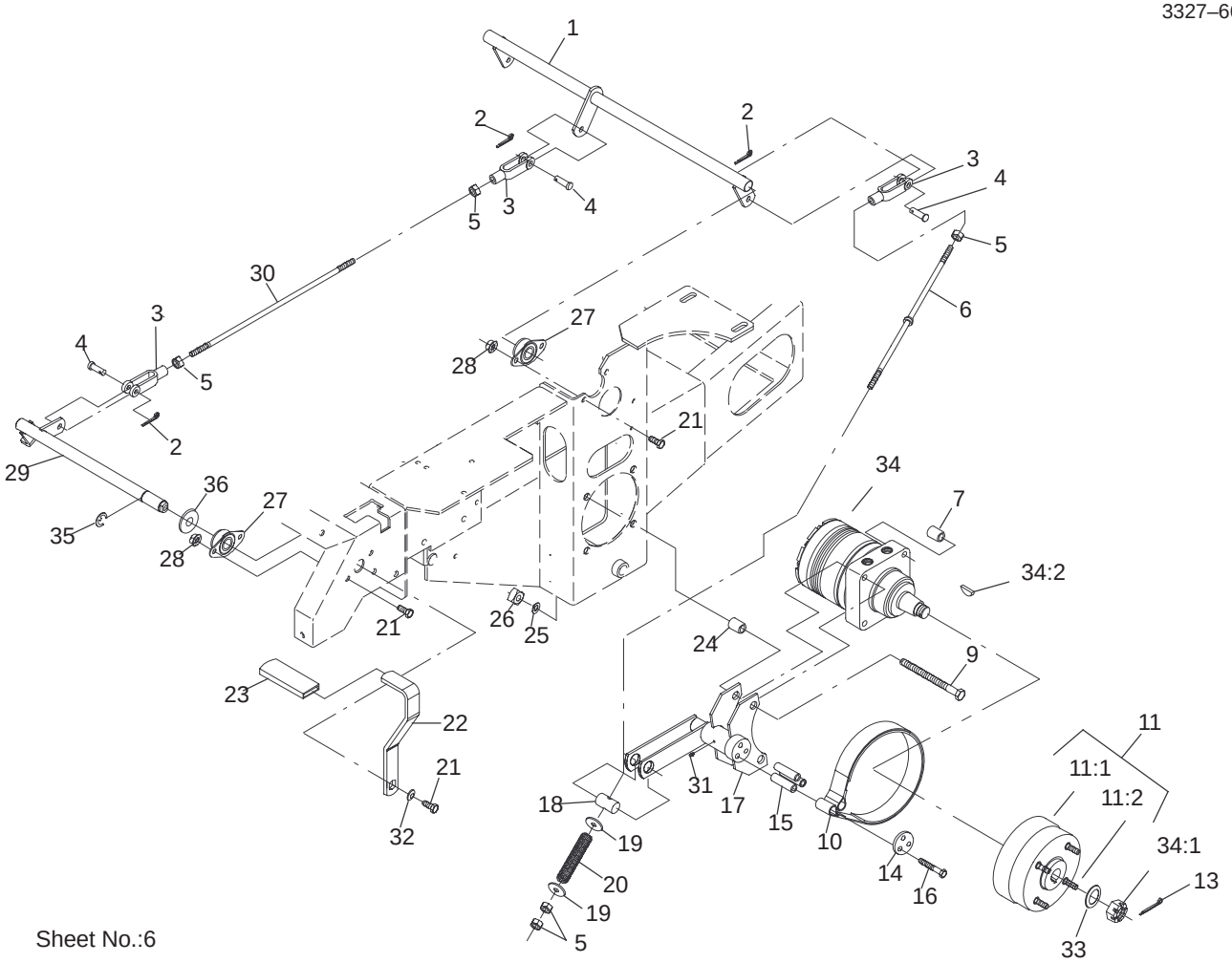

Sheet No.:6

Parking Brake System Assembly

Ref. No.	Part No.	Qty.	Description
1	1–652073–03	1	Crank–Brake, Park
2	3272–10	4	Pin–Cotter
3	1–633131	4	Yoke–Linkage, Brake
4	1–808285	4	Pin–Clevis
5	3219–3	8	Nut–HH
6	103–0356	2	Rod–Brake
7	1–653068	4	Spacer–Wheel
9	325–13	8	Screw–HH
10	103–0355	2	Band–Brake
11	103–0590	2	Hub–Wheel W/Studs
11:1	103–0589	1	Hub–Wheel
11:2	1–633926	4	Stud–Wheel
13	1–806800	2	Pin–Cotter
14	103–0374	2	Retainer–Band, Brake
15	103–0384	6	Spacer
16	322–9	6	Screw–HH
17	103–0352–03	2	Bracket–Brake
18	1–633144	2	Pin–Trunion
19	3256–4	4	Washer–Flat
20	1–633454	2	Spring–Brake
21	323–4	9	Screw–HH
22	1–653074–03	1	Handle–Brake, Park
23	1–633268	1	Grip–Lever, Brake
24	1–653069	4	Spacer–Wheel
25	3253–7	8	Washer–Lock
26	103–0131	8	Nut–Square

Ref. No.	Part No.	Qty.	Description
27	1–633102	4	Bearing–Flange, Side
28	3290–357	8	Nut–HHF
29	1–652085	1	Shaft–Brake, Parking
30	1–653061	1	Linkage–Handle, Brake
31	1481	2	Fitting–Grease
32	98–5975	1	Washer–Belleville
33	1–523157	2	Washer–Spacer
34	1–523328	2	Motor–Wheel
34:1	1–809036	1	Nut–HH
34:2	3257–42	1	Key–Woodruff
*34:99	1–000099	1	Kit–Seal
*34:99	1–000139	1	Kit–Bearing
35	32151–48	1	E–Ring
36	3256–28	1	Washer–Flat

* Not illustrated

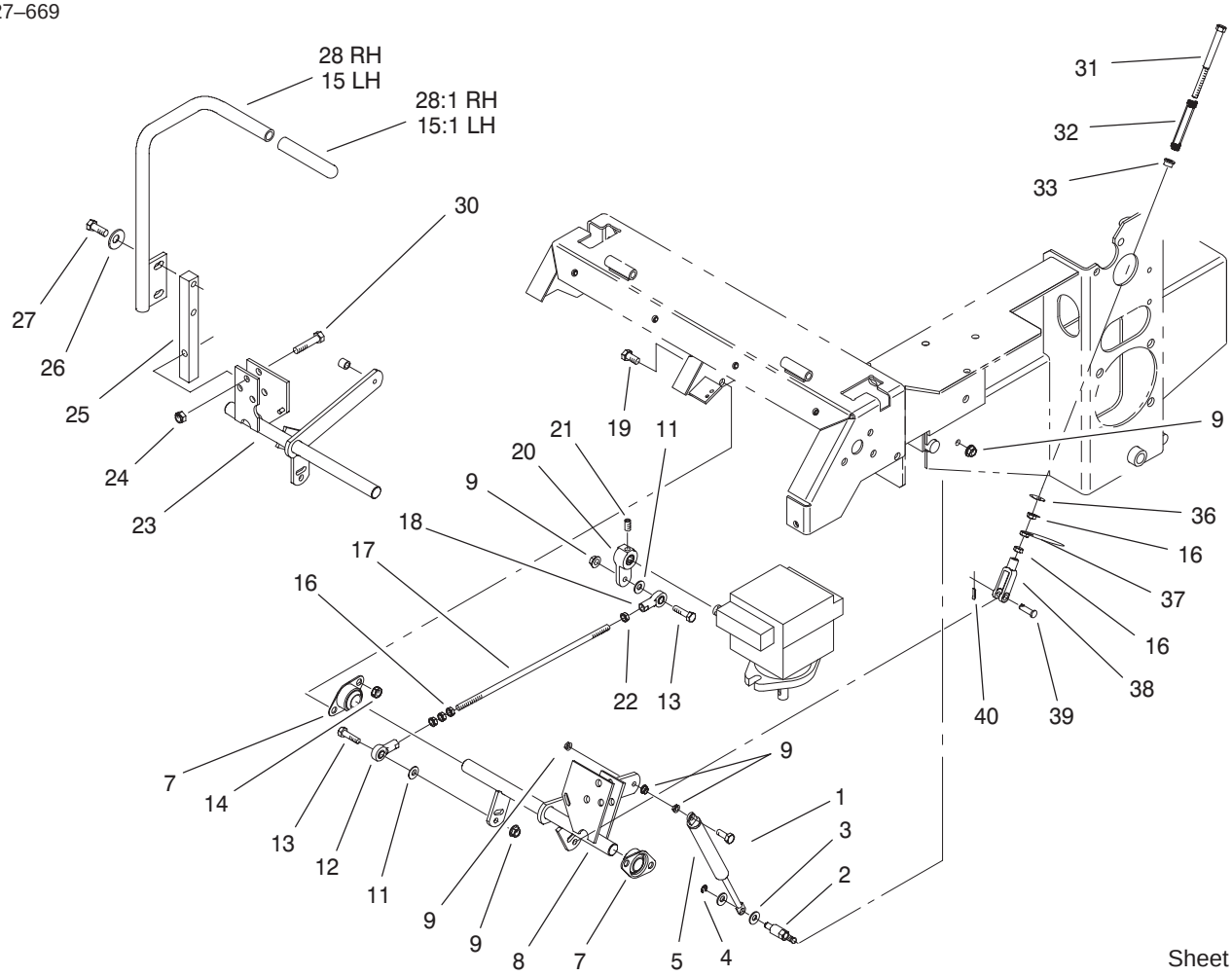

Sheet No.:7

Motion Control System Assembly

Ref. No.	Part No.	Qty.	Description
1	1–403180	2	Screw–HH
2	1–653316	2	Pin–Damper
3	3256–23	4	Washer–Flat
4	32120–35	2	E–Ring
5	1–523027	2	Damper–Control
7	1–633102	4	Bearing–Flange, Side
8	103–2199	1	LH Motion Control ASM
9	32128–20	12	Nut–HF
11	3256–3	4	Washer–Flat
12	1–543017	2	Balljoint–RH
13	322–6	4	Screw–HH
14	3290–357	8	Nut–HHF
15	103–0631	1	LH Lever ASM
15:1	1–633257	1	Grip–Control, Motion
16	3219–2	10	Nut–Hex
17	1–653046	2	Linkage–Pump/Lever
18	1–633152	2	Balljoint–Thread, LH
19	323–4	8	Screw–HH
20	1–653092	2	Arm–Control, Pump
21	1–803022	2	Screw
22	1–804524	2	Nut
23	103–2200	1	RH Motion Control ASM
24	3296–39	6	Nut–Lock, NI
25	103–0407	2	Arm–Shaft, Control

Ref. No.	Part No.	Qty.	Description
26	98–5975	4	Washer–Belleville
27	323–6	4	Screw–HH
28	103–0632	1	RH Lever ASM
28:1	1–633257	1	Grip–Control, Motion
30	323–9	6	Screw–HH
31	1–603737	2	Bolt–Return, Neutral
32	1–603807	2	Spring–Return, Neutral
33	1–603735	2	Bushing–Flanged
36	3256–2	2	Washer–Flat
37	3220–2	2	Nut
38	1–303105	2	Yoke–Adjustable
39	1–808280	2	Pin–Clevis
40	3272–5	2	Pin–Cotter

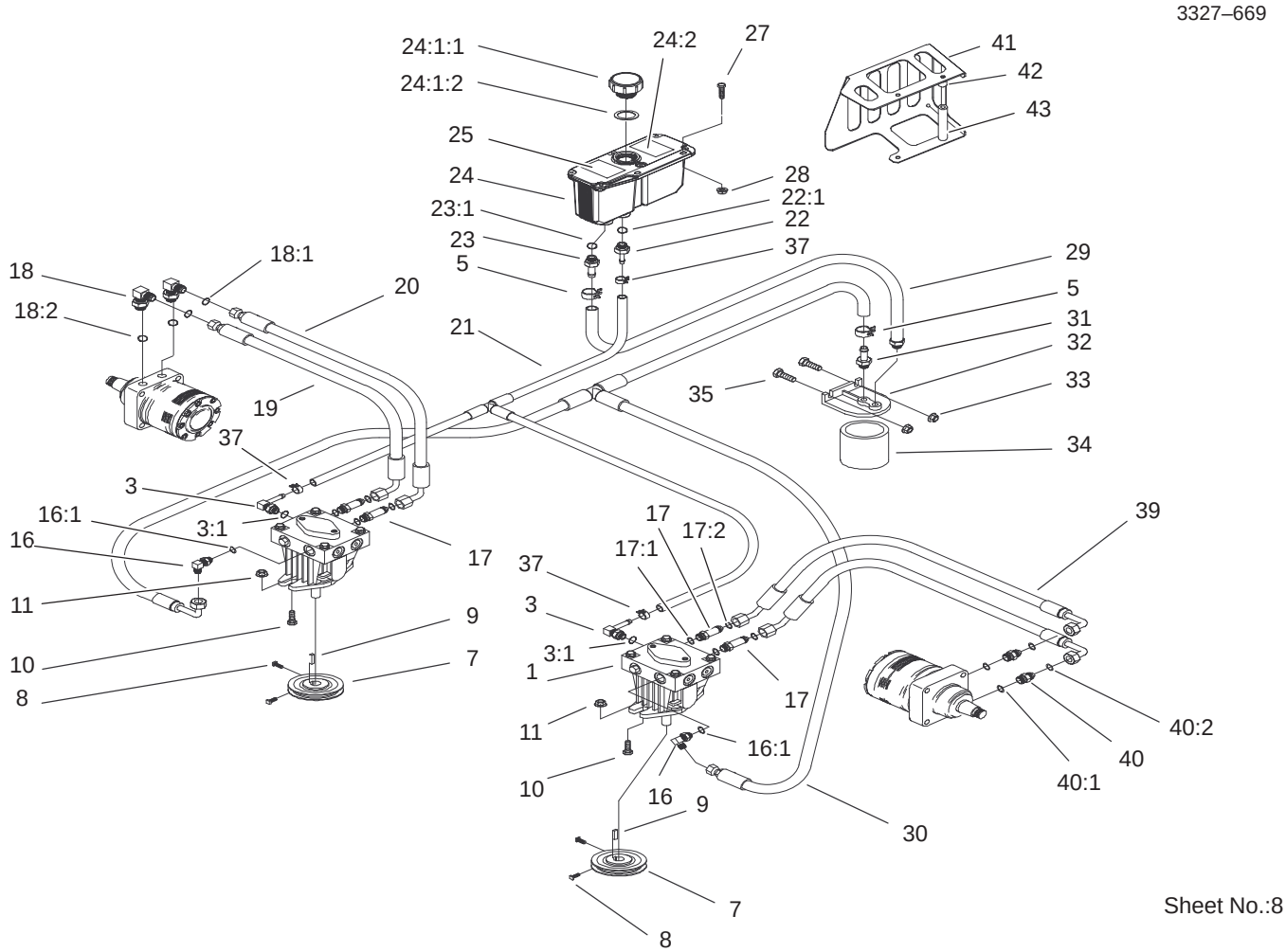

Hydraulic System Assembly

Ref. No.	Part No.	Qty.	Description
1	103–1942	2	Pump–Hydraulic
*1:1	105–6184	1	Kit – Overhaul, Seal
*1:2	105–6185	1	Plate – Valve
*1:8	103–2664	1	Kit–Shaft, Input 10a
*1:9	103–2665	1	Kit–Bearing, Thrust 10a
*1:10	103–2666	1	Kit–Block, Cylinder 10a
3	103–1799	2	Elbow–90°
3:1	237–42	1	O–Ring
5	103–1988	2	Clamp–Hose
7	1–653156	2	Sheave
8	1–803050	4	Screw–Set
9	1–807272	2	Key–Machine
10	323–7	4	Screw–HH
11	3290–357	4	Nut–HHF
16	103–1802	2	Elbow–90°
16:1	237–42	1	O–Ring
17	103–1940	4	Adapter–Straight
17:1	237–79	1	O–Ring
17:2	1–603992	1	O–Ring
18	1–633605	2	Fitting–Connector
18:1	1–603992	1	O–Ring
18:2	237–80	1	O–Ring
19	100–3964	1	Hose–Front
20	100–3965	1	Hose–Rear

Ref. No.	Part No.	Qty.	Description
21	103–1800	1	HYD Hose ASM
22	103–1801	1	Adapter–Straight
22:1	237–42	1	O–Ring
23	103–1912	1	Adapter–Straight
23:1	237–42	1	O–Ring
24	105–6127	1	Hydraulic Tank ASM
☆24:1		1	HYD Reservoir ASM
24:1:1	103–1948	1	Cap–HYD Reservoir
24:1:2	103–1949	1	Gasket–Cap
24:2	100–3952	1	Decal–Hot Surface, HYD Tank
25	103–2644	1	Decal–System, Exhaust
27	321–21	2	Screw–HH
28	32128–33	2	Nut–HF
29	103–1805	1	HYD Hose ASM
30	103–1803	1	HYD Hose ASM
31	103–1804	1	Adapter–Straight
32	1–603720	1	Head–Filter
33	32128–20	2	Nut–HF
34	1–633750	1	Filter–HYD
34	1–633752	1	Filter–HYD, Winter
35	322–5	2	Screw–HH
37	103–1716	3	Clamp–Hose
39	105–6187	2	Hose ASM W/ Sleeve
40	1–603991	2	Fitting–Straight

* Not illustrated
☆ Not serviced separately

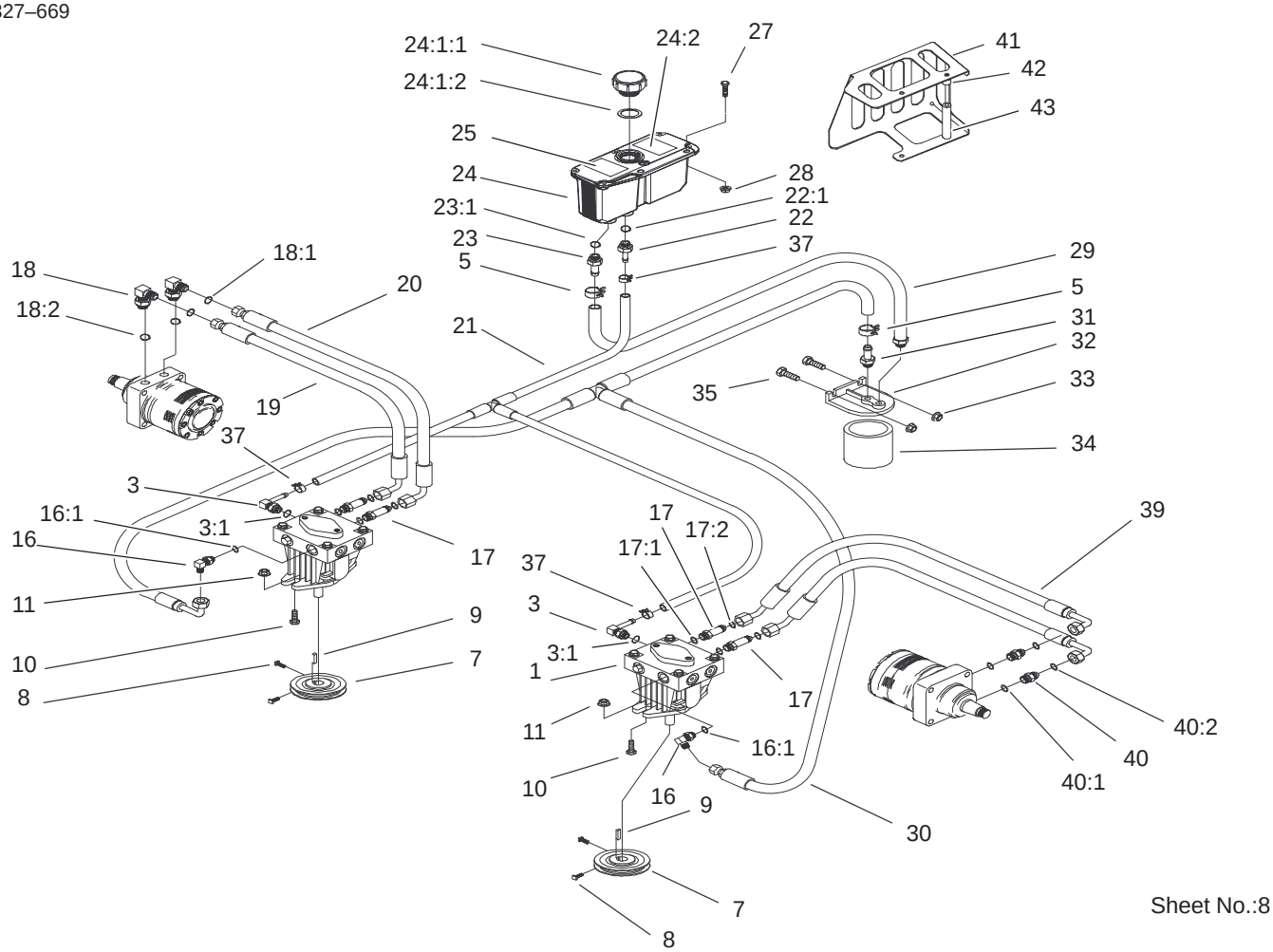

Hydraulic System Assembly (Continued)

Ref. No.	Part No.	Qty.	Description
40:1	237–80	1	O–Ring
40:2	1–603992	1	O–Ring
41	105–3617–03	1	Shield – Heat, HYD Reservoir
42	105–3619	2	Spacer
43	105–3618	2	Spacer

Ref. No.	Part No.	Qty.	Description

3327–669

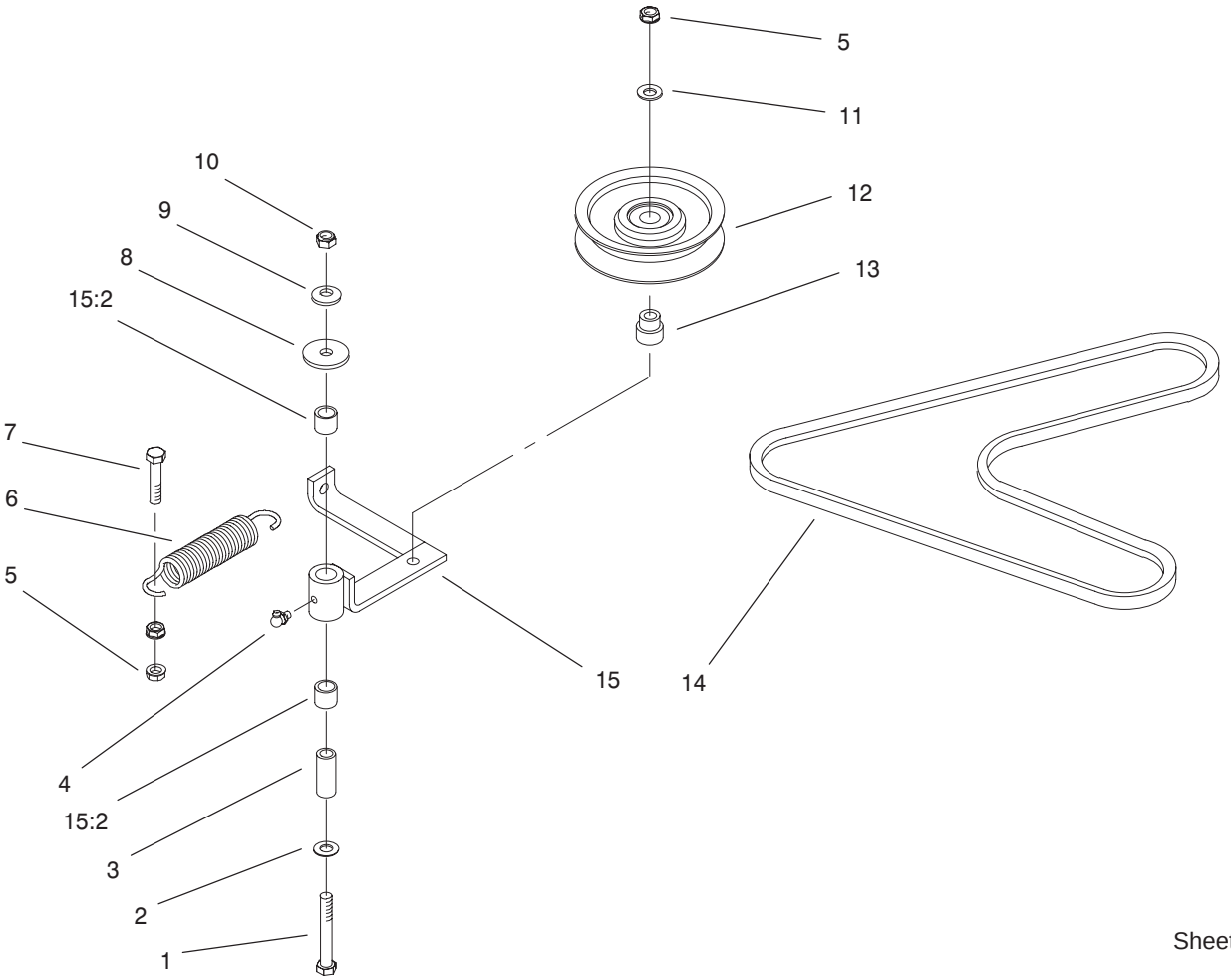

Sheet No.:9

Pump Idler and Belt Assembly

Ref. No.	Part No.	Qty.	Description
1	323–13	1	Screw–HH
2	3256–4	1	Washer–Flat
3	1–603044	1	Bushing
4	302–40	1	Fitting–Grease
5	3290–357	3	Nut–HHF
6	103–1767	1	Spring–Extension
7	323–9	2	Screw–HH
8	1–373034	1	Washer–Swivel
9	98–5975	1	Washer–Belleville
10	3296–39	1	Nut–Lock, NI
11	3256–24	1	Washer–Flat
12	1–603843	1	Pulley–Idler
13	1–603496	1	Bushing–Idler
14	1–653283	1	Belt–Pump
15	1–654143	1	Idler Arm
15:2	1–513034	2	Sleeve–Bearing

Ref. No.	Part No.	Qty.	Description

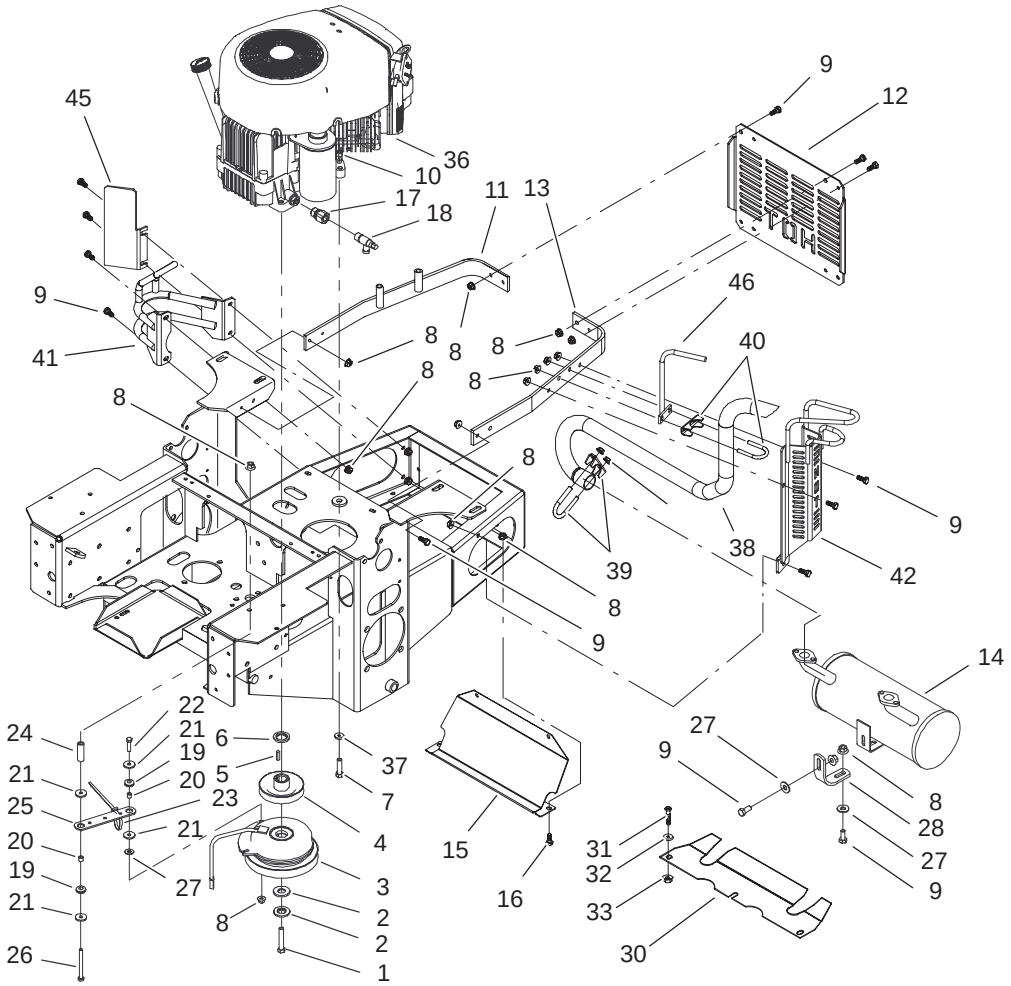

Sheet No.:10

Engine and Clutch Assembly

Ref. No.	Part No.	Qty.	Description
1	3212–12	1	Screw–HH
2	1–603610	2	Washer–Spring
3	1–653048	1	Clutch–Stop
4	1–653035	1	Sheave W/Hub
5	1–807259	1	Key
6	103–2308	1	Spacer–Crankshaft
7	322–9	4	Screw–HH
8	32128–20	27	Nut–HF
9	322–3	21	Screw–HH
10	3296–29	4	Nut–Lock, NI
11	1–652146–03	1	Strap–Guard, Engine
12	1–653095–03	1	Shield–Engine
13	103–2751–03	1	Strap–Guard, Engine, LH
14	103–1324	1	Muffler
15	103–2560–03	1	Shield–Heat
16	322–2	4	Screw–HH
17	103–1966	1	Adapter
18	103–1965	1	Valve–Drain, Oil
19	1–633630	2	Grommet–Brake
20	1–633545	2	Spacer–Grommet
21	1–613235	4	Washer
22	322–6	1	Screw–HH
23	1–303335	2	Tie–Plastic
24	1–523406	1	Bushing–Mount, Seat
25	1–633543–03	1	Strap–Clutch, Brake

Ref. No.	Part No.	Qty.	Description
26	322–22	1	Screw–HH
27	3256–3	3	Washer–Flat
28	1–653196	1	Bracket–Support, Muffler
30	1–653565–03	1	Shield,Heat
31	3230–1	3	Screw–CARR
32	3256–23	3	Washer–Flat
33	3296–29	3	Nut–Lock, NI
☆36		1	Engine–Kawasaki, Fh500v–Es10
37	1–303334	2	Washer–Spring
38	103–2599	1	Tailpipe
39	103–2630	1	Clamp–1.25”
40	103–2631	1	Clamp–1.125”
41	103–2564–03	1	RH Exhaust Guard ASM
42	105–9370–03	1	Exhaust Guard ASM, LH
45	105–9369–03	1	Exhaust Guard ASM, RH
46	105–9365–03	1	LH Rear Guard ASM

☆ Not serviced separately

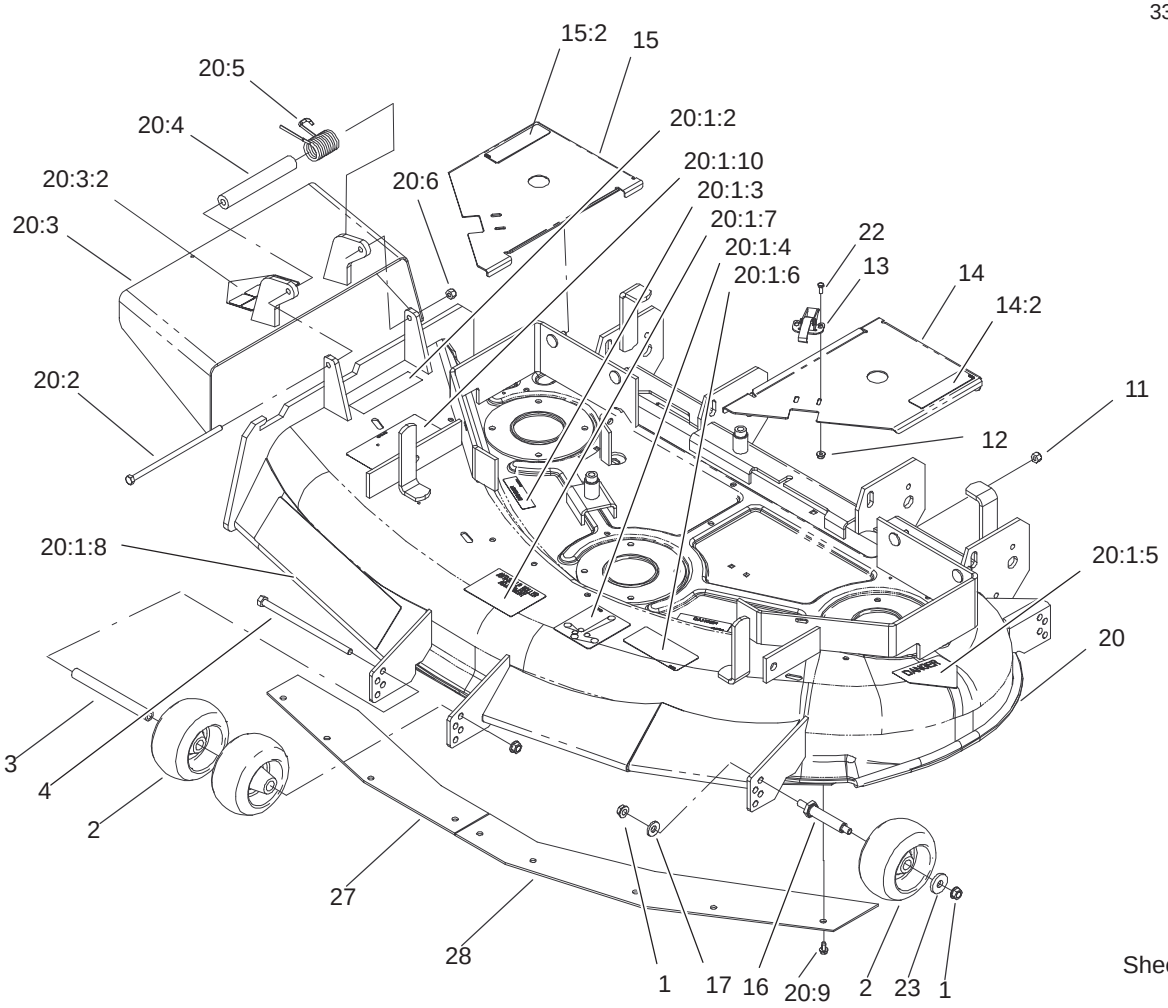

Sheet No.:12

Deck Assembly

Ref. No.	Part No.	Qty.	Description
1	3290–357	7	Nut–HHF
2	68–2730	5	Wheel–Gage
3	98–5967	1	Spacer–Wheel
4	323–28	1	Screw–HH
11	32152–1	4	Nut–Lock, NI
12	32128–17	4	Nut–Lock, Flange
13	249–21	2	Clamp–Slotted
14	100–3961	1	LH Cover ASM
14:2	98–1977	1	Decal–Warning
15	100–3962	1	RH Cover ASM
15:2	98–1977	1	Decal–Warning
16	99–2842	3	Spacer–Wheel
17	98–5975	3	Washer–Belleville
20	105–1699	1	Deck Service ASM
☆20:1		1	Deck ASM
20:1:2	93–7828	1	Decal–Danger, Int'l
20:1:3	98–1977	3	Decal–Warning
20:1:4	99–3943	1	Decal–Routing, Belt
20:1:5	93–7010	1	Decal–Danger
20:1:6	93–7818	1	Decal–Torque, Blade Bolt
20:1:7	99–8939	1	Decal–Anti Scalp
20:1:8	100–3967	1	Decal–Proline 112 Cm
20:1:10	93–7824	1	Decal–Danger, Int'l
20:2	322–50	1	Screw–Cap
20:3	105–4626	1	Deflector ASM

Ref. No.	Part No.	Qty.	Description
20:3:2	93–7316	1	Decal–Danger, Int'l
20:4	104–8555	1	Spacer–Mounting, Deflector
20:5	104–8554	1	Spring–Torsion
20:6	3296–29	1	Nut–Lock, NI
20:9	12–3270	7	Screw
22	3290–321	4	Screw–HWH
23	1–373034	3	Washer–Swivel
27	100–3257–03	1	Plate–Blowout, RH
28	100–3258–03	1	Plate–Blowout, LH

☆ Not serviced separately

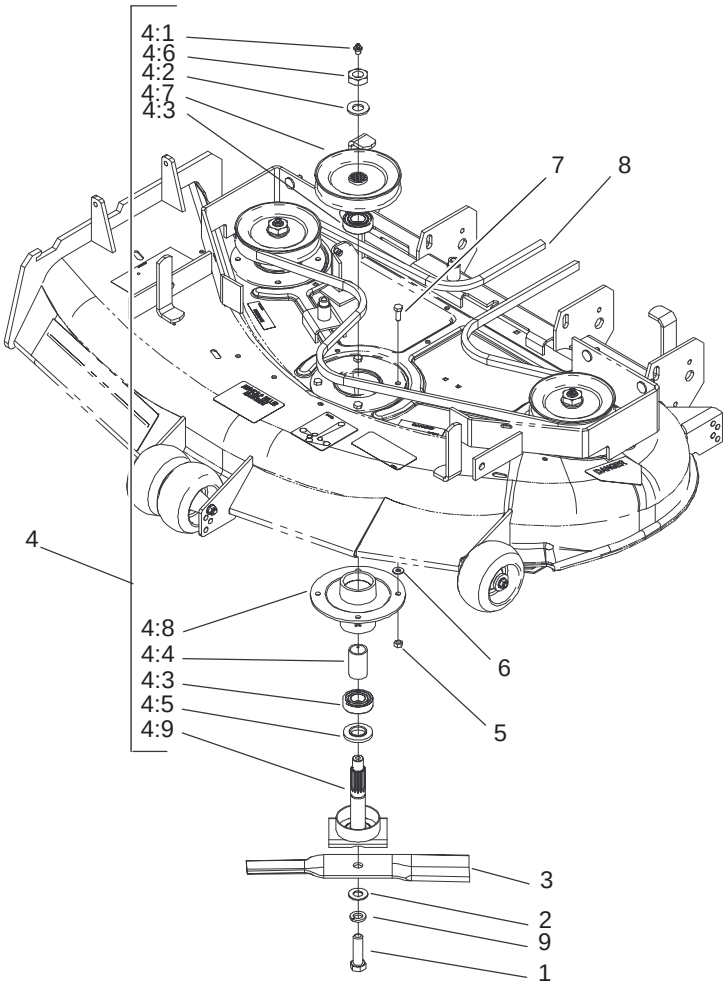

Sheet No.:13

Deck Spindle Assembly

Ref. No.	Part No.	Qty.	Description
1	51–4060	3	Screw–Blade
2	3256–27	3	Washer–Flat
3	54–0010	3	Blade
4	100–3963	3	Spindle Housing ASM
4:1	302–2	1	Fitting–Grease
4:2	7–4150	1	Washer–Pinion
4:3	251–257	2	Bearing
4:4	67–7580	1	Spacer–Bearing
4:5	67–7570	1	Spacer–Spindle
4:6	32146–20	1	Nut–Jam
4:7	99–8929	1	Pulley ASM
4:8	67–7590	1	Housing–Spindle
4:9	100–3974	1	Spindle Shaft ASM
5	32152–1	12	Nut–Lock, NI
6	3256–2	4	Washer–Flat
7	322–4	12	Screw–HH
8	99–3913	1	Belt
9	3253–8	3	Washer–Lock

Ref. No.	Part No.	Qty.	Description

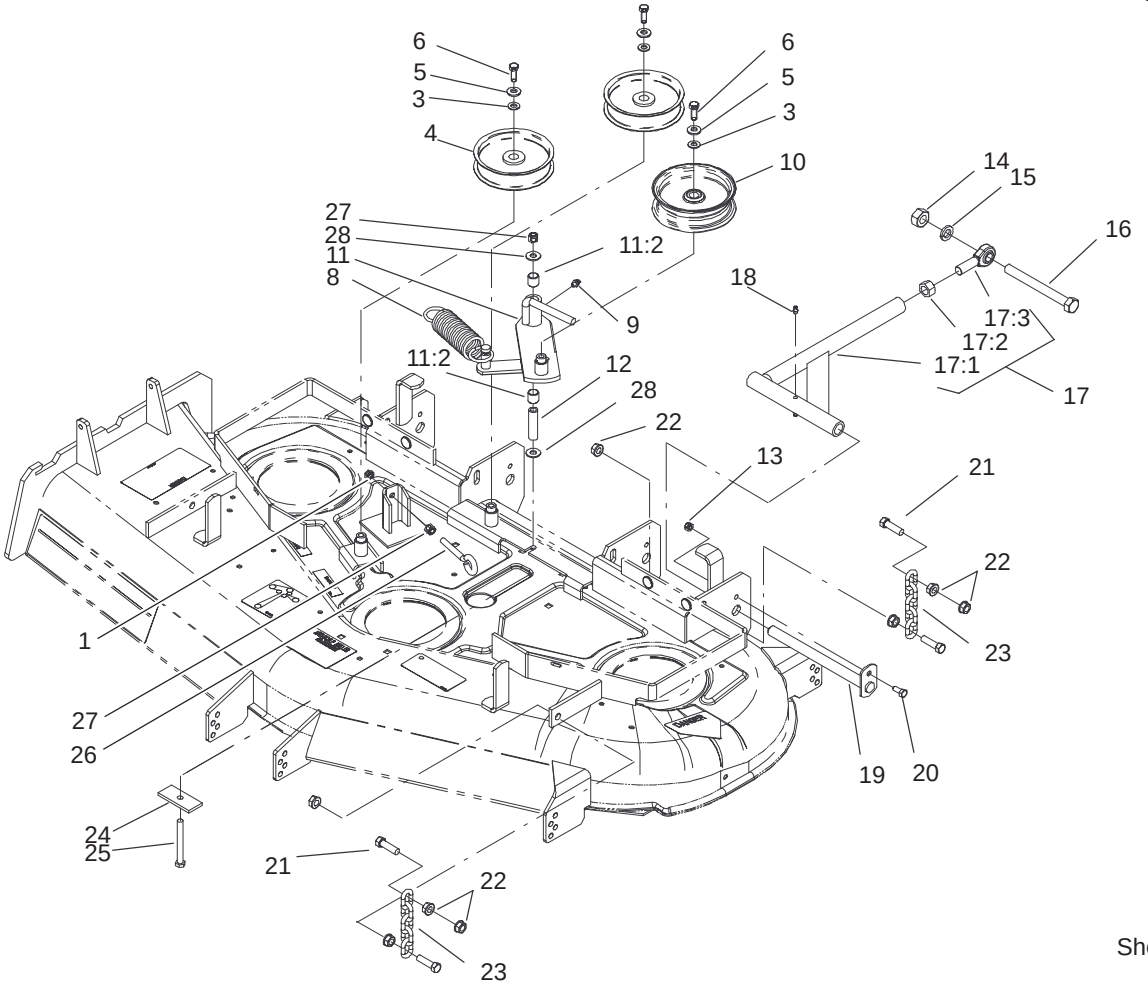

Sheet No.:16

Idler Pulley/Lift Strut, Chain Assembly

Ref. No.	Part No.	Qty.	Description
1	3217–7	1	Nut–Hex
3	3256–24	3	Washer–Flat
4	1–613098	2	Pulley–Idler
5	98–5975	3	Washer–Belleville
6	323–6	3	Screw–HH
8	1–633151	1	Spring–Extension
9	302–40	1	Fitting–Grease
10	99–8912	1	Pulley–Idler, Flat
11	99–8914	1	Idler Arm ASM
11:2	1–513034	2	Sleeve–Bearing
12	1–603384	1	Bushing–Pivot, Idler
13	3296–29	2	Nut–Lock, NI
14	3217–11	2	Nut–Hex
15	3253–8	2	Washer–Lock
16	1–800344	2	Screw
17	103–1081	2	Strut ASM
17:1	103–1072–01	1	Strut–Deck
17:2	3219–6	1	Nut–Hex
17:3	1–633029	1	Balljoint–Spherical
18	302–19	4	Fitting–Grease
19	1–632199–01	2	Pin–Strut, Deck
20	322–3	2	Screw–HH
21	1–800811	8	Screw–Cap, HH
22	32128–37	16	Nut–HF
23	1–633447	4	Chain–Lift, Deck
24	99–3946–01	1	Plate–Retainer, Bolt

Ref. No.	Part No.	Qty.	Description
25	1–800805	1	Screw–HH
26	94–2547	1	Bolt–Eye
27	3296–39	2	Nut–Lock, NI
28	1–809107	2	Washer–Hardened

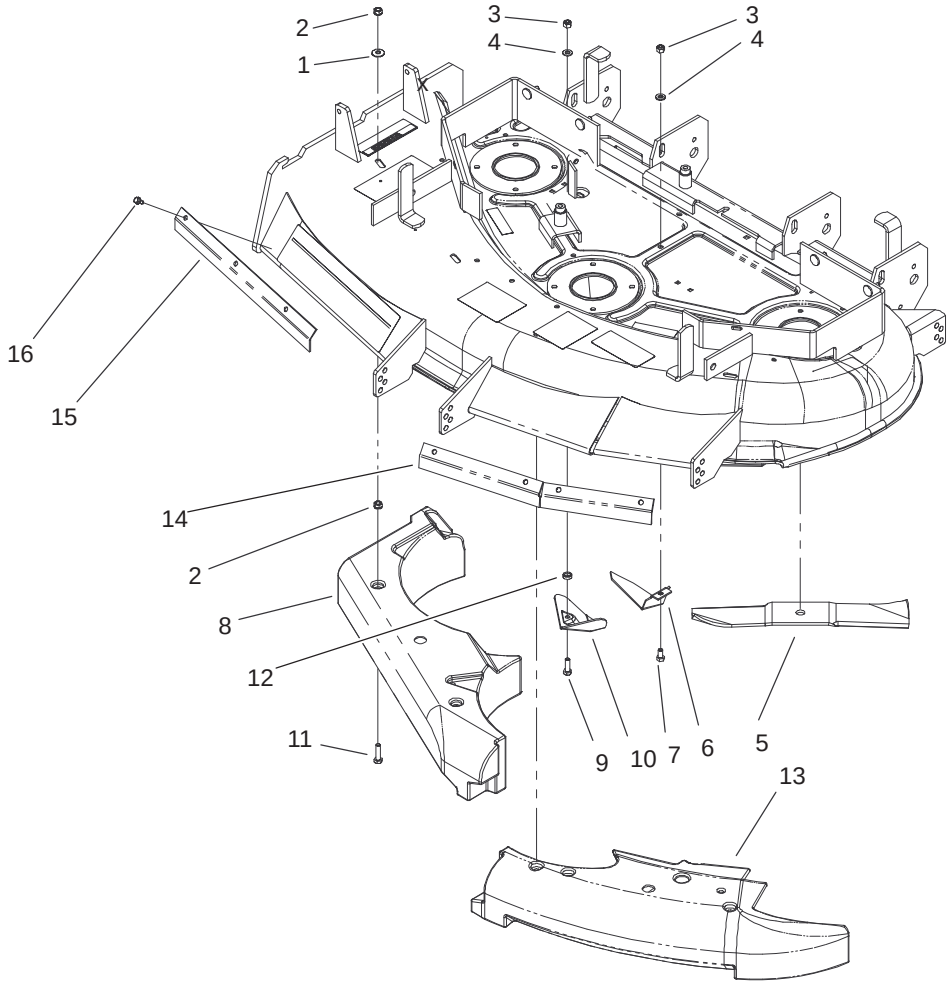

Sheet No.:18

Recycler Assembly

Ref. No.	Part No.	Qty.	Description
1	3290–456	4	Washer–Belleville
2	32149–1	8	Nut
3	3296–29	4	Nut–Lock, NI
4	3256–23	4	Washer–Flat
5	92–7952	3	Blade–Recycler
6	93–1196	1	Kicker–Center, Rear
7	322–2	1	Screw–HH
8	93–7651	1	Baffle–RH
9	322–5	3	Screw–HH
10	84–5760	3	Plate–Kicker
11	322–6	4	Screw–HH
12	59–4310	3	Spacer
13	93–7652	1	Baffle–LH
14	105–2675–01	1	Guard–Left, Intl
15	105–2672–01	1	Guard–Right, Intl
16	12–3270	7	Screw

Ref. No.	Part No.	Qty.	Description

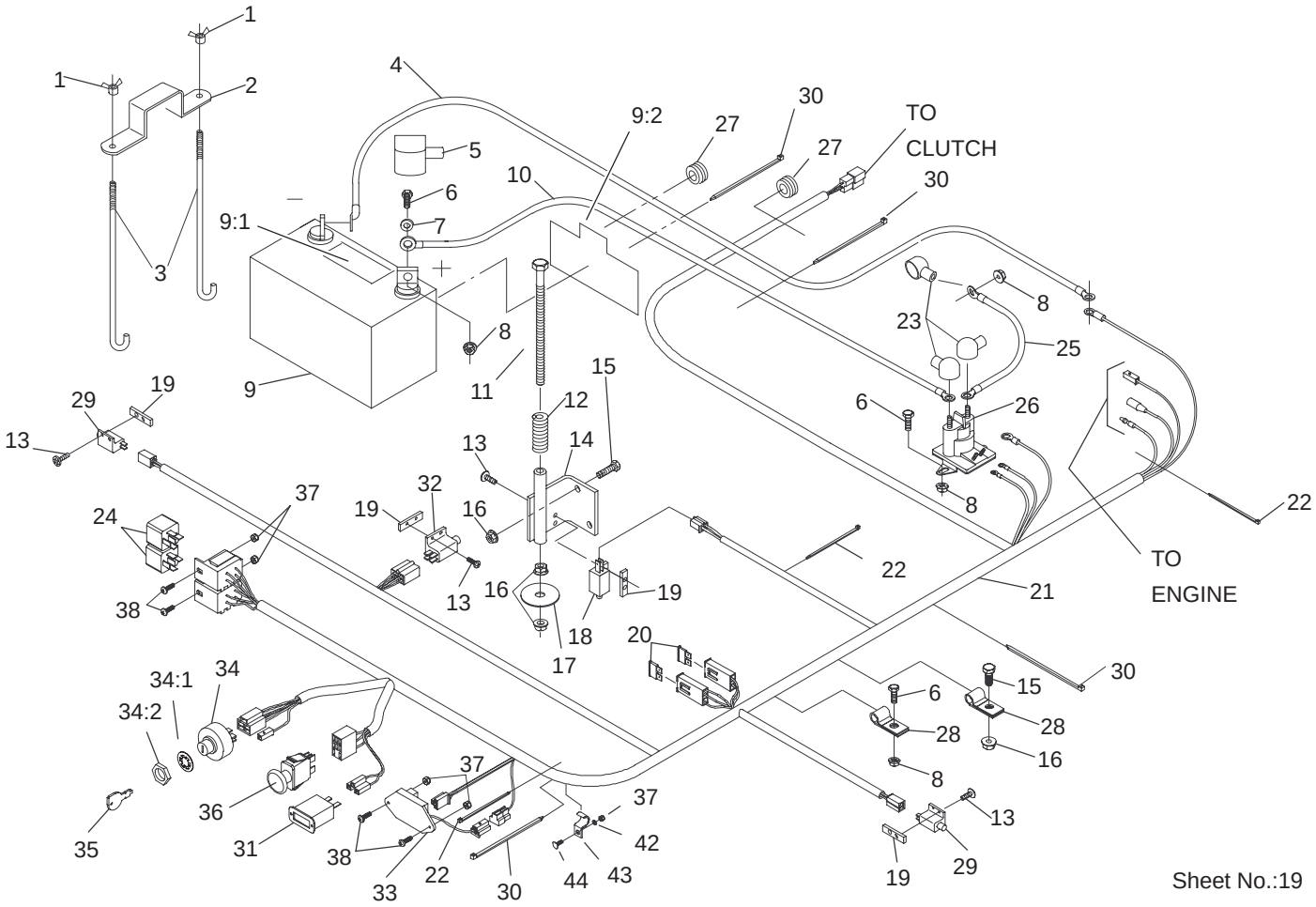

Electrical System Assembly

Ref. No.	Part No.	Qty.	Description
1	1–543792	2	Wingnut
2	1–633652–03	1	Strap–Holddown, Battery
3	1–633651	2	Bolt–Holddown
4	103–0705	1	Cable–Ground, Negative
5	1–543391	1	Insulator–Battery
6	321–4	5	Screw–HH
7	3256–2	2	Washer–Flat
8	32128–33	6	Nut–HF
9	105–1692	1	Battery – 230 Cca
9:1	104–4163	1	Decal–Battery
9:2	104–4164	1	Decal–Battery
10	103–0707	1	Cable–Battery, Pos.
11	1–800282	1	Screw–HH
12	1–523415	1	Spring–Switch, Seat
13	3290–500	8	Screw–PPH
14	1–652072–03	1	Bracket–Switch, Seat
15	322–3	3	Screw–HH
16	32128–20	5	Nut–HF
17	1–653036	1	Washer
18	1–513152	1	Switch–Closed, Normally
19	1–633181	4	Plate–Tapped
20	1–816001	2	Fuse–Type, Blade
21	103–0623	1	Harness–Wire

Ref. No.	Part No.	Qty.	Description
22	1–303287	3	Tie–Plastic
23	1–543393	3	Insulator–Solenoid
24	1–643275	2	Relay
25	1–633306	1	Wire–Starter
26	1–513075	1	Switch–Solenoid
27	1–543286	2	Grommet
28	1–633396	2	Clip–Loom
29	1–513051	2	Switch–Open, Normally
30	1–303335	4	Tie–Plastic
31	1–513374	1	Meter–Hour
32	1–633111	1	Switch
33	100–6186	1	Module–Delay, Seat
34	88–9830	1	Key Switch ASM
34:1	3254–5	1	Washer–Lock, Internal
34:2	218–461	1	Nut–HH
35	63–8360	2	Key–Ignition
36	1–633673	1	Switch–Delta
37	3296–2	5	Nut–Lock
38	1–807513	4	Bolt–CARR
42	3256–14	1	Washer–Flat
43	103–1193	1	Clip–Half, Loom
44	1–807533	1	Bolt–CARR

Electrical Schematic

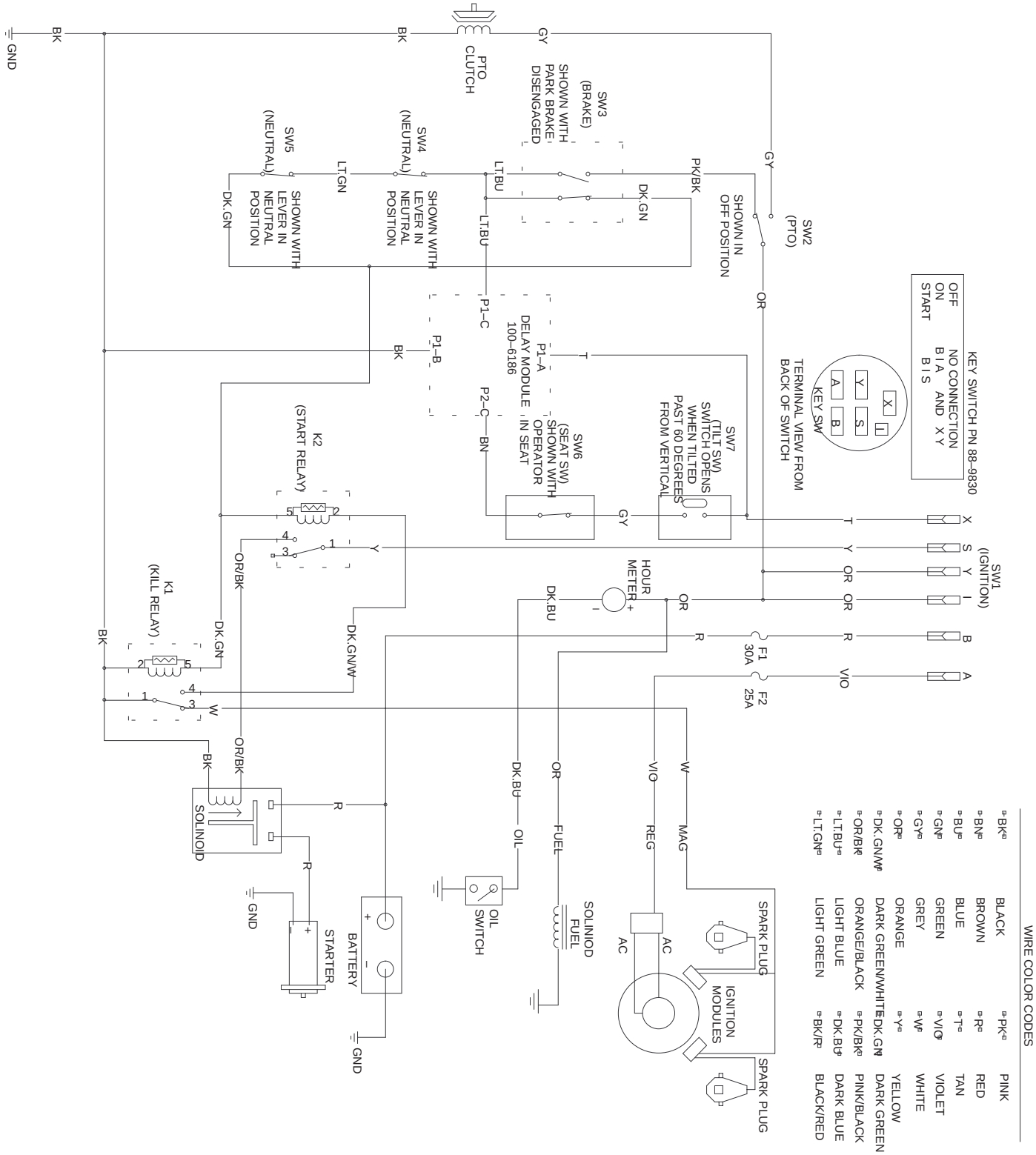

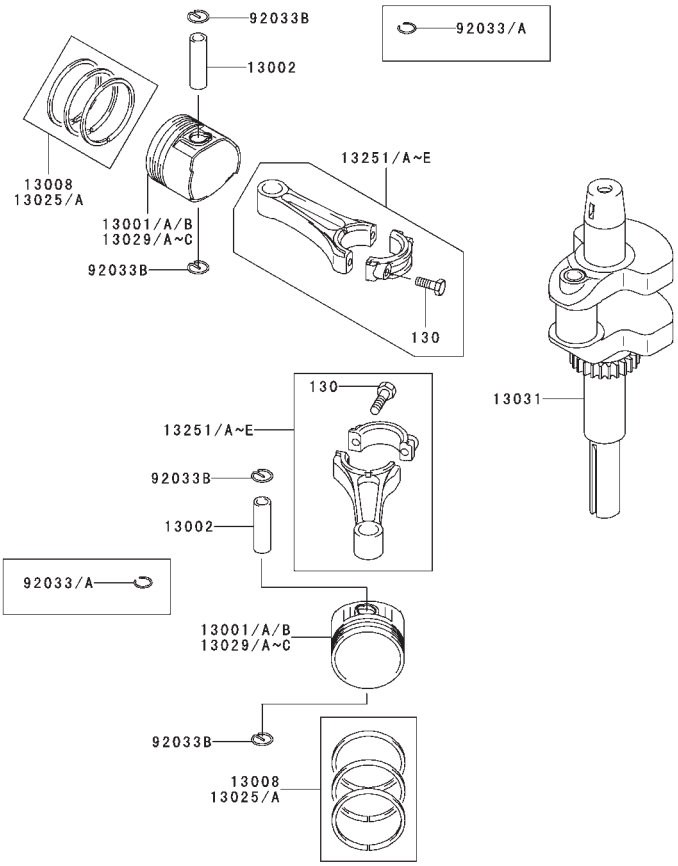

Piston/Crankshaft Assembly
Kawasaki FH500V–ES10

Ref. No.	Part No.	Qty.	Description
13001B	13001–7008	2	Piston–Engine
13002	13002–7001	2	Pin–Piston
13008	13008–6055	2	Ring–Set–Piston
13029C	13029–7004	AR	Piston
13031	13031–7001	1	Crankshaft–Comp
13251B	13251–7003	2	Rod–Assy–Connecting
13251D	13251–7004	2	Rod–Assy–Connecting
92033B	92033–7005	4	Ring–Snap
130	130G0630	4	Bolt–Flanged

Ref. No.	Part No.	Qty.	Description

Obtain Parts From Kawasaki

Cylinder/Crankcase Assembly
Kawasaki FH500V–ES10

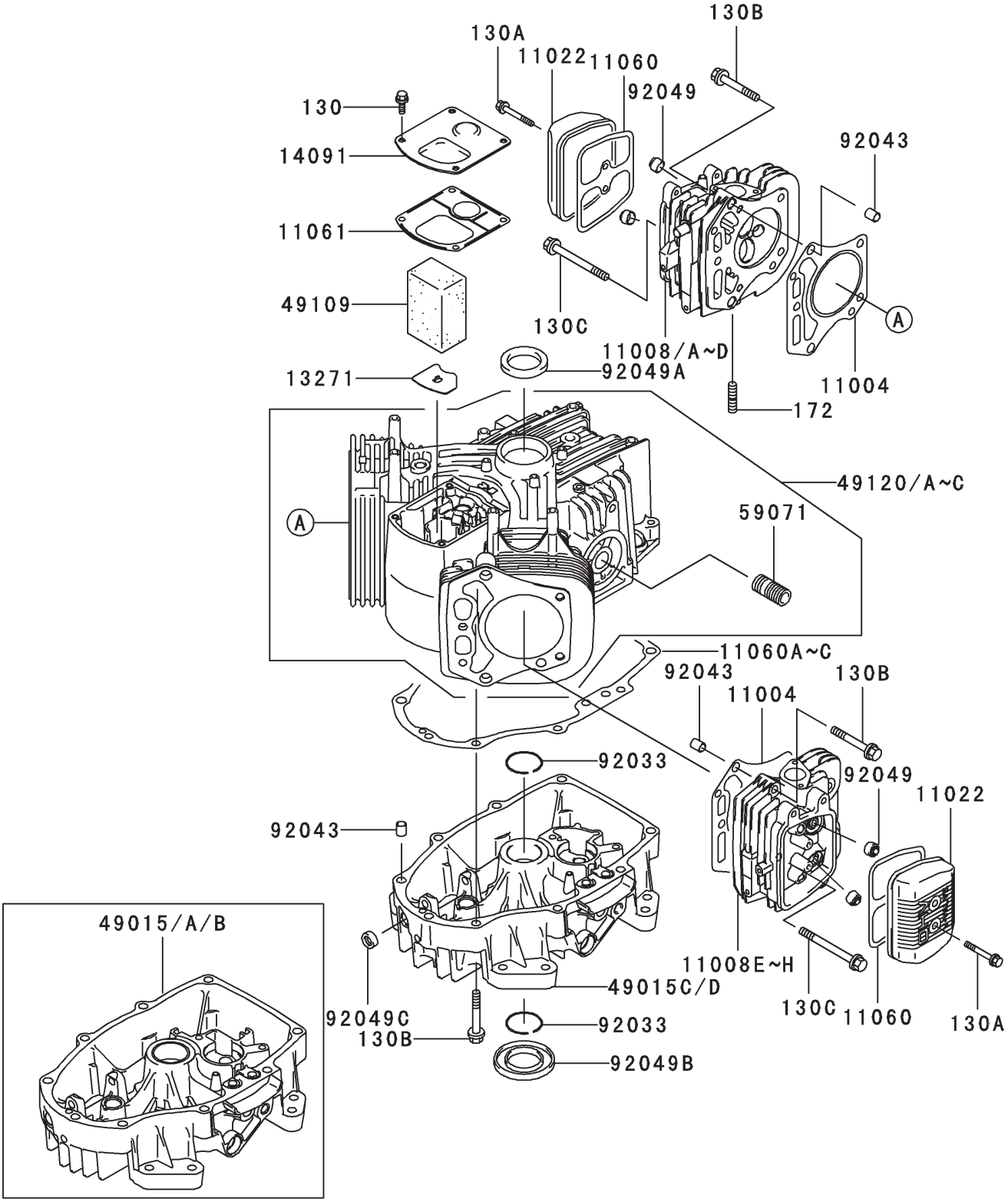

Cylinder/Crankcase Assembly
Kawasaki FH500V–ES10

Ref. No.	Part No.	Qty.	Description
11004	11004–7005	2	Gasket–Head
11008A	11008–6042	1	Head–Comp–Cylinder No. 2
11008G	11008–7009	1	Head–Comp–Cylinder No. 1
11022	11022–7003	2	Case–Rocker
11060	11060–7001	2	Gasket, Rocker Case
11060B	11060–7007	1	Gasket, Crankcase Cover
11061	11061–7001	1	Gasket–Breather
13271	13271–7016	1	Plate
14090	14090–7001	1	Cover, Breather
14091	14091–7006	1	Cover
49015C	49015–6226	1	Cover–Crankcase
49109	49109–7002	1	Element–Breather
49120B	49120–6132	1	Crankcase–Comp
59071	59071–2079	1	Joint
92033	92033–7003	2	Ring–Snap
92043	92043–7001	6	Pin
92049	92049–7001	4	Seal–Oil
92049A	92049–7002	1	Seal–Oil
92049B	92049–7004	1	Seal–Oil
92049C	92049–7005	1	Seal–Oil
130	130B0612	4	Bolt–Flanged
130A	130B0640	4	Bolt–Flanged
130B	130T0850	16	Bolt–Flanged
130C	130T0875	2	Bolt–Flanged
172	172G0818	4	Bolt–Stud

Ref. No.	Part No.	Qty.	Description

Obtain Parts From Kawasaki

Valve/Camshaft Assembly
Kawasaki FH500V–ES10

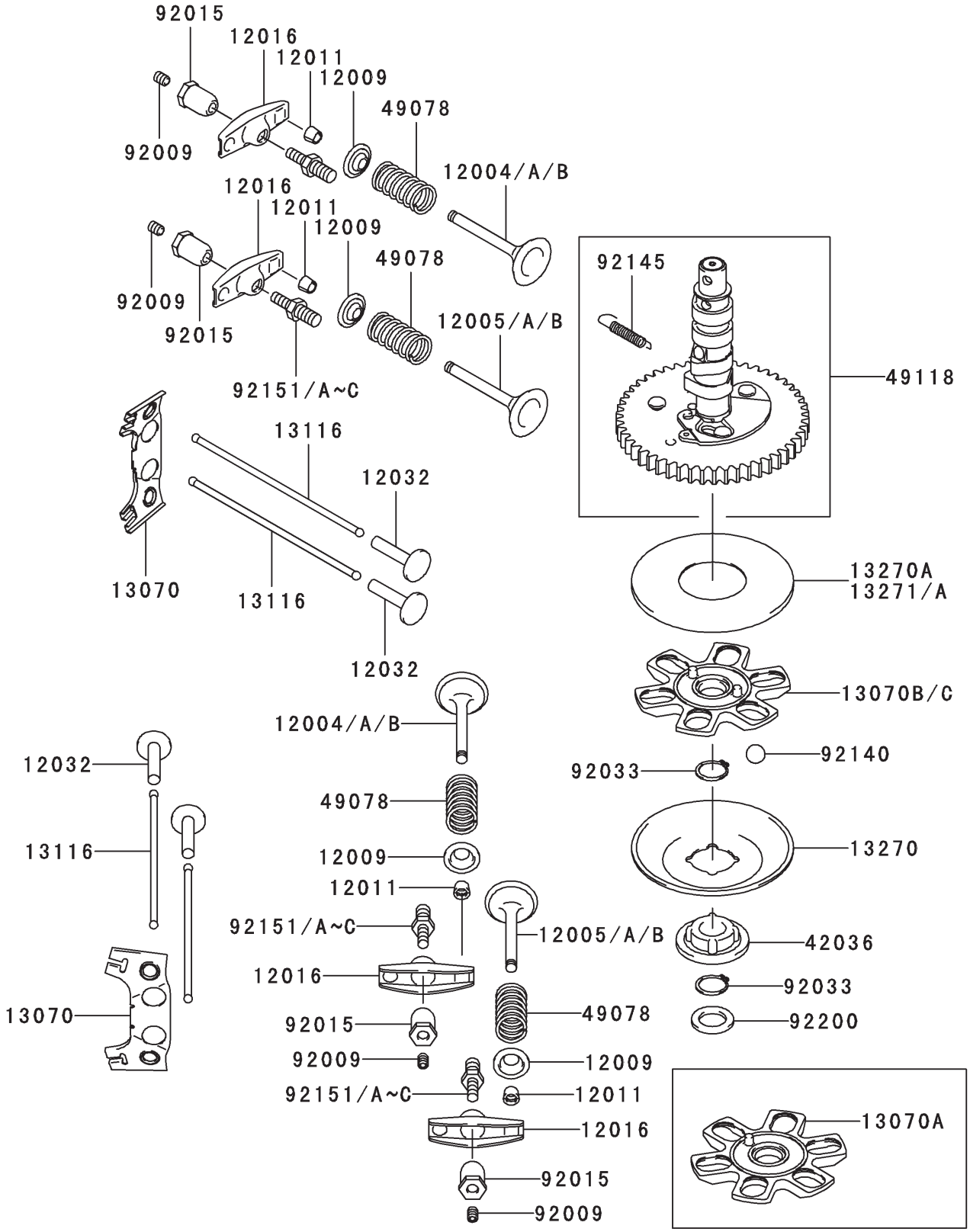

Valve/Camshaft Assembly
Kawasaki FH500V–ES10

Ref. No.	Part No.	Qty.	Description
12004A	12004–7003	2	Valve–Intake
12005A	12005–7003	2	Valve–Exhaust
12009	12009–7001	4	Retainer–Valve Spring
12011	12011–2056	8	Collet
12016	12016–7001	4	Arm–Rocker
12032	12032–7001	4	Tappet
13070	13070–7001	2	Guide
13070B	13070–7004	1	Guide
13116	13116–2057	4	Rod–Push
13270	13270–7002	1	Plate
13271	13271–7007	1	Plate
42036	42036–7001	1	Sleeve
49078	49078–7001	4	Spring–Engine Valve
49118	49118–7002	1	Camshaft–Comp
92009	92009–2341	4	Screw
92015	92015–2253	4	Nut
92033	92033–7001	2	Ring–Snap
92140	92140–7002	6	Ball
92145	92145–7001	1	Spring
92151B	92151–7019	4	Bolt
92200	92200–7001	1	Washer

Ref. No.	Part No.	Qty.	Description

Obtain Parts From Kawasaki

Carburetor Assembly
Kawasaki FH500V–ES10

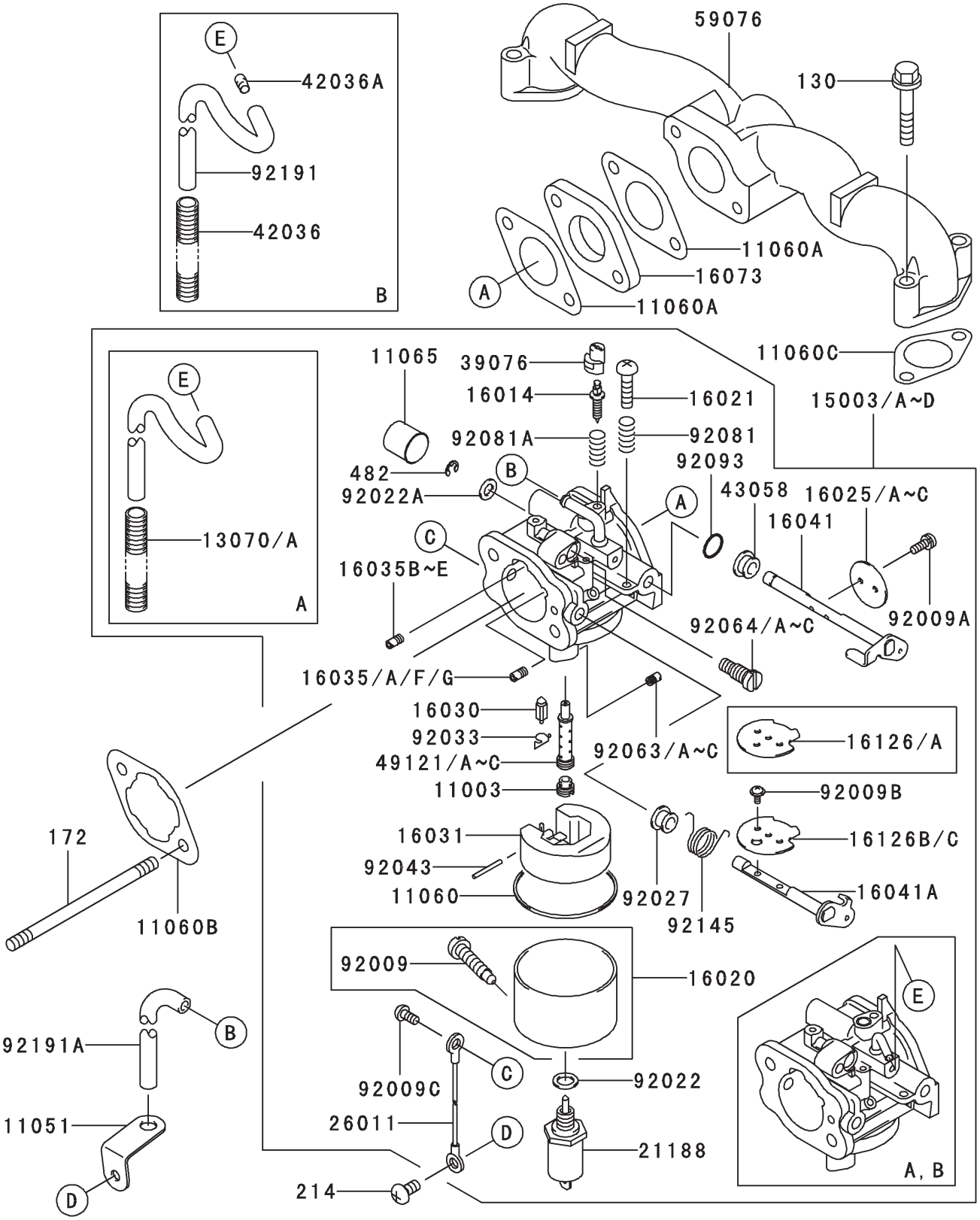

Carburetor Assembly
Kawasaki FH500V–ES10

Ref. No.	Part No.	Qty.	Description
11003	11003–2105	1	Seat–Valve
11060	11060–2406	1	Gasket
11060A	11060–7003	2	Gasket, Insurator
11060B	11060–7004	1	Gasket, Air Filter
11060C	11060–7005	2	Gasket
11065	11065–2061	1	Cap
15003C	15003–7037	1	Carburetor–Assy
16014	16014–2080	1	Screw–Pilot Air
16020	16020–2141	1	Chamber–Float
16021	16021–2060	1	Screw–Throttlestop
16025B	16025–2195	1	Valve–Throttle, #130
16030	16030–2067	1	Valve–Float
16031	16031–2066	1	Float
16035D	16035–2077	1	Jet–Air, #0.8
16035F	16035–2081	1	Jet–Air, #2.0
16041	16041–2253	1	Shaft–Carburetor, Choke
16041A	16041–7006	1	Shaft–Carburetor Throttle
16073	16073–7001	1	Insulator
16126B	16126–7008	1	Valve
21188	21188–2011	1	Solenoid
26011	26011–2281	1	Wire–Lead
39076	39076–2053	1	Limiter
43058	43058–3716	1	Ring
49121B	49121–2231	1	Nozzle–Main
59076	59076–7001	1	Manifold–Intake
92009	92009–2015	1	Screw
92009A	92009–2024	2	Screw
92009B	92009–2081	1	Screw
92009C	92009–2400	1	Screw
92022	92022–2231	1	Washer
92022A	92022–2239	1	Washer
92027	92027–2025	1	Collar
92033	92033–2067	1	Ring–Snap
92043	92043–2226	1	Pin
92063B	92063–2380	1	Jet–Main
92064B	92064–2127	1	Jet–Pilot
92081	92081–2009	2	Spring
92081A	92081–2256	2	Spring
92093	92093–2002	1	Seal
92145	92145–2061	1	Spring
92191A	92191–7016	1	Tube
130	130B0635	4	Bolt–Flanged
172	172G0685	2	Bolt–Stud
214	214B0510	1	Screw–Pan
482	482L4000	1	Circlip–Type–E

Ref. No.	Part No.	Qty.	Description

Obtain Parts From Kawasaki

Control Equipment Assembly
Kawasaki FH500V–ES10

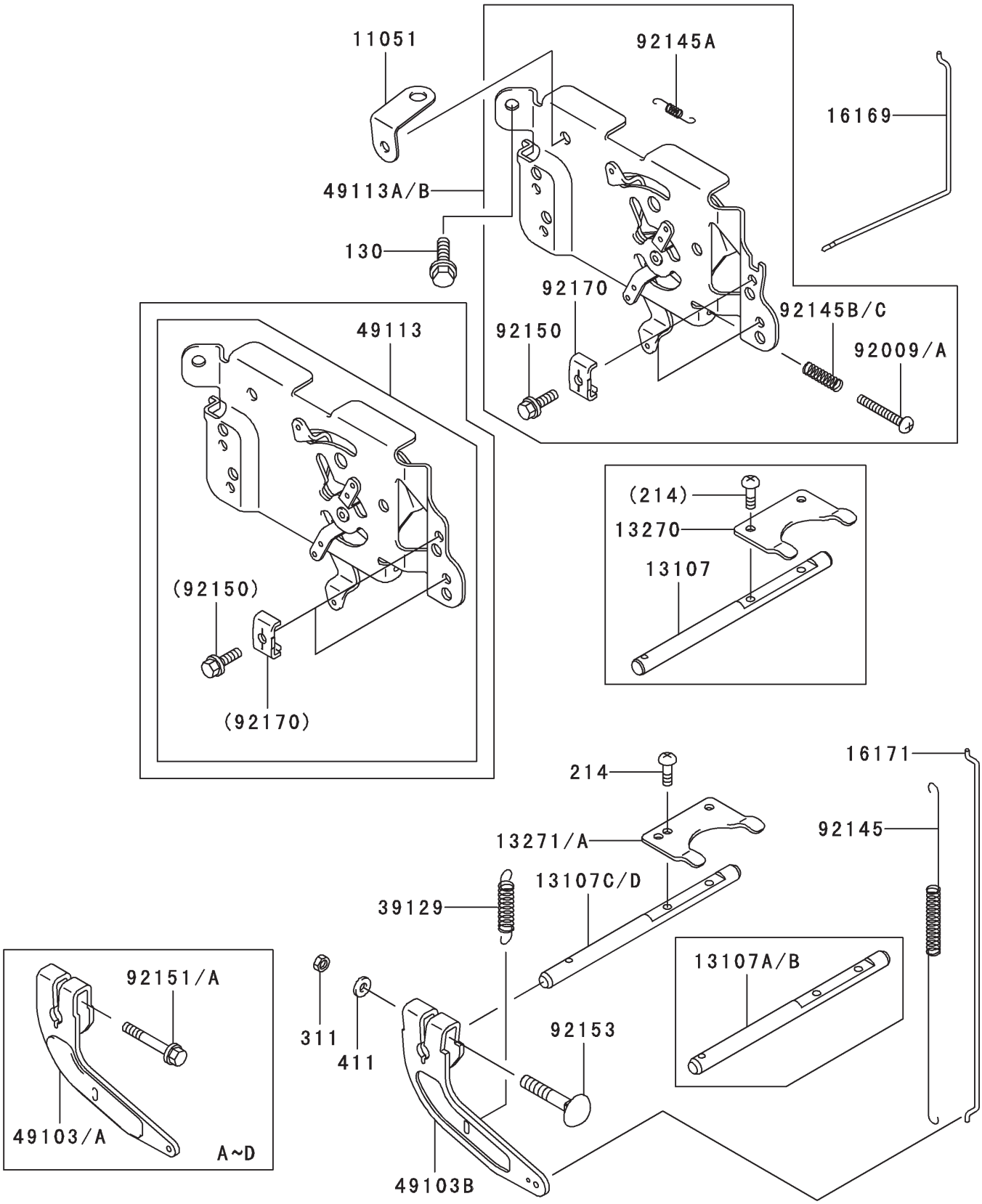

Control Equipment Assembly
Kawasaki FH500V–ES10

Ref. No.	Part No.	Qty.	Description
1105111	051–7008	1	Bracket
13107C	13107–7010	1	Shaft
13271	13271–7018	1	Plate
16169	16169–7001	1	Link–Choke
16171	16171–7001	1	Link
39129	39129–7003	1	Spring–Governor
39129A	39129–7003	1	Spring–Governor
49103B	49103–7004	1	Arm–Governor
49113B	49113–7004	1	Panel–Comp–Control
92009A	92009–7007	1	Screw
92145	92145–7003	1	Spring
92145A	92145–7004	1	Spring
92145B	92145–7005	1	Spring
92150	92150–2182	2	Bolt, 5x18
92153	92153–7005	1	Bolt, 6x35
92170	92170–7001	2	Clamp
130	130B0612	2	Bolt–Flanged
214	214B0408	2	Screw–Pan
311	311B0600	1	Nut–Hex
411	411B0600	1	Washer–Plain

Ref. No.	Part No.	Qty.	Description

Obtain Parts From Kawasaki

Cooling Equipment Assembly
Kawasaki FH500V–ES10

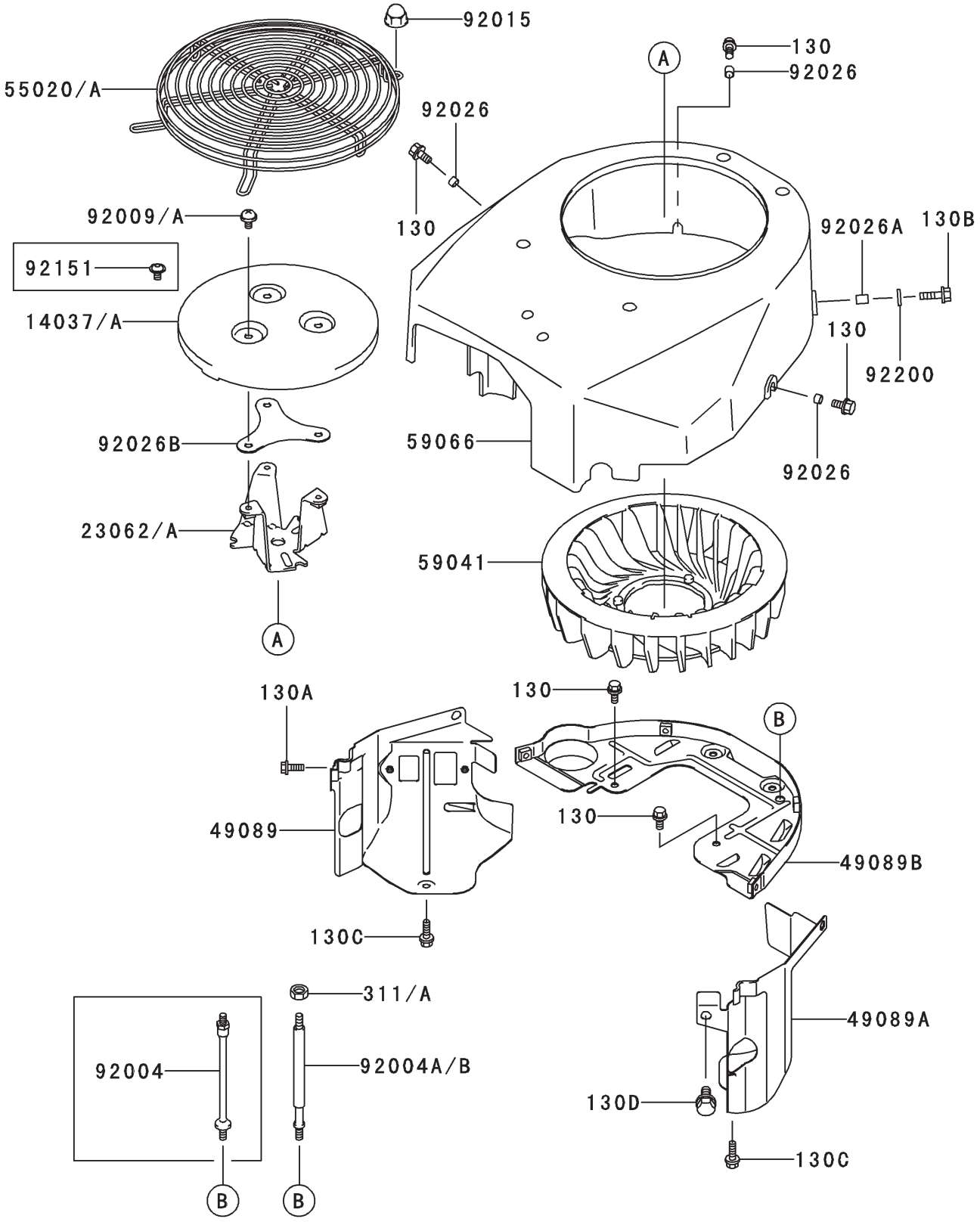

Cooling Equipment Assembly
Kawasaki FH500V–ES10

Ref. No.	Part No.	Qty.	Description
1327013	270–7007	1	Plate
14037	14037–7003–9H	1	Screen
23062	23062–7008	1	Bracket–Comp
49089	49089–7001	1	Shroud–Engine
49089A	49089–7002	1	Shroud–Engine
49089B	49089–7003	1	Shroud–Engine
55020	55020–7004	1	Guard
59041	59041–7001	1	Fan
59066	59066–7002	1	Housing–Fan
92004	92004–7006	2	Stud
92009	92009–7008	3	Screw, 6x10
92015	92015–1170	4	Nut
92026	92026–7001	3	Spacer, 6.2x7.9x5
92026A	92026–7003	1	Spacer, 6.5x7.9x10.5
92026B	92026–7007	1	Spacer
92200	92200–2078	1	Washer,
130	130B0612	5	Bolt–Flanged
130A	130B0616	2	Bolt–Flanged
130B	130B0620	1	Bolt–Flanged
130C	130B0625	2	Bolt–Flanged
130D	130B0816	1	Bolt–Flanged
311	311B0600	2	Nut–Hex

Ref. No.	Part No.	Qty.	Description

Obtain Parts From Kawasaki

Electric Equipment Assembly
Kawasaki FH500V–ES10

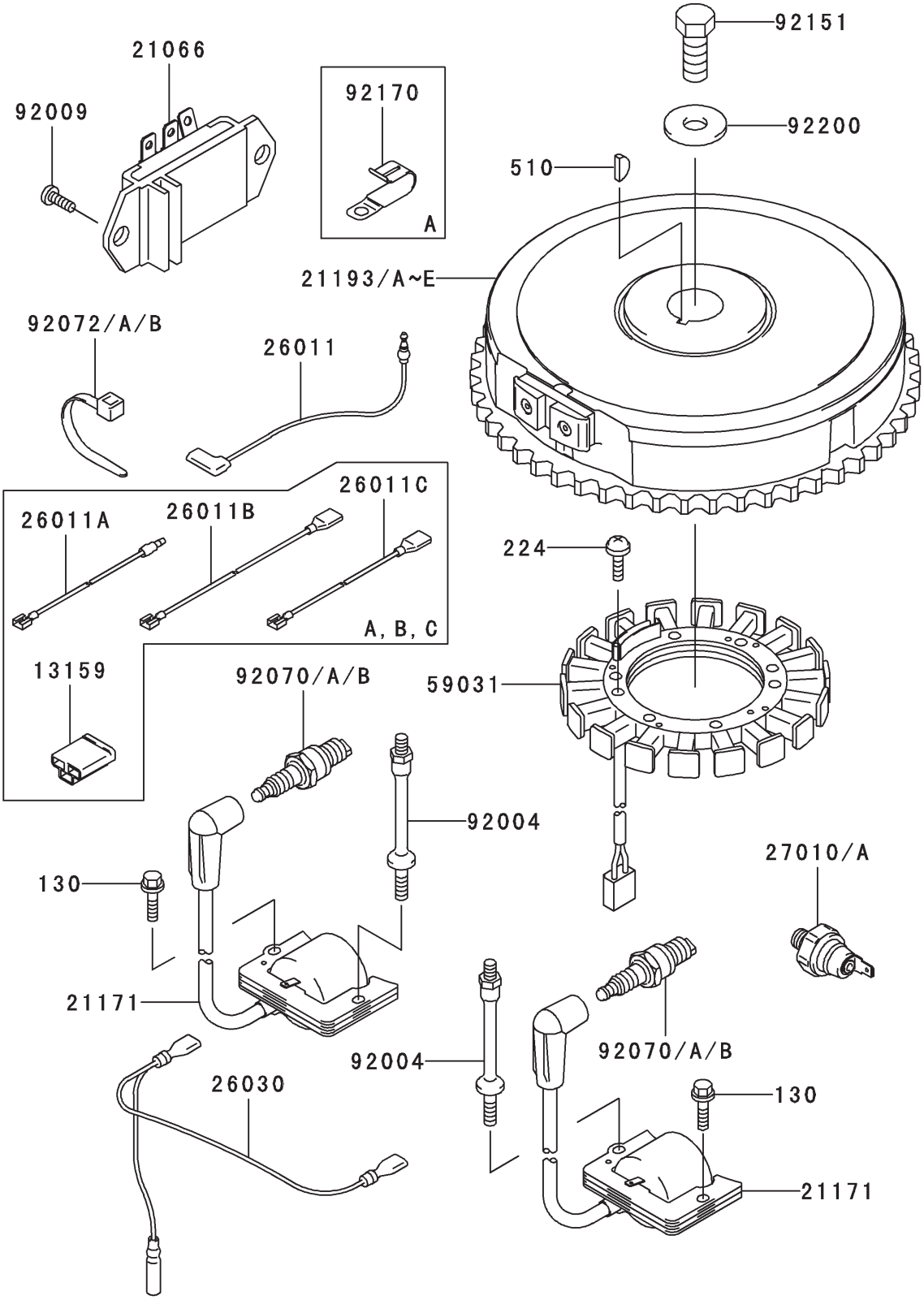

Electric Equipment Assembly
Kawasaki FH500V–ES10

Ref. No.	Part No.	Qty.	Description
21066	21066–7001	1	Regulator–Voltage
21171	21171–7001	2	Coil–Assy–Ignition
21193C	21193–7007	1	Flywheel–Assy
26011	26011–7001	1	Wire–Lead
26030	26030–7001	1	Harness
59031	59031–7001	1	Coil–Charging
92004	92004–2147	2	Stud
92009	92009–2308	2	Screw
92070A	92070–7003	2	Plug–Spark (RCJ8Y)
92072A	92072–7003	2	Band
92151	92151–2097	1	Bolt, 12x30
92200	92220–7002	1	Washer
130	130B0620	1	Bolt–Flanged
224	224B0520	4	Screw–Pan–WP–Cros
510	510A5100	1	Key–Woodruff

Ref. No.	Part No.	Qty.	Description

Obtain Parts From Kawasaki

Starter Assembly
Kawasaki FH500V–ES10

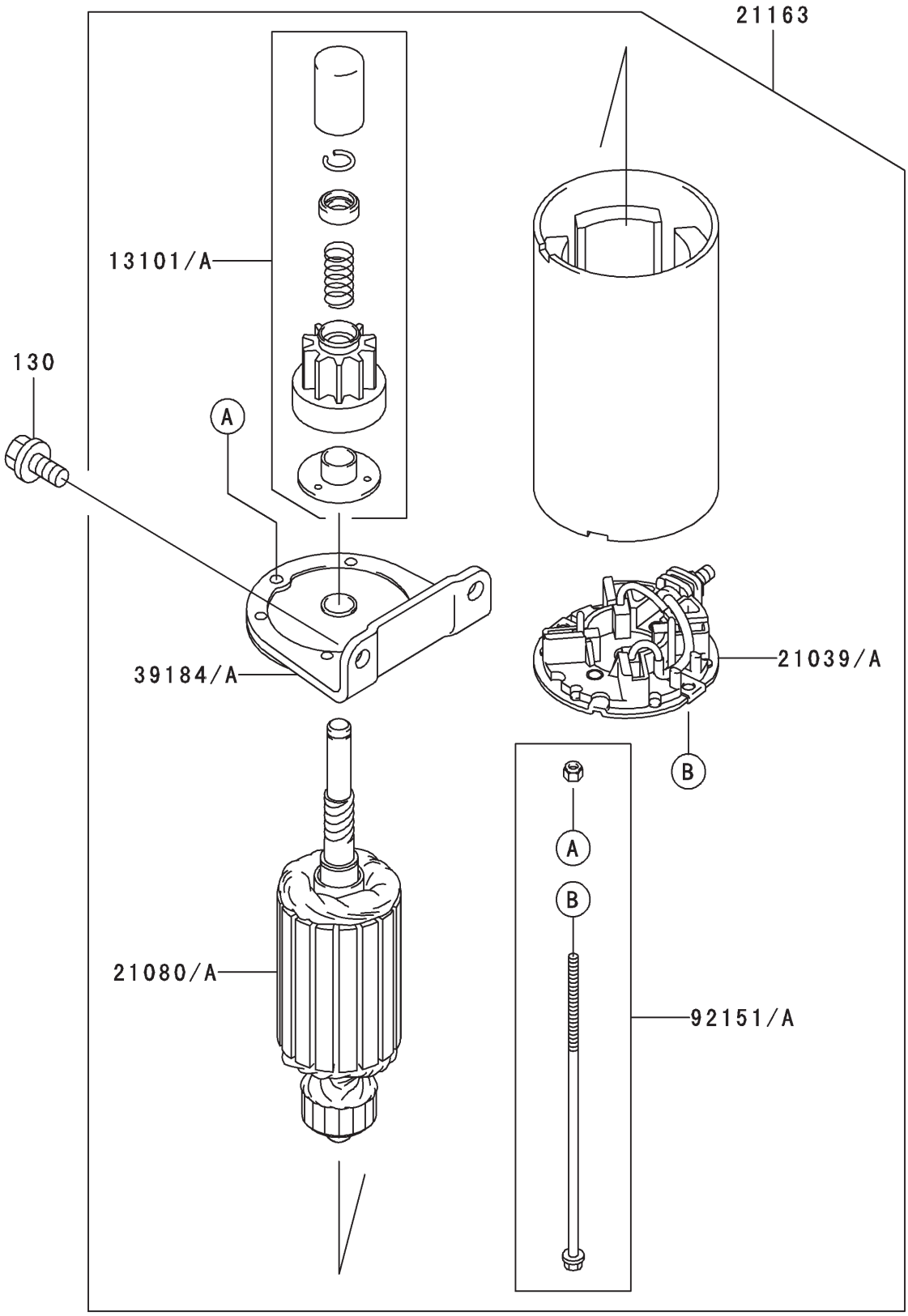

Starter Assembly
Kawasaki FH500V–ES10

Ref. No.	Part No.	Qty.	Description
13101	13101–7001	1	Gear ASM
21039	21039–7001	1	Brush
21080	21080–7001	1	Armature
21163	21163–7001	1	Starter–Electric
39184	39184–7001	1	Bracket ASM
92151	92151–7013	1	Bolt
130	130B0816	2	Bolt–Flanged

Ref. No.	Part No.	Qty.	Description

Obtain Parts From Kawasaki

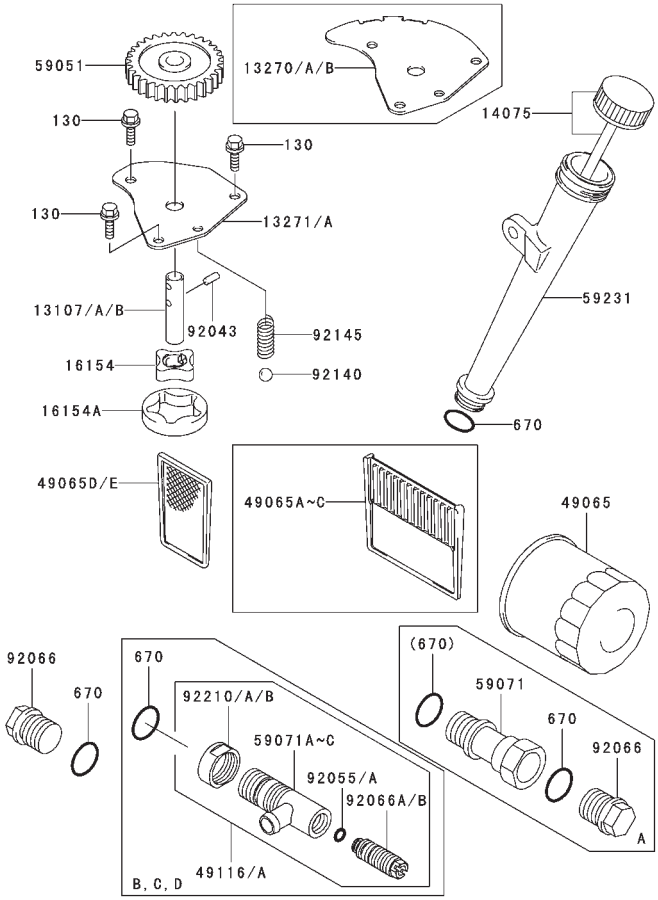

Lubrication Equipment Assembly
Kawasaki FH500V–ES10

Ref. No.	Part No.	Qty.	Description
13107A	13107–7009	1	Shaft, Oil Pump
13271	13271–7017	1	Plate
14075	14075–7001	1	Cap–Assy
16154	16154–2053	1	Rotor–Pump, Out
16154A	16154–2054	1	Rotor–Pump, Out
49065	49065–2078	1	Filter–Oil
49065D	49065–7001	1	Filter–Oil
59051	59051–7004	1	Gear–Spur
59231	59231–7001	1	Filler
92043	92043–7003	1	Pin
92066	92066–7003	2	Plug
92140	92140–7003	1	Ball
92145	92145–7002	1	Spring
130	130B0612	3	Bolt–Flanged
670	670D2016	1	O–Ring

Ref. No.	Part No.	Qty.	Description

Obtain Parts From Kawasaki

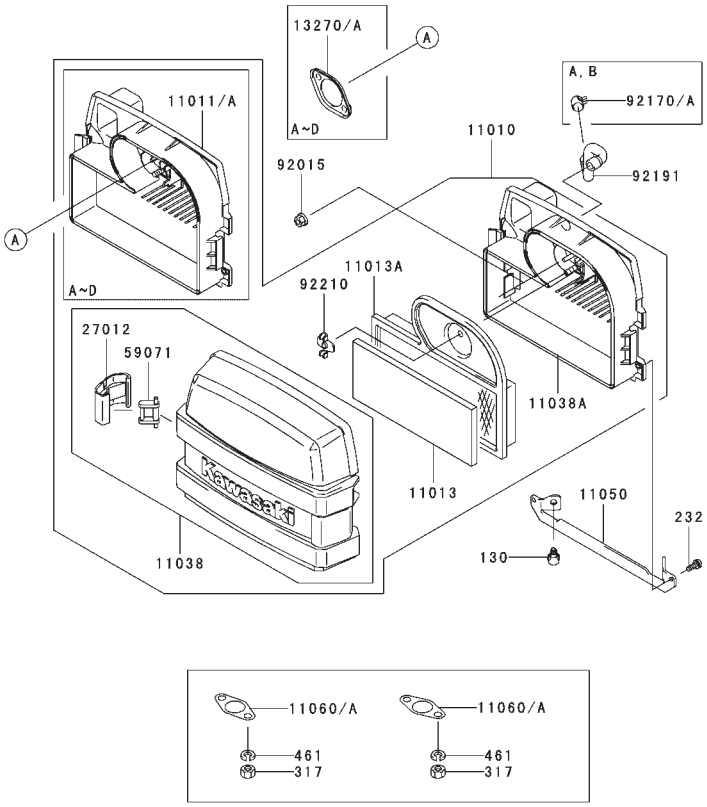

Air Filter/Muffler Assembly
Kawasaki FH500V–ES10

Ref. No.	Part No.	Qty.	Description
11010	11010–7001	1	Filter–Assy–Air
11013	11013–7001	1	Element–Air Filter
11013A	11013–7002	1	Element–Air Filter
11038	11038–7001	1	Case–Assy–Air Filter
11050	11050–7006	1	Bracket
11060A	11060–7021	2	Gasket, Muffler
27012	27012–7001	2	Hook, Air Filter
59071	59071–7001	2	Joint
92015	92015–1193	2	Nut
92191	92191–7001	1	Tube
92210	92210–7004	1	Nut
130	130B0612	2	Bolt–Flanged
232	232B0514	2	Screw–Pan–WS
317	317R0800	4	Nut–Hex–Small
461	461F0800	4	Washer–Spring

Ref. No.	Part No.	Qty.	Description

Obtain Parts From Kawasaki

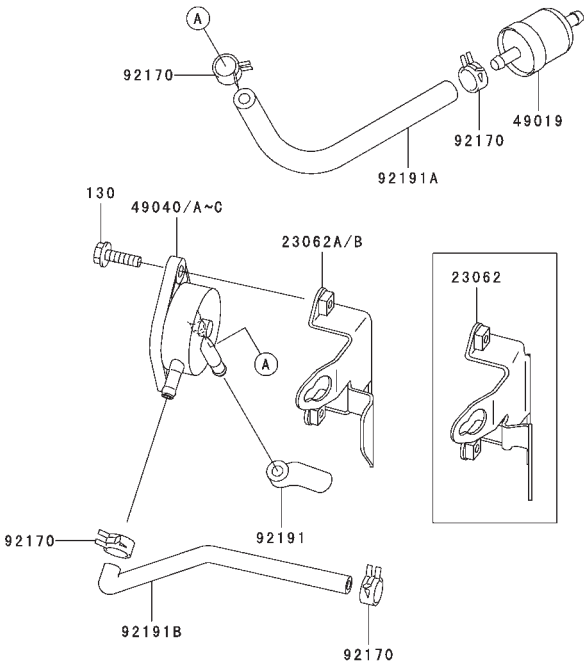

Fuel Tank/Fuel Valve Assembly
Kawasaki FH500V–ES10

Ref. No.	Part No.	Qty.	Description
23062A	23062–7004–9H	1	Bracket–Comp
49019	49019–7001	1	Filter–Fuel
49040B	49040–7001	1	Pump–Fuel
92170	92170–2088	4	Clamp
92191	92191–7002	1	Tube
92191A	92191–7003	1	Tube,6.35x12.7x160
92191B	92191–7004	1	Tube
130	130B0620	2	Bolt–Flanged

Ref. No.	Part No.	Qty.	Description

Obtain Parts From Kawasaki

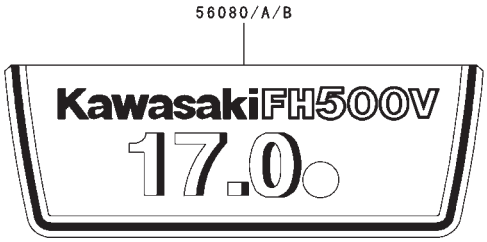

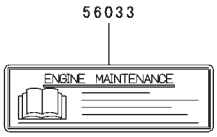

Label Assembly
Kawasaki FH500V–ES10

Ref. No.	Part No.	Qty.	Description
56033	56033–7001	1	Label–Manual
56080A	56080–7011	1	Label–Brand

Ref. No.	Part No.	Qty.	Description

Obtain Parts From Kawasaki

TORO®