1980

FORM NO. 3311-528

TORO®

MODEL 20790-0000001 & UP

PARTS CATALOG

21" S.P. REAR BAGGER KEY-LECTRIC®

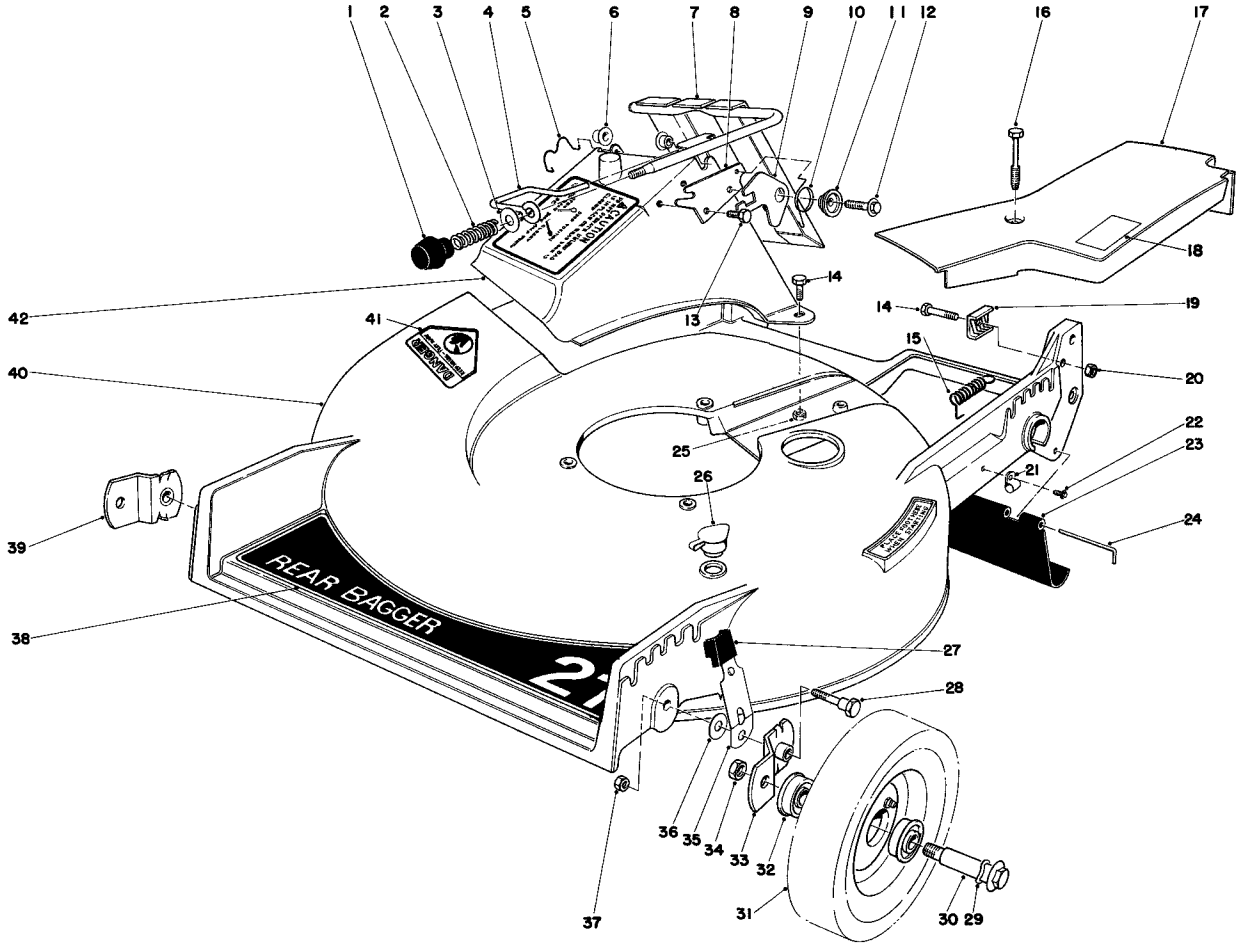

HOUSING ASSEMBLY

Ref. No.	Part No.	Description	No. Used
1	233-37	Knob	1
2	23-0920	Spring – Compression	1
3	23-1120	Washer	1
4	23-0940	Latch Door	1
5	33-4830	Door Retainer	1
6	23-0880	Bushing	2
7	33-5660	Door	1
8	23-1040	Latch Plate	1
9	23-1190	Safety Latch	1
10	33-4860	Torsion Spring	1
11	23-1180	Latch Spacer	1
12	11-9760	Thread Forming Screw	1
13	32104-17	Hex Hd. Self Tapping Screw	1
14	321-7	Capscrew	3
15	38-0040	Spring	1
16	37-7260	Screw	2

Ref. No.	Part No.	Description	No. Used
17	29-9712	Belt Cover	1
18	3311-299	Sticker Grease	1
19	29-9550	Cable Clamp	1
20	3218-1	Jam Nut	1
21	2412-52	Cable Clamp	1
22	32104-71	Hex Hd. Self Tapping Screw	1
23	29-9180	Rear Safety Shield	1
24	33-3203	Rod Shield	1
25	3296-42	Locknut	2
26	6-4500	Washout Plug	1
27	25-7740	Knob Arm	2
28	25-3440	Pivot Screw	2
29	3290-393	Wave Washer	2
30	3-2652	Wheel Bolt	2
31	38-6000	Wheel & Tire Assembly (Incl. Ref. #32)	2

COPYRIGHT © ALL RIGHTS RESERVED

The Toro Company – 1979
MINNEAPOLIS, MN 55420 – U.S.A.

PRICE $1.00

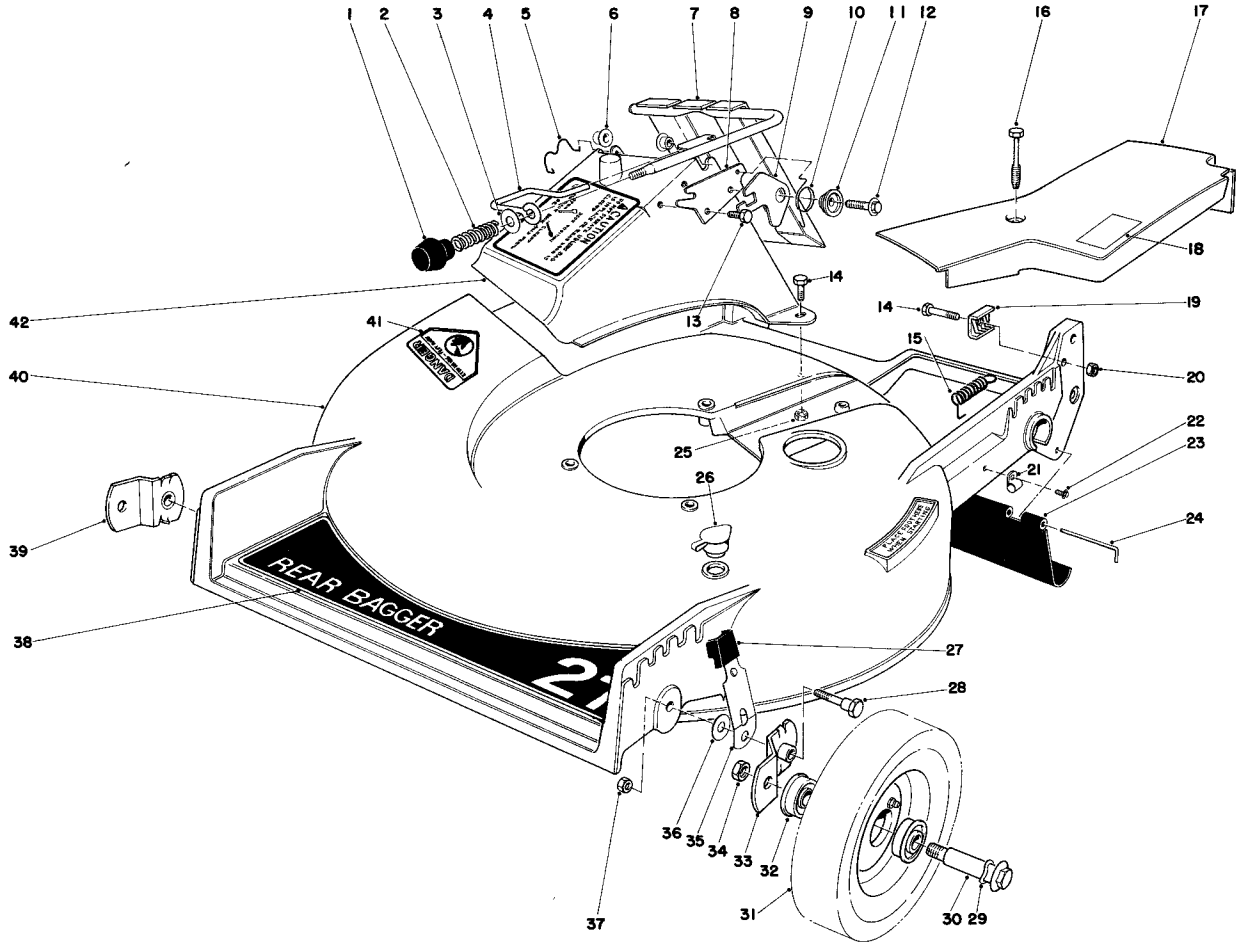

HOUSING ASSEMBLY (Continued)

Ref. No.	Part No.	Description	No. Used
32	251-180	Bearing	4
33	24-7710	Pivot Arm "A"	1
34	32146-6	Nut	2
35	33-4850	Spring Arm	2
36	5-4460	Pivot Washer	2
37	32146-5	Nut	2

Ref. No.	Part No.	Description	No. Used
38	40-2250	Decal – Rear Bagger	1
39	23-9120	Pivot Arm "B"	1
40	8-7919	Housing	1
41	39-5770	Decal – Danger	1
42	36-1350	Discharge Chute	1
*	8-7339	Loose Parts	1

*Not Illustrated

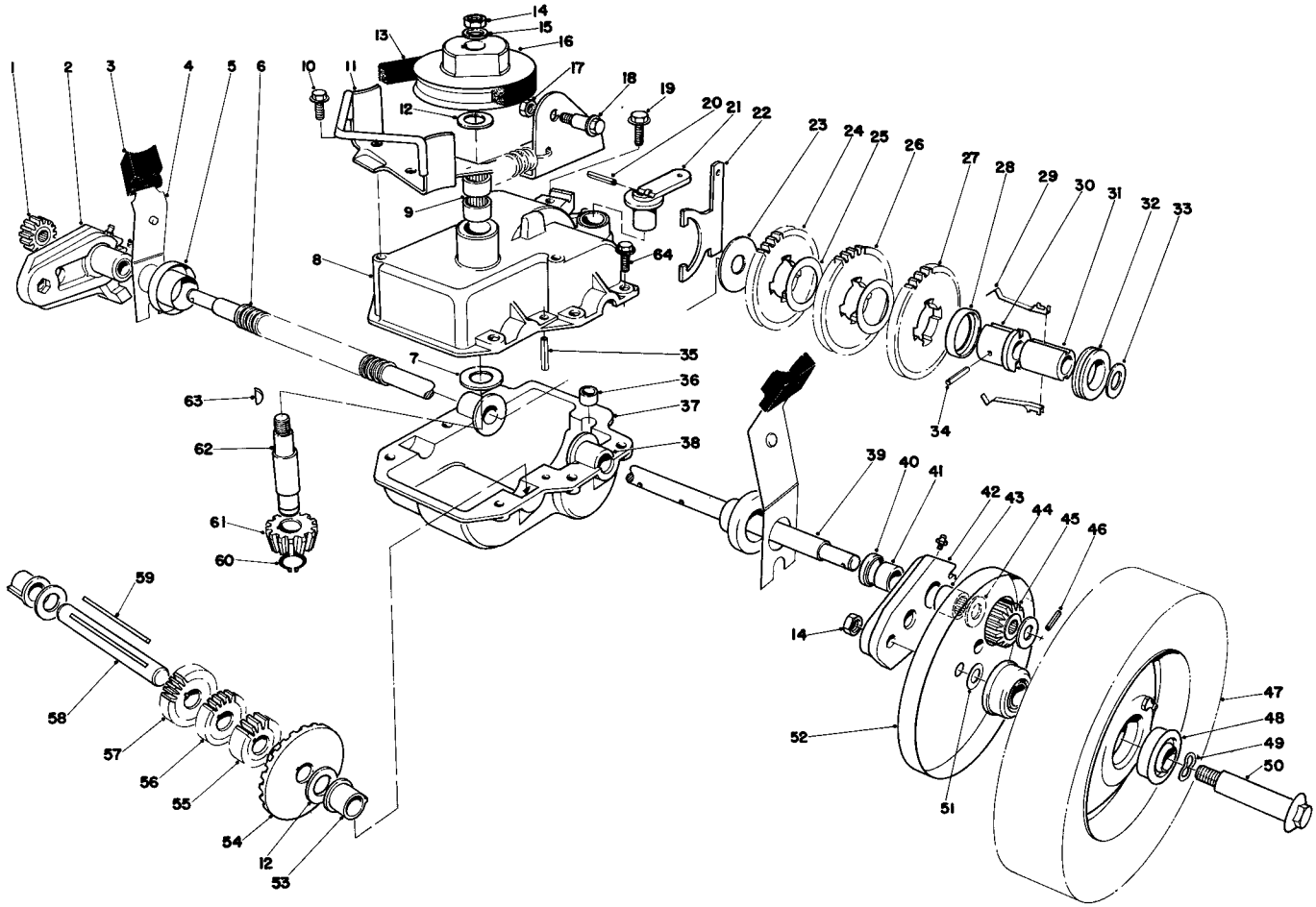

GEAR CASE ASSEMBLY

Ref. No.	Part No.	Description	No. Used
1	39-7740	Clutch & Pinion Assembly, R.H.	1
2	29-9590	Pivot Arm R.H. (Incl. Ref. #40, 41 & 43)	1
3	25-7740	Knob – Arm	2
4	29-9540	Spring Arm	2
5	3-2646	End Cap	2
6	24-7922	Drive Shaft Cover	1
7	256-196	Oilite Thrust Washer	1
8	39-7281	Upper Gear Case	1
9	252-97	Bearing	2
10	11-9760	Hex Head Screw	2
11	40-9730	Belt Guide Bracket	1
12	36-4790	Washer	3
13	36-8070	Belt	1
14	32146-6	Locknut	3
15	3256-45	Washer	1
16	39-6740	Pulley	1
17	32153-4	Nut	1
18	26-5620	Shoulder Bolt	1
19	32144-11	Screw Thread Forming	1
20	32121-99	Slotted Roll Pin	1
21	29-9560	Shift Lever	1
22	29-9520	Shift Yoke	1
23	29-9690	Washer	1
24	29-9250	Gear – 38 Tooth	1
25	36-4770	Gear Spacer	2
26	29-9260	Gear – 40 Tooth	1
27	29-9270	Gear – 42 Tooth	1
28	39-7830	Key Retainer	1
29	29-9330	Key	2
30	39-6730	Sleeve Body	1
31	39-6720	Sleeve	1
32	29-9340	Shift Collar	1
33	36-4780	Washer	1

Ref. No.	Part No.	Description	No. Used
34	32121-95	Coil Pin	1
35	32121-100	Roll Pin	1
36	29-9570	Yoke Bushing	1
37	29-9410	Lower Case	1
38	29-9310	Bushing – Output Shaft	2
39	29-9390	Output Shaft	1
40	253-140	Seal	2
41	256-110	Bushing	2
42	29-9640	Pivot Arm L.H. (Incl. Ref. #40, 41 & 43)	1
43	252-96	Needle Bearing	2
44	29-9700	Thrust Washer	4
45	39-7730	Clutch & Pinion Assembly L.H.	1
46	32121-98	Coil Pin	2
47	38-2930	Wheel & Tire Assy. (Incl. Ref. #48)	2
48	251-180	Bearing	4
49	3290-393	Wave Washer	2
50	26-4430	Wheel Bolt	2
51	40-1940	Washer – Wheel Bolt	2
52	36-5630	Wheel Cover	2
53	29-9350	Bushing – Short Shaft	2
54	39-6670	Gear Bevel	1
55	39-6630	Gear – 14 Tooth	1
56	39-6640	Gear – 16 Tooth	1
57	39-6650	Gear – 18 Tooth	1
58	39-6680	Short Shaft	1
59	39-7840	Key – Square	1
60	32151-57	Retaining Ring	1
61	39-6660	Pinion – Bevel	1
62	8-6799	Input Shaft & Pinion Assembly (Incl. Ref. #61)	1
63	3257-1	Key – Woodruff	2
64	32144-44	Screw Hex. Hd.	6
*	39-5800	Gear Case Assembly – Complete	1

*Not Illustrated

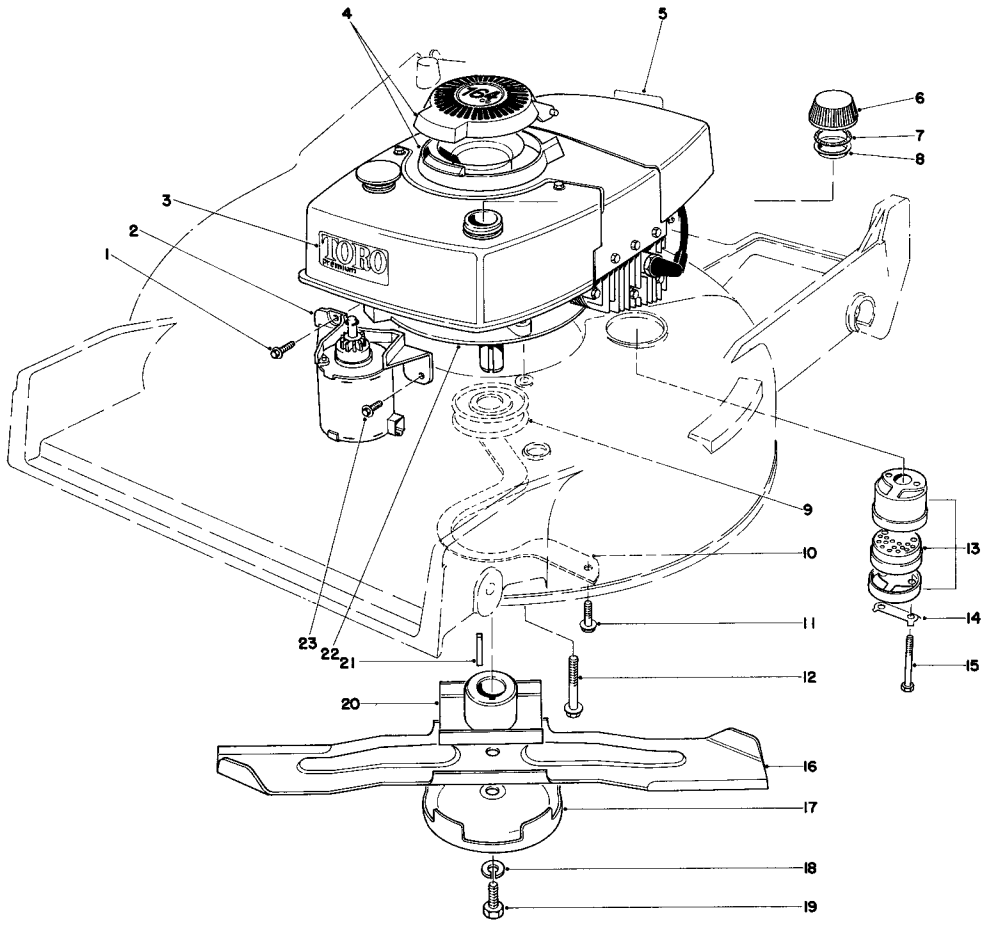

ENGINE ASSEMBLY

Ref. No.	Part No.	Description	No. Used
1	11-9760	Screw	1
2	25-3940	Starter Motor	1
3	40-2570	Decal — Engine	1
4	38-4720	Cover	1
5	37-1580	Decal — Maintenance	1
6	27-7870	Gas Cap (Incl. Ref. #7 & 8)	1
7	2210-144	Gasket	1
8	2210-143	Baffle	1
9	21-5580	Engine Pulley	1
10	39-1840	Belt Guide	1
11	11-9760	Thread Forming Screw	2
12	11-0590	Screw	3
13	5-4769	Muffler Assembly (Incl. Ref. 14 & 15)	1

Ref. No.	Part No.	Description	No. Used
14	3-5094	Locking Clip	1
15	321-20	Capscrew	2
16	26-0880	Blade 21"	1
17	8-4240	Anti-Scalp Cup	1
18	3253-22	Lockwasher	1
19	23-0080	Blade Screw	1
20	23-0110	Blade Retainer	1
21	27-8590	Square Key	1
22	221-614	Engine (Model TNT 100 - 10061C)	1
*	221-630	Engine (Model TNT 100 - 10065C)	1
23	12-3270	Screw Special	1
*	33-2930	Starter Rope	1

*Not Illustrated

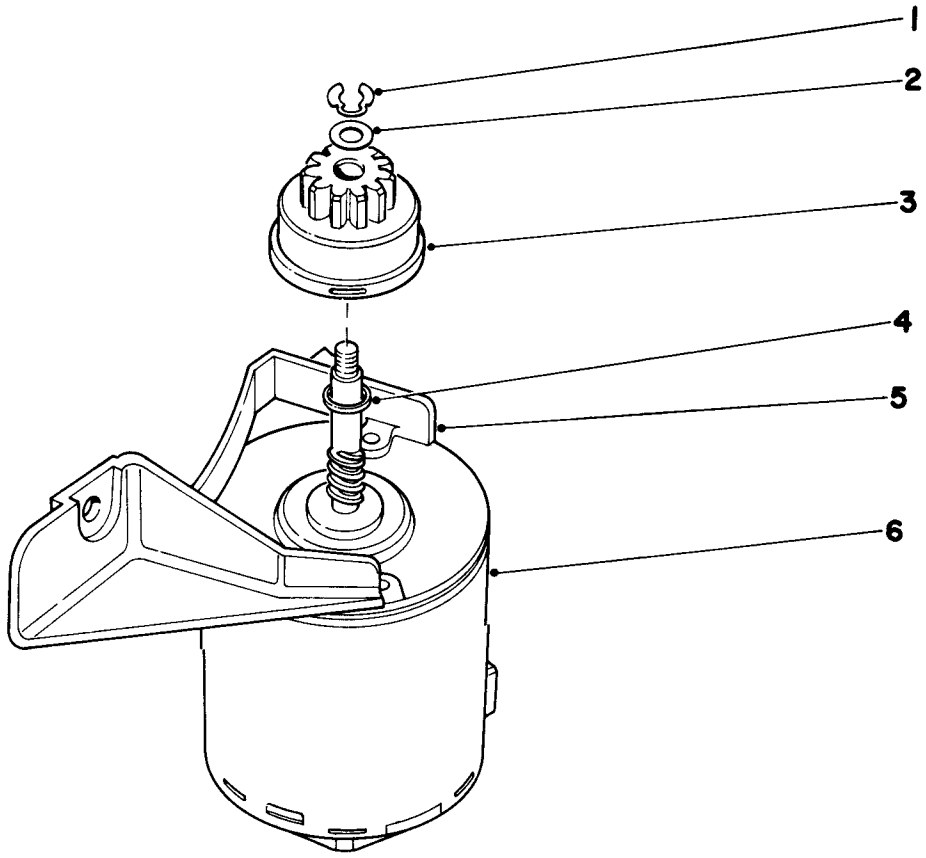

STARTER MOTOR

Ref. No.	Part No.	Description	No. Used
1	32151-47	Retaining Ring	1
2	25-3970	Washer	1
3	25-3960	Pinion Assembly	1
4	23-9590	Spacer	1

Ref. No.	Part No.	Description	No. Used
5	218-472	Mounting Bracket	1
6	25-3950	Starter Motor	1
*	25-3940	Starter Motor Assembly (Incl. Ref. #1-6)	1
*	218-494	End Plate w/Bushing	1

*Not Illustrated

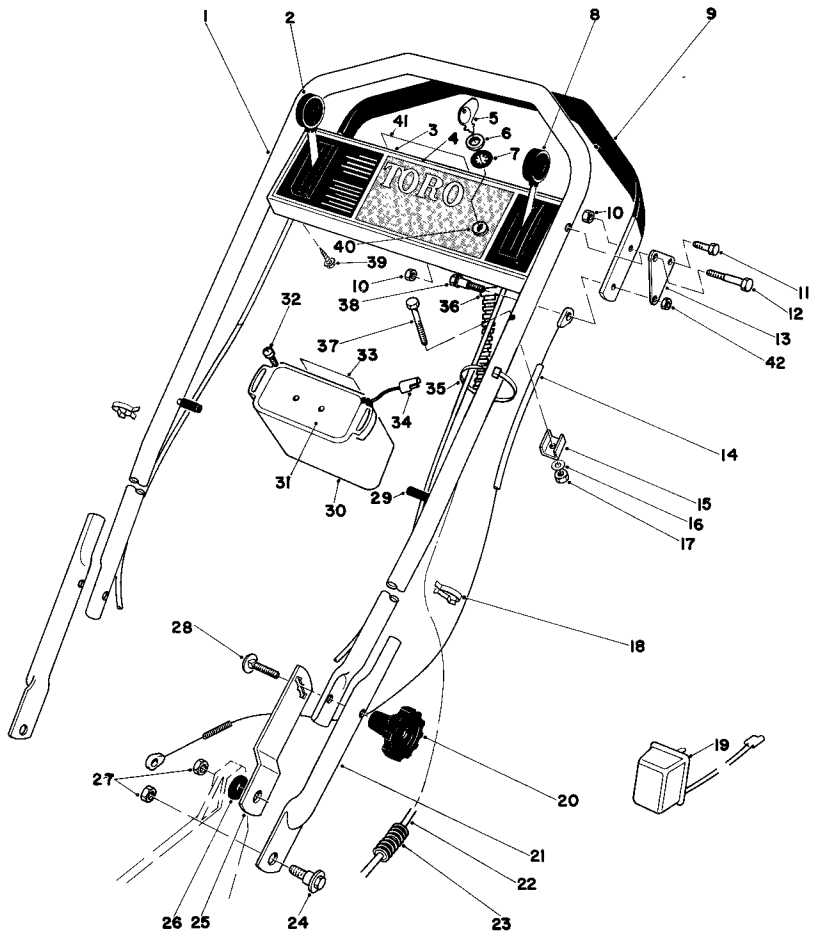

HANDLE ASSEMBLY

Ref. No.	Part No.	Description	No. Used
1	40-4860	Upper Handle	1
2	37-4721	Ground Speed Control	1
3	38-1191	Control Panel	1
4	40-8670	Decal — Key Lectric	1
5	218-412	Key (Set of 2)	1
6	218-461	Hex Nut	1
7	3254-5	Lockwasher	1
8	37-4712	Throttle Control	1
9	40-4840	Demand Handle	1
10	32152-4	Nut	5
11	321-3	Capscrew	3
12	36-2250	Shoulder Bolt	2
13	40-4850	Bracket — Demand	2
14	29-9502	Demand Handle Cable	1
15	29-9550	Cable Clamp	1
16	3256-1	Washer	1
17	3296-42	Locknut	1
18	218-465	Clip	2
19	6-9780	Charger	1
20	19-4050	Handle Knob	2
21	29-9160	Lower Handle	2
22	38-4680	Wiring Harness	1

Ref. No.	Part No.	Description	No. Used
23	38-6630	Wiring Harness Cover	1
24	27-7211	Shoulder Screw	4
25	36-8080	Handle Latch L.H.	1
*	36-8090	Handle Latch R.H.	1
26	3-3287	Spacer Handle Latch	2
27	32146-5	Nut	4
28	3230-5	Carriage Bolt	2
29	2410-49	Cap Vinyl	2
30	39-0640	Battery Container	1
31	39-0630	Cover	1
32	32104-129	Screw	2
33	36-5380	Decal	1
34	11-3790	Plug & Wire Assembly	1
35	3290-381	Cable Tie	1
36	2412-48	Clip Plain	2
37	321-9	Capscrew	1
38	26-5620	Shoulder Bolt	1
39	32104-76	Screw	2
40	21-5190	Starter Switch (Incl. Ref. #5-7)	1
41	41-8060	Decal — Select-a-Pace	1
42	32153-4	Nut	1
*	38-4180	Battery Pack (Incl. Ref. #30-34)	1

*Not Illustrated

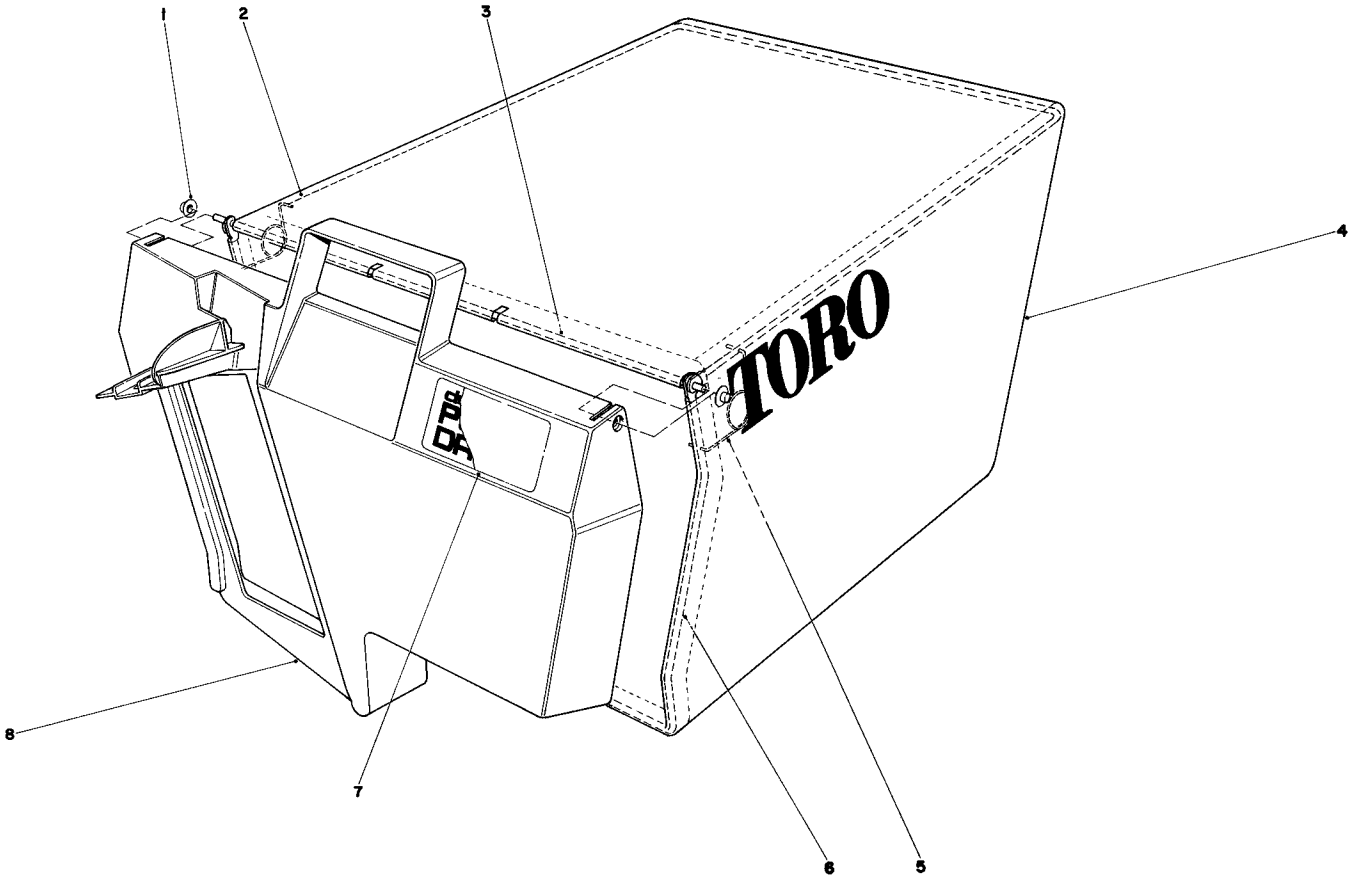

GRASS BAG ASSEMBLY

Ref. No.	Part No.	Description	No. Used
1	3290-422	Push Nut	2
2	36-6870	Bag Frame Upper	1
3	33-4820	Hinge Bag Door	1
4	8-2759	Grass Bag	1

Ref. No.	Part No.	Description	No. Used
5	36-6910	Spring	2
6	37-0480	Frame Bag	1
7	40-2240	Decal Bag Door	1
8	37-1390	Door Grass Bag	1

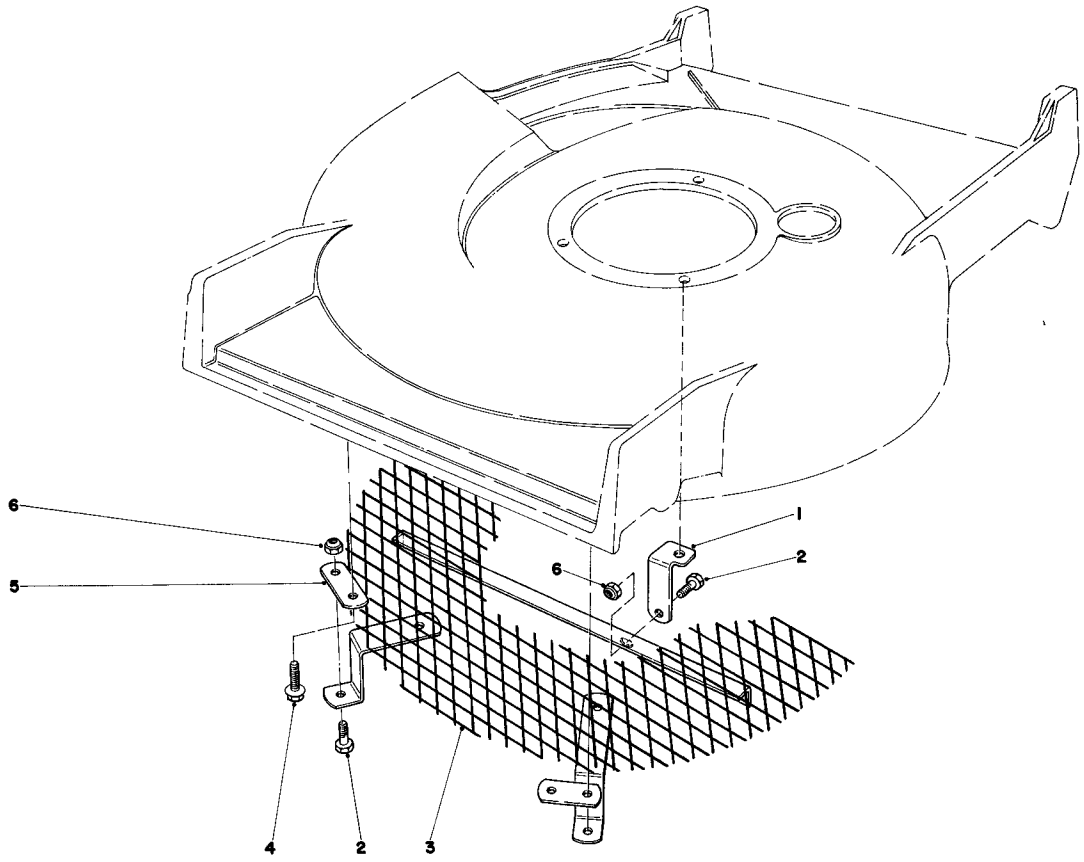

LEAF SHREDDER KIT NO. 59105 (OPTIONAL)

Ref. No.	Part No.	Description	No. Used
1	40-5040	Support Bracket	1
2	321-3	Hex Head Capscrew	3
3	39-1290	Screen	1

Ref. No.	Part No.	Description	No. Used
4	32144-11	Screw – Self Tapping	2
5	39-9690	Anchor	2
6	3296-42	Locknut	3

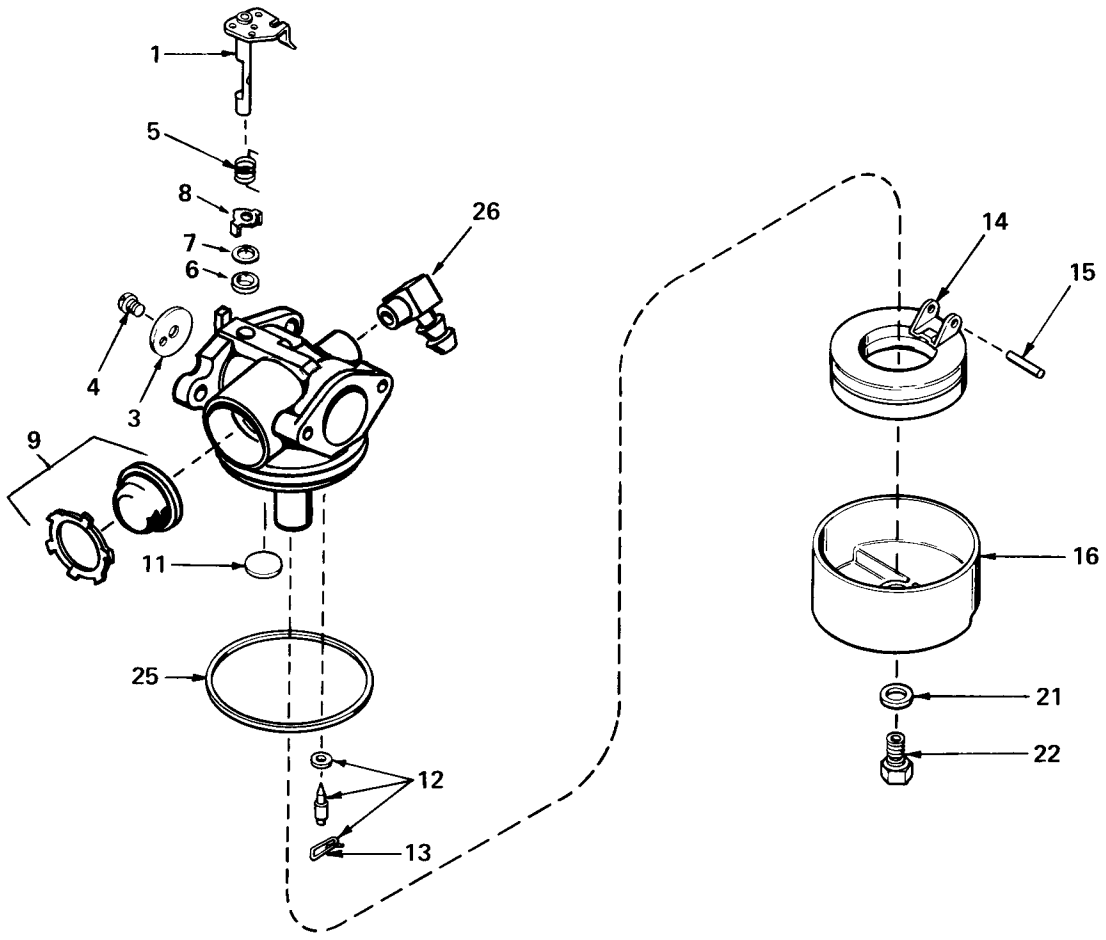

CARBURETOR NO. 632050

Ref. No.	Part No.	Description	No. Used
1	631615	Shaft & Lever Assy., Throttle	1
3	631616	Shutter, Throttle	1
4	650506	Screw, Throttle Shutter	1
5	632016	Spring, Return	1
6	631971	Seal, Dust	1
7	631184	Washer	1
8	631972	Retainer, Dust Seal	1
9	632047	Bulb & Retainer, Primer	1
11	631027	Plug, Welch	1
12	631021	Inlet Needle, Seat & Clip Assy. (Incl. #13)	1

Ref. No.	Part No.	Description	No. Used
13	631022	Clip, Inlet Needle	1
14	632019	Float, Carburetor	1
15	631024	Shaft, Float	1
16	631700	Bowl, Float	1
21	631334	Gasket, Bowl-to-body	1
22	631935	Nut, Float Bowl	1
25	631028	Gasket, Bowl-to-body	1
26	631807	Fitting, Fuel Inlet	1

ENGINE TECUMSEH MODEL NO. TNT 100-10061C

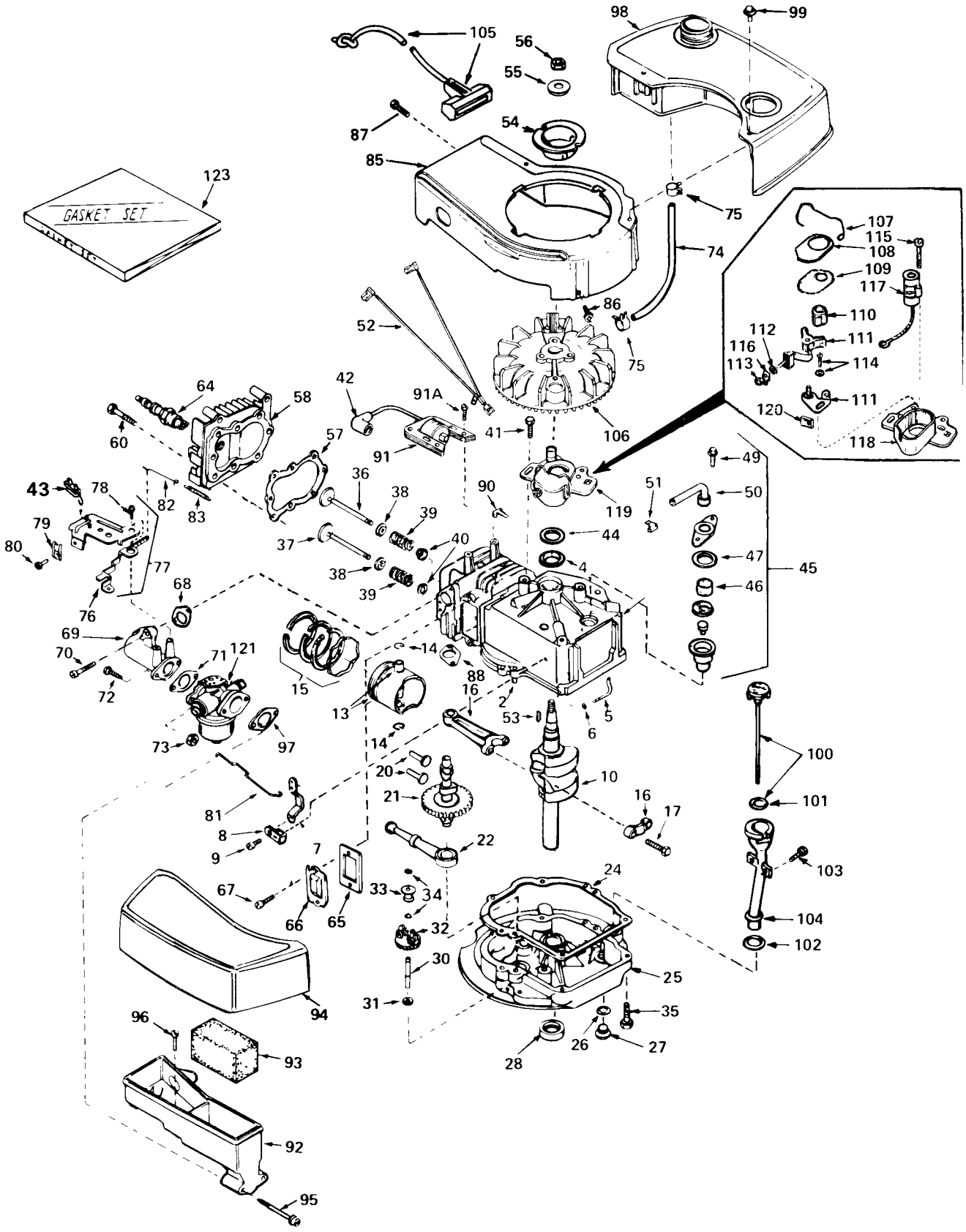

ENGINE TECUMSEH MODEL NO. TNT 100-10061C

Ref. No.	Part No.	Description	No. Used
1	34429	Cylinder Assy. (Incl. Ref. #2&4)	1
2	26727	Pin, Dowel	2
4	32600	Seal, Oil	1
5	30589	Rod, Governor (Incl. Ref. #6)	1
6	28277	Washer, Flat	1
7	32651	Lever, Governor	1
8	31335	Clamp, Governor Lever	1
9	650548	Screw, Hex Washer Hd.	1
10	34430	Crankshaft	1
13	32603B	Piston & Pin Assy. (Incl. Ref. #14) (Std.)	1
13	34520	Piston, Pin & Ring Assy. (Incl. Ref. #14 & 15) (Std.)	1
13	32604B	Piston & Pin Assy. (Incl. Ref. #14) (.010 Oversize)	1
13	34521	Piston, Pin & Ring Assy. (Incl. Ref. #14 & 15) (.010 Oversize)	1
13	32605B	Piston & Pin Assy. (Incl. Ref. #14) (.020 Oversize)	1
13	34522	Piston, Pin & Ring Assy. (Incl. Ref. #14 & 15) (.020 Oversize)	1
14	20381	Ring, Piston Pin Retaining	2
15	32606	Ring Set, Piston (Std.)	1
15	32607	Ring Set, Piston (.010 Oversize)	1
15	32608	Ring Set, Piston (.020 Oversize)	1
16	30963B	Rod Assy., Connecting (Incl. Ref. #17)	1
17	32610A	Bolt, Connecting Rod	2
20	27241	Lifter, Valve	2
21	33553	Camshaft (Mech. Comp. Release)	1
22	29914	Pump Assembly, Oil	1
24	*26750A	Gasket, Mounting Flange	1
25	30594B	Flange Assy., Mounting (Incl. Ref. #26 thru 30)	1
26	*28833	Gasket, Oil Drain Plug	1
27	27244	Plug, Oil Drain	1
28	26028	Seal, Oil	1
30	30574	Shaft, Mechanical Governor	1
31	30590A	Washer, Flat	1
32	30591	Gear Assy., Governor (Incl. Ref.#31)	1
33	30588A	Spool, Governor	1
34	29193	Ring, Retaining	2
35	650488	Screw, Hex Hd. Sems	6
36	29314A	Valve, Intake (Std.) (Incl. Ref. #38, 39 & 40)	1
36	29315B	Valve, Intake (1/32" Oversize) (Incl. Ref. #38, 39 & 40)	1
37	29313B	Valve, Exhaust (Std.) (Incl. Ref. #38, 39 & 40)	1
37	29315B	Valve, Exhaust (1/32" Oversize) (Incl. Ref. #38, 39 & 40)	1
38	31671	Cap, Upper Valve Spring	2
39	31672	Spring, Valve	2
40	31673	Cap, Lower Valve Spring	2
41	650489	Screw, Hex Hd. Sems	2
42	610118	Cover, Spark Plug	1
43	610973	Terminal Assembly	1
44	33876	Gasket, Stator	1
45	34214	Breather Assembly (Incl. Ref. #46, 47, 49, 50 & 51)	1
46	33734	Element, Breather	1
47	*33735	Gasket, Breather	1
49	650768	Screw, Hex Hd. Thread Forming W/Conical Washer	2
50	33886	Tube, Breather	1
51	33887	Clip, Breather Tube	1
52	34432	Wire, Ground	1
53	610995	Key, Flywheel	1
54	34461	Pulley, Starter	1
55	650815	Washer, Belleville	1
56	650816	Nut, Flywheel	1
57	*33015	Gasket, Cylinder Head	1
58	34342	Head, Cylinder	1

Ref. No.	Part No.	Description	No. Used
60	6021A	Screw, Hex Flange Hd.	8
64	33636	Plug, Spark (Champion J-8 or Equivalent) Except For Canada	1
64	34251 Canada	Resistor Spark Plug (Canadian Regulations Require RJ-17LM Resistor Spark Plug)	1
65	*27234	Gasket, Valve Spring Cover	1
66	32755	Cover, Valve Spring Box	1
67	650128	Screw, Fil. Hd. Sems	2
68	*32649	Gasket, Intake Pipe	1
69	33004	Pipe, Intake	1
70	650451	Screw, Hex Hd. Sems	2
71	*31688	Gasket, Carburetor	1
72	6201	Screw, Hex Hd.	2
73	29752	Nut & Lockwasher Assembly	2
74	30705	Line, Fuel	1
75	26460	Clamp, Fuel Line	2
76	34310	Lever, Control	1
77	33889A	Control Assembly, Speed (Incl. Ref. #43, 76 & 78)	1
78	650804	Screw, Hex Washer Hd. Shoulder Self-Tap	1
79	27793	Clip, Conduit	1
80	28942	Screw, Hex Washer Hd. Sems	1
81	34336	Link, Governor-To-Throttle	1
82	33151	Link, Governor Spring	1
83	33890	Spring, Governor	1
85	33907A	Housing, Blower	1
86	650497	Screw, Flex Pan Hd.	2
87	30200	Screw, Hex Washer Hd. Self-Tap Sems	2
88	*30081	Gasket, Exhaust	1
90	29443	Clip, Fuel Line	1
91	34431	Lamination & Coil Assembly (Incl. Ref. #42)	1
91A	650814	Screw, Hex Washer Hd. Sems	2
92	33895	Body, Air Cleaner	1
93	33896	Filter, Air Cleaner	1
94	33897	Cover, Air Cleaner	1
95	650762	Screw, Fil. Hd. Sems	2
96	650784	Screw, Hex Hd. W/Flatwasher Taptite	1
97	*33051	Gasket, Air Cleaner	1
98	33904A	Tank, Fuel	1
99	28763	Screw, Hex Washer Hd. Shakeproof	2
100	33894A	Dipstick, Oil (Incl. Ref. #101) (Twist Lock)	1
101	33590	"O" Ring	1
102	34265	Gasket	1
103	650562	Screw, Hex Washer Hd. Shakeproof	2
104	34380	Tube, Oil Filler (Plastic)	1
105	590343	Rope Assembly, Starter	1
106	611010	Flywheel	1
107	30551	Spring, Breaker Box Dust Cover	1
108	610947	Cover, Breaker Box Dust	1
109	610955	Gasket, Dust Cover	1
110	30992	Cam, Breaker	1
111	30547A	Breaker Assembly	1
112	610385	Washer, Terminal	1
113	610408	Nut, Terminal	1
114	29181	Screw & Washer Assembly, Breaker	1
115	610593	Screw, Condenser Fastening	1
116	33356	Tab, Ground Terminal	1
117	30548B	Condenser	1
118	611008	Stator Plate	1
119	611006	Stator Plate Assembly (Incl. Ref. #107, 111 thru 118 & 120)	1
120	30549	Felt, Cam Wiper	1
121	632050	Carburetor (Incl. Ref. #71)	1
123	33906	Gasket Set (Incl. Items Marked *)	1

ENGINE TECUMSEH MODEL NO. TNT 100-10065C

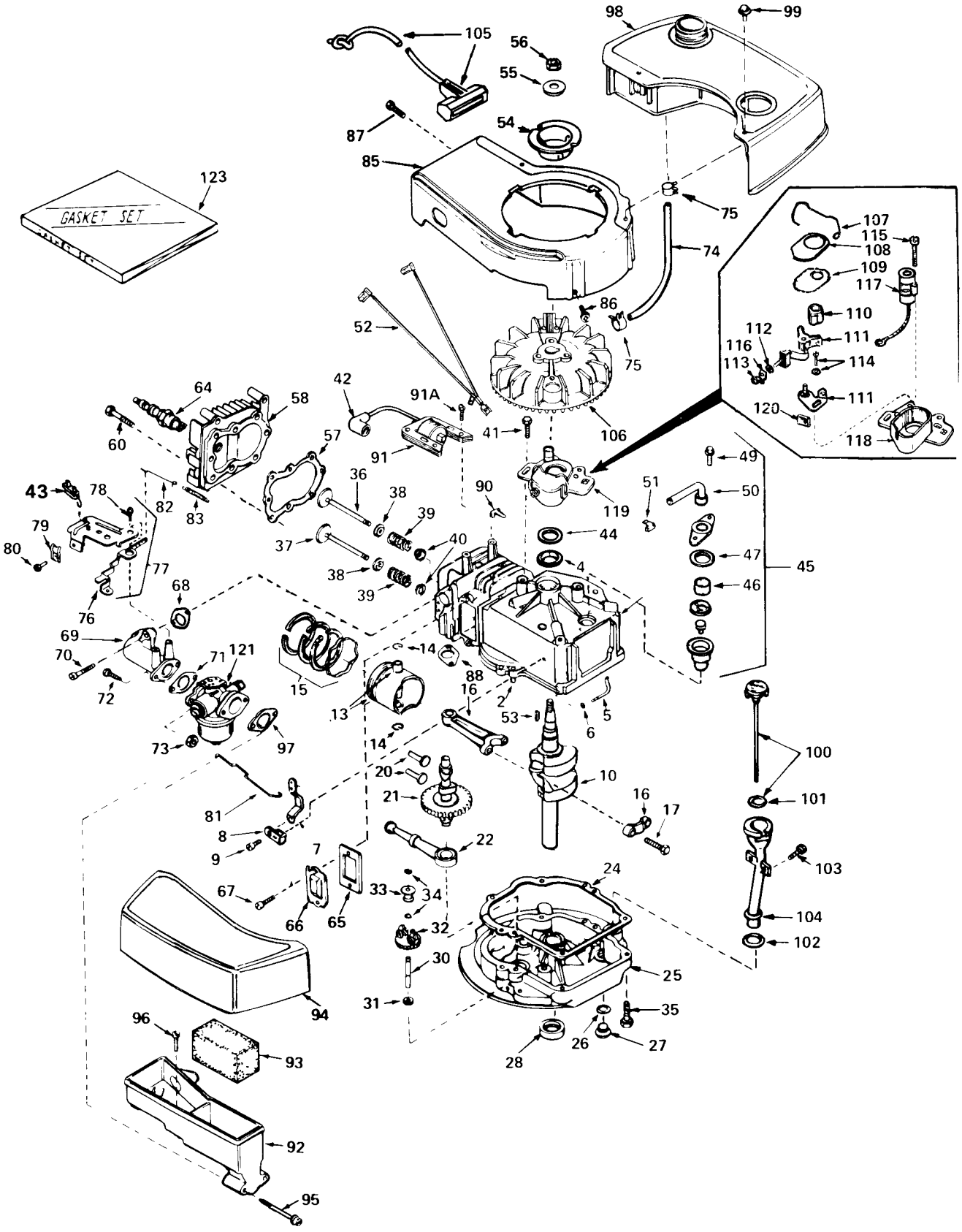

ENGINE TECUMSEH MODEL NO. TNT 100-10065C

Ref. No.	Part No.	Description	No. Used
1	34429	Cylinder Assy. (Incl. Ref. #2 & 4)	1
2	26727	Pin, Dowel	2
4	32600	Seal, Oil	1
5	30589	Rod, Governor (Incl. Ref. #6)	1
6	28277	Washer, Flat	1
7	32651	Lever, Governor	1
8	31335	Clamp, Governor Lever	1
9	650548	Screw, Hex Washer Hd.	1
10	34430	Crankshaft	1
13	32603B	Piston & Pin Assy. (Incl. Ref. #14) (Std.)	1
13	34520	Piston, Pin & Ring Assy. (Incl. Ref. #14 & 15) (Std.)	1
13	32604B	Piston & Pin Assy. (Incl. Ref. #14) (.010 Oversize)	1
13	34521	Piston, Pin & Ring Assy. (Incl. Ref. #14 & 15) (.010 Oversize)	1
13	32605B	Piston & Pin Assy. (Incl. Ref. #14) (.020 Oversize)	1
13	34522	Piston, Pin & Ring Assy. (Incl. Ref. #14 & 15) (.020 Oversize)	1
14	20381	Ring, Piston Pin Retaining	2
15	32606	Ring Set, Piston (Std.)	1
15	32607	Ring Set, Piston (.010 Oversize)	1
15	32608	Ring Set, Piston (.020 Oversize)	1
16	30963B	Rod Assy., Connecting (Incl. Ref. #17)	1
17	32610A	Bolt, Connecting Rod	2
20	27241	Lifter, Valve	2
21	33553	Camshaft (Mech. Compression Release)	1
22	29914	Pump Assy., Oil	1
24	*26750A	Gasket, Mounting Flange	1
25	30594B	Flange Assy., Mounting (Incl. Ref. #26 thru 30)	1
26	*28833	Gasket, Oil Drain Plug	1
27	27244	Plug, Oil Drain	1
28	26208	Seal, Oil	1
30	30574	Shaft, Mechanical Governor	1
31	30590A	Washer, Flat	1
32	30591	Gear Assy., Governor (Incl. Ref. #31)	1
33	30588A	Spool, Governor	1
34	29193	Ring, Retaining	2
35	650488	Screw, Hex Hd. Sems	6
36	29314A	Valve, Intake (Std.) (Incl. Ref. #38, 39 & 40)	1
36	29315B	Valve, Intake (1/32" Oversize) (Incl. Ref. #38, 39 & 40)	1
37	29313B	Valve, Exhaust (Std.) (Incl. Ref. #38, 39 & 40)	1
37	29315B	Valve, Exhaust (1/32" Oversize) (Incl. Ref. #38, 39 & 40)	1
38	31671	Cap, Upper Valve Spring	2
39	31672	Spring, Valve	2
40	31673	Cap, Lower Valve Spring	2
41	650489	Screw, Hex Hd. Sems	2
42	610118	Cover, Spark Plug	2
43	610973	Terminal Assy.	1
44	33876	Gasket, Stator	1
45	34214	Breather Assy. (Incl. Ref. #46, 47, 49, 50 & 51)	1
46	33734	Element, Breather	1
47	*33735	Gasket, Breather	1
49	650768	Screw, Hex Hd. Thread Forming w/Conical Washer	2
50	33886	Tube, Breather	1
51	33887	Clip, Breather Tube	1
52	34432	Wire, Ground	1
53	610995	Key, Flywheel	1
54	34461	Pulley, Starter	1
55	650815	Washer, Belleville	1
56	650816	Nut, Flywheel	1

Ref. No.	Part No.	Description	No. Used
57	*33015	Gasket, Cylinder Head	1
58	34342	Head, Cylinder	1
60	6021A	Screw, Hex Flange Hd.	8
64	33636	Plug, Spark (Champion J-8 or equivalent (Except for Canada)	1
64	34251 Canada	Resistor Spark Plug (Canadian Regulations require RJ-17LM Resistor Spark Plug)	1
65	*27234	Gasket, Valve Spring Cover	1
66	32755	Cover, Valve Spring Box	1
67	650128	Screw, Fil. Hd. Sems	2
68	*32649	Gasket, Intake Pipe	1
69	33004	Pipe, Intake	1
70	650451	Screw, Hex Hd. Sems	2
71	*31688	Gasket, Carburetor	1
72	6201	Screw, Hex Hd.	2
73	29752	Nut & Lockwasher Assy.	2
74	30705	Line, Fuel	1
75	26460	Clamp, Fuel Line	2
76	34310	Lever, Control	1
77	33889A	Control Assy., Speed (Incl. Ref. #43, 76 & 78)	1
78	650804	Screw, Hex Washer Hd. Shoulder Self-Tap	1
79	27793	Clip, Conduit	1
80	28942	Screw, Hex Washer Hd. Sems	1
81	34336	Link, Governor-to-Throttle	1
82	33151	Link, Governor Spring	1
83	33890	Spring, Governor	1
85	33907A	Housing, Blower	1
86	650497	Screw, Flex Pan Hd.	2
87	30200	Screw, Hex Washer Hd. Self-Tap Sems	2
88	*30081	Gasket, Exhaust	1
90	29443	Clip, Fuel Line	1
91	34431	Lamination & Coil Assy. (Incl. Ref. #42)	1
91A	650814	Screw, Hex Washer Hd. Sems	2
92	33895	Body, Air Cleaner	1
93	33896	Filter, Air Cleaner	1
94	33897	Cover, Air Cleaner	1
95	650762	Screw, Fil. Hd. Sems	2
96	650784	Screw, Hex Hd. w/Flatwasher Taptite	1
97	*33051	Gasket, Air Cleaner	1
98	33904A	Tank, Fuel	1
99	28763	Screw, Hex Washer Hd. Shakeproof	2
100	33894A	Dipstick, Oil (Incl. Ref. #101) (Twist Lock)	1
101	33590	"O" Ring	1
102	34265	Gasket	1
103	650562	Screw, Hex Washer Hd. Shakeproof	2
104	34380	Tube, Oil Filler (Plastic)	1
105	590343	Rope Assy., Starter	1
106	611010	Flywheel	1
107	30551	Spring, Breaker Box Dust Cover	1
108	610947	Cover, Breaker Box Dust	1
109	610955	Gasket, Dust Cover	1
110	30992	Cam, Breaker	1
111	30547A	Breaker Assy.	1
112	610385	Washer, Terminal	1
113	610408	Nut, Terminal	1
114	29181	Screw & Washer Assy., Breaker	1
115	610593	Screw, Condenser Fastening	1
116	33356	Tab, Ground Terminal	1
117	30548B	Condenser	1
118	611008	Stator Plate	1
119	611006	Stator Plate Assy. (Incl. Ref. # 107, 111 thru 118 & 120)	1
120	30549	Felt, Cam Wiper	1
121	632050	Carburetor (Incl. Ref. #71)	1
123	33906	Gasket Set (Include items marked *)	1

The Toro Promise

A ONE YEAR LIMITED WARRANTY

The Toro Company promises to repair any TORO Product if defective in materials or workmanship. The following time periods from the date of purchase apply:

Residential Product	1 Year
Residential Products Used Commercially . . .	45 Days

The costs of parts and labor are included, but the customer pays the transportation costs. Just return any residential product to an Authorized TORO Service Dealer or TORO Distributor.

Should you feel your TORO Product is defective and wish to rely on The Toro Promise, the following procedure is recommended:

1. Contact any Authorized TORO Service Dealer, TORO Master Service Dealer, or TORO Distributor (the Yellow Pages of your telephone directory is a good reference source).
2. He will either instruct you to return the product to him or recommend another Authorized TORO Service outlet which might be more convenient.
3. Bring the product along with your original sales slip, or other evidence of purchase date, to the service dealer.
4. The servicing dealer will inspect the unit, advise you whether the product is defective and, if so, make all repairs necessary to correct the defect without extra charge to you.

If for any reason you are dissatisfied with the dealer's analysis of the defect or the service performed, you may contact us.

Write:

TORO Consumer Service Department
8111 Lyndale Avenue South
Minneapolis, Minnesota 55420

The above remedy of product defects through repair by an Authorized TORO Service Dealer is the purchaser's sole remedy for any defect.

THERE IS NO OTHER EXPRESS WARRANTY. ALL IMPLIED WARRANTIES OF MERCHANTABILITY AND FITNESS FOR USE ARE LIMITED TO THE DURATION OF THE EXPRESS WARRANTY.

Some states do not allow limitations on how long an implied warranty lasts, so the above limitation may not apply to you.

This warranty applies only to parts or components which are defective and does not cover repairs necessary due to normal wear, misuse, accidents, or lack of proper maintenance. Regular, routine maintenance of the unit to keep it in proper operating condition is the responsibility of the owner.

All warranty repairs reimbursable under The Toro Promise must be performed by an Authorized TORO Service Dealer using Toro approved replacement parts.

Repairs or attempted repairs by anyone other than an Authorized TORO Service Account are not reimbursable under The Toro Promise. In addition, these unauthorized repair attempts may result in additional malfunctions, the correction of which is not covered by warranty.

THE TORO COMPANY IS NOT LIABLE FOR INDIRECT, INCIDENTAL OR CONSEQUENTIAL DAMAGES IN CONNECTION WITH THE USE OF THE PRODUCT INCLUDING ANY COST OR EXPENSE OF PROVIDING SUBSTITUTE EQUIPMENT OR SERVICE DURING PERIODS OF MALFUNCTION OR NON-USE.

Some states do not allow the exclusion or limitation of incidental or consequential damages, so the above limitation or exclusion may not apply to you.

This warranty gives you specific legal rights, and you may also have other rights which vary from state to state.

COUNTRIES OTHER THAN THE UNITED STATES OR CANADA

Customers who have purchased TORO products exported from the United States or Canada should contact their TORO Distributor (Dealer) to obtain guarantee policies for your country, province or state. If for any reason you are dissatisfied with your Distributor's service or have difficulty obtaining guarantee information, contact the TORO importer. If all other remedies fail, you may contact us at The Toro Company.

International Group
Service Department
One Corporate Center
7401 Metro Boulevard
Minneapolis, Minnesota 55435 U.S.A.

Compliance with Radio Interference Regulations Certified.
Certifie Conforme au Reglement sur le Brouillage Radioelectrique.

PRODUCT CHANGES

In an effort to make improvements available to TORO owners as quickly as possible, minor changes are incorporated into Toro's products from time to time that do not become immediately shown in the Parts Catalog. If such a change apparently has been made in your unit, which is not reflected in your manual, see your TORO Distributor or his Authorized TORO Service Dealer for information and part numbers.

IDENTIFICATION AND ORDERING

Model and Serial Numbers

The Mower has two identification numbers: a model number and a serial number. The two numbers are stamped on a decal which is located on the mower housing between the rear wheels. In any correspondence concerning the mower, supply model and serial numbers to assure that correct information and replacement parts are obtained.

To order replacement parts from an Authorized TORO Service Dealer, supply the following information:

1. Model and serial numbers of the mower.
2. Part number, description, and quantity of part(s) desired.

Note: Do not order by reference number if a parts catalog is being used; use the PART NUMBER.

Keep Your TORO All Toro Genuine TORO PARTS & ACCESSORIES ***Insist on Genuine Toro Parts***

MAINTENANCE RECORD

Date	Hours Used	Oil Change	Air Cleaner Service	Lubrication	Winter Storage	Spring Service	Spark Plug Gap

MAINTENANCE RECORD

Date	Hours Used	Oil Change	Air Cleaner Service	Lubrication	Winter Storage	Spring Service	Spark Plug Gap