Form No. 3327-696

Roll-Over Protection Kit

Greensmaster® 3200, 3200-D, and 3250-D

Model No. 04552

Installation Instructions

Caution

If you leave the key in the ignition switch, someone could accidently start the engine and seriously injure you or other bystanders.

Remove the key from the ignition and disconnect the wire(s) from the spark plug(s) before you do any maintenance. Set the wire(s) aside so that it does not accidentally contact the spark plug(s).

Installing the Seat Belts

1. Attach each end of the seat belt to the holes in the back of the seat with screws (7/16 x 1 in.) and lock washers (7/16 in.) (Fig. 1). Tighten them securely. Mount the latch side of the belt to the left side of the seat.

Note: When operating the machine, always use the seat belt and ROPS together.

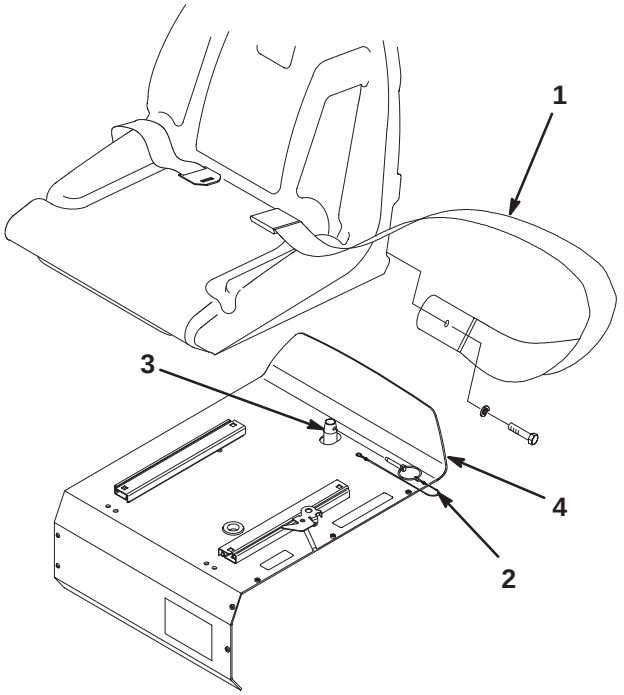

Figure 1

1. Seat belt
2. Lynch pin
3. Seat pin
4. Seat support

2. Install the lynch pin into the seat pin to secure the seat support (Fig. 1).

Installing the ROPS

1. Lower the ROPS frame onto the mounting brackets, aligning the mounting holes as shown in Figure 2.

Note: To allow installation of the ROPS mounting nut on the right side of the machine, the double clamp holding the steering cylinder hoses next to the ROPS support must be rotated 180°.

2. Secure each side of the roll bar to the mounting brackets with 2 bolts (5/8 x 4-1/2 in.) and locknuts (Fig. 2). Torque the fasteners to 135–165 ft.-lb. (183–224 N·m).

Note: When operating the machine, always use the seat belt and ROPS together.

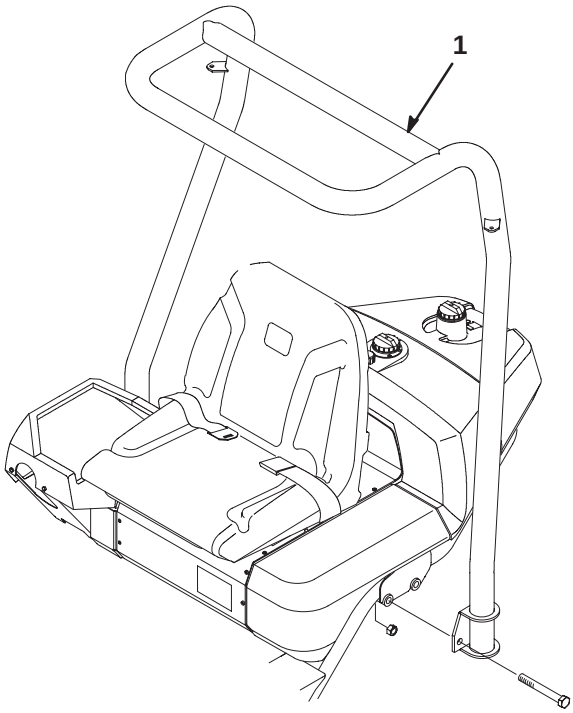

Figure 2

1. ROPS

© 2002 by The Toro Company
8111 Lyndale Avenue South
Bloomington, MN 55420-1196

All Rights Reserved
Printed in the USA