Form No. 3460-295 Rev A

TORO®

Count on it.

Operator's Manual

Finger Deck

Versa-Vac

Model No. 07081—Serial No. 403265001 and Up

Register at www.Toro.com.
Original Instructions (EN)

CE UK CA

3460-295

This product complies with all relevant European directives. For details, please see the Declaration of Incorporation (DOI) at the back of this publication.

⚠ WARNING

CALIFORNIA
Proposition 65 Warning

Use of this product may cause exposure to chemicals known to the State of California to cause cancer, birth defects, or other reproductive harm.

Introduction

This finger deck works in conjunction with the VersaVac vacuum to pick up debris and loose materials from golf courses and other large areas of maintained grass. Using this product for purposes other than its intended use could prove dangerous to you and bystanders.

Read this information carefully to learn how to operate and maintain your product properly and to avoid injury and product damage. You are responsible for operating the product properly and safely.

Visit www.Toro.com for product safety and operation training materials, accessory information, help finding a dealer, or to register your product.

Whenever you need service, genuine Toro parts, or additional information, contact an Authorized Service Dealer or Toro Customer Service and have the model and serial numbers of your product ready. Write the numbers in the space provided.

Model No. _____

Serial No. _____

This manual identifies potential hazards and has safety messages identified by the safety-alert symbol (Figure 1), which signals a hazard that may cause serious injury or death if you do not follow the recommended precautions.



g000502

Figure 1
Safety-alert symbol

This manual uses 2 words to highlight information. **Important** calls attention to special mechanical information and **Note** emphasizes general information worthy of special attention.

Contents

Safety 3
General Safety 3
Safety and Instructional Decals 3
Setup 4
Installing the Finger Deck 4
Product Overview 5
Specifications 5
Attachments/Accessories 5
Before Operation 6
Before Operation Safety 6
Checking the Tire Pressure 6
Adjusting the Operating Height 6
During Operation 7
During Operation Safety 7
Operating Tips 8
After Operation 8
After Operation Safety 8
Cleaning the Machine 8
Maintenance 9
Recommended Maintenance Schedule(s) 9
Maintenance Safety 9
Greasing the Machine 9
Adjusting the Drive Belt 10
Replacing the Finger Belts 11

© 2022—The Toro® Company

8111 Lyndale Avenue South
Bloomington, MN 55420

Contact us at www.Toro.com.
Printed in the USA
All Rights Reserved

Safety

General Safety

This product is capable of amputating hands and feet and of throwing objects. Always follow all safety instructions to avoid serious personal injury.

Using this product for purposes other than its intended use could prove dangerous to you and bystanders.

- Read and understand the contents of this *Operator's Manual* before using the machine.
- Use your full attention while operating the machine. Do not engage in any activity that causes distractions; otherwise, injury or property damage may occur.
- Do not put your hands or feet near moving components of the machine.
- Do not operate the machine without all guards and other safety protective devices in place and functioning properly on the machine.
- Keep clear of any discharge opening. Keep bystanders and pets away from the machine.
- Keep bystanders and children out of the operating area. Never allow children to operate the machine.
- Shut off the engine of the traction unit, remove the key (if equipped), and wait for all movement to stop. Allow the machine to cool before adjusting, servicing, cleaning, or storing the machine.

Improperly using or maintaining this machine can result in injury. To reduce the potential for injury, comply with these safety instructions and always pay attention to the safety-alert symbol ⚠, which means Caution, Warning, or Danger—personal safety instruction. Failure to comply with these instructions may result in personal injury or death.

Safety and Instructional Decals

Safety decals and instructions are easily visible to the operator and are located near any area of potential danger. Replace any decal that is damaged or missing.

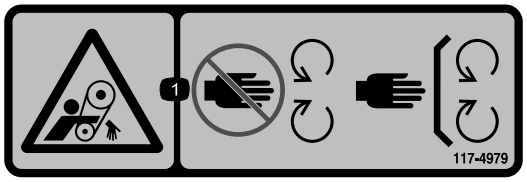

decal117-4979

117-4979

1. Entanglement hazard, belt—keep away from moving parts; keep all guards and shields in place.

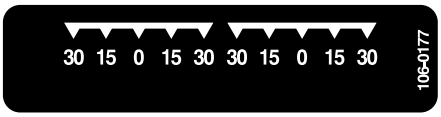

decal106-0177

106-0177



decal106-0178

106-0178

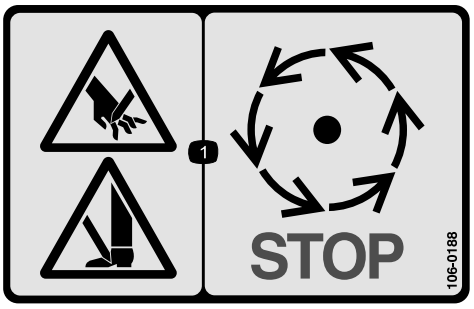

decal106-0188

106-0188

1. Cutting hazard of hand or foot—wait for moving parts to stop.



decal133-8061

133-8061

Setup

Loose Parts

Use the chart below to verify that all parts have been shipped.

Description	Qty.	Use
No parts required	–	Install the finger deck.

Media and Additional Parts

Description	Qty.	Use
Operator's Manual	1	Review the manual and save in an appropriate place
Registration card	1	Fill out and return to Toro.

Note: Determine the left and right sides of the machine from the normal operating position.

Installing the Finger Deck

1. Roll the deck under the Versa Vac. Ensure that the hydraulic motor is on the left side.
2. Slide the tow arms onto the frame pins. Secure each tow arm to the frame pin with a washer and hairpin cotter (Figure 2).

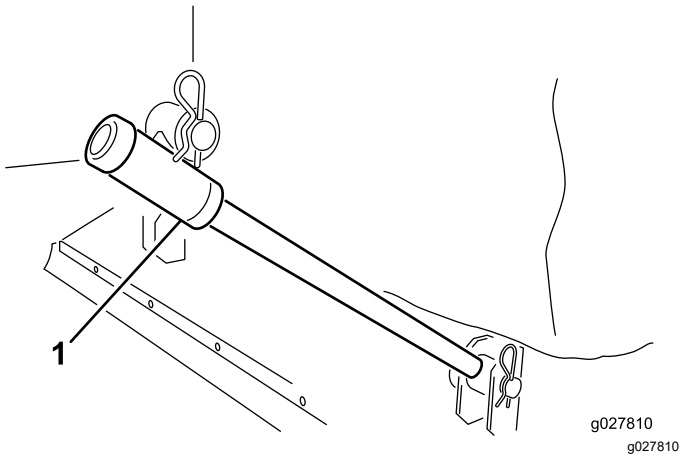

Figure 2

1. Tow arm

3. Connect each lift chain to the corresponding deck bracket with a clevis pin and hairpin cotter (Figure 3).

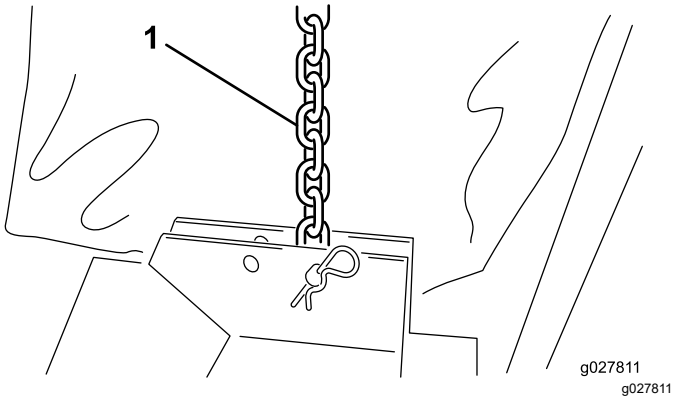

Figure 3

1. Lift chain

4. Install the canvas ring around the lip on the Versa Vac and deck openings (Figure 4).

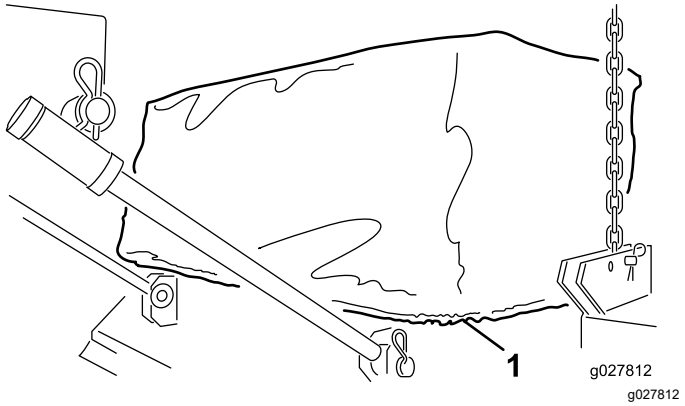

Figure 4

1. Canvas ring

5. Connect the hydraulic motor hose quick couplers to the Versa Vac couplers as shown in Figure 5.

   Note: Verify that the fingers rotate. The fingers should rotate clockwise (as viewed from the motor end of the deck).

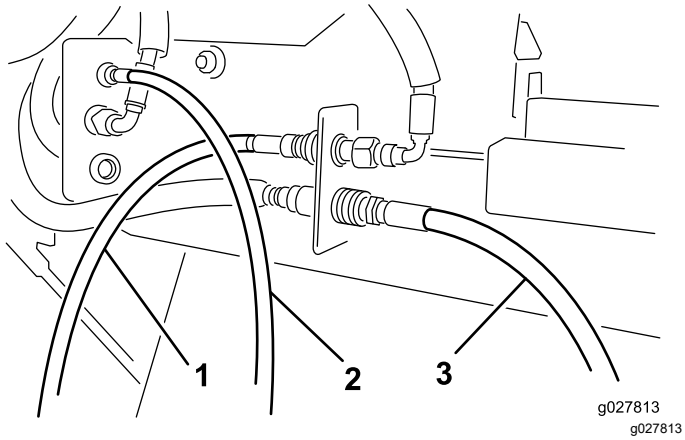

Figure 5

1. Motor hose—front
2. Motor hose—center
3. Motor hose—rear

Note: If the deck is not level when it is raised off the ground, reposition the lift chain in another mounting hole in the bracket.

Product Overview

Specifications

Width	193 to 203 cm (76 to 80 inches)
Operating Width	183 cm (72 inches)
Height	40.6 to 61 cm (16 to 24 inches)
Weight	117 to 140 Kg (258 to 308 lb)

Attachments/Accessories

A selection of Toro approved attachments and accessories is available for use with the machine to enhance and expand its capabilities. Contact your Authorized Service Dealer or authorized Toro distributor or go to www.Toro.com for a list of all approved attachments and accessories.

To ensure optimum performance and continued safety certification of the machine, use only genuine Toro replacement parts and accessories. Replacement parts and accessories made by other manufacturers could be dangerous, and such use could void the product warranty.

Operation

Note: Determine the left and right sides of the machine from the normal operating position.

Before Operation

Before Operation Safety

General Safety

- Never allow children or untrained people to operate or service the machine. Local regulations may restrict the age of the operator. The owner is responsible for training all operators and mechanics.
- Become familiar with the safe operation of the equipment, operator controls, and safety signs.
- Know how to stop the machine and shut off the engine quickly.
- Do not operate the machine without all guards and other safety protective devices in place and functioning properly on the machine.
- Ensure that all hydraulic line connectors are tight, and all hydraulic hoses and lines are in good condition before applying pressure to the system.
- Before operating, always inspect the machine to ensure that it is in good working condition. Replace worn or damaged parts.
- Inspect the area where you will use the machine and remove all objects that the machine could strike.
- Ensure that your traction unit is suitable for use with an implement of this weight by checking with your traction unit supplier or manufacturer.
- Lightning can cause severe injury or death. If lightning is seen or thunder is heard in the area, do not operate the machine; seek shelter.
- Wearing safety glasses, safety shoes, and a helmet is advisable and required by some local ordinances and insurance regulations.

Checking the Tire Pressure

Service Interval: Before each use or daily

The correct tire pressure for the castor wheels is 30 psi (248 kPa).

Adjusting the Operating Height

1. Remove the clevis pin from the spindle shaft (Figure 6).

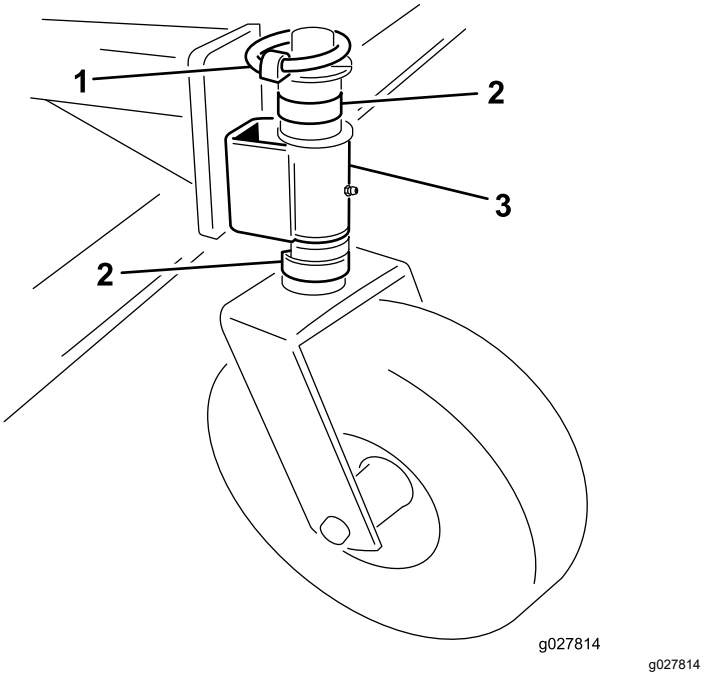

Figure 6

1. Clevis pin
2. Spacer
3. Castor arm

2. Remove or add C-shaped spacers to the spindle shaft, below the castor arm, to get the desired height.
3. Place all remaining spacers on the spindle shaft above the caster arm.
4. Install the clevis pin to secure the assembly.
5. Ensure that all 4 castor wheels are set at the same height.

During Operation

During Operation Safety

General Safety

- The owner/operator can prevent and is responsible for accidents that may cause personal injury or property damage.
- Wear appropriate clothing, including eye protection; slip-resistant, substantial footwear; long pants; and hearing protection. Tie back long hair and do not wear loose clothing or loose jewelry.
- Use your full attention while operating the machine. Do not engage in any activity that causes distractions; otherwise, injury or property damage may occur.
- Do not operate the machine when tired, ill, or under the influence of alcohol or drugs.
- Do not carry passengers on the machine and keep bystanders and pets away from the machine during operation.
- Always disengage the PTO, shut off the engine of the traction unit, remove the key, wait for all moving parts to stop, and allow the machine to cool before leaving the operator's position.
- Watch out for traffic when near or crossing roads. Always yield the right-of-way.
- Do not step over the PTO shaft to get to the other side of the machine. Walk around the machine.
- Always stand to the extreme right or left side of the machine when opening the rear door.
- Operate the machine only in good visibility to avoid holes or hidden hazards.
- Look behind and down before backing up to be sure of a clear path.
- Stop the machine, shut off the engine, wait for all moving parts to stop, and inspect the machine after striking an object or if there is an abnormal vibration in the machine. Make all necessary repairs before resuming operation.
- Always maintain proper traction unit tire pressure.
- Ensure that you comply with all regulations before transporting equipment on the public roads and highways. Make sure that all required reflectors and lights are in place and are clean and visible by overtaking and oncoming traffic.
- Reduce speed on rough roads and surfaces
- For all PTO shaft steel parts (tubes, bearings, joints, etc.) disassembly or repairs, it is highly advisable to contact your authorized Toro distributor. Removal of components for repairs and reassembly may damage some parts if not performed with special tools by trained technicians.
- Do not use the PTO shaft without the guards supplied.

Slope Safety

- Review the tow vehicle specifications to ensure that you do not exceed its slope capabilities.
- Slopes are a major factor related to loss of control and rollover accidents, which can result in severe injury or death. You are responsible for safe slope operation. Operating the machine on any slope requires extra caution.
- Evaluate the site conditions to determine if the slope is safe for machine operation including surveying the site. Always use common sense and good judgment when performing this survey.
- Review the slope instructions listed below for operating the machine on slopes and review the conditions to determine whether you can operate the machine in the conditions on that day and at that site. Changes in the terrain can result in a change in slope operation for the machine.
- Avoid starting, stopping, or turning the machine on slopes. Avoid making sudden changes in speed or direction. Make turns slowly and gradually.
- Do not operate a machine under any conditions where traction, steering, or stability is in question.
- Remove or mark obstructions such as ditches, holes, ruts, bumps, rocks, or other hidden hazards. Tall grass can hide obstructions. Uneven terrain could overturn the machine.
- Be aware that operating the machine on wet grass, across slopes, or downhill may cause the machine to lose traction. Loss of traction to the drive wheels may result in sliding and a loss of braking and steering.
- Use extreme caution when operating the machine near drop offs, ditches, embankments, water hazards, or other hazards. The machine could suddenly roll over if a wheel goes over the edge or the edge caves in. Establish a safety area between the machine and any hazard.

Operating Tips

For complete operating instructions, refer to the *Operator's Manual* that came with the Versa Vac.

- Before starting to sweep, survey the area to determine the best direction to sweep.
- To maintain a straight line when sweeping, sight off of an object in the foreground.
- Always try to make a long, continuous run with a slight overlap on the return run.
- On turf areas, the deck will pick up twigs, clippings, leaves, pine needles, pine cones, and small debris.

Important: **Do not make sharp turns when using the machine as damage to turf may occur.**

Important: **Do not operate the machine while the rotor is turning and in the raised position.**

After Operation

After Operation Safety

General Safety

- Keep all parts of the machine in good working condition and all hardware tightened.
- Replace all worn, damaged, or missing decals.

Cleaning the Machine

Service Interval: After each use

After each use, thoroughly clean and wash the machine. After cleaning, inspected the machine for possible damage to mechanical components.

Maintenance

Recommended Maintenance Schedule(s)

Maintenance Service Interval	Maintenance Procedure
After the first 20 hours	• Check and adjust the drive belt.
Before each use or daily	• Check the tire pressure.
After each use	• Clean the machine. • Grease the machine.

Maintenance Safety

- Before you leave the operator's position, do the following:
  - Park the machine on a level surface.
  - Disengage the PTO.
  - Ensure that the traction unit is in neutral.
  - Engage the traction unit parking brake.
  - Shut off the engine of the traction unit and remove the key (if equipped).
  - Wait for all movement to stop.
- Allow the machine components to cool before performing maintenance.
- Perform only those maintenance instructions described in this manual. If major repairs are ever needed or assistance is desired, contact an authorized Toro distributor.
- Ensure that the machine is in safe operating condition by keeping hardware tightened.
- If possible, do not perform maintenance while the traction unit engine is running. Keep away from moving parts.
- Do not check or adjust the belt tension when the traction unit engine is running.
- Carefully release pressure from components with stored energy.
- Support the machine with blocks when working beneath it. Do not rely on a hydraulic system to support the machine.
- Check the roll pins daily to ensure that they secure the mounting pin to the rotor.
- Ensure that all guards are installed after maintaining or adjusting the machine.
- Seek immediate medical attention if fluid is injected into skin. Injected fluid must be surgically removed within a few hours by a doctor.
- Ensure that all hydraulic-fluid hoses and lines are in good condition and all hydraulic connections and fittings are tight before applying pressure to the hydraulic system.
- Keep your body and hands away from pinhole leaks or nozzles that eject high-pressure hydraulic fluid.
- Use cardboard or paper to find hydraulic leaks.
- Before disconnecting or performing any work on the hydraulic system, lower the implement to the ground and shut off the engine to relieve all pressure in the system.
- To ensure safe, optimal performance of the machine, use only genuine Toro replacement parts. Replacement parts made by other manufacturers could be dangerous, and such use could void the product warranty.

Greasing the Machine

Service Interval: After each use

The deck has 10 grease fittings that must be lubricated regularly with No. 2 General Purpose Lithium Base Grease.

The grease fitting locations and quantities are as follows:

- Caster wheel (2 each) (Figure 7)
- Finger rotor bearings (2) (Figure 8)

Important: **Lubricating the machine immediately after washing helps purge water out of the bearings and increases bearing life.**

1. Wipe each grease fitting with a clean rag.
2. Apply grease until clean grease is seen coming out of the bearing seals.
3. Wipe excess grease away.

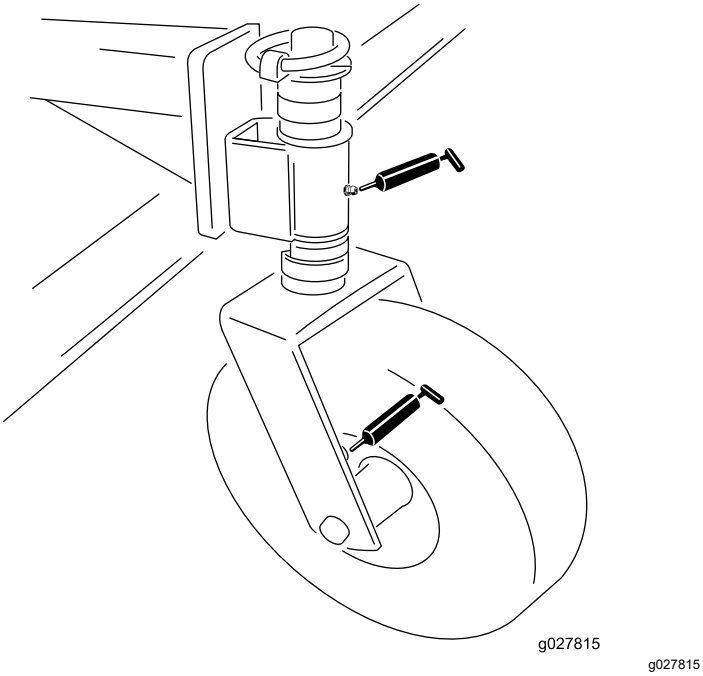

g027815

Figure 7

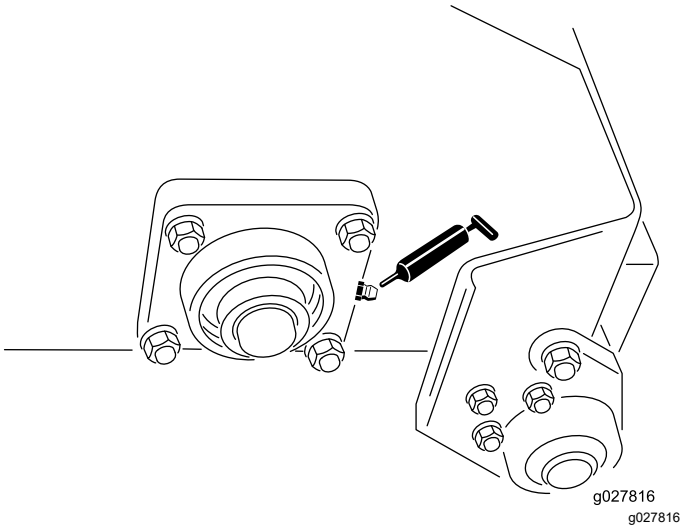

g027816

Figure 8

Adjusting the Drive Belt

Service Interval: After the first 20 hours—Check and adjust the drive belt.

Ensure that the belt is properly tensioned to ensure proper operation of the machine and unnecessary wear. If the belt squeals or slips, tighten it as follows:

1. Remove the fasteners securing the motor shield to the deck frame (Figure 9). Remove the shield.

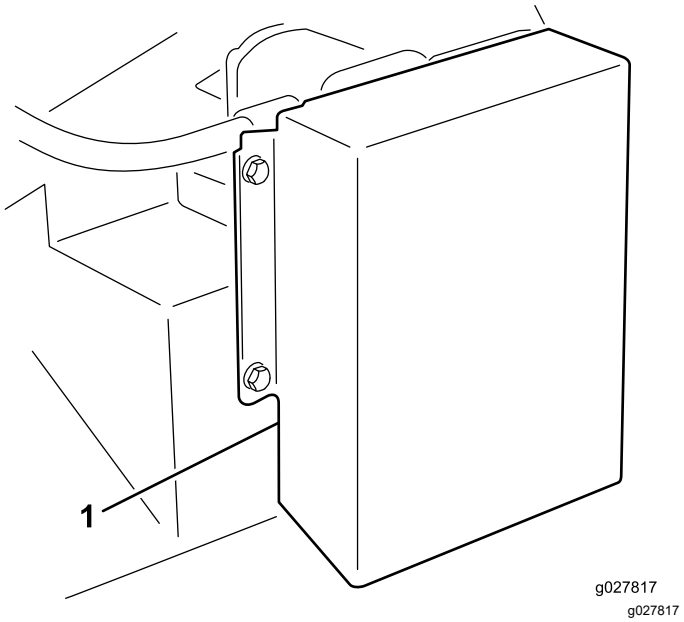

g027817

Figure 9

1. Drive shield

2. On back side of the frame, loosen the bolt securing the belt tensioner to the frame (Fig. 9).

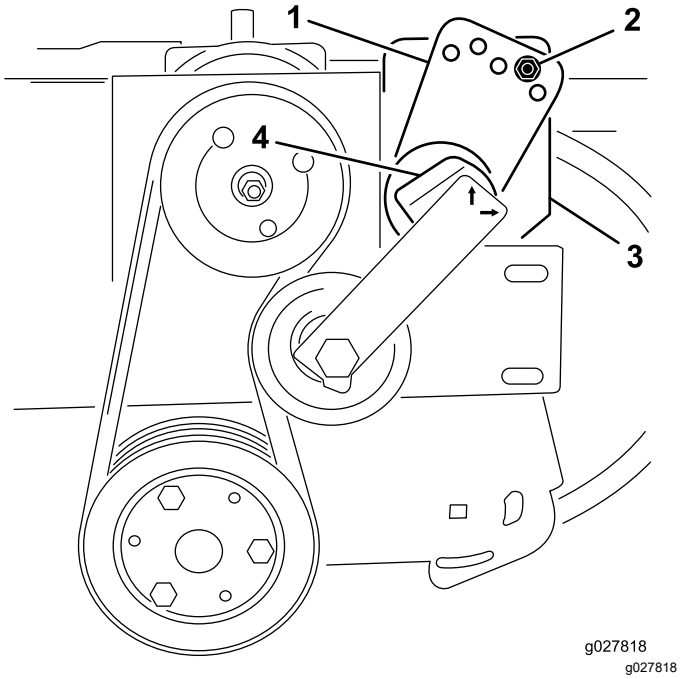

Figure 10

1. Tensioner guide
2. Bolt and nut
3. Bolt (back of frame)
4. Tensioner

3. Remove the bolt and nut securing the tensioner guide to the drive mount (Fig. 9). Belt tension will be released when the bolt is removed.
4. Position a large wrench on the tensioner. Rotate the tensioner clockwise until the decal is aligned with 15 on the tensioner tube.
5. Insert the bolt into the aligned guide holes and secure it with the nut. If holes are not exactly aligned, rotate the guide to the next higher hole until aligned.
6. Tighten the bolt on the back side of the frame to lock the tensioner.
7. Install the motor shield.

Replacing the Finger Belts

1. Loosen the nuts and washers securing the finger pinchers to rotor (Figure 11 and Figure 12).
2. Remove the old belt fingers.
3. Install new belt fingers (Figure 11 and Figure 12). Belt fingers extend from finger pinchers approximately 10 cm (4 inches).
4. Tighten the nuts securing the fingers.

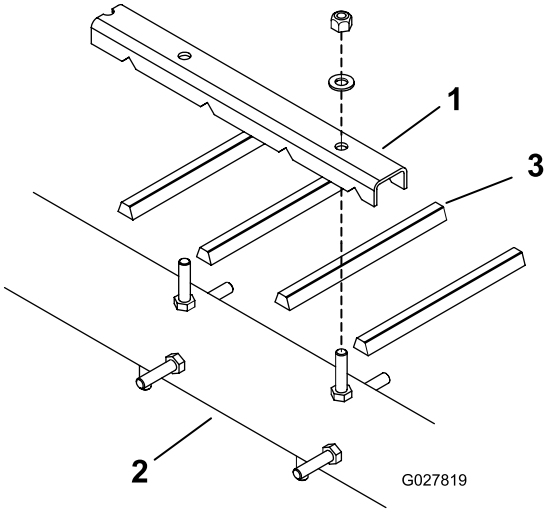

Figure 11

1. Finger pincher
2. Rotor
3. Belt finger

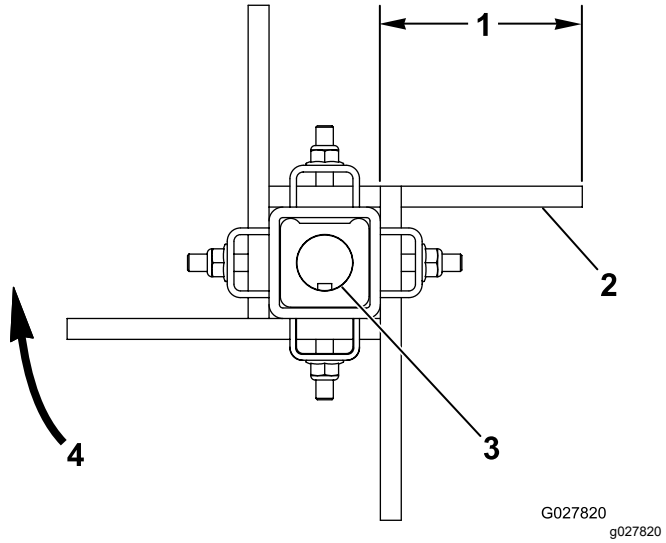

Figure 12

1. Approximately 10 cm (4 inches)
2. Flat side of the belt
3. Keyed shaft
4. Brush rotation

Declaration of Incorporation

The Toro Company, 8111 Lyndale Avenue South, Bloomington, MN, USA declares that the following unit(s) conform(s) to the directives listed, when installed in accordance with the accompanying instructions onto certain Toro models as indicated on the relevant Declarations of Conformity.

Model No.	Serial No.	Product Description	Invoice Description	General Description	Directive
07081	403265001 and Up	Finger Deck	RUBBER FINGER DECK	Vacuum Deck Attachment	2006/42/EC

Relevant technical documentation has been compiled as required per Part B of Annex VII of 2006/42/EC.

We will undertake to transmit, in response to requests by national authorities, relevant information on this partly completed machinery. The method of transmission shall be electronic transmittal.

This machinery shall not be put into service until incorporated into approved Toro models as indicated on the associated Declaration of Conformity and in accordance with all instructions, whereby it can be declared in conformity with all relevant Directives.

Certified:



Tom Langworthy
Engineering Director
8111 Lyndale Ave. South
Bloomington, MN 55420, USA
November 25, 2022

Authorized Representative:

Marcel Dutrieux
Manager European Product Integrity
Toro Europe NV
Nijverheidsstraat 5
2260 Oevel
Belgium

UK Declaration of Incorporation

The Toro Company, 8111 Lyndale Avenue South, Bloomington, MN, USA declares that the following unit(s) conform(s) to the regulations listed, when installed in accordance with the accompanying instructions onto certain Toro models as indicated on the relevant Declarations of Conformity.

Model No.	Serial No.	Product Description	Invoice Description	General Description	Regulation
07081	403265001 and Up	Finger Deck	RUBBER FINGER DECK	Vacuum Deck Attachment	S.I. 2008 No. 1597

Relevant technical documentation has been compiled as required per Schedule 10 of S.I. 2008 No. 1597.

We will undertake to transmit, in response to requests by national authorities, relevant information on this partly completed machinery. The method of transmission shall be electronic transmittal.

This machinery shall not be put into service until incorporated into approved Toro models as indicated on the associated Declaration of Conformity and in accordance with all instructions, whereby it can be declared in conformity with all relevant Regulations.

This declaration has been issued under the sole responsibility of the manufacturer.
The object of the declaration is in conformity with relevant UK legislation.



Tom Langworthy
Engineering Director
8111 Lyndale Ave. South
Bloomington, MN 55420, USA
November 25, 2022

Authorized Representative:

Marcel Dutrieux
Manager European Product Integrity
Toro U.K. Limited
Spellbrook Lane West
Bishop's Stortford
CM23 4BU
United Kingdom

EEA/UK Privacy Notice

Toro's Use of Your Personal Information

The Toro Company ("Toro") respects your privacy. When you purchase our products, we may collect certain personal information about you, either directly from you or through your local Toro company or dealer. Toro uses this information to fulfil contractual obligations - such as to register your warranty, process your warranty claim or to contact you in the event of a product recall - and for legitimate business purposes - such as to gauge customer satisfaction, improve our products or provide you with product information which may be of interest. Toro may share your information with our subsidiaries, affiliates, dealers or other business partners in connection these activities. We may also disclose personal information when required by law or in connection with the sale, purchase or merger of a business. We will never sell your personal information to any other company for marketing purposes.

Retention of your Personal Information

Toro will keep your personal information as long as it is relevant for the above purposes and in accordance with legal requirements. For more information about applicable retention periods please contact legal@toro.com.

Toro's Commitment to Security

Your personal information may be processed in the US or another country which may have less strict data protection laws than your country of residence. Whenever we transfer your information outside of your country of residence, we will take legally required steps to ensure that appropriate safeguards are in place to protect your information and to make sure it is treated securely.

Access and Correction

You may have the right to correct or review your personal data, or object to or restrict the processing of your data. To do so, please contact us by email at legal@toro.com. If you have concerns about the way in which Toro has handled your information, we encourage you to raise this directly with us. Please note that European residents have the right to complain to your Data Protection Authority.

California Proposition 65 Warning Information

What is this warning?

You may see a product for sale that has a warning label like the following:



WARNING: Cancer and Reproductive Harm—www.p65Warnings.ca.gov.

What is Prop 65?

Prop 65 applies to any company operating in California, selling products in California, or manufacturing products that may be sold in or brought into California. It mandates that the Governor of California maintain and publish a list of chemicals known to cause cancer, birth defects, and/or other reproductive harm. The list, which is updated annually, includes hundreds of chemicals found in many everyday items. The purpose of Prop 65 is to inform the public about exposure to these chemicals.

Prop 65 does not ban the sale of products containing these chemicals but instead requires warnings on any product, product packaging, or literature with the product. Moreover, a Prop 65 warning does not mean that a product is in violation of any product safety standards or requirements. In fact, the California government has clarified that a Prop 65 warning "is not the same as a regulatory decision that a product is 'safe' or 'unsafe.'" Many of these chemicals have been used in everyday products for years without documented harm. For more information, go to https://oag.ca.gov/prop65/faqs-view-all.

A Prop 65 warning means that a company has either (1) evaluated the exposure and has concluded that it exceeds the "no significant risk level"; or (2) has chosen to provide a warning based on its understanding about the presence of a listed chemical without attempting to evaluate the exposure.

Does this law apply everywhere?

Prop 65 warnings are required under California law only. These warnings are seen throughout California in a wide range of settings, including but not limited to restaurants, grocery stores, hotels, schools, and hospitals, and on a wide variety of products. Additionally, some online and mail order retailers provide Prop 65 warnings on their websites or in catalogs.

How do the California warnings compare to federal limits?

Prop 65 standards are often more stringent than federal and international standards. There are various substances that require a Prop 65 warning at levels that are far lower than federal action limits. For example, the Prop 65 standard for warnings for lead is 0.5 µg/day, which is well below the federal and international standards.

Why don't all similar products carry the warning?

- Products sold in California require Prop 65 labelling while similar products sold elsewhere do not.
- A company involved in a Prop 65 lawsuit reaching a settlement may be required to use Prop 65 warnings for its products, but other companies making similar products may have no such requirement.
- The enforcement of Prop 65 is inconsistent.
- Companies may elect not to provide warnings because they conclude that they are not required to do so under Prop 65; a lack of warnings for a product does not mean that the product is free of listed chemicals at similar levels.

Why does Toro include this warning?

Toro has chosen to provide consumers with as much information as possible so that they can make informed decisions about the products they buy and use. Toro provides warnings in certain cases based on its knowledge of the presence of one or more listed chemicals without evaluating the level of exposure, as not all the listed chemicals provide exposure limit requirements. While the exposure from Toro products may be negligible or well within the "no significant risk" range, out of an abundance of caution, Toro has elected to provide the Prop 65 warnings. Moreover, if Toro does not provide these warnings, it could be sued by the State of California or by private parties seeking to enforce Prop 65 and subject to substantial penalties.

The Toro Warranty

Two-Year or 1,500 Hours Limited Warranty

Conditions and Products Covered

The Toro Company warrants your Toro Commercial product (“Product”) to be free from defects in materials or workmanship for 2 years or 1,500 operational hours*, whichever occurs first. This warranty is applicable to all products with the exception of Aerators (refer to separate warranty statements for these products). Where a warrantable condition exists, we will repair the Product at no cost to you including diagnostics, labor, parts, and transportation. This warranty begins on the date the Product is delivered to the original retail purchaser.
* Product equipped with an hour meter.

Instructions for Obtaining Warranty Service

You are responsible for notifying the Commercial Products Distributor or Authorized Commercial Products Dealer from whom you purchased the Product as soon as you believe a warrantable condition exists. If you need help locating a Commercial Products Distributor or Authorized Dealer, or if you have questions regarding your warranty rights or responsibilities, you may contact us at:

Toro Commercial Products Service Department
8111 Lyndale Avenue South
Bloomington, MN 55420-1196

952–888–8801 or 800–952–2740
E-mail: commercial.warranty@toro.com

Owner Responsibilities

As the product owner, you are responsible for required maintenance and adjustments stated in your *Operator's Manual*. Repairs for product issues caused by failure to perform required maintenance and adjustments are not covered under this warranty.

Items and Conditions Not Covered

Not all product failures or malfunctions that occur during the warranty period are defects in materials or workmanship. This warranty does not cover the following:

- Product failures which result from the use of non-Toro replacement parts, or from installation and use of add-on, or modified non-Toro branded accessories and products.
- Product failures which result from failure to perform recommended maintenance and/or adjustments.
- Product failures which result from operating the Product in an abusive, negligent, or reckless manner.
- Parts consumed through use that are not defective. Examples of parts which are consumed, or used up, during normal Product operation include, but are not limited to, brake pads and linings, clutch linings, blades, reels, rollers and bearings (sealed or greasable), bed knives, spark plugs, castor wheels and bearings, tires, filters, belts, and certain sprayer components such as diaphragms, nozzles, flow meters, and check valves.
- Failures caused by outside influence, including, but not limited to, weather, storage practices, contamination, use of unapproved fuels, coolants, lubricants, additives, fertilizers, water, or chemicals.
- Failure or performance issues due to the use of fuels (e.g. gasoline, diesel, or biodiesel) that do not conform to their respective industry standards.
- Normal noise, vibration, wear and tear, and deterioration. Normal “wear and tear” includes, but is not limited to, damage to seats due to wear or abrasion, worn painted surfaces, scratched decals or windows.

Parts

Parts scheduled for replacement as required maintenance are warranted for the period of time up to the scheduled replacement time for that part. Parts replaced under this warranty are covered for the duration of the original product warranty and become the property of Toro. Toro will make the final decision whether to repair any existing part or assembly or replace it. Toro may use remanufactured parts for warranty repairs.

Deep Cycle and Lithium-Ion Battery Warranty

Deep cycle and Lithium-Ion batteries have a specified total number of kilowatt-hours they can deliver during their lifetime. Operating, recharging, and maintenance techniques can extend or reduce total battery life. As the batteries in this product are consumed, the amount of useful work between charging intervals will slowly decrease until the battery is completely worn out. Replacement of worn out batteries, due to normal consumption, is the responsibility of the product owner. Note: (Lithium-Ion battery only): Refer to the battery warranty for additional information.

Lifetime Crankshaft Warranty (ProStripe 02657 Model Only)

The Prostripe which is fitted with a genuine Toro Friction Disc and Crank-Safe Blade Brake Clutch (integrated Blade Brake Clutch (BBC) + Friction Disc assembly) as original equipment and used by the original purchaser in accordance with recommended operating and maintenance procedures, are covered by a Lifetime Warranty against engine crankshaft bending. Machines fitted with friction washers, Blade Brake Clutch (BBC) units and other such devices are not covered by the Lifetime Crankshaft Warranty.

Maintenance is at Owner’s Expense

Engine tune-up, lubrication, cleaning and polishing, replacement of filters, coolant, and completing recommended maintenance are some of the normal services Toro products require that are at the owner’s expense.

General Conditions

Repair by an Authorized Toro Distributor or Dealer is your sole remedy under this warranty.

The Toro Company is not liable for indirect, incidental or consequential damages in connection with the use of the Toro Products covered by this warranty, including any cost or expense of providing substitute equipment or service during reasonable periods of malfunction or non-use pending completion of repairs under this warranty. Except for the Emissions warranty referenced below, if applicable, there is no other express warranty. All implied warranties of merchantability and fitness for use are limited to the duration of this express warranty.

Some states do not allow exclusions of incidental or consequential damages, or limitations on how long an implied warranty lasts, so the above exclusions and limitations may not apply to you. This warranty gives you specific legal rights, and you may also have other rights which vary from state to state.

Note Regarding Emissions Warranty

The Emissions Control System on your Product may be covered by a separate warranty meeting requirements established by the U.S. Environmental Protection Agency (EPA) and/or the California Air Resources Board (CARB). The hour limitations set forth above do not apply to the Emissions Control System Warranty. Refer to the Engine Emission Control Warranty Statement supplied with your product or contained in the engine manufacturer’s documentation.

Countries Other than the United States or Canada

Customers who have purchased Toro products exported from the United States or Canada should contact their Toro Distributor (Dealer) to obtain guarantee policies for your country, province, or state. If for any reason you are dissatisfied with your Distributor's service or have difficulty obtaining guarantee information, contact your Authorized Toro Service Center.