Form No. 3326–983 Rev. A

5, 7 and 11 Blade Reels

for Reelmaster® 5500 & 6000 Series

03860—220000792 & Up
03861—220000792 & Up
03862—220000792 & Up

Operator’s Manual

Contents

	Page
Safety	3
Safe Operating Practices	3
Safety and Instruction Decals	3
Specifications	4
Set–Up	5
Loose Parts	5
Inspection	5
Adjusting Front Shield	5
Adjusting Rear Shield	5
Setting Height-of-Cut	6
A. Adjusting (Parallel) Bedknife to Reel	6
B. Setting Cutting Unit Attitude	7
C. Leveling Front Roller	11
D. Finalizing Height-of-Cut	12
E. Adjusting Turf Compensation Spring	12
Maintenance	13
Cutting Unit Daily Adjustments	13
Lubrication	13
Reel Bearing Adjustment	13
SPA (Single Point Adjustment) Spring Adjustment	14
Warranty	16

Introduction

Read this manual carefully to learn how to operate and maintain your product properly. The information in this manual can help you and others avoid injury and product damage. Although Toro designs and produces safe products, you are responsible for operating the product properly and safely.

Whenever you need service, genuine Toro parts, or additional information, contact an Authorized Service Dealer or Toro Customer Service and have the model and serial numbers of your product ready. Figure 1 illustrates the location of the model and serial numbers on the product.

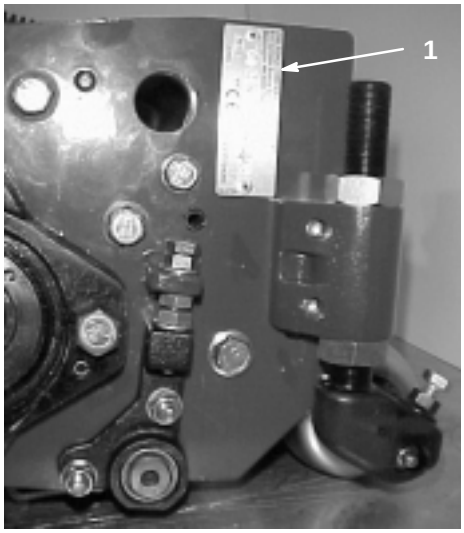

Figure 1

1. Location of the model and serial numbers

Write the product model and serial numbers in the space below:

Model No. _____

Serial No. _____

This manual identifies potential hazards and has special safety messages that help you and others avoid personal injury and even death. ***Danger***, ***Warning***, and ***Caution*** are signal words used to identify the level of hazard. However, regardless of the hazard, be extremely careful.

Danger signals an extreme hazard that *will* cause serious injury or death if you do not follow the recommended precautions.

Warning signals a hazard that *may* cause serious injury or death if you do not follow the recommended precautions.

Caution signals a hazard that may cause minor or moderate injury if you do not follow the recommended precautions.

This manual uses two other words to highlight information. **Important** calls attention to special mechanical information and **Note:** emphasizes general information worthy of special attention.

© 2002 by The Toro Company

8111 Lyndale Avenue South
Bloomington, MN 55420-1196

All Rights Reserved

Printed in the USA

Safety

Safe Operating Practices

- Read, understand, and follow all instructions in the traction unit operator's manual before operating the cutting unit.
- Read, understand, and follow all instructions in this operator's manual before operating the cutting unit.
- Never allow children to operate the cutting units. Do not allow adults to operate traction unit or cutting units without proper instruction. Only trained operators who have read this manual should operate the cutting units.
- Never operate the cutting units when under the influence of drugs or alcohol.
- Keep all shields and safety devices in place. If a shield, safety device or decal is illegible or damaged, repair or replace it before operation is commenced. Also tighten any loose nuts, bolts, and screws to ensure cutting unit is in safe operating condition.
- Always wear substantial shoes. Do not operate cutting unit while wearing sandals, tennis shoes, sneakers or shorts. Also, do not wear loose fitting clothing which could get caught in moving parts. Always wear long pants and substantial shoes. Wearing safety glasses, safety shoes and a helmet is advisable and required by some local ordinances and insurance regulations.
- Remove all debris or other objects that might be picked up and thrown by the cutting unit reel blades. Keep all bystanders away from the mowing area.
- If the cutting blades strike a solid object or the cutting unit vibrates abnormally, stop and shut the engine off. Check cutting unit for damaged parts. Repair any damage before restarting and operating the cutting unit.
- Lower the cutting units to the ground and remove key from ignition switch whenever machine is left unattended.
- Be sure cutting units are in safe operating condition by keeping nuts, bolts and screws tight.
- Remove key from ignition switch to prevent accidental starting of the engine when servicing, adjusting or storing the machine.
- Perform only those maintenance instructions described in this manual. If major repairs are ever needed or assistance is desired, contact an Authorized Toro Distributor.
- To ensure optimum performance and safety, always purchase genuine Toro replacement parts and accessories to keep the Toro all TORO. **Never use "will-fit" replacement parts and accessories made by other manufacturers.** Look for the Toro logo to assure genuineness. Using unapproved replacement parts and accessories could void the warranty of The Toro Company.

Safety and Instruction Decals

Safety decals and instructions are easily visible to the operator and are located near any area of potential danger. Replace any decal that is damaged or lost.



ON FRONT SHIELD OF CUTTING UNIT
(Part No. 67–7960)



ON FRONT SHIELD OF CUTTING UNIT
(Part No. 93–6688 for CE)

1. Read the operator's manual before performing maintenance.
2. Cutting hazard to hands or feet—stop the engine and ensure all moving parts have stopped before placing hands or feet in the reel area.

Specifications

Reel Construction: Fairway reels. All welded. 5, 7 or 11 blades.

Recommended Height Of Cut Range:
5 Blade – 1” to 1-3/4” (25–44 mm)
7 Blade – 1/2” to 1” (13–25 mm)
11 Blade – 3/8” to 3/4” (10–19 mm)

Note: Use bedknife Part No. 93-9774 for heights-of-cut below 1/2” (13 mm).

Reel Diameter: 7 in. (178 mm)

Power Attachment: Reel motors feature quick disconnect for removal or installation onto cutting unit. Cutting units can be driven from either end.

Height–of–cut & Roller Adjustment: Height-of-cut adjustment is made at the rear roller with threaded micro–adjustment. Front roller position is adjustable to set cutting unit attitude.

Bedknife And Bedbar Adjustment: Single point adjustment (SPA) mechanism.

Selected Clip Control: The Reelmaster 5500 Traction Unit is equipped with manually adjustable reel speeds which control selected clip.

Note: Refer to Traction Unit Operator’s Manual for proper set–up procedure.

Automatic Clip Control: The Reelmaster 6000 Series Traction Unit is equipped with an electronic controller which is programmed to achieve automatic clip control. As the traction unit speed varies, the controller will automatically adjust the hydraulic flow to the reel motors to vary reel speed and maintain proper clip. For proper clip, the controller needs to know what cutting units are installed (5, 7 or 11 blade) and the height-of-cut.

Note: Refer to Traction Unit Operator’s Manual for proper set–up procedure.

Rollers: Front roller is a 3” (76 mm) diameter cast Wiehle roller. Rear roller is a 3” (76 mm) diameter steel full roller. Both rollers use heavy duty ball bearings with two conventional single lip seals and a Toro labyrinth seal to provide four sealing surfaces to protect the bearings.

Optional Equipment

Dethatching Cutting Unit	Model No. 03872
Grass Basket Kit	Model No. 03882
Rear Roller Brush Kit	Model No. 03875
High Torque Reel Motor	Part No. 98-9998
Comb/Scraper Kit	Part No. 104–1845
Wiehle Roller Scraper	Part No. 100-9908
Rear Roller Scraper Kit	Part No. 100-9920
RM6000 Shoulder Wiehle Roller	Part No. 99-8675
RM5500 Shoulder Wiehle Roller	Part No. 100-9911
RM6000 Shoulder Wiehle Scraper	Part No. 99-8670
RM5500 Shoulder Wiehle Scraper	Part No. 100-9913
3” Diameter Collar Kit	Part No. 104–8215
Low Height-of-Cut Bedknife*	Part No. 93-9774
Gauge Bar Assembly†	Part No. 98-1852
Angle Indicator	Part No. 99-3503
Backlapping Brush Assembly	Part No. 29–9100
Bedknife Screw Tool	Part No. TOR510880
Cutting Unit Tool Kit	Part No. TOR4070
Reel Drive Tool	Part No. TOR4074

* For height-of-cut below 1/2” (13 mm)

† Supplied with tractor

Assembly

Note: Determine the left and right sides of the machine from the normal operating position.

Loose Parts

Note: Use the chart below to verify all parts have been shipped.

DESCRIPTION	QTY.	USE
Decal	1	Apply over existing decal for CE
Operator's Manual	1	Read before operating machine.
Parts Catalog	1	Use for ordering replacement parts.
Registration Card	1	Fill out and return to Toro.

Inspection

After the cutting unit is unboxed, inspect the following:

1. Check each end of the reel for grease. Grease should be visibly evident in the reel bearings and internal splines of reel shaft.
2. Ensure that all nuts and bolts are securely fastened.
3. Make sure carrier frame suspension operates freely and does not bind when moved back and forth.

Adjusting Front Shield

Adjust front shield for desired grass clippings dispersion.

1. Position cutting unit on a flat level surface.
2. Loosen flange head capscrew securing shield to right side plate. Move shield to desired angle and tighten screw (Fig. 2).

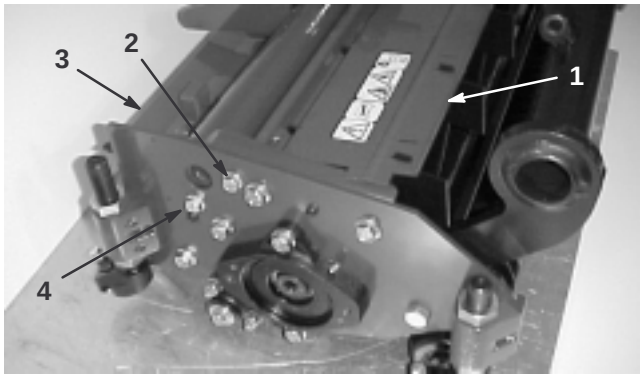

Figure 2

1. Front grass shield
2. Front capscrew
3. Rear grass shield
4. Rear capscrew

Adjusting Rear Shield

Under most conditions, best dispersion is attained when rear shield is closed (front discharge). When conditions are heavy or wet, rear shield may be opened.

1. To open rear shield (Fig. 2), loosen flange head capscrew securing shield to right side plate, rotate shield to open position and tighten capscrew.

Setting Height–of–Cut

Important To insure proper setting of height-of-cut, these procedures must be followed in this order:

A. Adjusting (Parallel) Bedknife To Reel

B. Setting Cutting Unit Attitude

C. Leveling Front Roller

D. Finalizing Height-of-Cut

Important Each cutting unit must be set consistently. Minor differences in either height-of-cut, attitude, bedknife wear, or reel blade wear, among cutting units, may result in negative after cut appearance.

Note: The cutting unit has been set at the factory at 5/8" (16 mm) height-of-cut and with a cutting unit attitude of 2 degrees. Also, the bedknife has been backed off from the reel to prevent shipping damage. Verify setting to ensure changes did not occur during shipment.

A. Adjusting (Parallel) Bedknife to Reel

Important The reel and bedknife must be parallel to insure the cutting unit cuts grass across the bedknife, and the reel and bedknife wear evenly.

Note: Toro recommends light contact between the reel and bedknife. However, for dry and/or sparse conditions a .001–.002" (.03–.05 mm) clearance may be required to prevent heat buildup which can cause uneven wear in the reel and bedknife.

Note: A 3/4 inch (19 mm) wrench is needed to rotate bedknife adjustment knob. Each notch on the knob will move the bedknife 0.0005 inches (.013 mm) closer to the reel (Fig. 3).

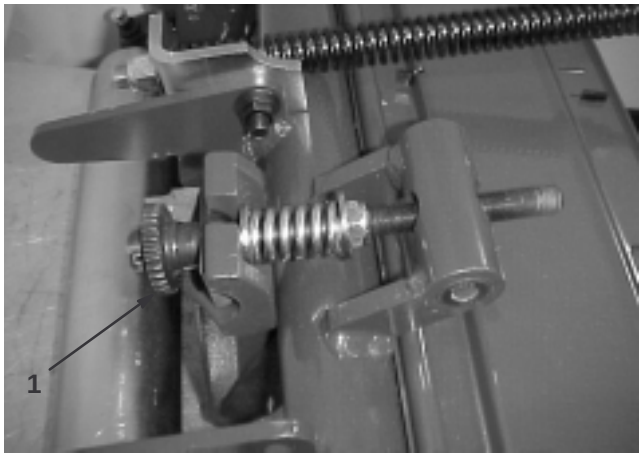

Figure 3

1. Bedknife adjusting knob

1. Rotate cutting unit backward to gain access to reel and bedknife (Fig. 4).

2. While slowly rotating the reel in the mowing direction, turn the bedknife adjusting knob clockwise until you feel light contact between the reel and bedknife.

3. Insert a 1" (25 mm) wide piece of newspaper perpendicular to the bedknife, and then rotate the reel slowly in the mowing direction to see if the reel cuts the paper - do this on both ends of the bedknife (Fig. 4). If the paper does not cut cleanly, tighten the bedknife adjusting knob a maximum of 2 clicks, and check to see if paper is cut cleanly.

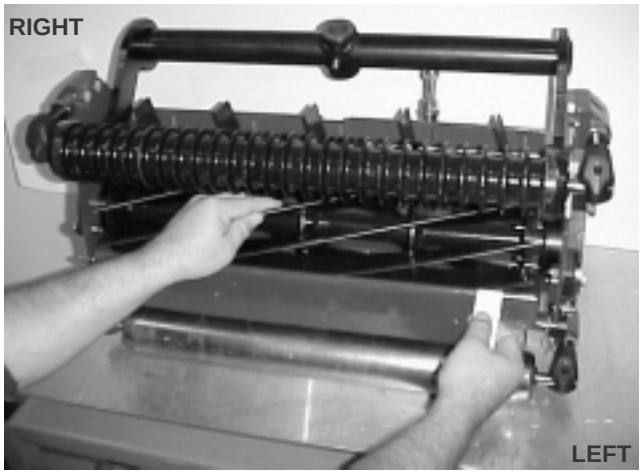

Figure 4

4. If paper is cut on both ends, the bedknife is parallel to the reel. If not proceed to step A.

Note: If reel makes contact on both sides of bedknife but still does not cut paper, cutting unit may need to be backlapped (refer to Backlapping) and/or reel and bedknife may need to be reground (refer to Toro manual for Sharpening Reel and Rotary Mowers, Form No. 80–300PT).

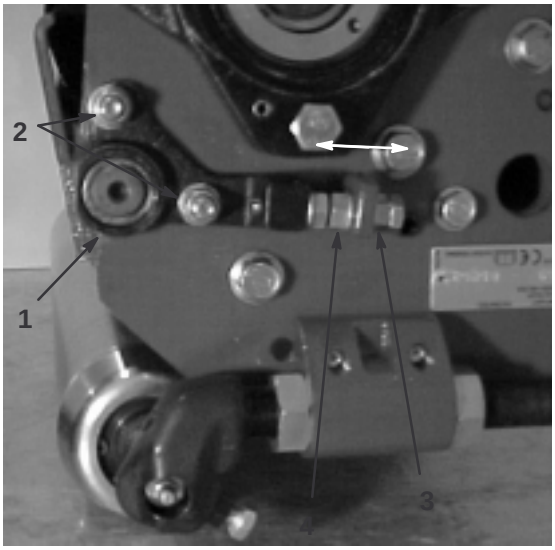

Figure 5

1. Pivot hub casting
2. Pivot hub locknuts
3. Top adjusting nut
4. Bottom adjusting nut

A. Loosen the pivot hub lock nuts to allow movement of the pivot hub casting (Fig. 5).

5. If paper was not cut on the left side: loosen the bottom adjusting nut on the pivot hub, then turn the top adjusting nut clockwise to pull the pivot hub up. **OR** If paper was not cut on the right side: loosen the top adjusting nut on the pivot hub, then turn the bottom adjusting nut counterclockwise to push the pivot hub down (Fig. 5).

Note: To reduce thread play, always tighten the bottom adjusting nut last.

6. Recheck reel to bedknife contact on both ends of the bedknife, and repeat step 5 as necessary.

Note: Reel to bedknife contact may become too tight or too loose after previous adjustment; therefore, turn bedknife adjustment knob, accordingly, for light contact.

7. Retighten pivot hub lock nuts.

Note: Recheck if paper cuts on both ends, to insure the bedknife did not move when re–tightening the pivot hub lock nuts.

B. Setting Cutting Unit Attitude

Important Cutting unit “attitude” has a significant impact on the performance of the cutting unit. Attitude refers to the angle of the bedknife relative to the ground (Fig. 6). Adjustable front and rear brackets allow for variable adjustment of cutting unit attitude within the height-of-cut range. All cutting units on a given machine must be set to the same attitude, otherwise after-cut appearance could be negatively affected.

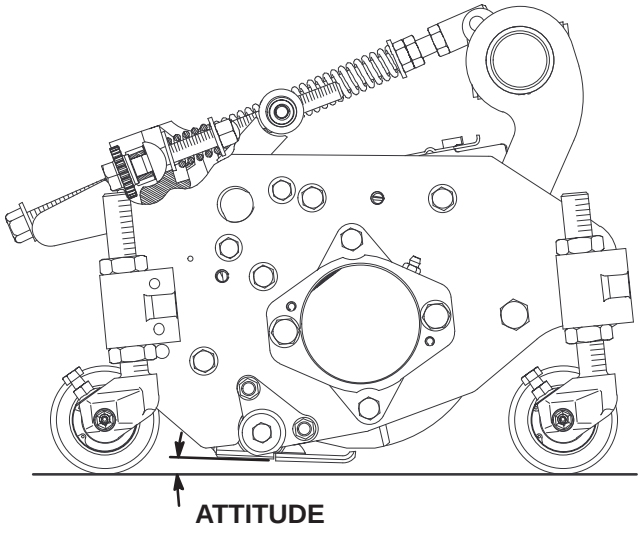

Figure 6

The best cutting unit attitude is dependent on your turf conditions and desired results. Experience with the cutting unit on your turf will determine the best setting to use. Cutting unit attitude can be adjusted throughout the cutting season to allow for various turf conditions.

In general, less aggressive attitudes (example: 2 degrees) are more appropriate for warm season grasses (Bermuda, Zoysia) while cool season grasses (Bent, Bluegrass, Rye) may require more aggressive attitudes (example: 6 degrees). More aggressive attitudes cut more grass off by allowing the spinning reel to pull more grass up into the bedknife. An angle that is too flat (attitude less than 1 degree) may allow the bedbar or other parts of the cutting unit to drag in the turf causing tufting. Therefore, minimum recommended attitude is 1 degree.

For setting consistent cutting unit attitude, Toro strongly recommends using a two-screw gauge bar, Toro part no. 98-1852 (Fig. 7). The first screw is set for height-of-cut, and the second screw is set for cutting unit attitude. The second screw setting is an easy method of transferring cutting unit attitude to all cutting units on a machine.

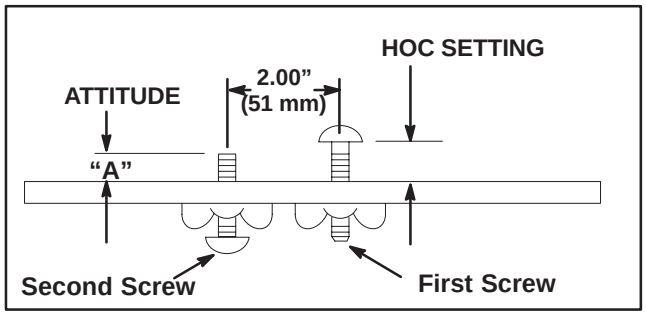

Figure 7

Setting Attitude for New Cutting Units

Table 1 lists approximate starting dimensions for setting up a new cutting unit with attitudes of 2, 4, 6 and 8 degrees.

Note: The second screw setting will change throughout the life of the bedknife and reel due to wear, **even if the height-of-cut is not changed.** Therefore, after initial set up use **Checking and Adjusting Attitude for Used Cutting Unit** procedure.

1. Using a two-screw gauge bar, Toro Part No. 98-1852, set first screw to desired height-of-cut. This setting is from the bar face to the underside of the screw head (Fig. 7).
2. Using **Table 1**, set the attitude, "A," for the second screw on the gauge bar. This setting is from the bar face to the end of the screw (Fig. 7).

   Note: Rotate the cutting unit backward to gain access to reel and bedknife.
3. Set the front height-of-cut rod height,"B," using the dimension given in **Table 1**. This measurement is between the top surface of the height-of-cut rod and top cone nut (Fig. 8).
4. Set the rear support casting in either the top or bottom location as indicated in **Table 1**. Set the rear height-of-cut rod height **.100" (3 mm)** less than the dimension given in **Table 1** which will create a gap between the rear roller and the gauge bar (Fig. 8).

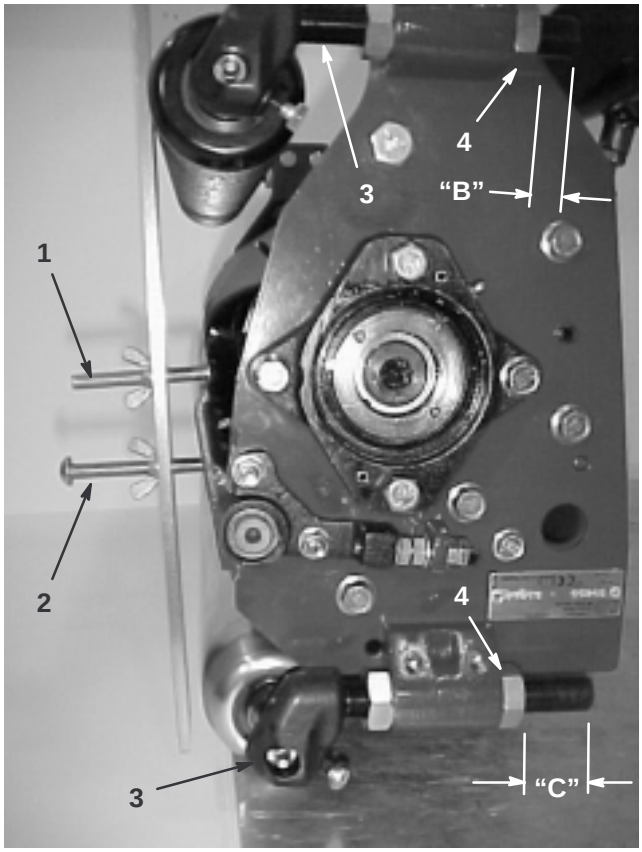

Figure 8

1. First screw
2. Second screw
3. Height-of-cut rod
4. Cone nut

Note: Place gauge bar across front and rear rollers. The first screw head should fit snugly over edge of bedknife and the end of second screw should contact bottom of bedknife (Fig. 8). If there is a gap between the front roller and the gauge bar or you can not put the gauge bar on, adjust the front roller until: (1) first (height-of-cut) screw fits snugly over bedknife, (2) second screw just contacts bedknife, and (3) gauge bar touches front roller. Verify front roller (attitude) at each end of the bedknife.

Note: At this time, there should be a small gap between the rear roller and gauge bar.

Table 1—New Cutting Unit Set Up Guide

Desired Height-of-Cut (HOC)		Desired Attitude	Second Screw "A" (Fig. 7)		Front Height-of-Cut Rod "B" (Fig. 8)		Rear Height-of-Cut Rod "C" (Fig. 8)		Rear Support Bracket (Fig. 8)
(in)	(mm)	(degrees)	(in)	(mm)	(in)	(mm)	(in)	(mm)	(location)
0.375	(10)	2*	0.18	4.6	1.62	41.3	1.86	47.4	top
		4*	0.23	5.9	1.82	46.4	1.62	41.3	top
		6*	–	–	2.02	54.5	1.38	35.2	top
		8*	–	–	–	–	–	–	top
0.500	(13)	2*	0.29	7.6	1.49	38.1	1.74	44.2	top
		4*	0.35	9.0	1.70	43.2	1.50	38.1	top
		6*	0.41	10.5	1.90	48.3	1.26	32.1	top
		8*	–	–	–	–	–	–	top
		2	0.22	5.8	1.36	34.5	1.91	48.5	top
		4	0.28	7.2	1.56	39.6	1.66	42.4	top
		6	0.34	8.7	1.76	39.6	1.42	26.3	top
		8	–	–	1.96	49.9	1.19	30.3	top
0.625	(16)	2	0.35	9.0	1.23	31.3	1.78	45.3	top
		4	0.41	10.4	1.43	36.4	1.54	29.2	top
		6	0.46	11.9	1.63	41.6	1.30	24.6	top
		8	–	–	1.83	46.7	1.06	27.1	top
0.750	(19)	2	0.47	12.1	1.10	28.2	1.65	42.1	top
		4	0.53	13.6	1.31	33.3	1.41	36.0	top
		6	0.59	15.0	1.51	38.4	1.17	29.9	top
		8	0.65	16.5	1.71	43.5	0.94†	23.9	top
0.875	(22)	2	0.60	15.3	0.98†	25.0	1.53	38.9	top
		4	0.66	16.8	1.18	30.1	1.29	45.5	top
		6	0.71	18.2	1.38	35.2	1.05	26.8	top
		8	0.77	19.7	1.58	40.3	0.81†	20.7	top
1.000	(25)	2	0.72	18.5	0.85†	21.8	1.40	35.7	top
		4	0.78	19.9	1.06	26.9	1.16	29.6	top
		6	0.84	21.4	1.26	32.0	0.92†	23.6	top
		8	0.90	22.9	1.46	37.2	0.69†	17.6	top
1.125	(29)	2	0.85	21.7	0.73†	18.6	1.28	32.6	top
		4	0.91	23.1	0.93†	23.7	1.04	26.5	top
		6	0.96	24.6	1.13	28.9	0.80†	20.4	top
		8	1.02	26.0	1.38	35.3	0.56†	14.4	top
1.250	(32)	2	0.97	24.8	0.60†	15.4	1.15	29.4	top
		4	1.03	26.3	0.80†	20.5	0.91†	23.3	top
		6	1.09	27.7	1.01	25.7	0.67†	17.2	top
		8	1.15	29.2	1.21	30.8	0.44†	11.2	top
1.375	(35)	2	1.10	28.0	0.48†	12.2	1.03	26.2	top
		4	1.16	29.5	0.68†	17.4	0.79†	20.1	top
		6	1.21	30.9	0.88†	22.5	0.55†	14.0	top
		8	1.27	32.4	1.08	27.6	0.31†	8.0	top
1.500	(38)	2	1.22	31.2	0.35†	9.0	0.90†	23.0	top
		4	1.28	32.6	0.55†	14.2	0.66†	16.9	top
		6	1.34	34.1	0.76†	19.3	0.42†	10.9	top
		8	1.40	35.6	0.96†	24.5	0.19†	4.9	top
1.625	(41)	2	–	–	0.22†	5.8	1.40	35.7	bottom
		4	1.41	35.8	0.43†	11.0	1.16	29.6	bottom
		6	1.42	36.2	0.63†	16.2	0.92†	23.6	bottom
		8	1.52	38.7	0.83†	21.3	0.69†	17.6	bottom
1.750	(45)	2	–	–	0.10†	2.6	1.27	32.5	bottom
		4	1.53	39.0	0.30†	7.8	1.04	26.4	bottom
		6	1.59	40.4	0.51†	13.0	0.80†	20.4	bottom
		8	1.65	41.9	0.71†	18.1	0.56†	14.4	bottom

***** Optional Low Cut Bedknife, Toro part no. 93-9774, is required for height-of-cut below 0.500" (13 mm).

† For front ("B") or rear roller distances ("C") less than 1" (25 mm) order long cone nut (Part No. 95-2790) to replace bottom cone nut for improved support.

Note: This guide gives an approximate starting point for new cutting units only.

Checking or Adjusting Attitude for Used Cutting Units

Note: As a starting point for adjusting cutting unit attitude, the cutting unit may be set up using the dimensions from **Table 1.** However, because of wear on the bedknife and reel, the following procedure must be used to ensure the correct attitude setting.

1. Rotate cutting unit backward to gain access to reel and bedknife.
2. Place an angle indicator, Toro Part No. 99–3503, on the bedknife and record the bedknife angle (Fig. 9).

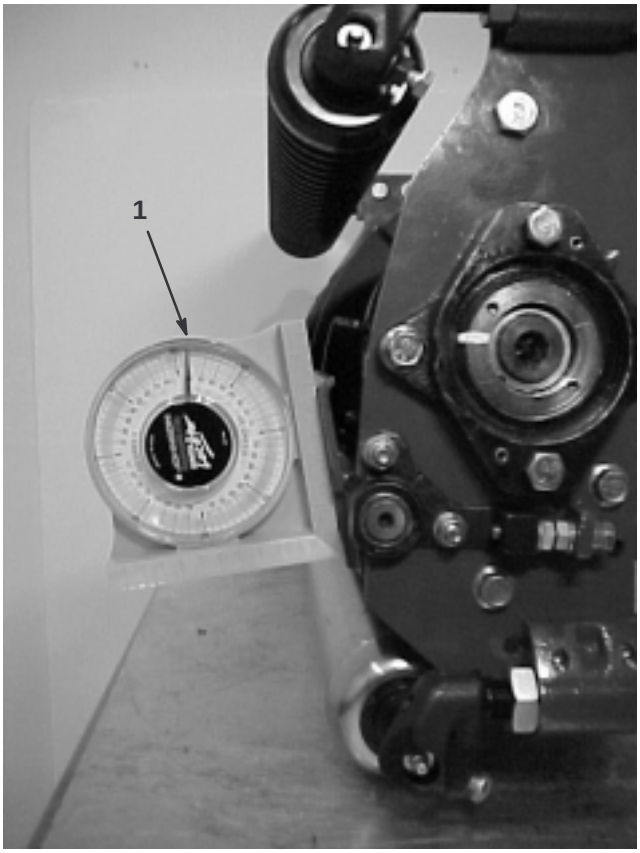

Figure 9

1. Bedknife angle

3. Using a two-screw gauge bar, Toro Part No. 98-1852, set first screw to desired height-of-cut.
4. Place the gauge bar across front and rear rollers. The first screw head needs to fit snugly over edge of the bedknife,while the gauge bar contacts the front roller (Fig. 10).

Note: The rear roller does not have to contact the gauge bar.

5. Adjust second screw to contact bedknife. Move rear roller up, if needed.
6. Place an angle indicator on the gauge bar and record the gauge bar angle (Fig. 10).

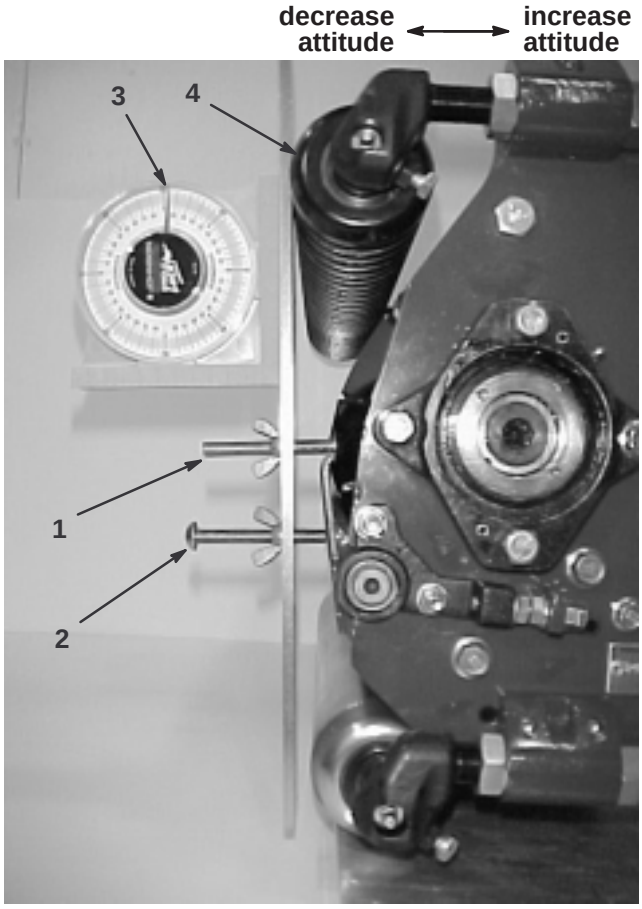

Figure 10

1. First screw
2. Second screw
3. Gauge bar angle
4. Front Roller

7. Adjust the front roller to your desired cutting unit attitude:
   Bedknife Angle (step 2)
   – Gauge Bar Angle (step 6)
   = Cutting Unit Attitude (degrees)

Note: Moving the front roller down will decrease your cutting unit attitude, while moving the front roller up will increase cutting unit attitude (Fig. 10).

C. Leveling Front Roller

Important Toro strongly recommends the use of a leveling plate when setting–up or adjusting any reel type cutting unit. The leveling plate will help to ensure accurate and consistent adjustments. Contact your local Toro Distributor for ordering a leveling plate.

1. Position cutting unit on a flat surface.
2. Position a straight, parallel sided bar under the reel blades and against the front edge of the bedknife (Fig. 11). For 1” (25 mm) height-of-cut or below, a 3/4” (19 mm) bar is recommended. For heights–of–cut above 1” (25 mm), a 1–1/4” (32 mm) bar is recommended.

   Note: The bar thickness does not affect the adjustment. The recommended bars keep the cutting unit more balanced during the adjustment. Make sure the bar covers the full length of the reel blades and the outermost contact points between the reel and bar are equal distances from the center of the reel.

3. Rock cutting unit forward (on reel blades and steel bar) until front roller contacts flat surface. Reel blades and bedknife must maintain contact with bar. Rear roller should not contact surface (Fig. 11).
4. Use a piece of newspaper or visually check to see if any gap exists between front roller ends and flat surface (Fig. 12). **If needed, adjust front height-of-cut rods until both ends of roller are in contact with level surface.**

   Note: If leveling the front roller causes the cutting unit attitude to be different from side to side by more than one degree, you may need to regrind the reel and/or bedknife to eliminate uneven wear.

Contact along full length of reel blade and front roller ends levels front roller to reel.



Figure 11

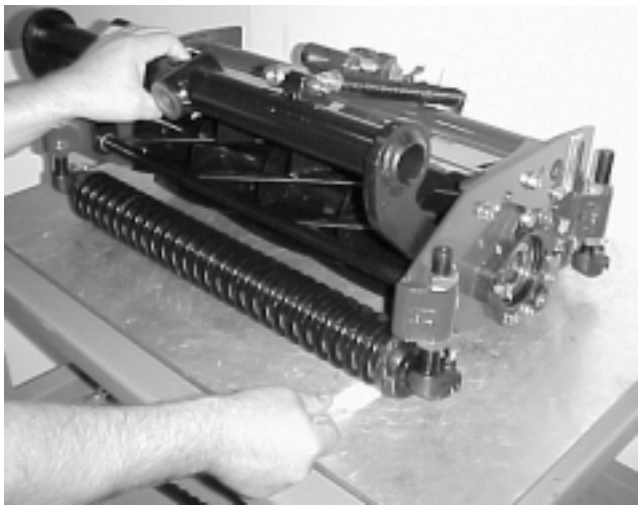

Figure 12

D. Finalizing Height-of-Cut

1. Rotate the cutting unit vertical and place the gauge bar across front and rear rollers (Fig. 13).
2. Adjust rear roller until it contacts the gauge bar on both sides (Fig. 13).

   Note: Make sure gauge bar is in contact with the front roller at all times to keep desired height-of-cut.

3. Slide gauge bar toward the end of the cutting unit to remove. Gauge bar can now be utilized to set remaining cutting units on machine.

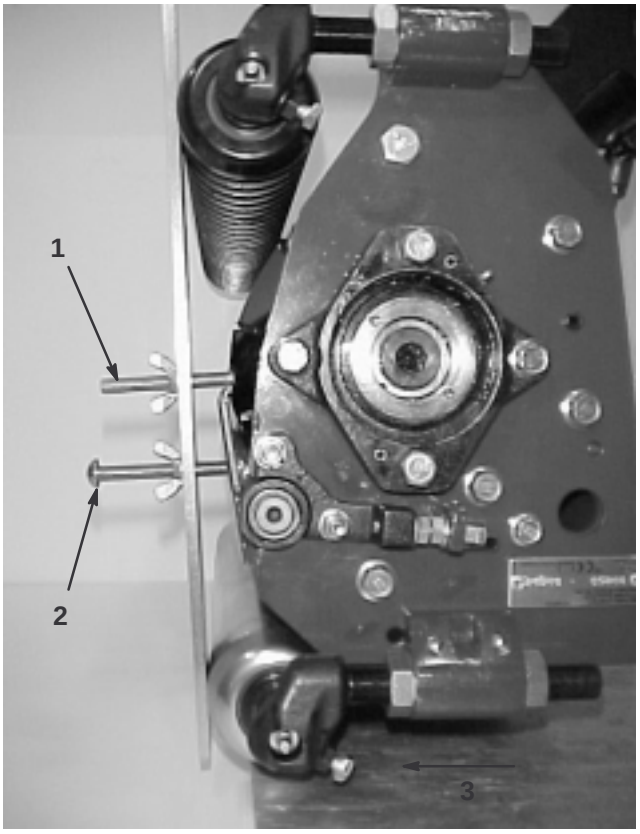

Figure 13

1. First screw
2. Second screw
3. Adjust rear roller

E. Adjusting Turf Compensation Spring

The Turf Compensation Spring (Fig. 14), connecting carrier frame to cutting unit, controls the amount of fore-aft rotation available, as well as the amount of ground clearance in transport and turn around.

The Turf Compensation Spring also transfers weight from the front to rear roller. This helps to reduce a wave pattern in the turf, also known as bobbing.

Important Make spring adjustments with cutting unit mounted to traction unit and lowered to shop floor. Refer to Traction Unit Operator's Manual for mounting instructions.

1. Tighten lock nut on rear of spring rod until the gap (C) between rear of spring bracket and front of washer is 1" (26 mm) (Fig. 14).
2. Tighten hex nuts on front end of spring rod until the compressed length (A) of spring is 8" (203 mm) (Fig. 14).

   Note: When cutting rough or undulating turf, increase compressed length (A) of spring to 8-1/2" (216 mm) and gap (C) between rear of spring bracket and front of washer to 1-1/2" (39 mm) (Fig. 14).

   Note: As compressed spring length (A) **decreases**, weight transfer from front roller to rear roller **increases** and carrier frame/cutting unit rotation angle (B) **decreases**.

   Note: As gap (C) between spring bracket and washer **increases**, cutting unit ground clearance **decreases** and carrier frame/cutting unit rotation angle (B) **increases**.

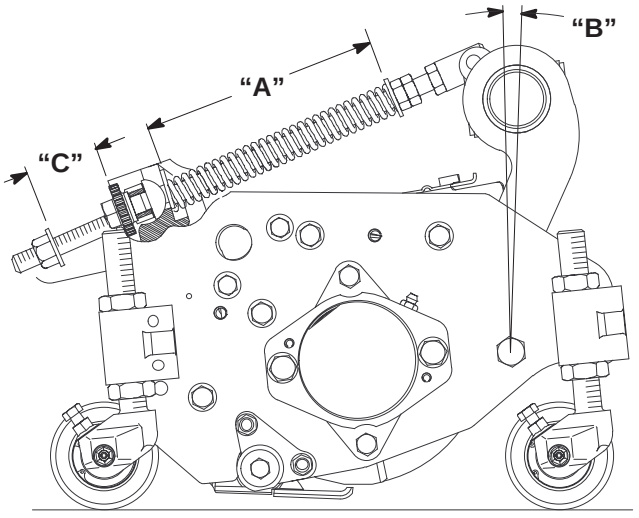

Figure 14

Maintenance

Note: Determine the left and right sides of the machine from the normal operating position.

Cutting Unit Daily Adjustments

Prior to each day's mowing, or as required, each cutting unit must be checked to verify proper bedknife–to–reel contact. **This must be performed even though quality of cut is acceptable.**

1. Lower cutting units onto a hard surface, shut off engine and remove key from ignition.

2. Slowly rotate reel in reverse direction listening for reel–to–bedknife contact. If no contact is evident, turn bedknife adjusting knob clockwise, one click at a time, until light contact is felt and heard.

3. If excessive contact is felt, turn bedknife adjusting knob counterclockwise, one click at a time until no contact is evident. Then turn bedknife adjusting knob one click at a time clockwise, until light contact is felt and heard.

Important Light contact is preferred at all times. If light contact is not maintained, bedknife / reel edges will not sufficiently self–sharpen and dull cutting edges will result after a period of operation. If excessive contact is maintained, bedknife/reel wear will be accelerated, uneven wear can result, and quality of cut may be adversely affected.

Note: As the reel blades continue to run against the bedknife a slight burr will appear on the front cutting edge surface the full length of the bedknife. If a file (or a light face grind) is occasionally run across the front edge to remove this burr, improved cutting edge sharpness can be obtained.

After extended running, a ridge will eventually develop at both ends of the bedknife. These notches must be rounded off or filed flush with cutting edge of bedknife to assure smooth operation.

Lubrication

Each cutting unit has (7) grease fittings (Fig. 15) that must be lubricated regularly with No. 2 General Purpose Lithium Base Grease.

The lubrication points are front roller (2), rear roller (2), reel bearing (2) and bedknife adjuster.

Important Lubricating cutting units immediately after washing helps purge water out of bearings and increases bearing life.

1. Wipe each grease fitting with a clean rag.

2. Apply grease until clean grease is seen coming out of roller seals and bearing relief valve.

3. Wipe excess grease away.

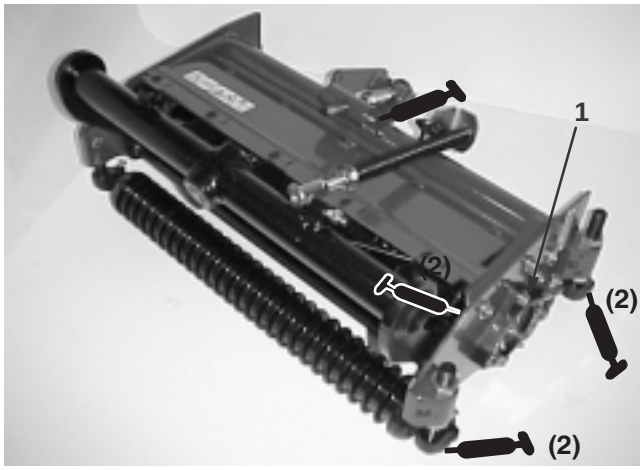

Figure 15

1. Relief valve

Reel Bearing Adjustment

To insure long life of the reel bearings, periodically check if reel end play exits. The reel bearings can be checked and adjusted as follows:

Note: Bearing and bearing housing were preset at factory as indicated with a paint mark.

1. Loosen reel to bedknife contact by turning the bedknife adjusting knob (Fig. 16) counter–clockwise until no contact exists.

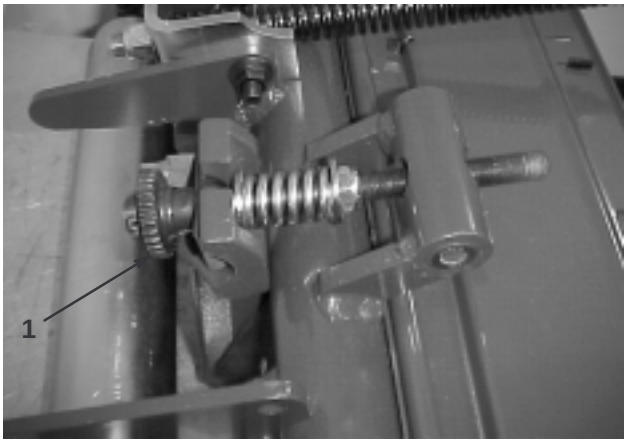

Figure 16

1. Bedknife adjusting knob

2. Hold on to the reel shaft and try to move the reel assembly side to side (Fig. 17).

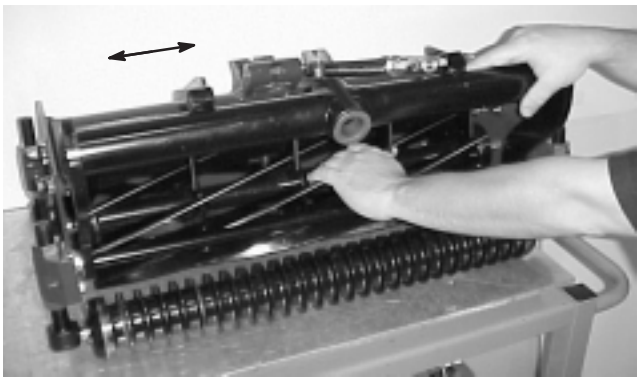

Figure 17

3. If end play exists, proceeded as follows:

A. Loosen external set screw securing bearing adjusting nut to bearing housing located on the left side of the cutting unit (Fig. 18).

B. Using a spanner wrench, slowly tighten the reel bearing adjustment nut until no end play of the reel exists. If adjusting nut does not eliminate reel end play, replace reel bearings.

Note: Reel bearings **do not** require pre–load. Over tightening reel bearing adjuster nut will damage reel bearings.

4. Retighten set screw securing bearing adjusting nut to bearing housing.

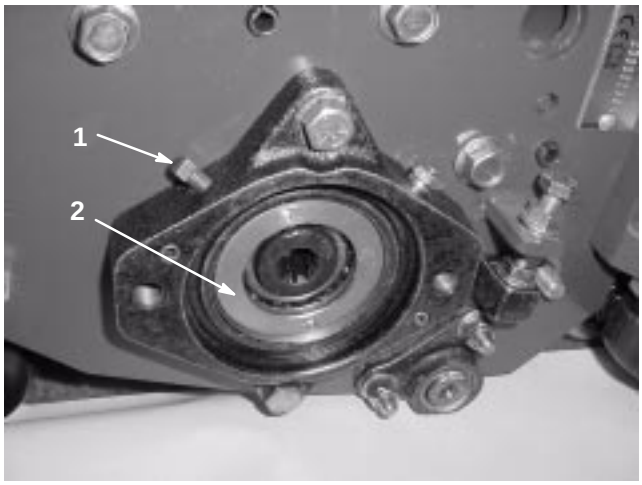

Figure 18

1. Set screw
2. Bearing adjusting nut

SPA (Single Point Adjustment) Spring Adjustment

If single point adjustment assembly (Fig. 19) is removed for servicing, make sure spring is compressed to a length of 1.25” (32 mm). This adjustment is attained by tightening nut on SPA knob shaft.

Note: SPA assembly has left-handed threads.

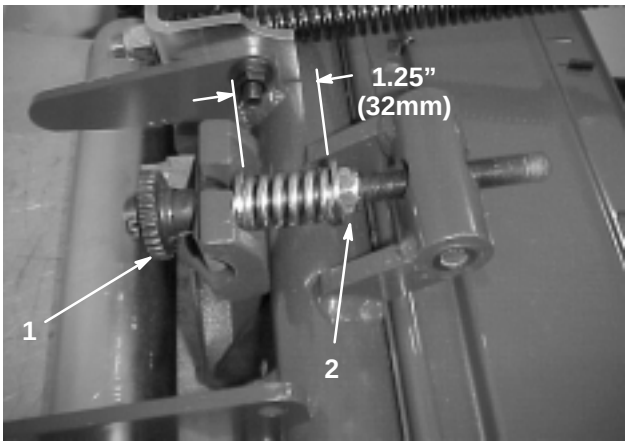

Figure 19

1. Single point adjust assembly
2. Adjusting nut

The Toro General Commercial Products Warranty

A Two-Year Limited Warranty

Conditions and Products Covered

The Toro Company and its affiliate, Toro Warranty Company, pursuant to an agreement between them, jointly warrant your 1996 or newer Toro Commercial Product ("Product") purchased after January 1, 1997, to be free from defects in materials or workmanship for two years or 1500 operational hours*, whichever occurs first. Where a warrantable condition exists, we will repair the Product at no cost to you including diagnosis, labor, parts, and transportation. This warranty begins on the date the Product is delivered to the original retail purchaser.

* Product equipped with hour meter

Instructions for Obtaining Warranty Service

You are responsible for notifying the Commercial Products Distributor or Authorized Commercial Products Dealer from whom you purchased the Product as soon as you believe a warrantable condition exists.

If you need help locating a Commercial Products Distributor or Authorized Dealer, or if you have questions regarding your warranty rights or responsibilities, you may contact us at:

Toro Commercial Products Service Department
Toro Warranty Company
8111 Lyndale Avenue South
Bloomington, MN 55420-1196
952-888-8801 or 800-982-2740
E-mail: commercial.service@toro.com

Owner Responsibilities

As the Product owner, you are responsible for required maintenance and adjustments stated in your operator's manual. Failure to perform required maintenance and adjustments can be grounds for disallowing a warranty claim.

Items and Conditions Not Covered

Not all product failures or malfunctions that occur during the warranty period are defects in materials or workmanship. This express warranty does not cover the following:

- Product failures which result from the use of non-Toro replacement parts, or from installation and use of add-on, modified, or unapproved accessories
- Product failures which result from failure to perform required maintenance and/or adjustments
- Product failures which result from operating the Product in an abusive, negligent or reckless manner
- Parts subject to consumption through use unless found to be defective. Examples of parts which are consumed, or used up, during normal Product operation include, but are not limited to, blades, reels, bedknives, tines, spark plugs, castor wheels, tires, filters, belts, etc.
- Failures caused by outside influence. Items considered to be outside influence include, but are not limited to, weather, storage practices, contamination, use of unapproved coolants, lubricants, additives, or chemicals, etc.
- Normal "wear and tear" items. Normal "wear and tear" includes, but is not limited to, damage to seats due to wear or abrasion, worn painted surfaces, scratched decals or windows, etc.

Parts

Parts scheduled for replacement as required maintenance are warranted for the period of time up to the scheduled replacement time for that part.

Parts replaced under this warranty become the property of Toro. Toro will make the final decision whether to repair any existing part or assembly or replace it. Toro may use factory remanufactured parts rather than new parts for some warranty repairs.

General Conditions

Repair by an Authorized Toro Distributor or Dealer is your sole remedy under this warranty.

Neither The Toro Company nor Toro Warranty Company is liable for indirect, incidental or consequential damages in connection with the use of the Toro Products covered by this warranty, including any cost or expense of providing substitute equipment or service during reasonable periods of malfunction or non-use pending completion of repairs under this warranty. Except for the Emissions warranty referenced below, if applicable, there is no other express warranty. All implied warranties of merchantability and fitness for use are limited to the duration of this express warranty.

Some states do not allow exclusions of incidental or consequential damages, or limitations on how long an implied warranty lasts, so the above exclusions and limitations may not apply to you.

This warranty gives you specific legal rights, and you may also have other rights which vary from state to state.

Note regarding engine warranty: The Emissions Control System on your Product may be covered by a separate warranty meeting requirements established by the U.S. Environmental Protection Agency (EPA) and/or the California Air Resources Board (CARB). The hour limitations set forth above do not apply to the Emissions Control System Warranty. Refer to the Engine Emission Control Warranty Statement printed in your operator's manual or contained in the engine manufacturer's documentation for details.

Countries Other than the United States or Canada

Customers who have purchased Toro products exported from the United States or Canada should contact their Toro Distributor (Dealer) to obtain guarantee policies for your country, province, or state. If for any reason you are dissatisfied with your Distributor's service or have difficulty obtaining guarantee information, contact the Toro importer. If all other remedies fail, you may contact us at Toro Warranty Company.

Part No. 374-0031 Rev. –