Form No. 3453-292 Rev A

Road Light Kit

Groundsmaster® 4500-D or 4700-D Traction Unit

Model No. 30670

Installation Instructions

Safety

Safety and Instructional Decals

Safety decals and instructions are easily visible to the operator and are located near any area of potential danger. Replace any decal that is damaged or missing.

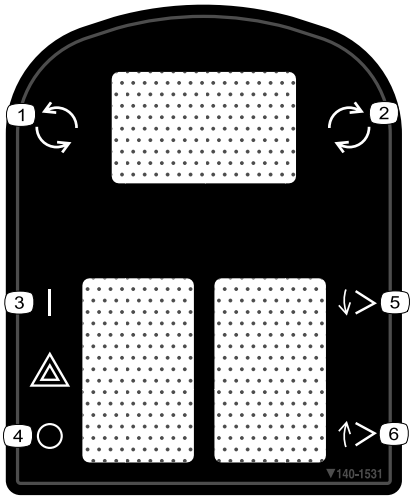

decal140-1531

140-1531

1. Snow chute—left
2. Snow chute—right
3. Hazard light—on
4. Hazard light—off
5. Attachment—down
6. Attachment—up

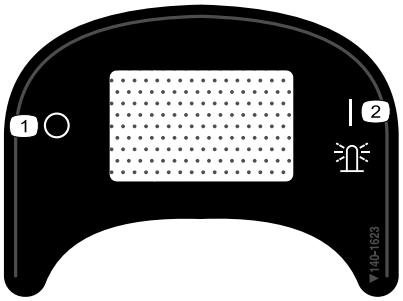

decal140-1623

140-1623

1. Beacon—off
2. Beacon—on

© 2022—The Toro® Company
8111 Lyndale Avenue South
Bloomington, MN 55420

Register at www.Toro.com.

Original Instructions (EN)
Printed in the USA
All Rights Reserved

3453-292

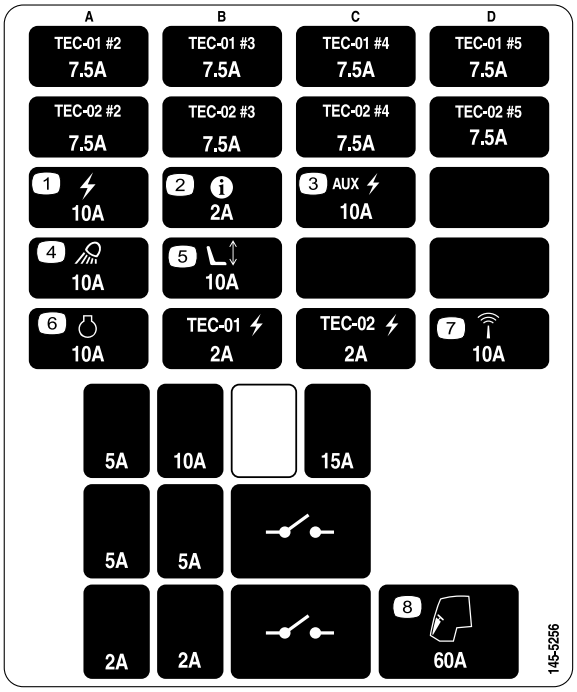

decal145-5256

145-5256

1. Power—10A
2. Infocenter—2A
3. Auxiliary Power—10A
4. Headlights—10A
5. Electric Seat—10A
6. Engine—10A
7. Sensor—10A
8. Cab—60A

Installation

Loose Parts

Use the chart below to verify that all parts have been shipped.

Procedure	Description	Qty.	Use
1	No parts required	–	Prepare the machine.
2	No parts required	–	Drill the mounting holes.
3	Right headlight bracket Left headlight bracket Bolt (3/8 x 2-1/2 inches) Flange nut (3/8 inch) Washer (3/8 x 7/8 inch) Rubber hanger Spacer Bolt (5/16 x 1-5/8 inches) Flange nut (5/16 inch) Right headlight assembly Left headlight assembly Bent-plate bracket	1 1 6 6 8 2 4 4 4 1 1 2	Install the headlights.
4	Horn Horn bracket Bolt (3/8 x 5/8 inch) Flange nut (3/8 inch) Bolt (1/4 x 2 inches) Nut (1/4 inch)	1 1 1 1 2 2	Install the horn.
5	Left light bracket Right light bracket Left light housing Right light housing Inner mount Screw (#10 x 1-1/4 inches) Flange nut (1/4 inch) Carriage bolt (1/4 x 5/8 inches) Screw (1/4 x 3/4 inches) Screw (5/8 x 3 inches) Flat washer Jam nut (5/8 inch) Rear-light assembly Clip nut (1/4 inch)	1 1 1 1 2 4 6 2 8 4 4 2 2 2	Install the rear lamps.
6	Plate light Plate bracket Screw (#10 x 1 inch) Speed nut (#10) Self-tapping screw (5/16 x 1/2 inch)	1 1 2 2 2	Install the license-plate bracket.
7	Wire harness Magnetic cable-tie mounts Cable tie	1 2 8	Install the wire harness.

Procedure	Description	Qty.	Use
8	Switch mount assembly	1	Install the control console.
	Control cover	1	
	Fuse mount plate	1	
	Clip nut (#10)	3	
	Flasher	1	
	Flange head screw (#10 x 3/8 inch)	1	
	Cable tie	1	
	Bracket mount	2	
	Clip nut (1/4 inch)	8	
	Switch mount	1	
	Multi-function switch	1	
	Switch clip (thick)	1	
	Switch clip (thin)	1	
	Switch plug	3	
	Rocker switch	1	
	Knob	2	
	Fuse cover	1	
	Bolt retainer	2	
	Carriage bolt (1/4 x 2 inches)	4	
	Flange locknuts	4	
	Cable ties	2	
	Push-in fastener	2	
	Flange-heads screw (1/4 x 3/4 inch)	6	
9	Fuse (2 A)	1	Install the decal.
	Fuse decal	1	
10	Plate	2	Install the decal-mounting plates.
	Decal	4	
	Hex-head screw (1/4 x 2-1/2 inches)	4	
	Locknut (1/4 inch)	4	

1

Preparing the Machine

No Parts Required

Procedure

1. Park the machine on a level suface.
2. Disengage the PTO and engage the parking brake.
3. Lower the cutting units.
4. Shut off the engine and remove the key.
5. Disconnect the negative (-) battery cable.

2

Drilling the Mounting Holes

No Parts Required

Drilling the Holes for the Headlights and the Wire Harness

1. Remove the nuts from the 2 carriage bolts securing the headlights to the traction-unit frame (Figure 1).
2. Remove the 2 self-tapping bolts securing the top of the platform shroud to the frame (Figure 1).
3. Unplug the headlight connectors and remove the platform shroud from the frame (Figure 1).

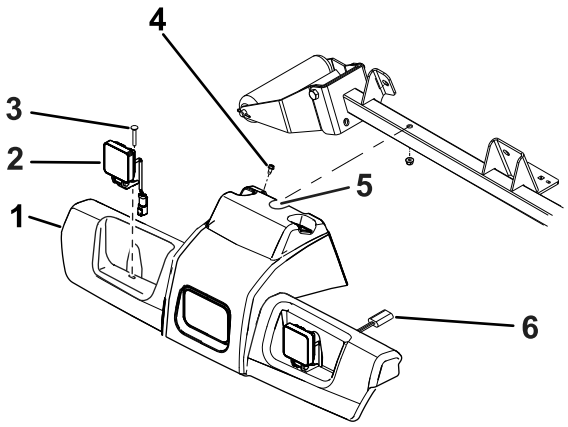

g371181

Figure 1

1. Platform shroud
2. Headlight assembly
3. Carriage bolt (2)
4. Self-tapping bolt (2)
5. Create a notch here.
6. Headlight connector

4. Grind a notch in the steering cover as shown in Figure 2.

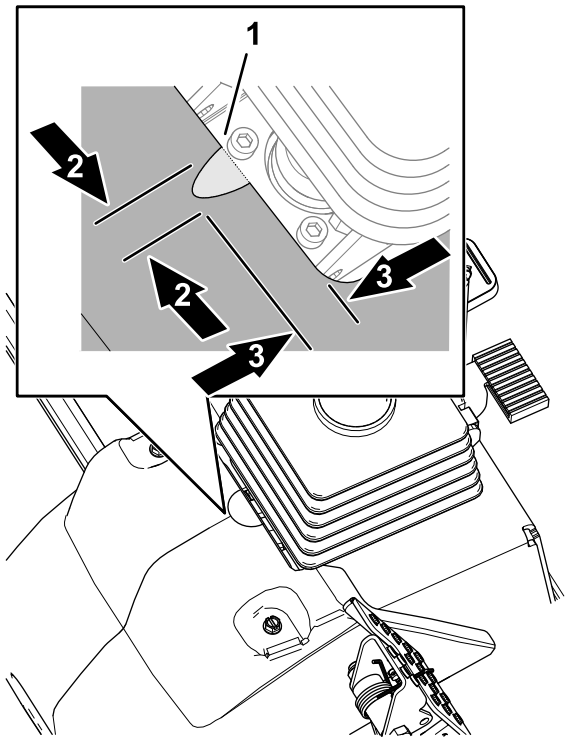

g384533

Figure 2

1. Notch (headlight assembly)
2. 16 mm (5/8 inch)
3. 7 cm (2-3/4 inches)

5. Using the dimensions in Figure 3, locate and drill 6 holes (1.0 cm) through both walls of the roller-support tube.

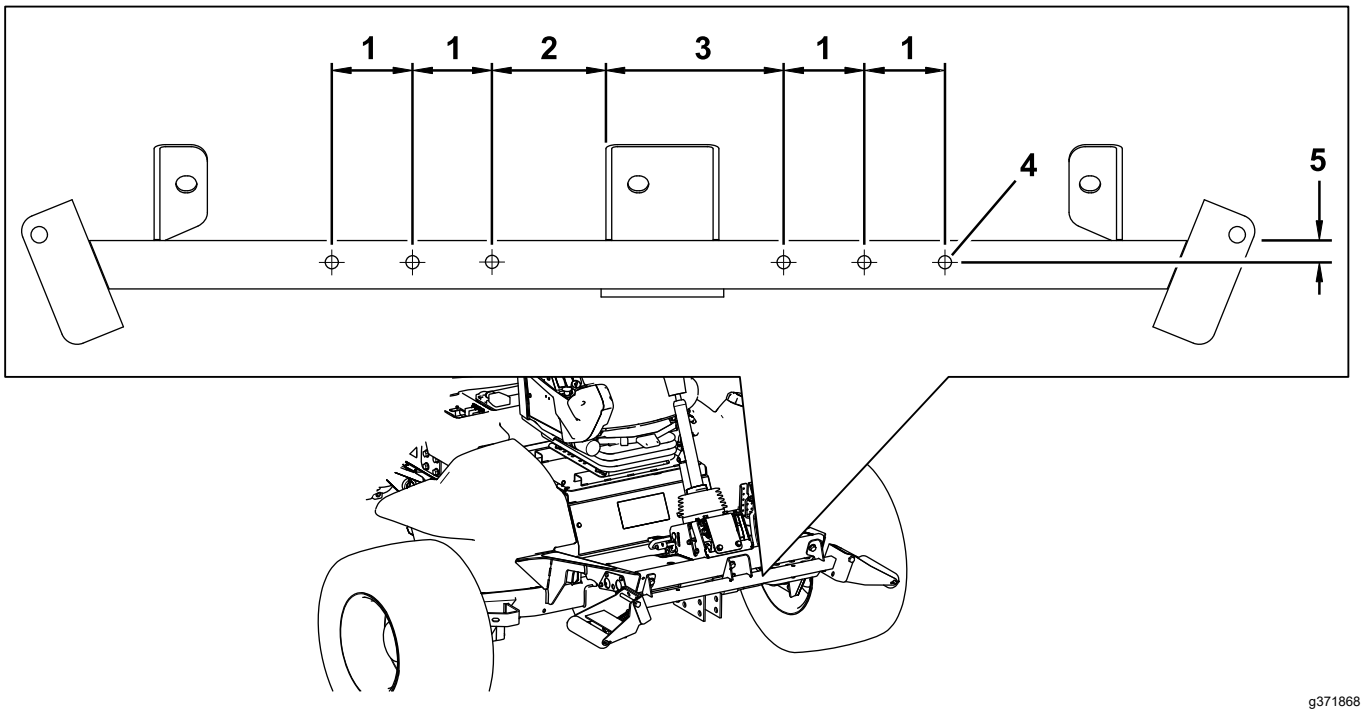

g371868

Figure 3

1. 6.4 cm (2-1/2 inches)
2. 8.9 cm (3-1/2 inches)
3. 14.0 cm (5-1/2 inches)
4. 1.0 cm (13/32 inch) diameter
5. 1.9 cm (3/4 inch)

Drilling the Holes for the Horn Bracket

Using the dimensions in Figure 4, locate and drill 2 holes (9/32 inch) through both walls of the roller-support tube.

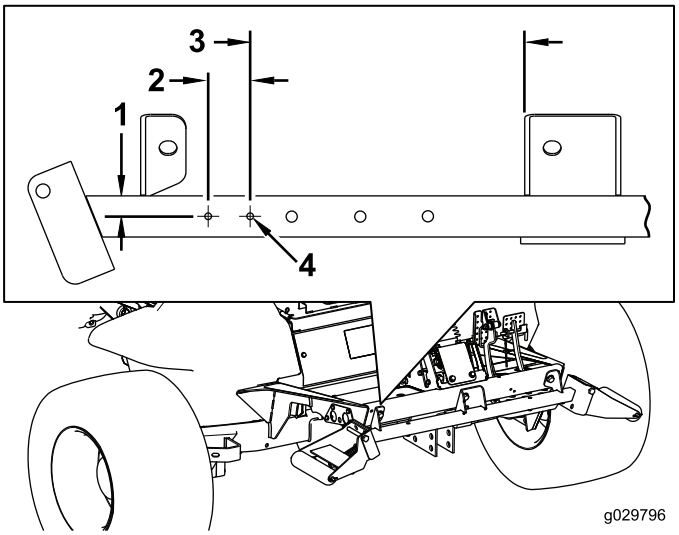

g029796

g029796

Figure 4

1. 1.9 cm (3/4 inch)
2. 3.8 cm (1-1/2 inches)
3. 25.4 cm (10 inches)
4. 7 mm (9/32 inch) diameter

Drilling the Mounting Holes in the Rear Bumper for the License Plate

Using the dimensions shown in Figure 5, locate and drill 2 holes (9/32 inch) through the outside wall of the rear bumper.

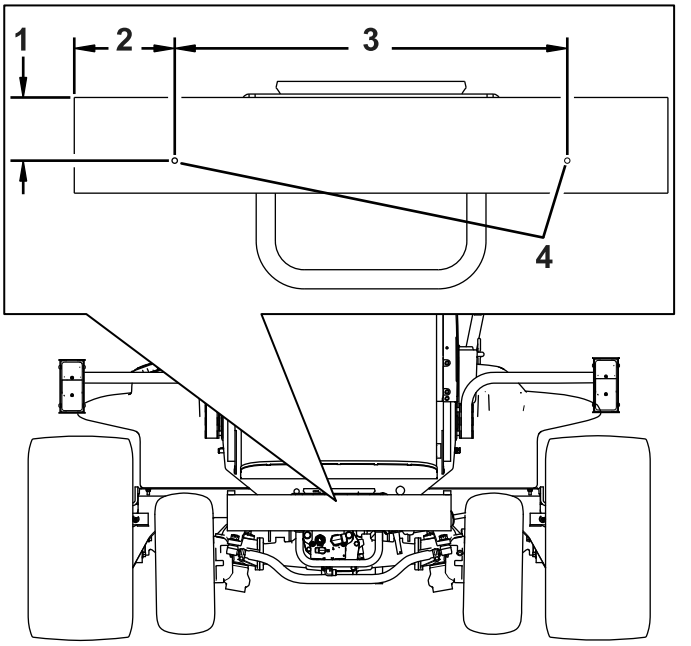

Figure 5

1. 8.3 cm (3-1/3 inches)
2. 13.3 cm (5-1/4 inches)
3. 52.07 cm (20-1/2 inches)
4. Drill a hole (9/32 inch) here.

3

Installing the Headlights

Parts needed for this procedure:

1	Right headlight bracket
1	Left headlight bracket
6	Bolt (3/8 x 2-1/2 inches)
6	Flange nut (3/8 inch)
8	Washer (3/8 x 7/8 inch)
2	Rubber hanger
4	Spacer
4	Bolt (5/16 x 1-5/8 inches)
4	Flange nut (5/16 inch)
1	Right headlight assembly
1	Left headlight assembly
2	Bent-plate bracket

Installing the Headlight Bracket to a ROPS Model

1. Fasten the left and right headlight brackets to the front of the roller-support tube with 6 bolts (3/8 x 2-1/2 inches) and 6 flange nuts (3/8 inch) as shown in Figure 6.

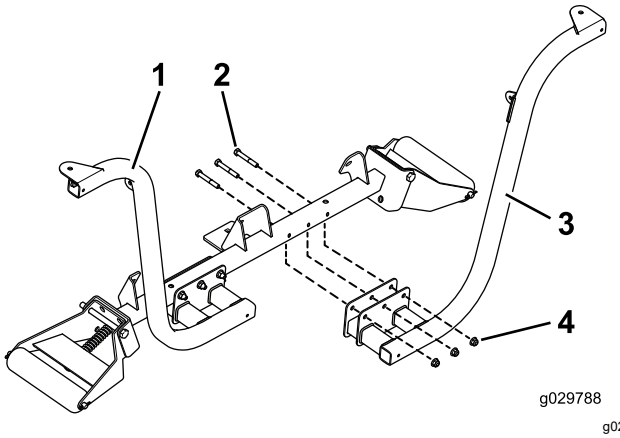

g029788

Figure 6

1. Installed headlight bracket
2. Bolts (3/8 x 2-1/2 inches)
3. Headlight bracket
4. Flange nuts (3/8 inch)

Note: Position the bolts so that the flange nuts are toward the front of the traction unit.

2. Fasten the left and right headlights to the headlight brackets (Figure 7) with the fasteners supplied with the lights.

Note: Ensure that the turn-signal lens on the headlight is positioned toward the outside of the traction unit.

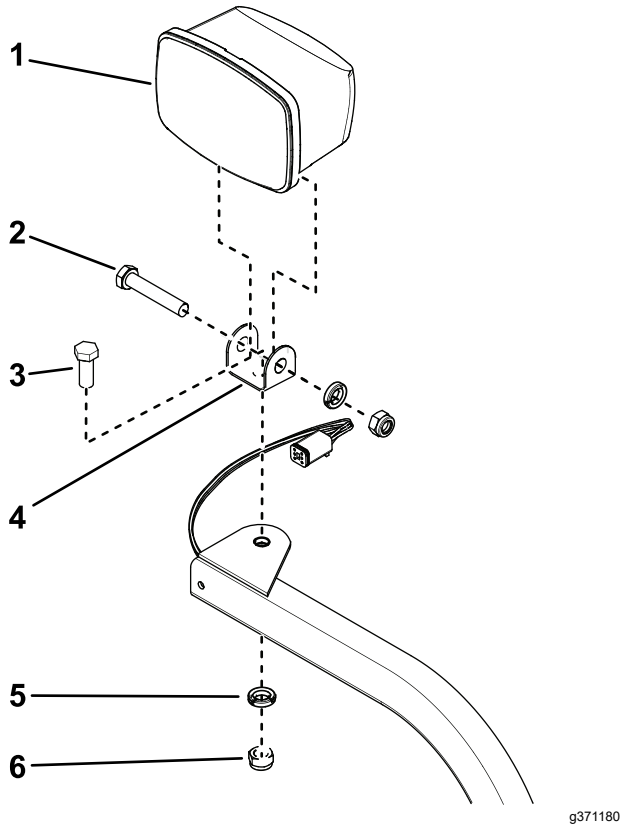

Figure 7

Right headlight assembly shown

1. Headlight
2. Pivot bolt with locknut
3. Mounting bolt
4. Pivot bracket
5. Washer
6. Locknut (M12)

3. Tighten the locknut to firmly hold the headlight assembly to the headlight bracket.

   Note: Do not overtighten the locknut.

Installing the Headlight Bracket to a Cab Model

1. Install a bent-plate bracket onto each of the upper corners of the lower front panel of the cab with the existing screws as shown in Figure 8.

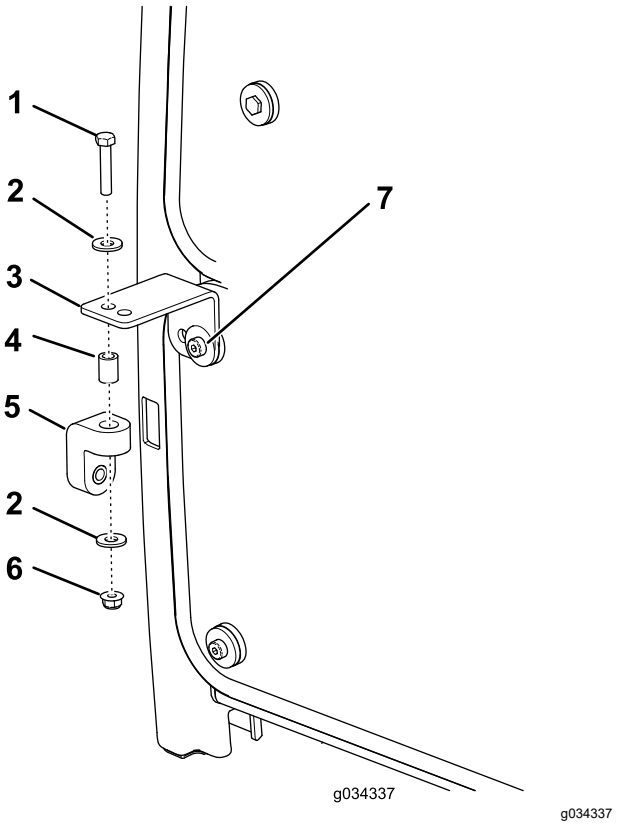

Figure 8

1. Bolt (5/16 x 1-5/8 inches)
2. Washer
3. Bent-plate bracket
4. Spacer
5. Rubber hanger
6. Flange nut (5/16 inch)
7. Screw (existing)

2. Loosely install a rubber hanger to each bent-plate bracket with a bolt (5/16 x 1-5/8 inch), 2 washers (3/8 inch), a spacer, and a flange nut (5/16 inch) as shown in Figure 8.
3. Loosely install the left and right headlight brackets to the front of the roller-support tube with 6 bolts (3/8 x 2-1/2 inches) and flange nuts (3/8 inch). Position the brackets as shown in Figure 9.

   Note: Ensure that the holes in the bent-plate brackets align with the holes in the rubber hangers.

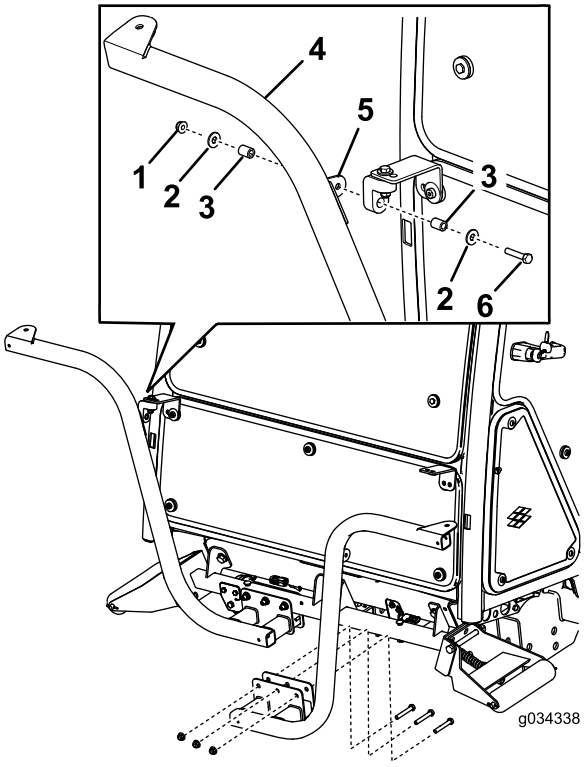

g034338

Figure 9

1. Nut (5/16 inch)
2. Washer
3. Spacer
4. Headlight bracket
5. Bracket tab
6. Bolt (5/16 x 1-5/8 inch)

4. Fasten the left and right headlight assemblies to the headlight brackets (Figure 7) with the fasteners supplied in the kit.

   Note: Ensure that the turn-signal lens on the headlight is positioned toward the outside of the traction unit.

5. Tighten the locknut to firmly hold the headlight assembly to the headlight-assembly bracket.

Note: Do not overtighten the locknut.

Note: You cannot use the front and rear cab lights for CE applications. Disable the front and rear cab lights as follows:

- **Front**—Remove the lights from the cab roof and disconnect the wires from the lights. Install the lights into the cab.
- **Rear**—Remove the screws securing the lenses to the lights. Remove the bulbs from the lights and install the lenses to the lights.

4

Installing the Horn

Parts needed for this procedure:

1	Horn
1	Horn bracket
1	Bolt (3/8 x 5/8 inch)
1	Flange nut (3/8 inch)
2	Bolt (1/4 x 2 inches)
2	Nut (1/4 inch)

Procedure

1. Secure the horn strap to the horn bracket with a bolt (3/8 x 5/8 inch) and a flange nut (3/8 inch) as shown in Figure 10.

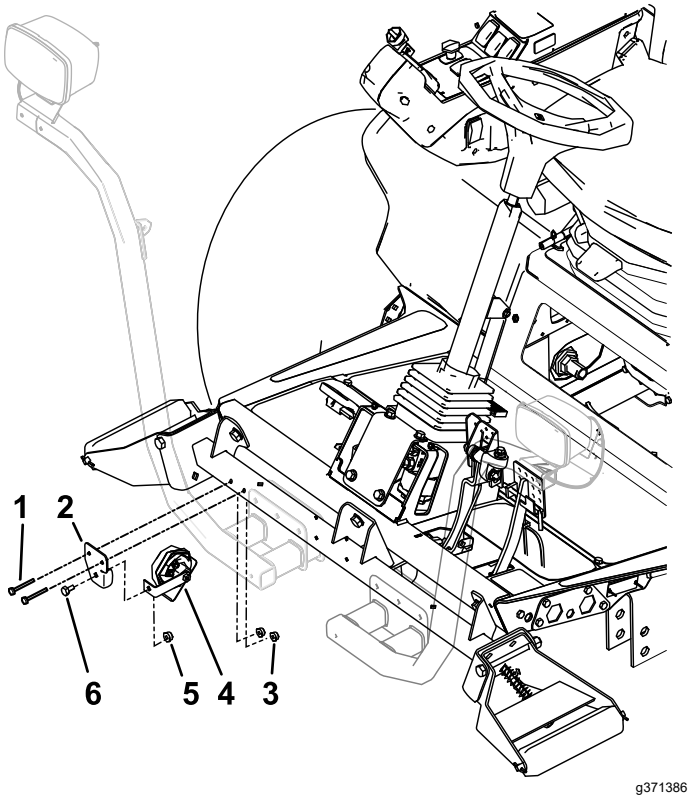

Figure 10

1. Bolt (1/4 x 2 inches)
2. Horn bracket
3. Nut (1/4 inch)
4. Horn with strap
5. Flange nut (3/8 inch)
6. Bolt (3/8 x 5/8 inch)

2. Mount the horn bracket to the back side of the roller-support tube with 2 bolts (1/4 x 2 inches) and nuts (1/4 inch). Rotate the horn so that it faces down (Figure 10).

5

Installing the Rear Lamps

Parts needed for this procedure:

1	Left light bracket
1	Right light bracket
1	Left light housing
1	Right light housing
2	Inner mount
4	Screw (#10 x 1-1/4 inches)
6	Flange nut (1/4 inch)
2	Carriage bolt (1/4 x 5/8 inches)
8	Screw (1/4 x 3/4 inches)
4	Screw (5/8 x 3 inches)
4	Flat washer
2	Jam nut (5/8 inch)
2	Rear-light assembly
2	Clip nut (1/4 inch)

Procedure

1. Remove the 2 bolts, 2 flat washers, and 2 jam nuts connected to the left and right frame rails.
2. Secure the left and right light bracket to the frame with 2 bolts (5/8 x 3 inches), 2 flat washers and 2 jam nuts (5/8 inch) as shown in (Figure 11 and Figure 12).

   Note: The left and right light brackets are different. Ensure that you use the correct mount.
3. Secure the left and right light housings to the left and right light brackets with 4 carriage bolts (5/8 x 3 inches) and 4 flange nut (1/4 inch) as shown in (Figure 12).

   Note: The left and right light brackets are different. Ensure that you use the correct mount.

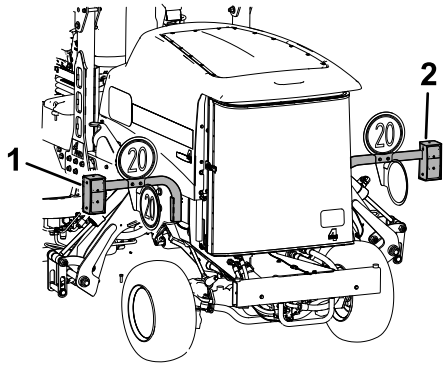

g371674

Figure 11

1. Left light
2. Right light

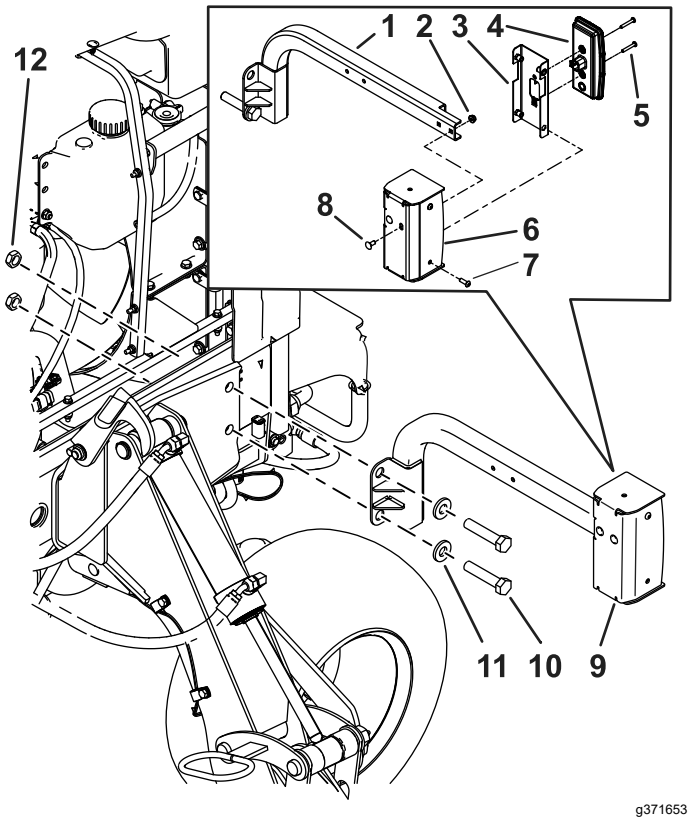

g371653

Figure 12

Left side shown

1. Left light bracket
2. Screw (1/4 x 3/4 inches)
3. Inner mount
4. Rear lamp
5. Screw (#10 x 1-1/4 inches)
6. Left light housing
7. Screw (1/4 x 3/4 inches)
8. Carriage bolt (1/4 x 5/8 inches)
9. Left light housing
10. Screw (5/8 x 3 inches)
11. Flat washer
12. Jam nut (5/8 inch)

4. Assemble the 2 clip nuts (1/4 inch) to the inner mount (Figure 13).

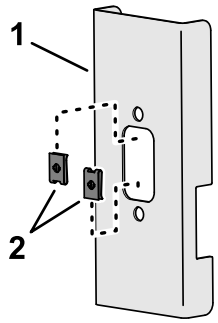

g371870

Figure 13

1. Inner mount
2. Clip nut (1/4 inch)

Note: After routing the wire harness through the light brackets, mount the rear-light assemblies to inner mounts with 4 screws (#10 x 1-1/4 inches) and nuts included with the light (Figure 25).

6

Installing the License-Plate Bracket

Parts needed for this procedure:

1	Plate light
1	Plate bracket
2	Screw (#10 x 1 inch)
2	Speed nut (#10)
2	Self-tapping screw (5/16 x 1/2 inch)

Procedure

1. Secure the plate light to the license-plate bracket with 2 screws (#10 x 1 inch) and 2 locknuts (Figure 14 and Figure 15).

   Note: Do not overtighten the screws. Ensure that the lens points downward and the wires are inserted through the hole in the license-plate bracket.

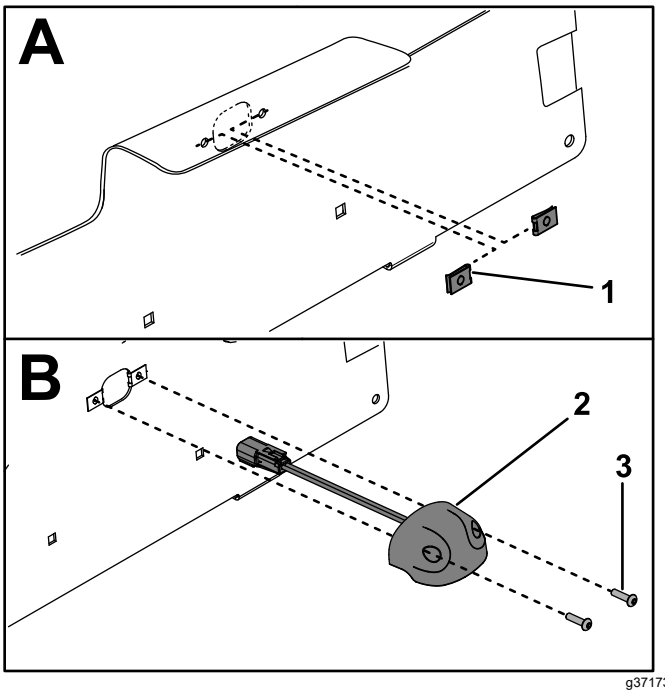

g371733

Figure 14

1. Speed nut (#10)
2. Plate light
3. Screw (#10 x 1 inch)

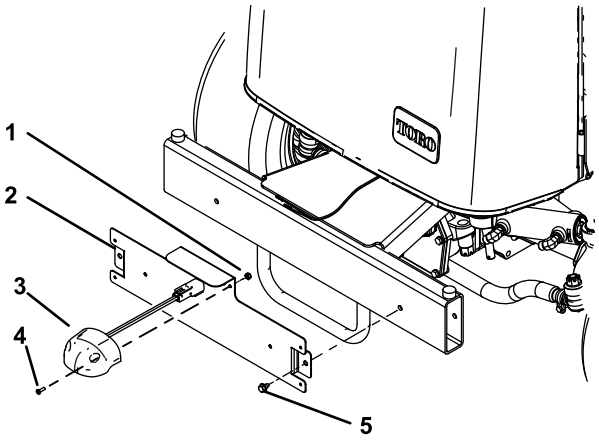

g371652

Figure 15

1. Speed nut (#10)
2. License-plate bracket
3. Plate light
4. Screw (#10 x 1 inch)
5. Self-tapping screw (5/16 x 1/2 inch)

2. Mount the license-plate bracket to the rear bumper with 2 self-tapping screws (5/16 x 1/2 inch) as shown in Figure 15.

7

Installing the Wire Harness

Parts needed for this procedure:

1	Wire harness
2	Magnetic cable-tie mounts
8	Cable tie

Procedure

Use the following instructions and illustrations to route and connect the wire harness. When routing the light harness, follow the main machine harness.

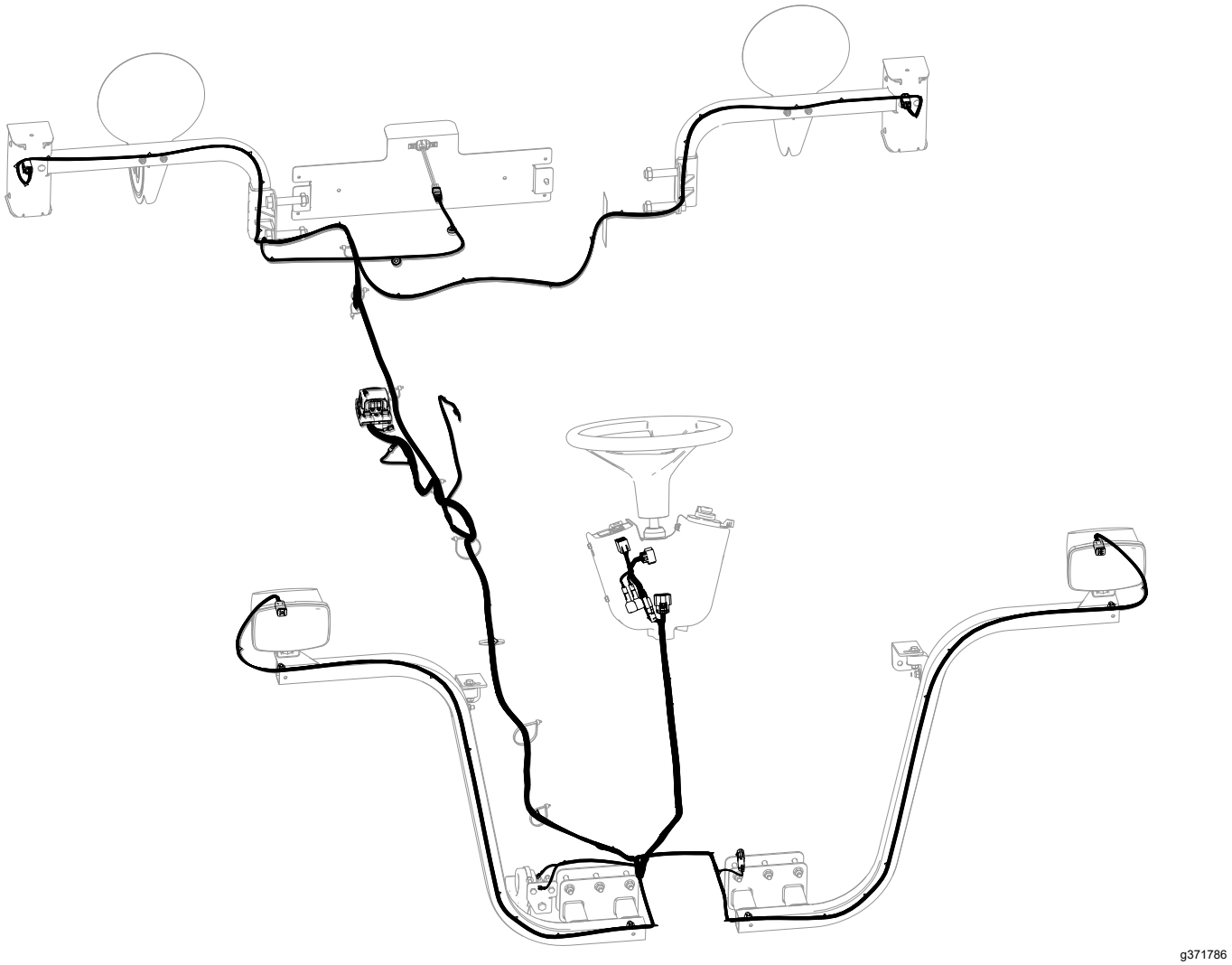

g371786

Figure 16

1. Remove the flange-head screw securing the compartment clamp and seal to the traction unit (Figure 17).

Note: Remove the clamp and seal to gain access to the fuse compartment.

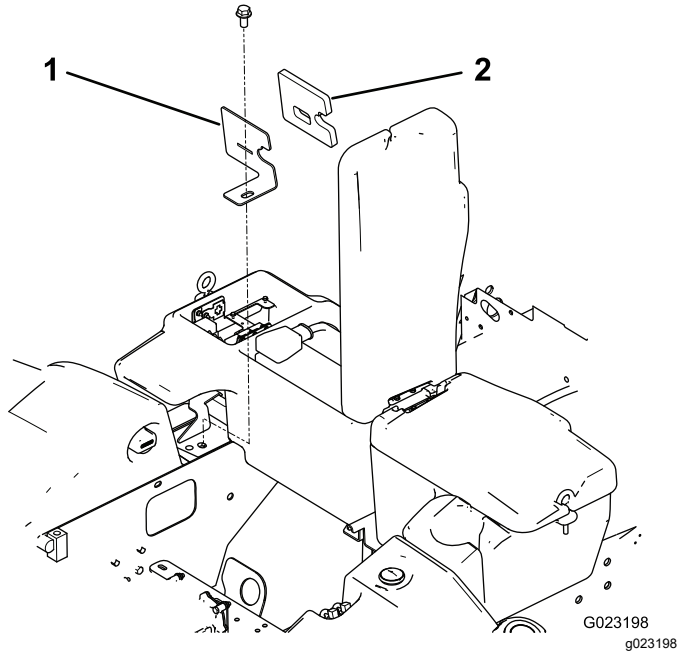

Figure 17

1. Compartment clamp
2. Seal

2. Remove the relays, fuse block, grounding block, and fuse clip from the steel plate in the fuse compartment next to the battery (Figure 18).

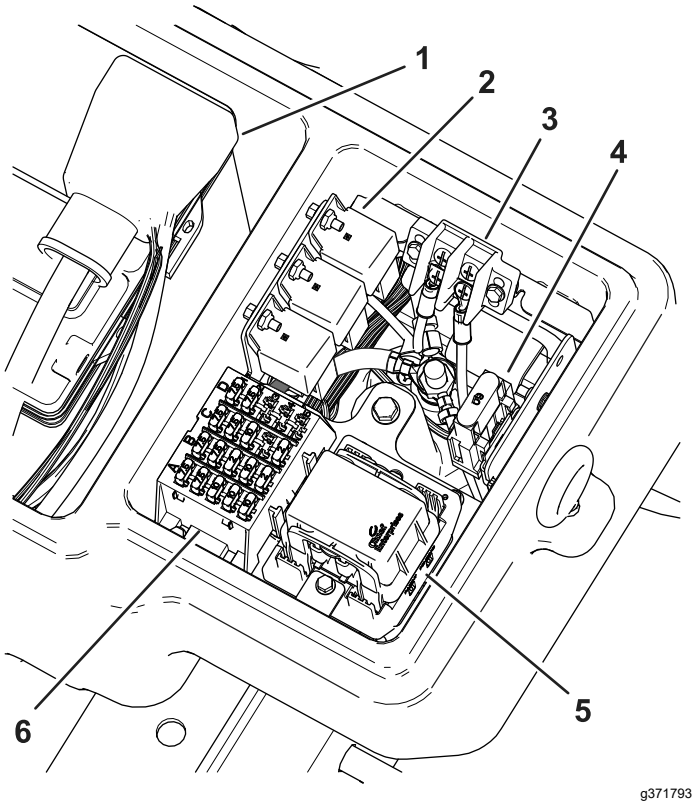

Figure 18

1. Battery
2. Relays
3. Grounding block
4. Fuse clip
5. Module installed
6. Fuse block

3. Remove the bolts holding the steel plate in the fuse compartment.
4. Locate the module on the wire harness (Figure 19).

   Important: **When routing the wire harness, do not pull it across sharp edges, which may damage the wires. Wires must not contact hot or moving parts. Secure the wire harness with cable ties.**
5. Route the whole wire harness through the new steel plate and the hole located at the compartment clamp (Figure 17 and Figure 19). Route the wire harness until the module contacts the steel plate.

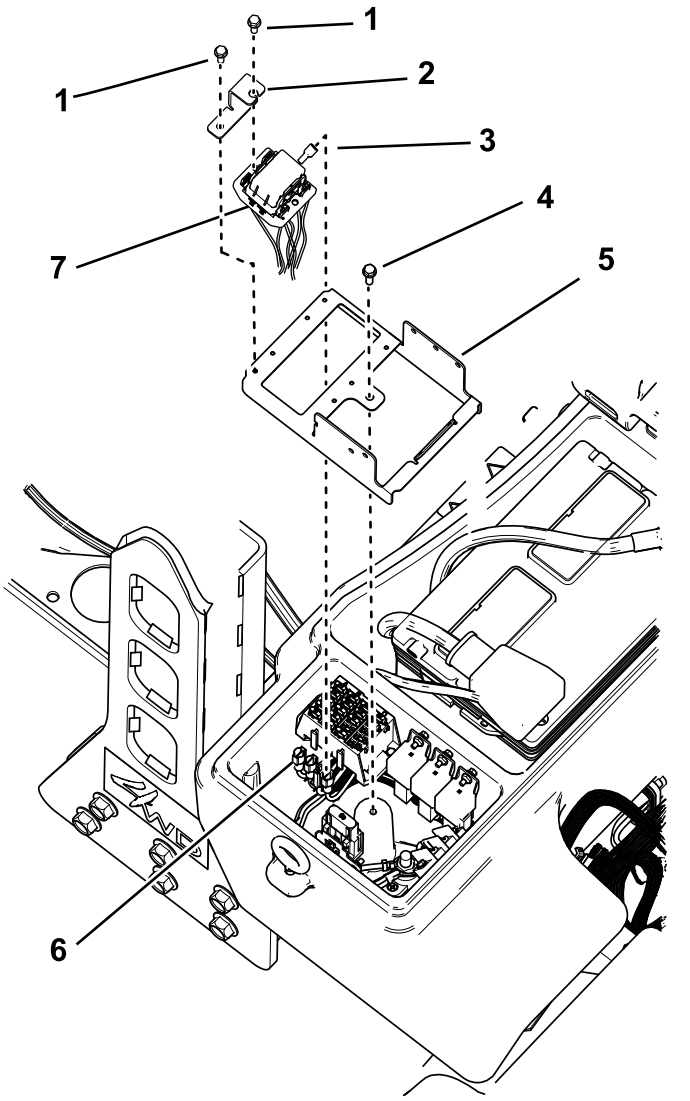

Figure 19

1. Bolt (#8 x 1/2 inch)
2. Bracket
3. Connector on the bottom of module
4. Existing bolt
5. New steel plate
6. Connectors from fuse block
7. Module in the harness
8. Bolt (#8 x 1/2 inch)

6. Install the new steel plate into the fuse compartment with the previously removed bolts.
7. Connect the large-ring terminal, from the wire harness, to the stud on the junction block (Figure 20).
8. Connect the small-ring terminal from the wire harness to 1 of the screws on the ground-block terminal (Figure 20).

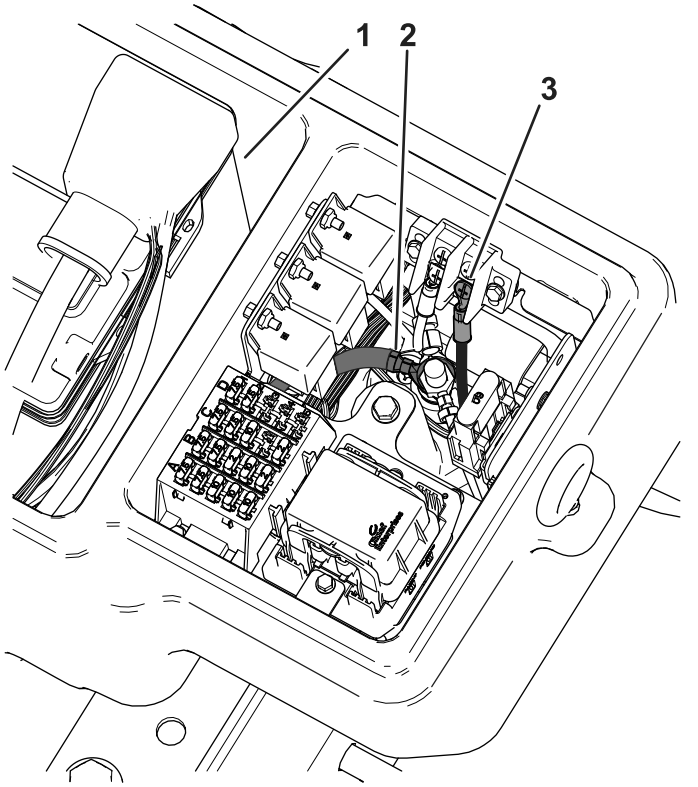

g371732

Figure 20

1. Battery
2. Large-ring terminal
3. Small-ring terminal

9. Install the module to the steel plate with the bracket and 2 bolts (#8 x 1/2 inch); refer to Figure 19.

   Note: Do not overtighten the screws.
10. Install the compartment clamp and seal to the traction unit with the flange-head screw (Figure 17).
11. Route the front end of the wire harness under the operator platform to the front of the traction unit (Figure 21).

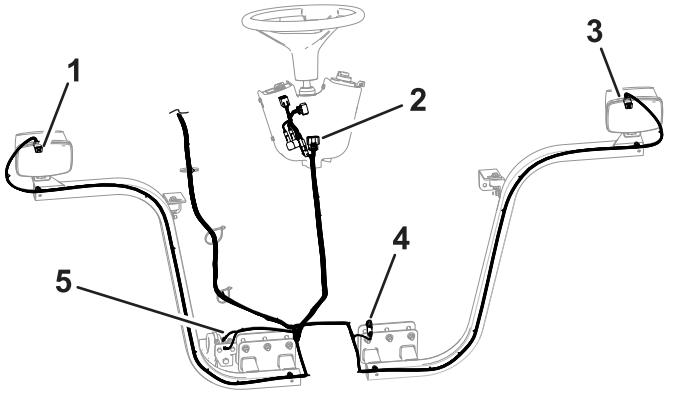

g371712

Figure 21

1. Right front-light conncector
2. Connectors for the controls
3. Left front-light conncector
4. Brake connector
5. Horn connectors

12. Thread each harness connector through the appropriate headlight bracket and connect it to the headlight (Figure 21).
13. Plug the wire harness lead, with the 2 connectors, into the horn (Figure 22).

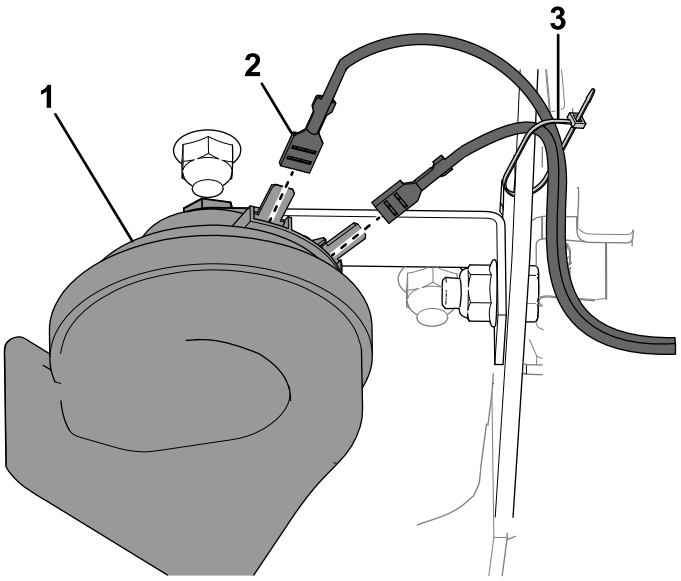

g371794

Figure 22

1. Horn
2. Connectors
3. Cable tie

14. Position the platform shroud on top of the frame (Figure 23).
15. Secure the shroud and the headlights to the frame with the 2 carriage bolts and nuts you previously removed (Figure 23).

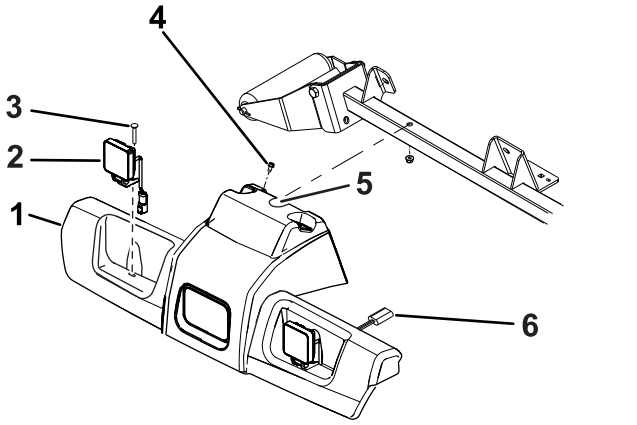

g371181

Figure 23

1. Platform shroud
2. Headlight assembly
3. Carriage bolt (2)
4. Self-tapping bolt (2)
5. Create a notch here.
6. Headlight connector

16. Route the wire harness to the steering column. The steering column connections will be installed when the control console is installed.
17. Connect the brake connector to the main harness under the platform near the brake connections (Figure 21).
18. Route the wire harness to the back of the machine under the right side of the traction unit (Figure 26).
19. Route the left wire connector under to the left, to the rear light bracket.
20. Thread each rear light connector through the appropriate rear light bracket (Figure 24).

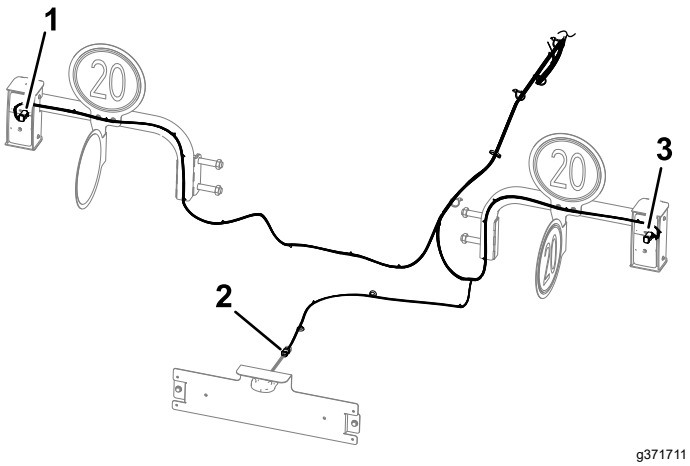

g371711

Figure 24

1. Left, rear-light connector
2. Right, rear-light connector
3. License-plate connector

21. Align the 4-socket connector of the harness through the inner mount (Figure 25).
22. Assemble the inner mount into the light housing, and secure the mount to the housing (Figure 25) with 4 socket-head screws (1/4 x 3/4 inch).
23. Align the taillight to the light housing with the yellow lens positioned as shown in Figure 25.
24. Plug the 4-socket connector of the harness into the 4-pin connector of the taillight (Figure 25).
25. Assemble the taillight into the light housing, and secure the light to the housing (Figure 25) with 2 Phillips-head screws (#10 x 1-1/4 inches).

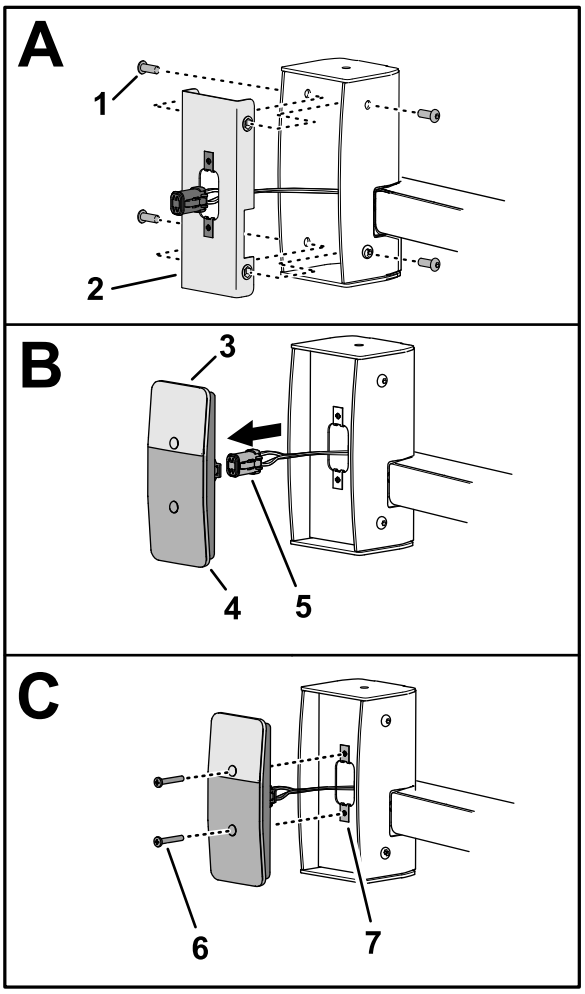

g371798

Figure 25

1. Socket-head screw (1/4 x 3/4 inch)
2. Inner mount
3. Yellow lens (taillight)
4. Red lens (taillight)
5. 4-socket connector (taillight harness)
6. Phillips-head screw (#10 x 1-1/4 inches)
7. Clip nut (#10)

26. Route the wire harness to the license-plate light and plug the wire-harness connector into the light connector (Figure 24).

Important: **Secure the wire harness with cable ties so that it does not contact any hot or moving parts (Figure 26).**

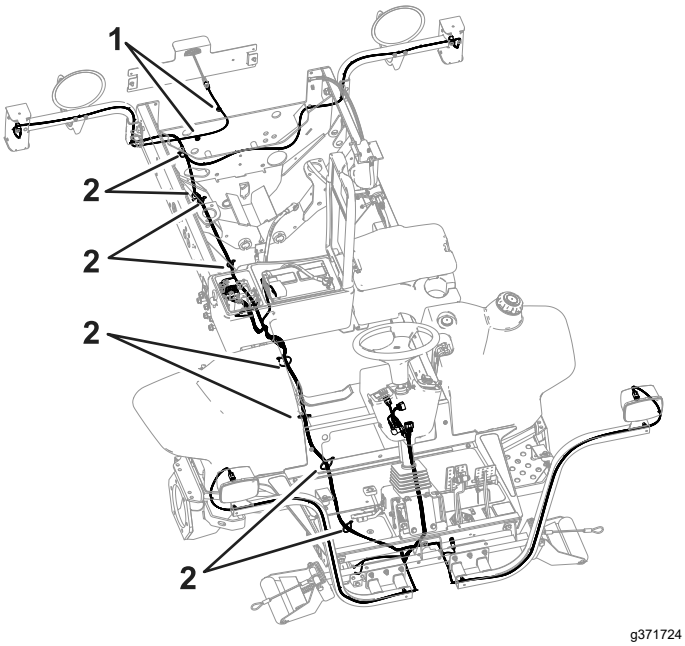

Figure 26

1. Magnetic cable-tie mounts 2. Cable tie

27. Install any parts that were removed from the traction unit to route the wire harness.

8

Installing the Control Console

Parts needed for this procedure:

1	Switch mount assembly
1	Control cover
1	Fuse mount plate
3	Clip nut (#10)
1	Flasher
1	Flange head screw (#10 x 3/8 inch)
1	Cable tie
2	Bracket mount
8	Clip nut (1/4 inch)
1	Switch mount
1	Multi-function switch
1	Switch clip (thick)
1	Switch clip (thin)
3	Switch plug
1	Rocker switch
2	Knob
1	Fuse cover
2	Bolt retainer
4	Carriage bolt (1/4 x 2 inches)
4	Flange locknuts
2	Cable ties
2	Push-in fastener
6	Flange-heads screw (1/4 x 3/4 inch)

Assembling the Fuse Mount Plate

1. Align the connectors for the controls through the previously made notch in the headlight assembly (Figure 2).
2. Pull the boot down and assemble the bottom of it into the steering cover.
3. Assemble the clip nut (#10) onto the fuse mount plate (Figure 27).

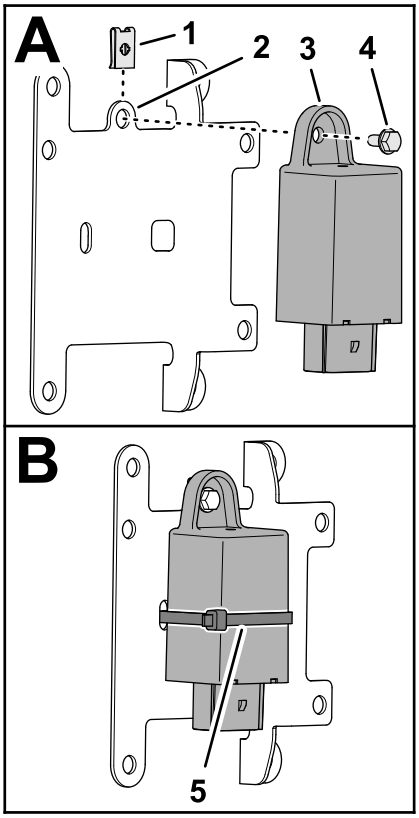

g350763

Figure 27

1. Clip nut (#10)
2. Fuse mount plate
3. Flasher
4. Flange head screw (#10 x 3/8 inch)
5. Cable tie

4. Assemble the flasher to the mount plate (Figure 27) with a flange head screw (#10 x 3/8 inch).
5. Secure the flasher to the mount plate with a cable tie (Figure 27).
6. Plug the 12-socket connector of the console harness into the 12-pin connector of the flasher (Figure 28).

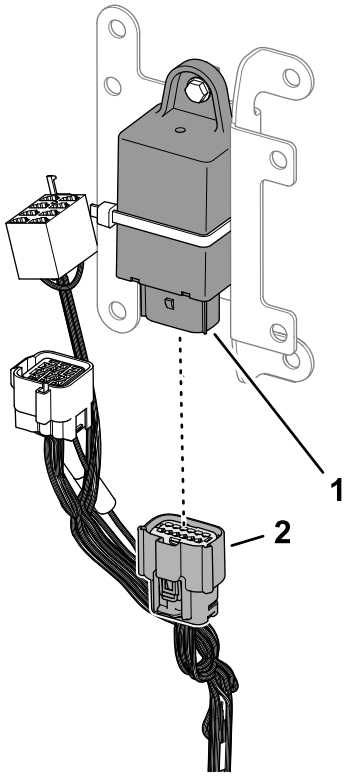

g371871

Figure 28

1. 12-pin connector (flasher)
2. 12-pin socket (console harness)

7. Insert push-in anchor of the console harness into the 6.4 mm (1/4 inch) hole in the bracket mount (Figure 29).

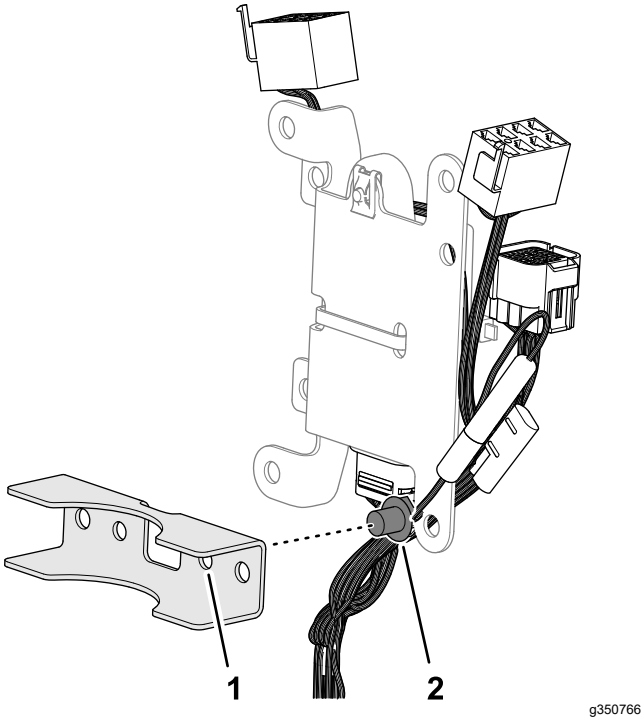

Figure 29

1. Bracket mount
2. Push-in anchor (console harness)

Assembling the Switch Mount

1. Assemble the 8 clip nut (1/4 inch) to the switch mount as shown in Figure 30.

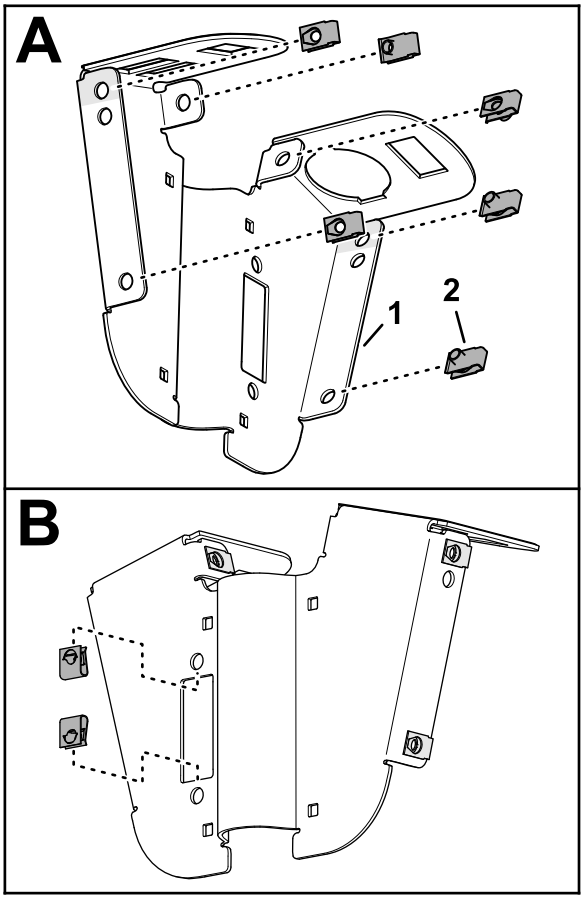

Figure 30

1. Switch mount
2. Clip nut (1/4 inch)

2. Insert the multi-function switch into the 51 mm (2 inch) hole in the switch mount as shown in Figure 31.

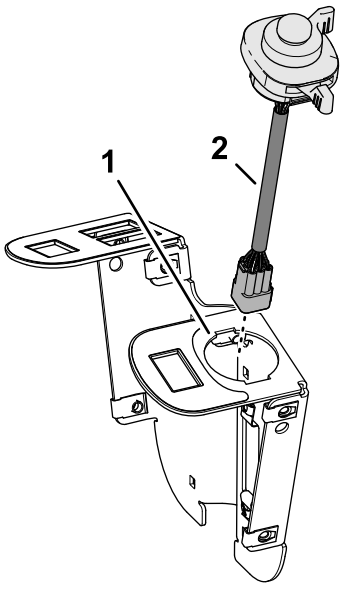

Figure 31

1. Switch mount
2. Multi-function switch

3. Secure the multi-function switch to the switch mount with the thick and thin switch clips (Figure 32).

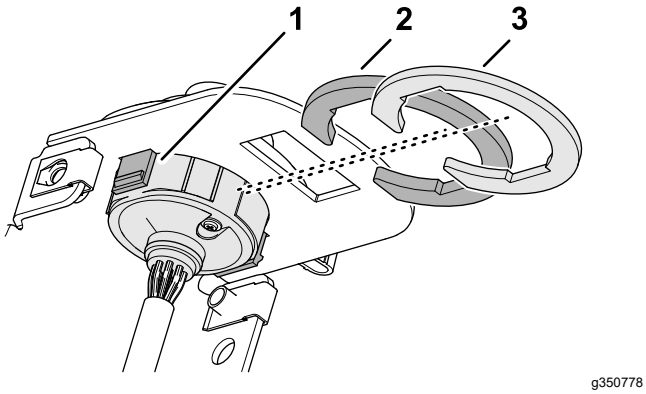

Figure 32

1. Tab (multi-function switch)
2. Switch clip (thick)
3. Switch clip (thin)

4. Insert the 3 switch plugs into the switch mount as shown in Figure 33.

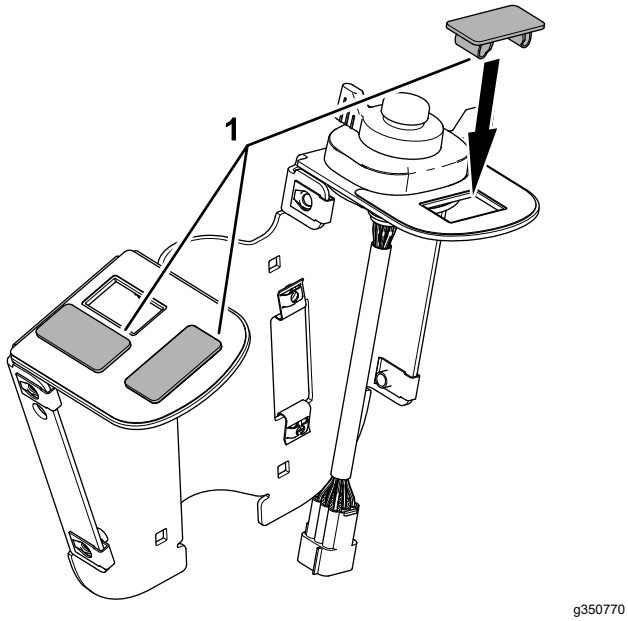

Figure 33

1. Switch plug

5. Align the rocker switch to the switch mount with the lens of the light to the front of the switch plate (Figure 34).

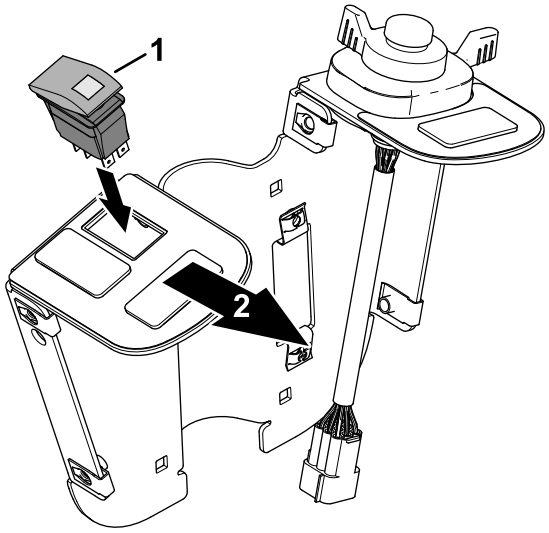

Figure 34

1. Rocker switch
2. Front of the switch plate

6. Assemble the 2 knobs into the fuse cover, and secure the knobs with 2 bolt retainers (Figure 35).

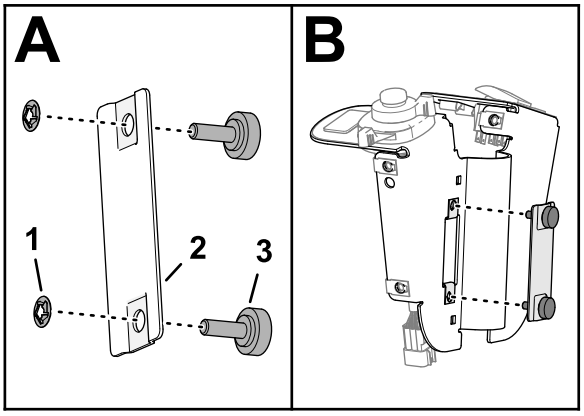

Figure 35

1. Bolt retainer
2. Fuse cover
3. Knob

7. Assemble the fuse cover to the switch plate, and tighten the knobs (Figure 35).

Installing the Switch Plate to the Steering Column

1. Align the switch plate to the rearward side or the steering column (Figure 37).

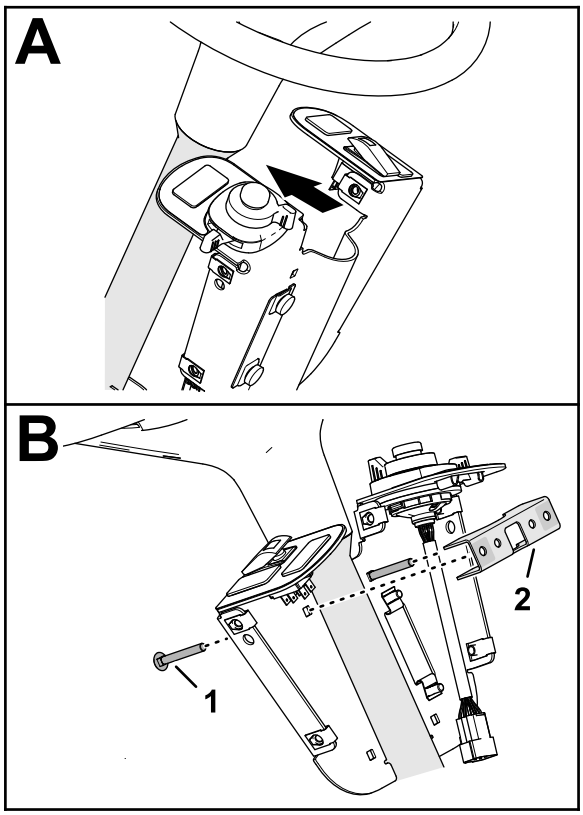

g350762

Figure 36

1. Carriage bolt (1/4 x 2 inches)
2. Bracket mount

2. At the upper 6.4 mm (1/4 inch) holes, assemble 2 carriage bolts bolt (1/4 x 2 inches) through the switch plate and the other bracket mount (Figure 36).
3. Assemble the fuse mount plate to the upper bracket mount and carriage bolts (Figure 37) with 2 flange locknuts (1/4 inch).

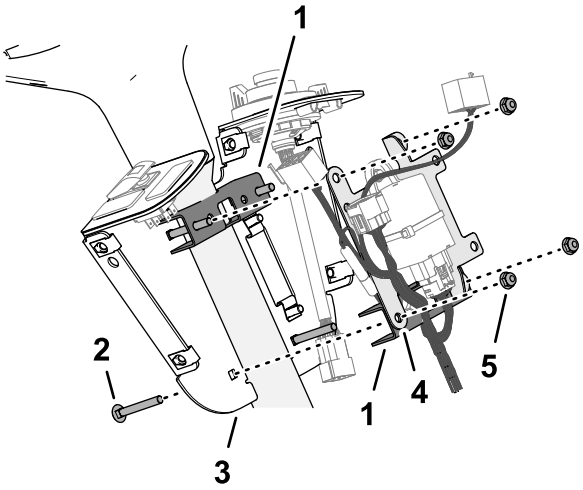

g350772

Figure 37

1. Bracket mount
2. Carriage bolt (1/4 x 2 inches)
3. Switch mount
4. Fuse mount plate
5. Flange locknut (1/4 inch)

4. At the lower 6.4 mm (1/4 inch) holes, assemble 2 carriage bolts bolt (1/4 x 2 inches) through the switch plate, bracket mount, and fuse mount plate (Figure 37) with 2 carriage bolts (1/4 x 2 inches) and 2 flange locknuts (1/4 inch).
5. Align the switch plate to the operator's seat, and tighten the 4 flange locknuts.

Connecting the Console Harness to the Switches

1. Plug the 8-socket connector of the control harness labeled HAZARD SWITCH into the 8-pin connector of the rocker switch (Figure 38).

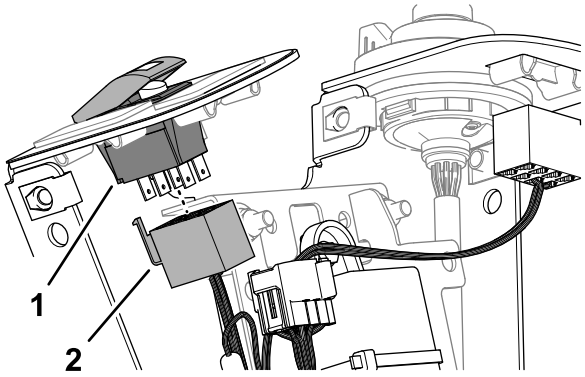

g350776

Figure 38

1. 8-pin connector (rocker switch)
2. 8-socket connector (labeled HAZARD SWITCH—console harness)

2. Plug the 9-pin connector of the multi-function switch harness into the 9-socket connector of the console harness (Figure 39).

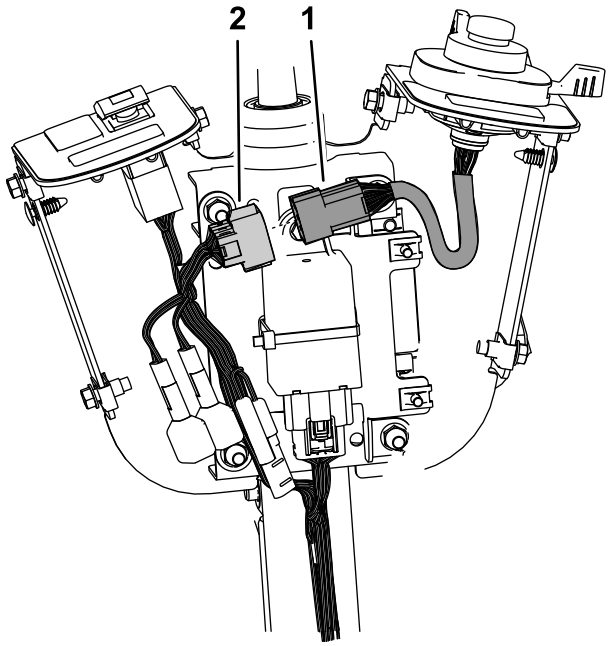

g371429

Figure 39

1. 9-pin connector (multi-function switch harness)
2. 9-socket connector (console harness)

3. Secure the console harness to the steering column with 2 cable ties.

Installing the Control Cover

1. Align the holes in the control cover to the holes in the switch mount (Figure 40).

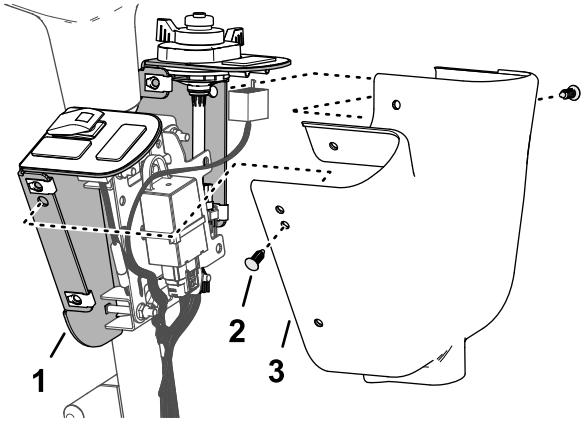

g350789

Figure 40

1. Switch mount
2. Push-in fastener
3. Control cover

2. Using the middle holes, secure the cover to the mount with 2 push-in fasteners as shown in Figure 40.

3. Secure the cover to the mount with 4 flange-heads screws (1/4 x 3/4) as shown in Figure 41.

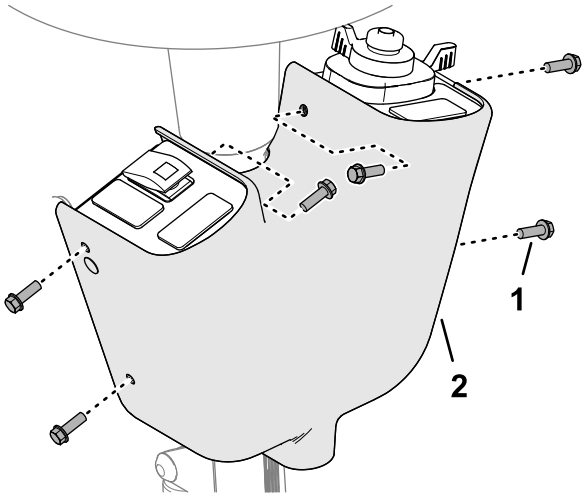

g350771

Figure 41

1. Flange-heads screw (1/4 x 3/4 inch)
2. Control cover

9

Installing the Decal and Fuse

Parts needed for this procedure:

1	Fuse (2 A)
1	Fuse decal

Procedure

1. Insert the fuse (2 A) into the open fuse block slot that corresponds to the connector use when plugging in the connector from the module (Figure 19 and Figure 42).

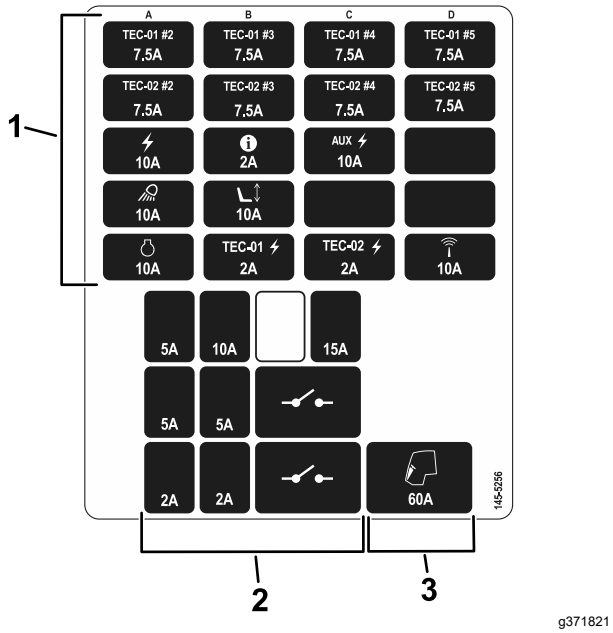

g371821

Figure 42

1. Fuse block fuses
2. Module fuses
3. Fuse clip fuse

2. Install the fuse-box decal to the storage-box cover (Figure 43).

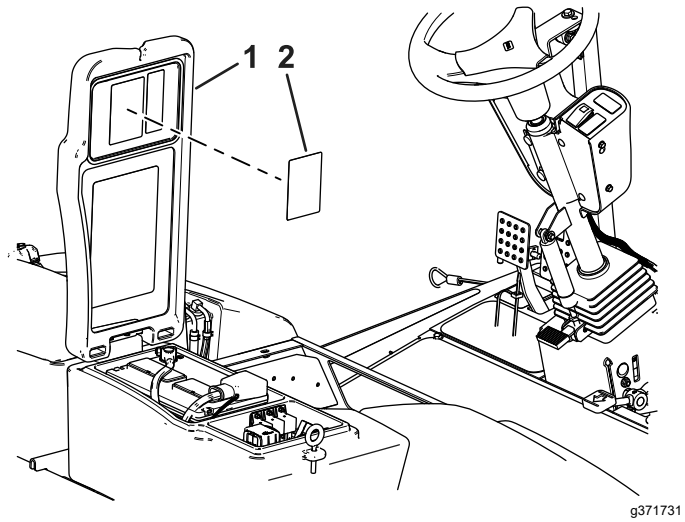

g371731

Figure 43

1. Storage-box cover
2. Fuse-box decal

10

Installing the Decal-Mounting Plates

Parts needed for this procedure:

2	Plate
4	Decal
4	Hex-head screw (1/4 x 2-1/2 inches)
4	Locknut (1/4 inch)

Procedure

1. Align the plates with the existing holes in the light-kit brackets (Figure 44).

   Note: Ensure the screws do not damage the wire harness when installing them into the brackets.

2. Secure the plates to the light-kit brackets with the 4 hex-head screws (1/4 x 2-1/2 inches) and 4 locknuts (1/4 inch) as shown in Figure 44.
3. Apply the decals to the outward-facing surface of the plates (Figure 44).

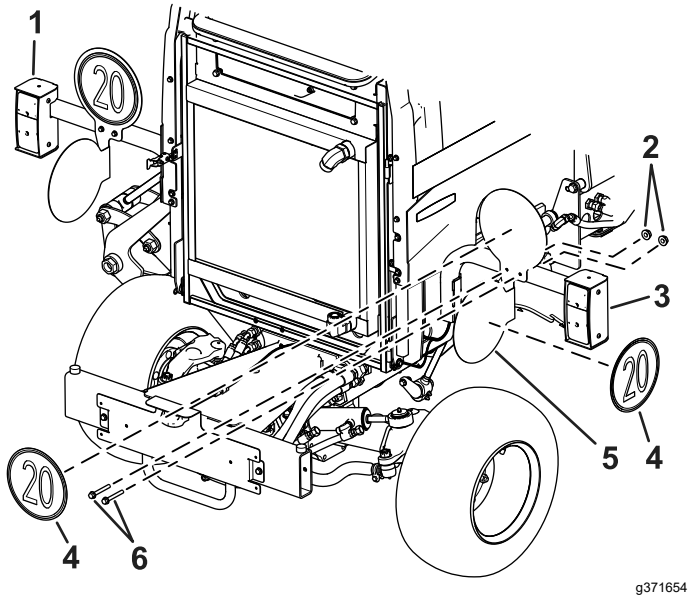

g371654

Figure 44

1. Left rear light
2. Locknuts (1/4 inch)
3. Right rear light
4. Decal
5. Plate
6. Hex-head screws (1/4 x 2-1/2 inches)

11

Connecting the Battery

No Parts Required

Procedure

Connect the battery; refer to your machine *Operator's Manual*.

Operation

Controls

Note: Check the operation of the lights. Make sure that the correct lights are flashing when operating the turn signal switch.

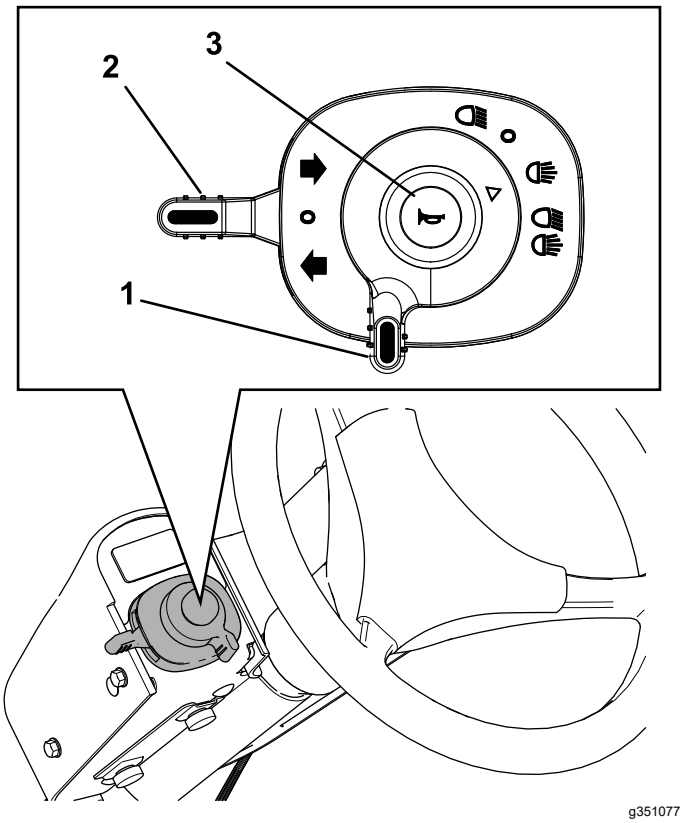

Figure 45

1. Light switch
2. Turn signal switch
3. Horn button

Using the Lights

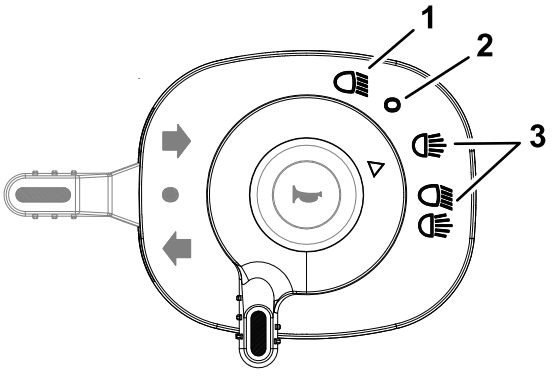

Figure 46

1. Low beam
2. OFF position
3. Low beam

Note: The brake lights will come on when the machine is slowing down from the hydrostatic-dynamic braking or when the brakes pedals are pressed.

1. Turn the key switch.
2. Rotate the light switch (Figure 45 and Figure 46) to the following positions:
   - Low beam
   - OFF position
   - Low beam

Using the Turn Signal

- Move the turn signal switch (Figure 45) up to signal a right turn.
- Move the switch down to signal a left turn.
- Move the switch to the middle position to shut off the turn signals.

Using the Horn

Press the horn button (Figure 45) to sound the horn.

Using the Hazard Lights

The hazard lights are the flashing lights that warn the machine is stationary or moving slow.

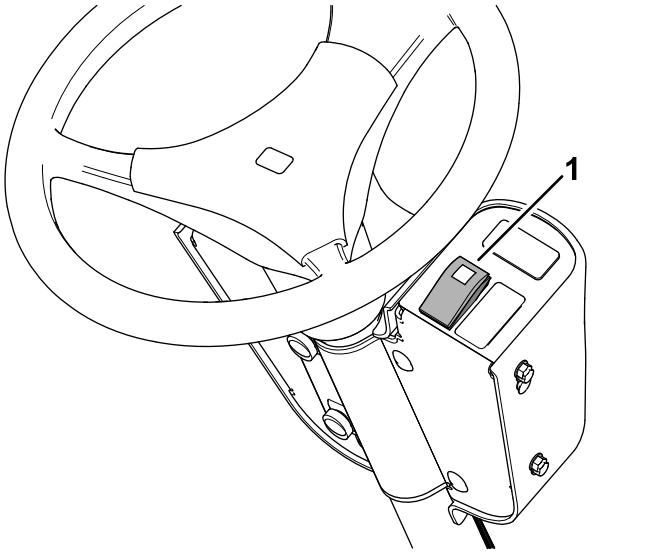

Figure 47

1. Hazard switch

- Press the top of the switch (Figure 47) to run the hazard lights.

  Note: The hazard switch illuminates when running the hazard lights.
- Press the bottom of the switch to shut off the hazard lights.

Adjusting the Headlights

1. Loosen the mounting locknuts and capscrews to adjust the lights (Figure 48).

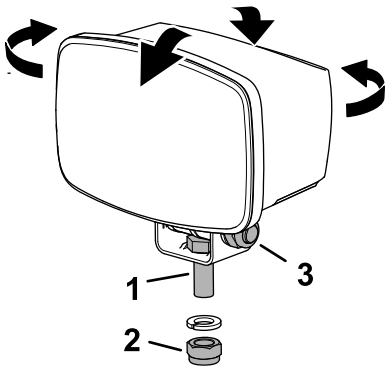

Figure 48

1. Capscrew (horizontal light adjustment)
2. Locknut (horizontal light adjustment)
3. Locknut and capscrew (vertical light adjustment)

2. Adjust the lights per local standards.
3. Tighten the locknuts and capscrews (Figure 48).

Maintenance

Servicing the Fuses

1. Park the machine on a level surface, engage the parking brake, lower the cutting units, shut off the engine, and remove the key.
2. Loosen the latch for the cover of the right storage box and raise the cover (Figure 49).

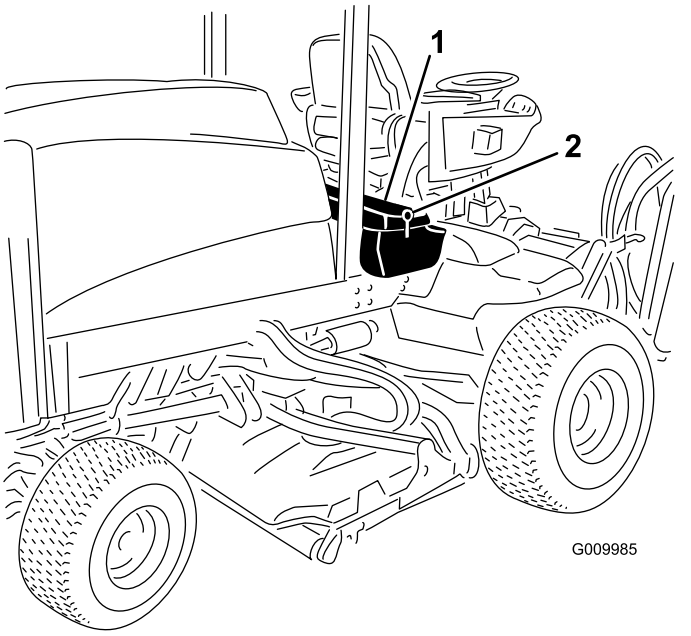

Figure 49

3. Remove the cap from the module (Figure 19).

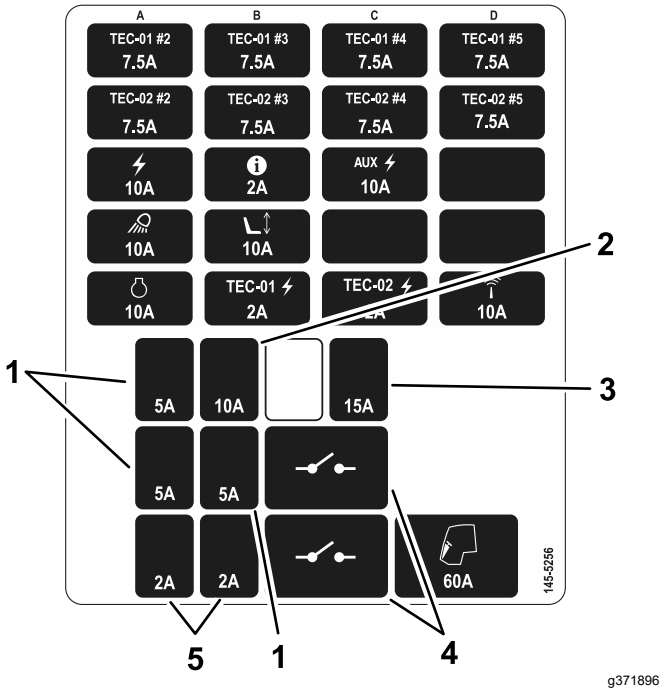

Figure 50

1. Left brake, right brake or harzards
2. Lights
3. Horn
4. Main or horn relay
5. Left or right tail light

4. Replace the fuse; refer to the decal for module fuse locations (Figure 50).
5. Install the cap onto the module.
6. Close and latch the hood.

Notes:

Notes:



Count on it.