Form No. 3327–791

Hose Kit
Versa Vac
Model No. 07080

Installation Instructions

1. Position the machine on a level surface. Lower the attachment, turn the ignition off, and remove the key. Chock wheels.

Caution

If you leave the key in the ignition switch, someone could accidently start the engine and seriously injure you or other bystanders.

Remove the key from the ignition switch before you do any maintenance.

2. On right front corner of trailer, remove (10) screws, washers and nuts securing right side wall to front panel (Fig. 1).

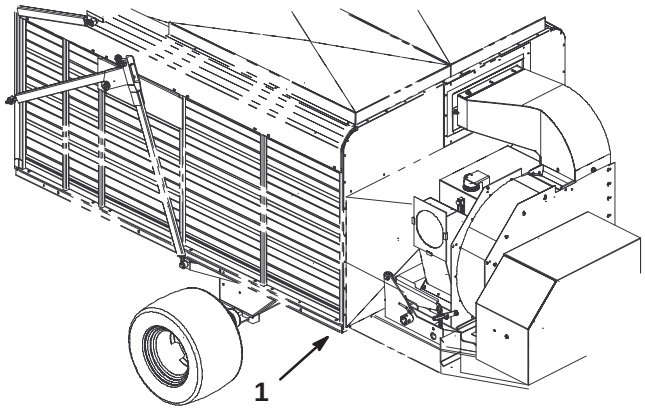

Figure 1

1. Right front corner of trailer

3. Position narrow hose holder onto corner of trailer while aligning holes (Fig. 2).

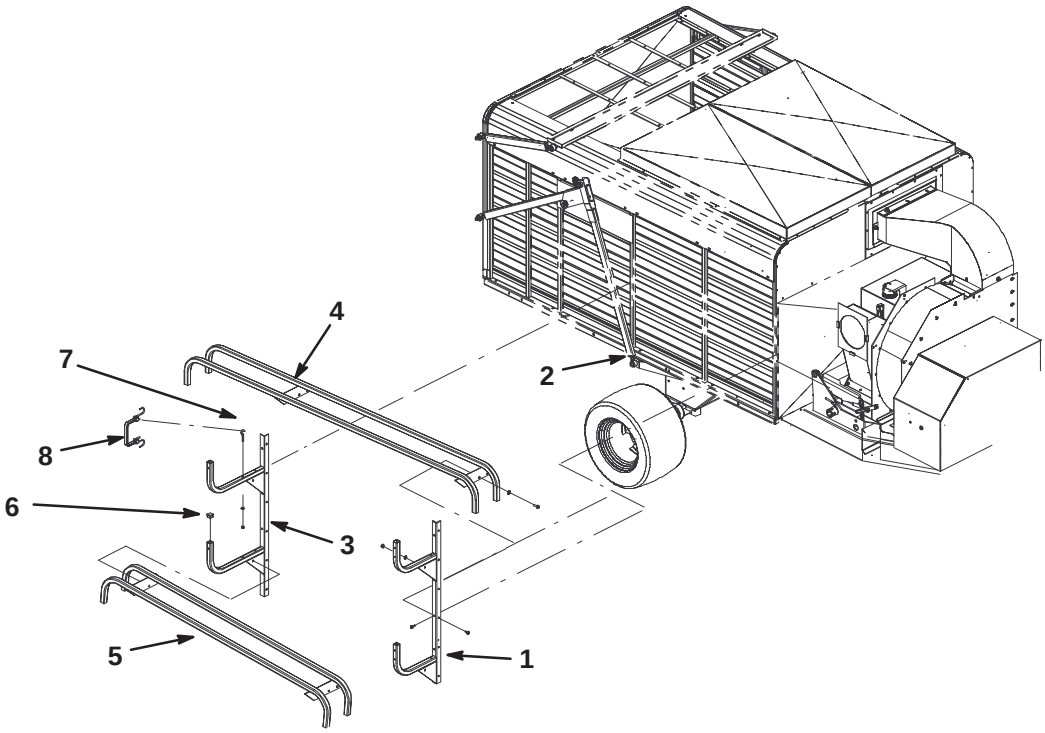

Figure 2

1. Hose holder (narrow)
2. Rib
3. Hose holder (wide)
4. Hose cradle (long)
5. Hose cradle (short)
6. Cap plug
7. Eye bolt
8. Rubber strap

© 2002 by The Toro Company
8111 Lyndale Avenue South
Bloomington, MN 55420-1196

All Rights Reserved
Printed in the USA

4. Loosely secure hose holder to panels with (10) self drilling screws.

5. Position wide hose holder onto side panel rib located above axle (third rib from the front). Hose holder to be at the same height as narrow (front) hose holder (Fig. 2).

6. Loosely secure hose holder to rib with (10) self drilling screws.

7. While aligning mounting holes, position long hose cradle onto top hose hooks of hose holders (Fig. 2). Long end of cradle to be positioned to rear.

8. Secure hose cradle to hose hooks with (2) screws, (4) flat washers and (4) lock nuts (Fig. 2).

9. While aligning mounting holes, position short hose cradle onto bottom hose hooks of hose holders (Fig. 2).

10. Secure hose cradle to hose hooks with (2) screws, (4) flat washers and (4) lock nuts (Fig. 2).

11. Insert a cap plug into end of each hose hook tube (Fig. 2).

12. Mount an eye bolt to each rear hose hook with a washer and lock nut (Fig. 2).

13. Remove (2) capscrews and nuts securing right end of front brace to inside of front panel (Fig. 3).

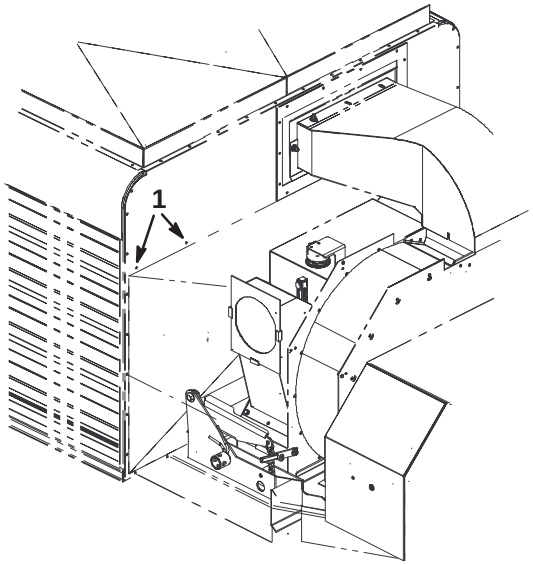

Figure 3

1. Remove these capscrews & nuts

14. Mount hanger to front panel and brace with the (2) capscrews and nuts removed. Position hanger as shown in figure 4.

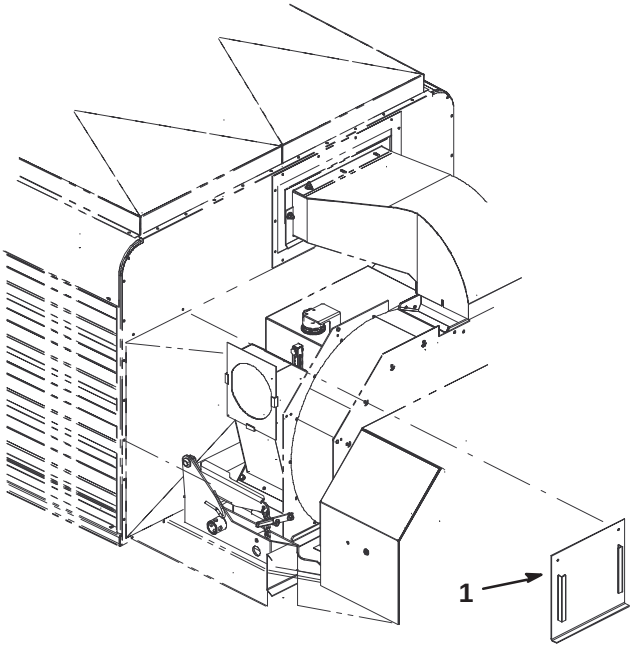

Figure 4

1. Hanger

15. Slide a handle cover onto each handle of hose adapter (Fig. 5).

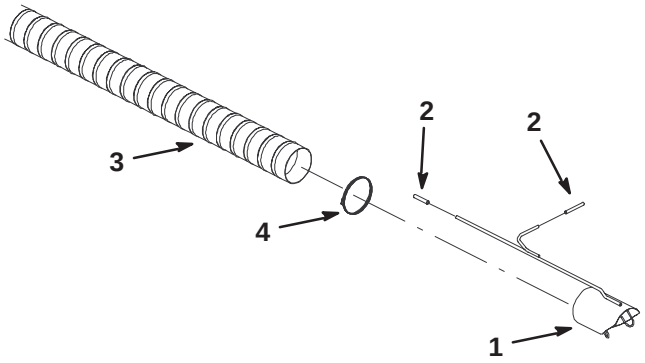

Figure 5

1. Hose adapter
2. Handle cover
3. Vac hose
4. Hose clamp

16. Mount end of hose to hose adapter with a hose clamp (Fig. 5).

17. Mount other end of hose to hose adapter plate with a hose clamp (Fig. 6).

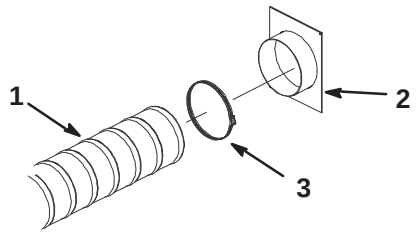

Figure 6

1. Vac hose
2. Hose adapter plate
3. Hose clamp

---

18. Remove vacuum chute door from vacuum chute (Fig. 7)

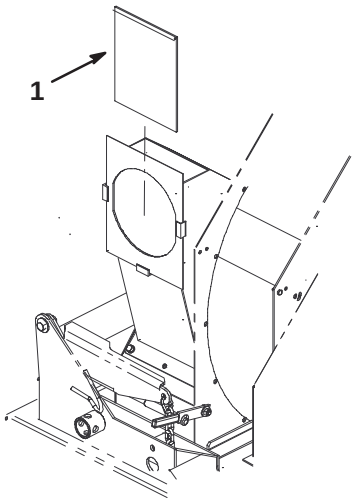

Figure 7

1. Vacuum chute door

---

19. Slide vacuum chute door into door hanger for storage (Fig. 8).

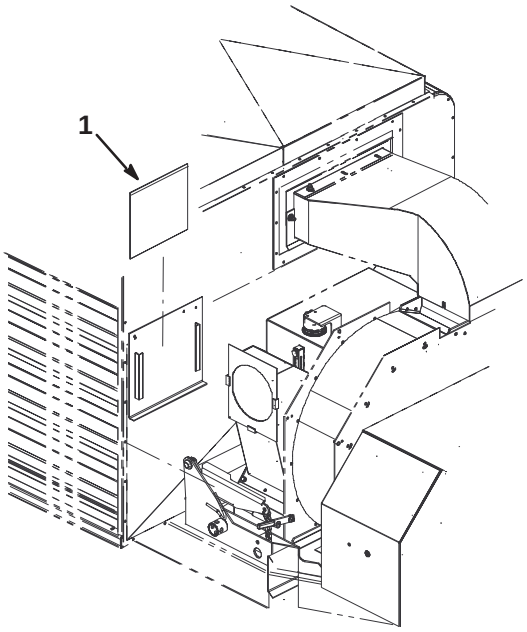

Figure 8

1. Vacuum chute door

---

20. Slide hose adapter plate into place on vacuum chute (Fig. 9).

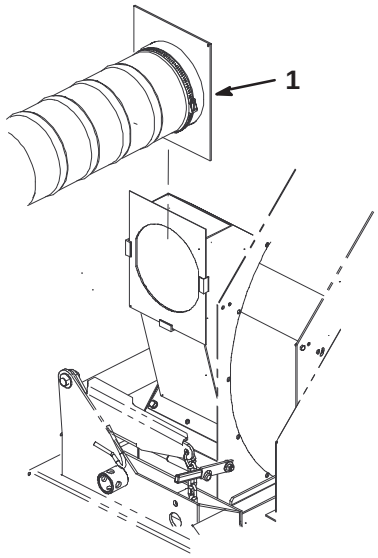

Figure 9

1. Hose

Operation

Warning

Do not place your hand or arm in the vacuum chute; keep the hose door or hose installed at all times.

- **Rotating fan can cut or amputate hand or arm if inserted into vacuum chute.**

- Start the tractor and run it at a low RPM.
- Engage the PTO while the engine is at idle speed.
- Increase the PTO speed to 540 RPM.
- Rotate door latch upward (Fig. 10).
- Rotate door handle rearward to open vacuum chute (Fig. 10).

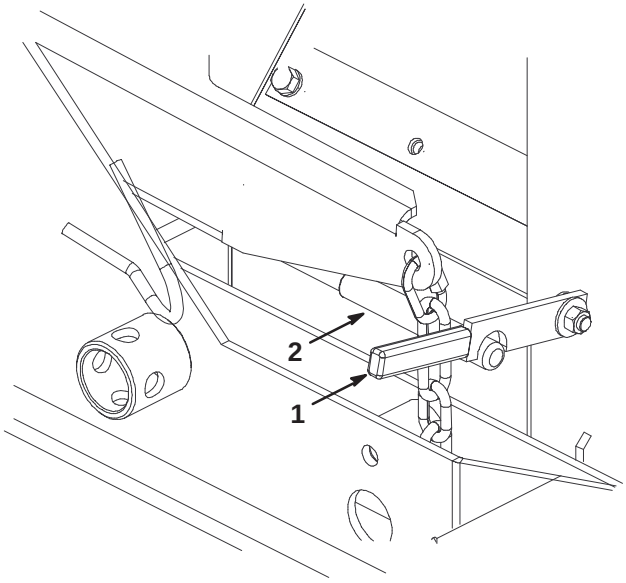

Figure 10

1. Door latch
2. Door handle

- When done operating hose vac, disengage PTO, stop engine and rotate door handle forward to close vacuum chute (Fig. 10).

Storage

- Remove vacuum chute door from door hanger (Fig. 8).
- Remove hose adapter plate from vacuum chute (Fig. 9).
- Slide hose adapter plate into door hanger for storage.
- Install vacuum chute door into door hanger for storage.
- Route hose onto top hose cradle, then down onto bottom hose cradle.
- Secure hose to eyebolts and holes in hose hooks with (4) rubber straps.