FORM NO. 3318–745 Rev. A

TORO®

MODEL NO. 04550

INSTALLATION INSTRUCTIONS

# 3–WHEEL DRIVE KIT
## GREENSMASTER® 3200/3200D

**⚠ CAUTION**

**Before servicing or making adjustments to the machine, stop engine and remove key from the switch.**

**1.** Remove (3) capscrews and flat washers securing fuel tank base plate to frame. Two are located on top of plate at front corners of tank. The third is accessed below plate, in front of caster fork.

**2.** To gain access to top of castor fork shaft, tilt tank base upward by lifting at rear of machine. Securely prop plate up.

**3.** Remove cotter pin and steering fork slotted nut.

**4.** Remove (2) jam nuts securing steering cylinder rod end to steering fork.

**5.** Lift rear of traction unit and remove castor fork assembly.

**6.** Remove tire assembly from castor fork.

**7.** Remove wheel hub assembly from tire assembly. Retain lug nuts.

**8.** Remove grease fitting from motor and hub assembly (Fig. 1).

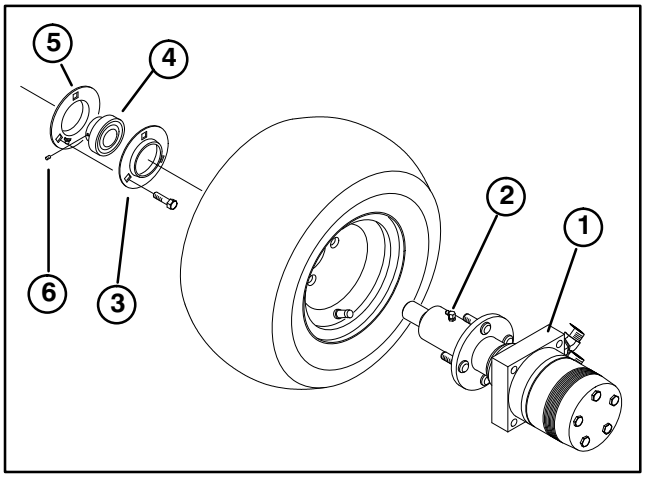


**Figure 1**

1. Motor and hub assembly
2. Grease fitting
3. Standard flangette
4. Bearing
5. Relube flangette
6. Setscrew

**9.** Mount tire assembly to motor and hub assembly with (4) lug nuts. Torque lug nuts to 45–55 ft–lbs.

**10.** Re–install grease fitting in hub assembly, pointing away from tire.

**11.** Insert flangettes and bearing onto end of motor shaft as shown in figure 1.

**12.** Position motor hub, flangettes w/bearing and tire assembly into castor fork. Ports on motor to face to rear.

**13.** Loosely secure motor to left, inside of castor fork with (2) socket head capscrews and (2) nuts.

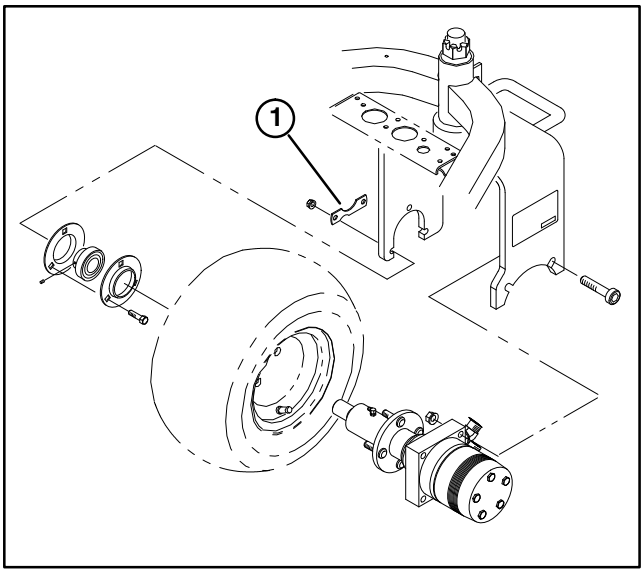


**Figure 2**

1. Bearing tab

**14.** Loosely secure flangettes w/bearing to right inside of castor fork with (3) capscrews, locknuts, and a bearing tab. Grease fitting must be in downward position on flangette. Tighten motor capscrews to 85 ft–lbs and flangette capscrews to 30 ft–lbs..

**15.** Apply loctite (not supplied) to bearing setscrews and torque to 80–100 in–lbs.

**16.** Insert castor fork into traction unit frame. Be sure to use (2) steering washers below and (1) washer above frame bearings.

**17.** Install slotted nut and tighten until a slight drag is felt while rotating castor fork. Back–off nut to align slots and install cotter pin.

**18.** Verify overrunning bearing operation: tire should roll freely forward, but engage the wheel motor when rolled backwards.

**19.** Lower rear of traction unit to ground.

**20.** Lower tank base and re–secure with (3) capscrews and flat washers.

© The TORO Company – 1996

TPS

**21.** Secure cylinder rod end to castor fork with (2) jam nuts. Torque each nut to 65−85 ft−lbs.

**22.** Using dimensions shown in figure 3, locate, mark and drill (4) .281 holes into R.H. frame tube.

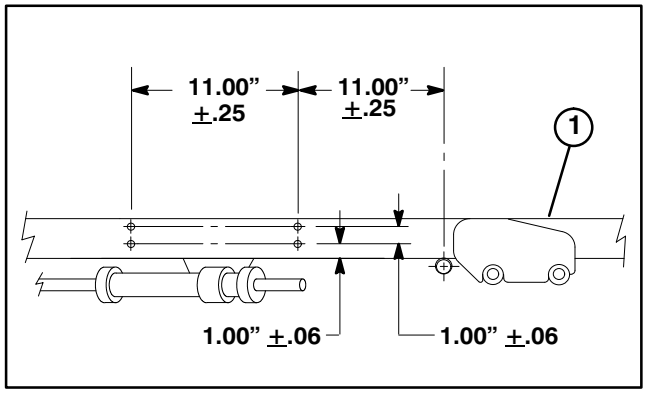


**Figure 3**
1. R.H. Frame tube

**23.** Secure hose clamp brackets to frame as shown in figure 4 with (4) self tapping screws.

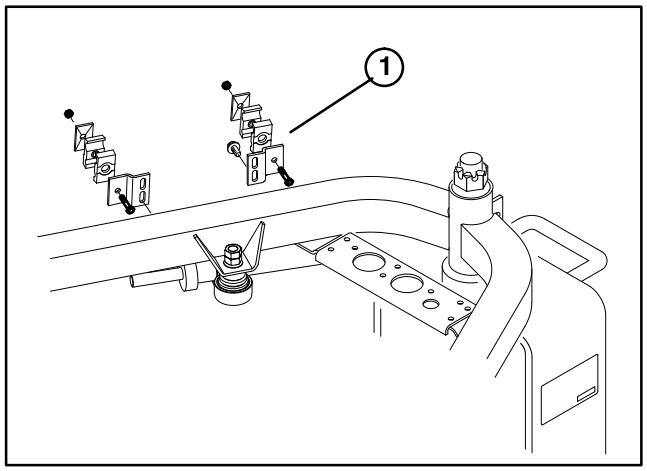


**Figure 4**
1. Hose clamp bracket

**24.** Disconnect upper hydrostat pressure hose from hydrostat and hydraulic tube. Remove and discard.

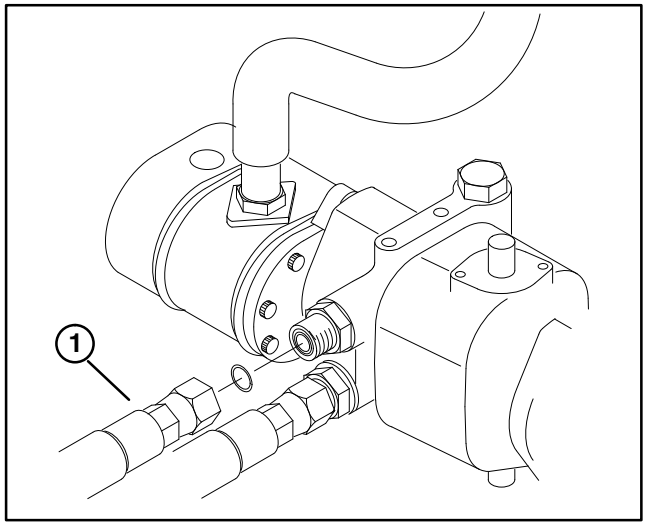


**Figure 5**
1. Hydrostat pressure hose (upper)

**25.** Connect 90 degree fitting end of new hose to hydrostat. Route hose through lower position in hose clamps, behind castor fork, to upper port of rear wheel motor.

**26.** Connect other new hydraulic hose (straight ends) to open hydraulic tube. Route hose through the upper position in hose clamps, behind castor fork, to lower port in rear wheel motor.

**27.** Secure hose ends to fittings.

**28.** Turn steering fork fully side to side to check for proper hose flex and position. Hoses should not rub on tanks, steering fork, or steering hoses. Note that the hose clamp brackets are slotted vertically to allow for adjustment. Secure hoses in brackets.

**29.** Grease all fittings with No. 2 General Purpose Lithium Based grease.

## INSTALL SEAT BELTS

**1.** Install each end of seat belt to holes in back of seat with a 7/16 −20 x 1" lg. capscrews and 7/16 lockwashers. Tighten securely. Latch side of belt to be mounted to left side of seat.

**NOTE:** When operating machine, always use the seat belt and ROPS together.

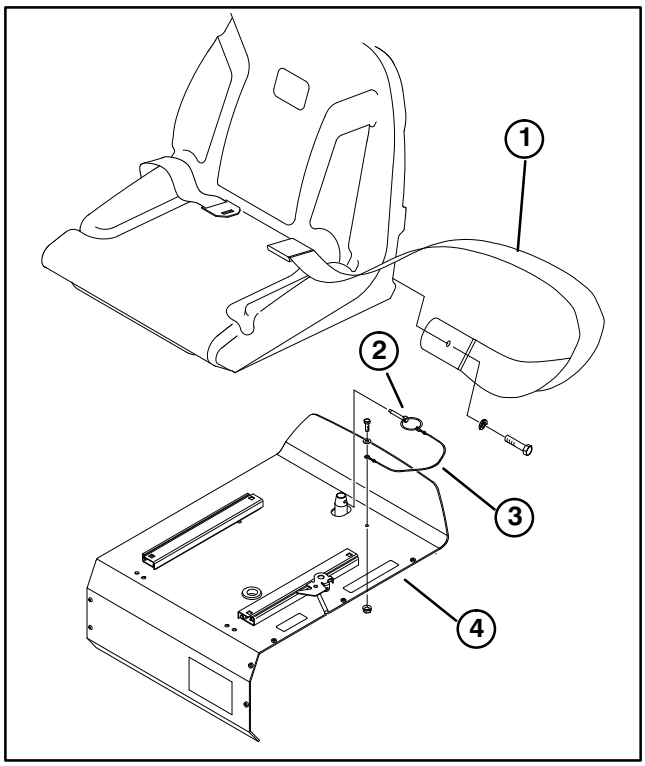


**Figure 6**
1. Seat belt
2. Lynch pin
3. Lanyard
4. Seat support

**2.** Remove lynch pin securing seat support to seat pin.

**3.** Secure new lynch pin lanyard to seat support with a capscrew, flat washer and locknut.

**Note:** If mounting hole in seat support is not supplied, drill a .25” dia. hole 3” left of seat pin.

**4.** Install lynch pin into seat pin securing seat support.

## INSTALL ROPS

**1.** Lower ROPS frame onto mounting brackets, aligning mounting holes as shown in figure 2.

**Note:** To allow installation of ROPS mounting nut on right side of machine, double clamp holding steering cylinder hoses next to ROPS support must be rotated 180°.

**2.** Secure each side of roll bar to mounting brackets with (2) 5/8−11 x 4−1/2” lg. capscrews and locknuts. Torque fasteners to 135−165 in−lbs.

**NOTE:** When operating machine, always use the seat belt and ROPS together.

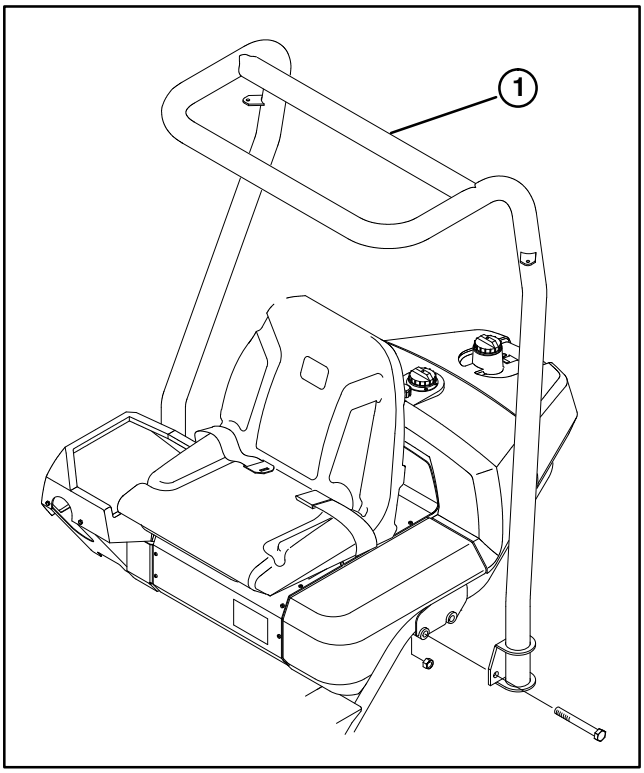


**Figure 7**
**1. ROPS**


TORO®