TORO

Operator's Manual

Greensmaster® eFlex® 1021 Greensmower

Model—Serial Range

04861—414000000 and Up

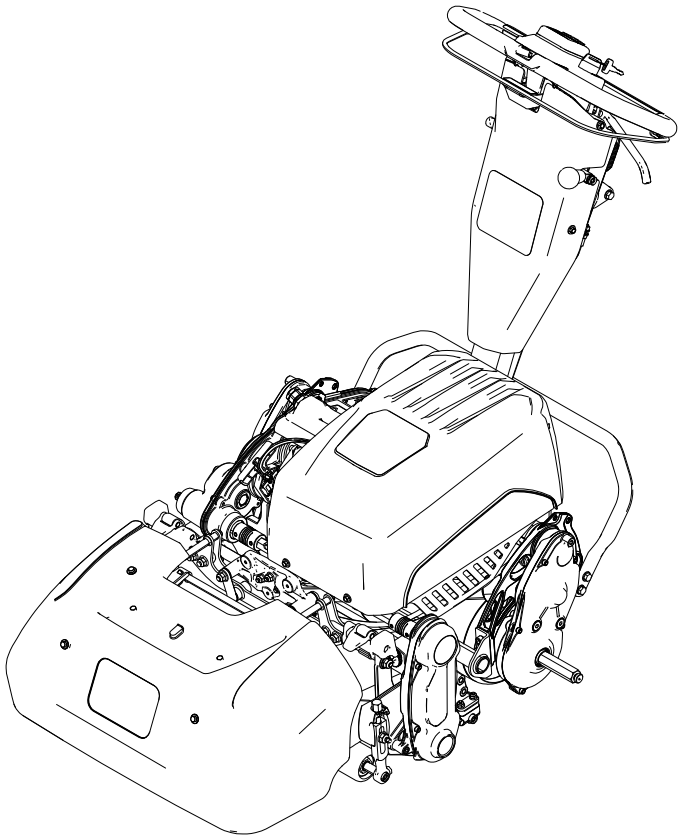

3460-892A

Original Instructions (EN)

3460-892 A

Disclaimers and Regulatory Information

This product complies with all relevant European directives; for details, please see the separate product specific Declaration of Conformity (DOC) sheet.

⚠ WARNING

CALIFORNIA
Proposition 65

The power cord on this product contains lead, a chemical known to the State of California to cause birth defects or other reproductive harm. Wash hands after handling.

Battery posts, terminals, and related accessories contain lead and lead compounds, chemicals known to the State of California to cause cancer and reproductive harm. Wash hands after handling.

Use of this product may cause exposure to chemicals known to the State of California to cause cancer, birth defects, or other reproductive harm.

Table of Contents

Disclaimers and Regulatory Information 2
Chapter 1: Introduction 1–1
- Intended Use 1–1
- Getting Help 1–1
- Manual Conventions 1–2

Chapter 2: Safety 2–1
- General Safety 2–1
- Safety and Instructional Decals 2–1

Chapter 3: Setup 3–1
- Adjusting and Installing the Cutting Unit 3–1
- Installing the Transport Wheels 3–1
- Installing the Grass Basket 3–2
- Adjusting the Latch Bolt for the Handle-Height Adjuster 3–3
- Mounting the Battery Charger 3–4

Chapter 4: Product Overview 4–1
- Controls 4–2
  - InfoCenter Menu Items 4–6
- Specifications 4–10
- Attachments/Accessories 4–11

Chapter 5: Operation 5–1
- Before Operation 5–1
  - Before Operation Safety 5–1
  - Performing Daily Maintenance 5–1
  - Adjusting the Clip Rate 5–2
- During Operation 5–2
  - During Operation Safety 5–2
  - Starting the Machine 5–4

© 2023—The Toro® Company

8111 Lyndale Ave So
Bloomington, MN 55044

Contact us at www.Toro.com
Printed in the USA

All rights reserved

Mowing Overview 5–4
Mowing Tips 5–4
Shutting Off the Machine 5–5
After Operation 5–6
After Operation Safety 5–6
Operating the Machine after Mowing 5–6
Disengaging the Transmission 5–6
Transporting the Machine 5–7
Installing the Transport Wheels 5–7
Transporting the Machine Using Transport Wheels 5–7
Removing the Transport Wheels 5–7
Hauling the Machine 5–8
Battery Operation 5–8
Battery and Charger Safety 5–8
Transporting the Lithium-Ion Battery 5–10
Caring for the Lithium-Ion Battery 5–10
Using the Lithium-Ion Battery Charger 5–12
Chapter 6: Maintenance 6–1
Maintenance Safety 2
Recommended Maintenance Schedule 2
Daily Maintenance Checklist 3
Pre-Maintenance Procedures 4
Preparing the Machine for Maintenance 4
Electrical System Maintenance 4
Electrical System Safety 4
Servicing the Lithium-Ion Battery 5
Battery Disposal 5
Maintaining the Battery Charger 5
Replacing Fuses 5
Controls Maintenance 6
Adjusting the Service/Parking Brake 6
Drive System Maintenance 7
Changing the Transmission Fluid 7
Cutting Unit Maintenance 8
Blade Safety 8
Installing the Cutting Unit 8
Removing the Cutting Unit 9
Backlapping Information 10
Cleaning 11
Cleaning the Machine 11
Chapter 7: Storage 7–1
Storage Safety 7–1
Storing the Machine 7–1
Battery Storage Requirements 7–1
Storing the Charger 7–2
Battery Warranty
The Toro Warranty
California Proposition 65 Warning Information

Intended Use

This machine is a walk-behind, reel-blade lawn mower intended to be used by professional, hired operators in commercial applications. It is primarily designed for cutting grass on well-maintained turf. Using this product for purposes other than its intended use could prove dangerous to you and bystanders.

Read this information carefully to learn how to operate and maintain your product properly and to avoid injury and product damage. You are responsible for operating the product properly and safely.

Getting Help

Visit www.Toro.com for product safety and operation training materials, accessory information, help finding a dealer, or to register your product.

Whenever you need service, genuine Toro parts, or additional information, contact an Authorized Service Dealer or Toro Customer Service and have the model and serial numbers of your product ready. These numbers are located on the serial plate on your product (1). Write the numbers in the space provided.

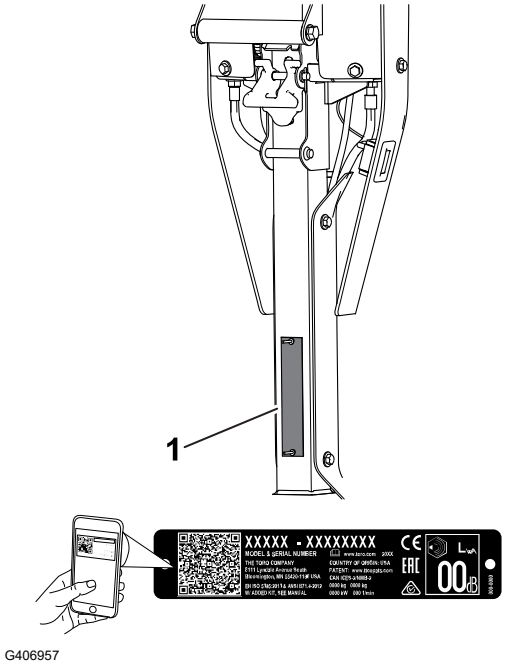

G406957

IMPORTANT

With your mobile device, you can scan the QR code on the serial number decal (if equipped) to access warranty, parts, and other product information.

Model Number:		**Serial Number:**	

Manual Conventions

This manual identifies potential hazards and has safety messages identified by the safety-alert symbol, which signals a hazard that may cause serious injury or death if you do not follow the recommended precautions.



G405934

This manual uses 2 words to highlight information. **Important** calls attention to special mechanical information and **Note** emphasizes general information worthy of special attention.

General Safety

This product is capable of amputating hands and feet and of throwing objects.

- Read and understand the contents of this *Operator's Manual* before starting the machine.
- Use your full attention while operating the machine. Do not engage in any activity that causes distractions; otherwise, injury or property damage may occur.
- Do not put your hands or feet near moving components of the machine.
- Do not operate the machine without all guards and other safety protective devices in place and functioning properly on the machine.
- Keep bystanders and children out of the operating area. Never allow children to operate the machine.
- Shut off the machine, remove the key (if equipped), and wait for all movement to stop before you leave the operator's position. Allow the machine to cool before adjusting, servicing, cleaning, or storing it.

Improperly using or maintaining this machine can result in injury. To reduce the potential for injury, comply with these safety instructions and always pay attention to the safety-alert symbol ⚠, which means Caution, Warning, or Danger—personal safety instruction. Failure to comply with these instructions may result in personal injury or death.

Safety and Instructional Decals

Safety decals and instructions are easily visible to the operator and are located near any area of potential danger. Replace any decal that is damaged or missing.

Decal Part: 120-9570

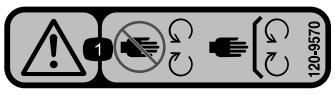

s_decal120-9570

1 Warning—stay away from moving parts, keep all guards and shields in place.

Decal Part: 133-8061



s_decal133-8061

Decal Part: 137-9712

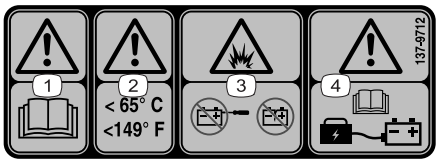

decal137-9712

1 Warning—read the *Operator's Manual*.

2 Warning—keep at temperatures below 65° C (149° F).

3 Explosion hazard—do not open the battery; do not use a damaged battery.

4 Warning—read the *Operator's Manual* for battery charging information.

Decal Part: 138-1644

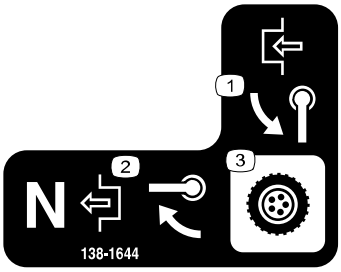

s_decal138-1644

1 Rotate the handle to engage.

2 With the machine in the Neutral position, rotate the handle to disengage.

3 Transmission control

Decal Part: 138-1589

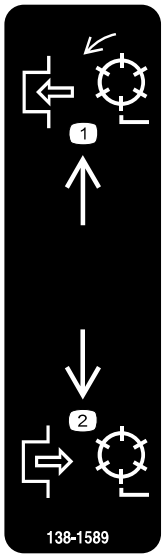

s_decal138-1589

1 Engage the reels.

2 Disengage the reels.

Decal Part: 138-2138

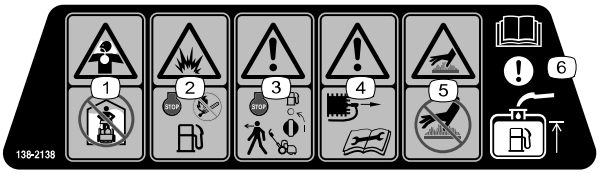

s_decal138-2138

1 Poisonous fumes or toxic gases, asphyxiation hazard—do not run the engine in an enclosed space.

2 Explosion hazard—shut off the engine before adding fuel; no fire, open flames, or smoking when adding fuel.

3 Warning—shut off the engine and close the fuel shutoff valve before leaving the machine.

4 Warning— disconnect the spark plug wire before performing maintenance.

5 Hot surface hazard—do not touch the hot surface.

6 Attention—read the *Operator's Manual* for information about filling the fuel tank.

Decal Part: 138-5532



s_decal138-5532

1 Pull up to release the brake.

2 Pull down to apply the brake.

3 Parking brake—locked

4 Parking brake—unlocked

5 Warning—read the *Operator's Manual*.

6 Warning—do not operate this machine unless you are trained.

7 Warning—wear hearing protection.

8 Thrown object hazard—keep bystanders away.

9 Warning—stay away from moving parts; keep all guards and shields in place.

10 Do not tow the machine.

Decal Part: 138-5533

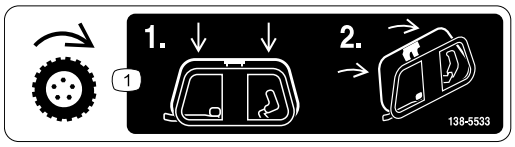

s_decal138-5533

1 Traction control—press the traction control down then pull it to the handle.

Decal Part: 138-5534

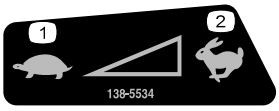

s_decal138-5534

1 Slow

2 Fast

Decal Part: 139-5178

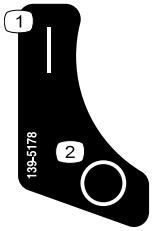

s_decal139-5178

1 On

2 Off

Decal Part: 139-5614

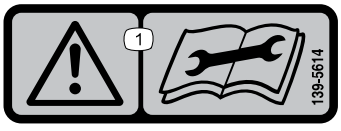

s_decal139-5614

1 Warning—read the *Operator's Manual* before performing maintenance.

Decal Part: 147-2255

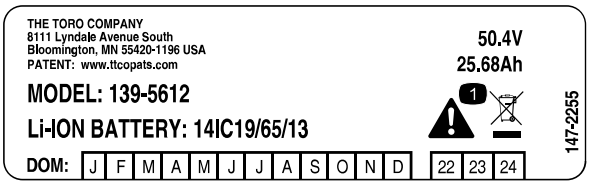

s_decal147-2255

1 Warning—do not discard.

Adjusting and Installing the Cutting Unit

Parts Required

1	Cutting unit (order separately; contact your authorized Toro distributor)
1	Hex tube
1	Spring
1	Collar

1. Adjust the cutting unit to your desired settings; refer to the cutting unit *Operator's Manual*.
2. Install the spring [1], collar [2], and hex tube [3] to the transmission coupler shaft.
3. Install the cutting unit to the machine.

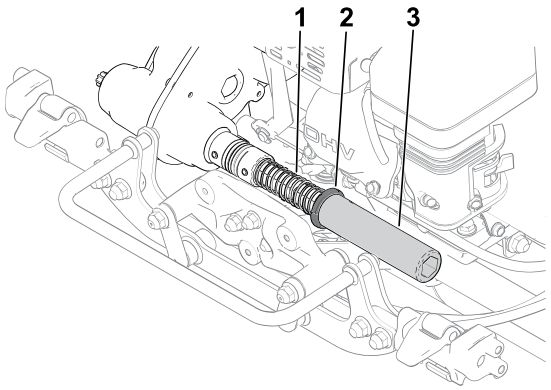

G404684

Installing the Transport Wheels

You can purchase an optional Transport Wheel Kit (Model 04123); contact your authorized Toro distributor.

1. Ensure that the tires are inflated to 83 to 103 kPa (12 to 15 psi).
2. Move the kickstand to the TRANSPORT-WHEEL-SERVICE position.

3. Slide a wheel onto an axle ①.
4. Pivot the wheel-locking clip ② away from center of the wheel, allowing it to slide farther onto the axle.
5. Rotate the wheel back and forth until it slides completely onto the axle and the locking clip is secured in the groove on the axle shaft.
6. Repeat the procedure on the opposite side of the machine.
7. Carefully lower the machine off the kickstand.

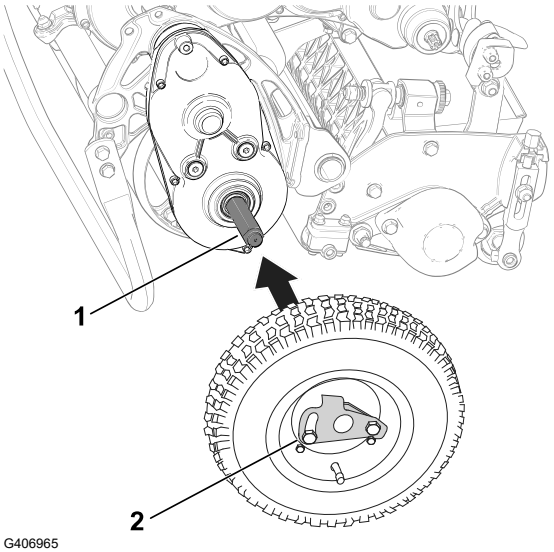

G406965

Installing the Grass Basket

Parts Required

1	Grass basket

IMPORTANT

If you drop the basket, examine the pitch-arm contact points① near the lower lip of the basket for damage. Straighten them before using the basket.

Using the basket with bent pitch-arm contact points may cause contact between the basket and cutting unit, causing undesired noise and/or damage to the basket and cutting unit.

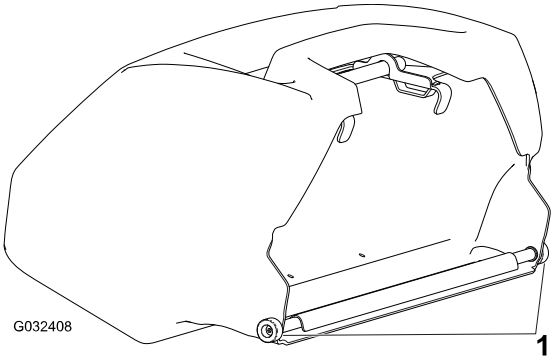

G404688

1. Grasp the basket by the handle.
2. Guide the basket lip between the cutting unit side plates and over the front roller.

3. Install the basket hooks (2) over the frame loop (1).

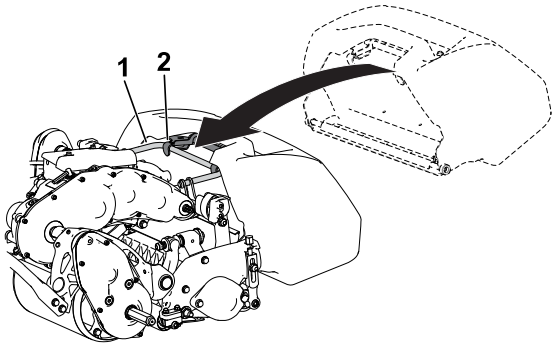

G404689

Adjusting the Latch Bolt for the Handle-Height Adjuster

If the handle-height adjuster is not parallel with the upper receiver weldment, perform the following steps to adjust the bolt:

1. Loosen the nut (1) on the latch bolt (3) so that the bolt head can move freely just beyond the pivot stop (2).

   Note: You can apply pressure to the handle-height-adjuster spring to reduce tension on the bolt.

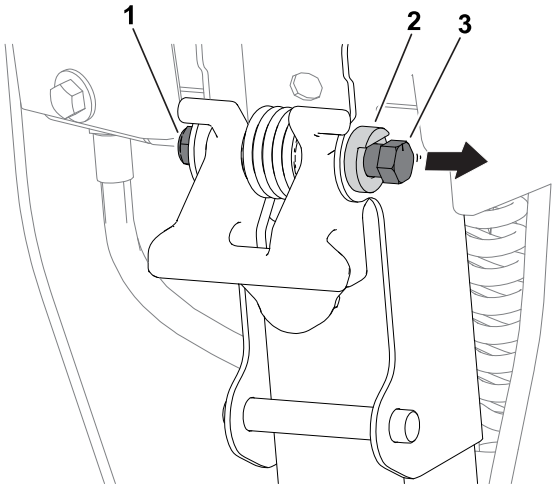

G440770

2. Rotate the bolt clockwise (3) or counter-clockwise (4) to adjust the angle of the handle-height adjuster (2) in or out. The handle-height adjuster should be parallel to the upper receiver weldment (1).
3. Tighten the nut on the latch bolt so that the new bolt position is secured against the pivot stop.

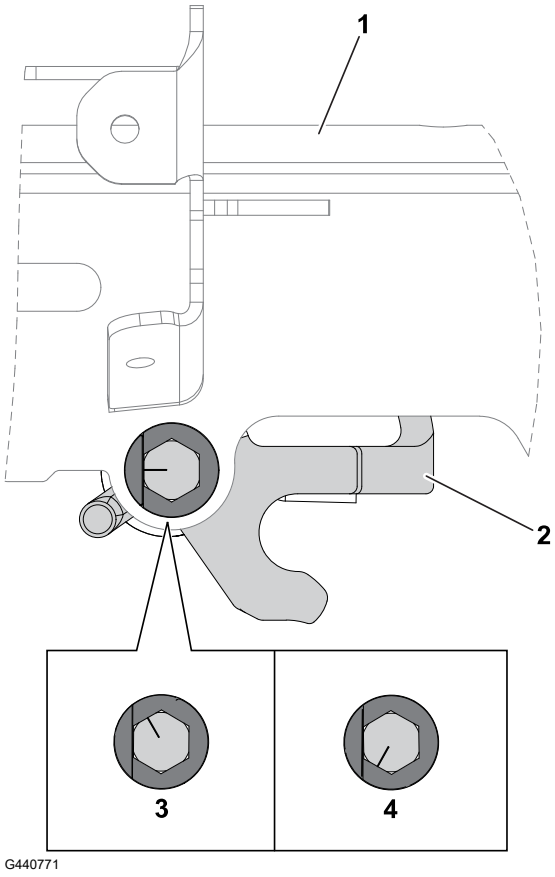

Mounting the Battery Charger

Optional

Parts Required

4	Screw (1/4 inch with a 7/16 diameter head)—Not included

You can mount the charger to a surface using the key holes on the back of the charger; use screws that have a 1/4-inch diameter shaft and a head diameter less than 11 mm (7/16 inch).

IMPORTANT

Survey your work area and determine a location that best meets the criteria for safe and effective operation of the charger.

Chapter 4

Product Overview

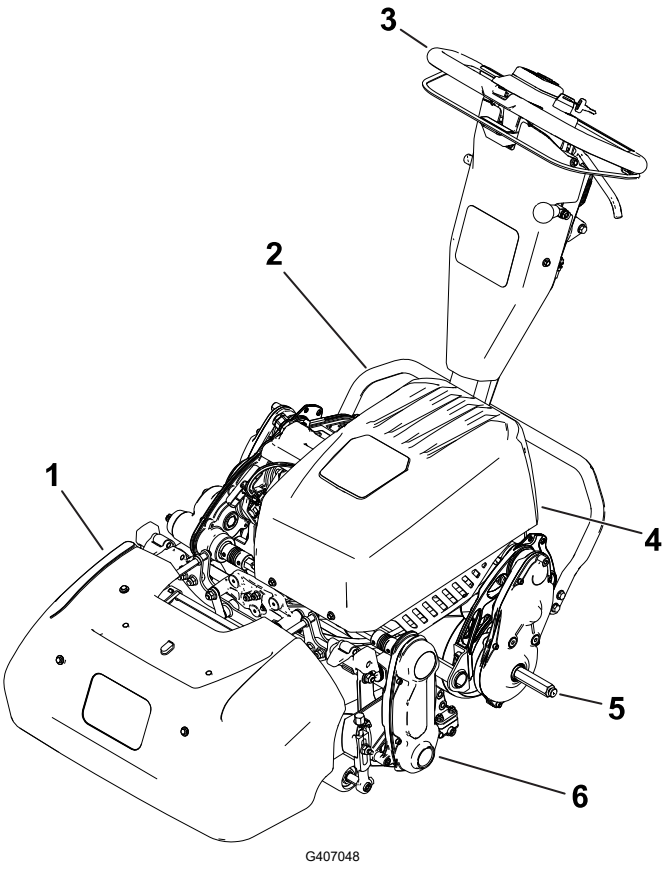

1. Grass basket
2. Kickstand
3. Handle
4. Battery pack
5. Transport-wheel axle
6. Cutting unit

Controls

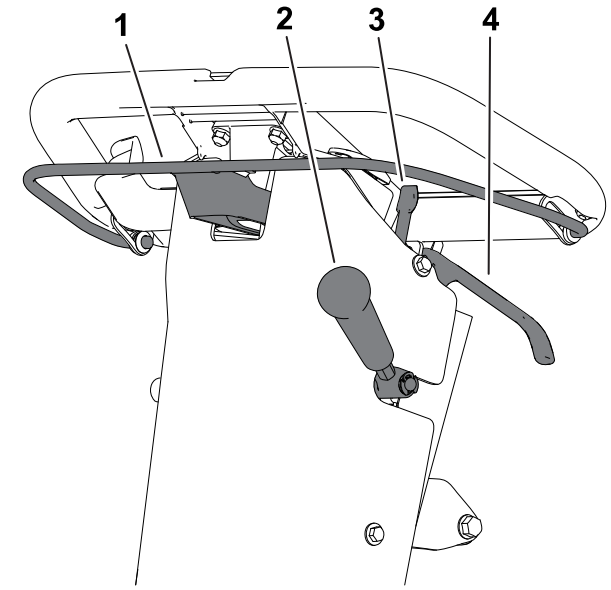

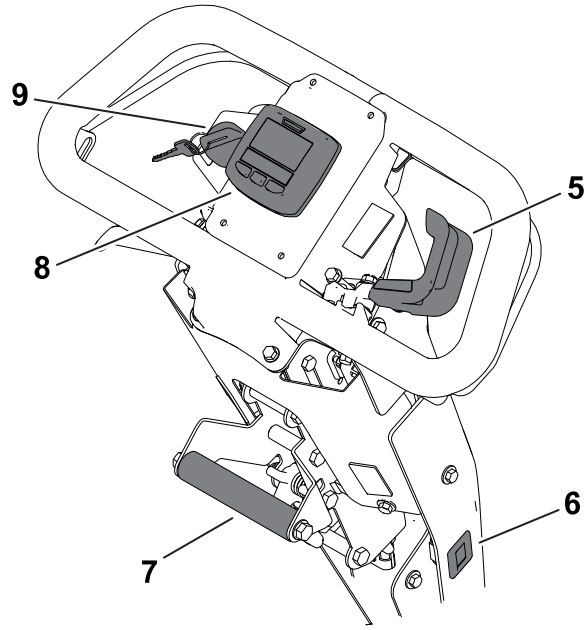

G407032

1. Clutch bail
2. Cutting-unit-drive lever
3. Parking-brake latch
4. Service-brake lever
5. Speed control
6. Hour meter
7. Lift-assist handle
8. InfoCenter
9. Key switch

Clutch Bail

Use the clutch bail to engage or disengage the traction drive.

- **Engage the traction drive** Ⓐ**:** Pull up and hold the bar to the handle.
- **Disengage the traction drive** Ⓑ**:** Release the bar.

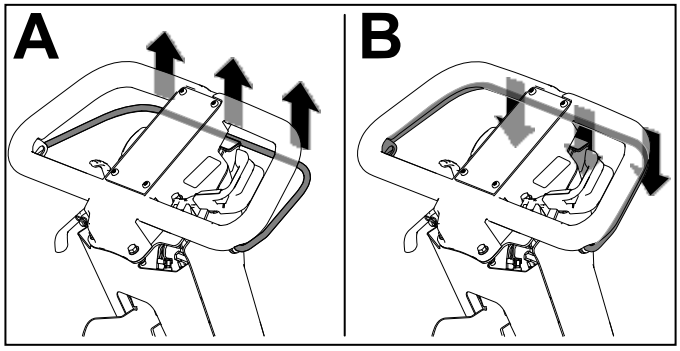

G404693

Speed Control

- **Decrease the motor speed** ①**:** Rotate the lever up.
- **Increase the motor speed** ②**:** Rotate the lever down.

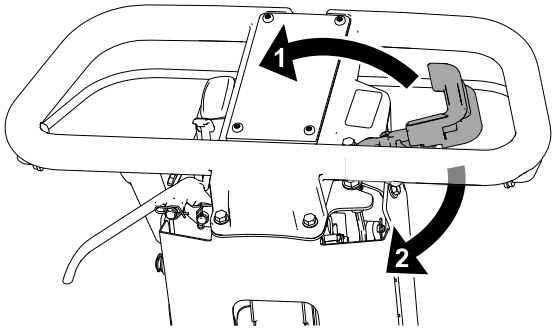

G404708

Reel Speed Control

Use the reel-speed-control knob to engage adjust the reel speed.

- **High reel speed:** Rotate the knob so that the “H” on the knob is directed toward the front of the machine.
- **Low reel speed:** Rotate the knob so that the “L” on the knob is directed toward the front of the machine.

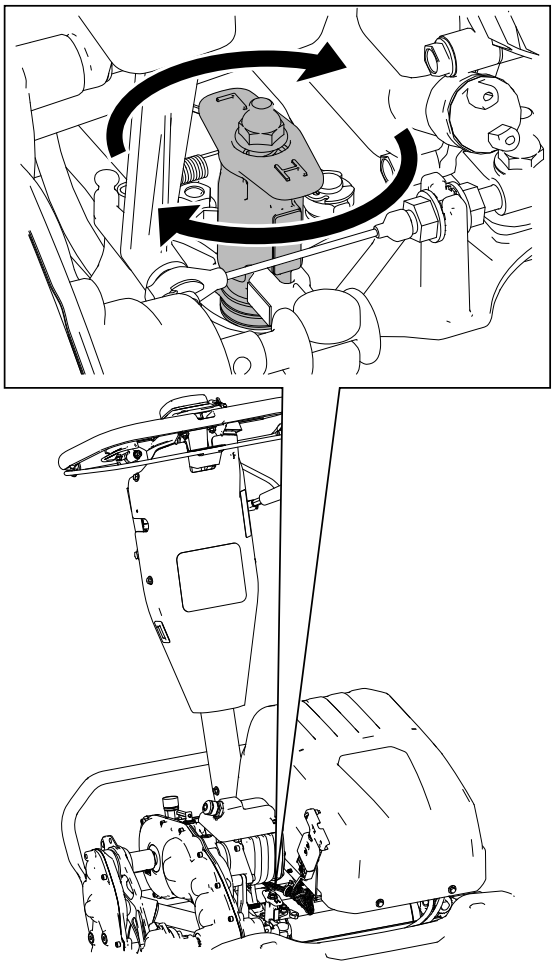

G426885

Key Switch

- **Start the machine:** Move the key to the On position.
- **Shut off the machine:** Move the key to the Off position.

Service-Brake Lever

Pull the service-brake lever toward the handle to slow or stop the machine.

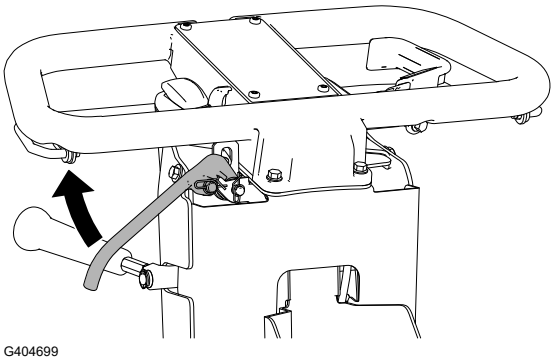

G404699

Parking-Brake Latch

- **Engage the parking brake** ①**:** Rotate the parking-brake latch toward you while the service-brake lever is engaged.
- **Disengage the parking brake** ②**:** Pull the service-brake lever toward the handle.

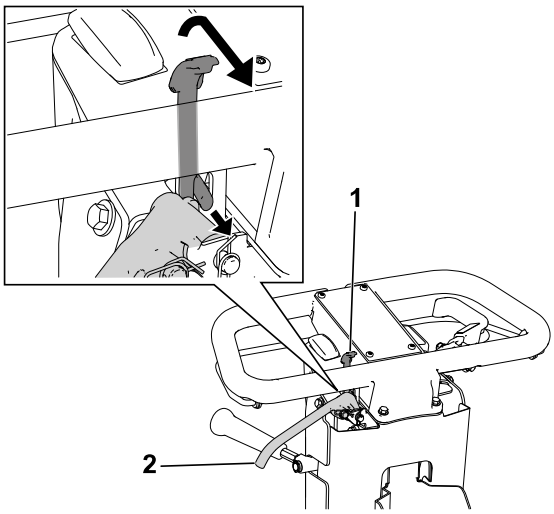

G404700

Cutting-Unit-Drive Lever

Use the cutting-unit-drive lever to engage or disengage the cutting unit while the clutch bail is engaged.

- **Engage the cutting unit** ②**:** Move the lever down.
- **Disengage the cutting unit** ①**:** Move the lever up.

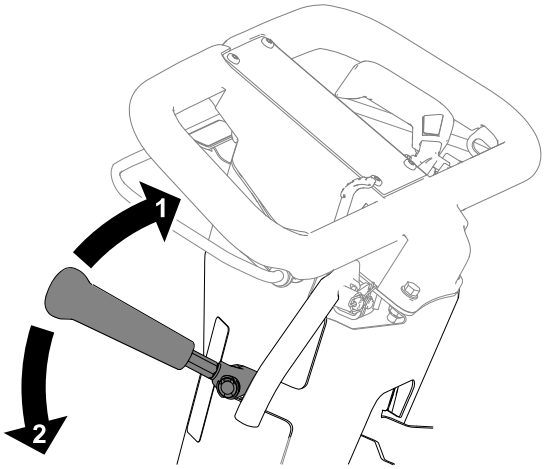

G404701

Hour Meter

The hour meter records the total running time of the engine to assist in scheduling regular maintenance.

InfoCenter LCD Display

The InfoCenter LCD display shows information about your machine such as the current battery charge, the speed, various diagnostics, and other information about the machine and the battery. The following figure illustrates the InfoCenter and the main information screen.

InfoCenter LCD Display (continued)

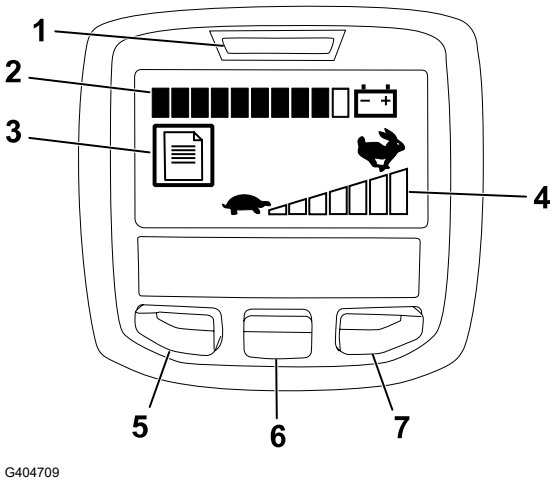

- Power light/fault indicator 1—illuminates when you turn the machine on. This light also blinks when there is a machine fault.
- Battery charge indicator 2—when the battery has a full charge, all of the boxes in the indicator will be filled in with black. As power is used, boxes will be filled with white starting from the right and proceeding to the left as the battery drains. When only 1 box is still black the battery pack is almost out of power; the machine enters a power reduction mode which limits the throttle speed by 25%. You should immediately proceed to charge the battery.
- Fault log indicator 3—this icon indicates that there is a current fault log to review.
- Speed control setting 4—the bars turn black from left to right the faster you set the speed control. When all bars are filled with white, the machine is at zero speed.
- Menu access/back button 5—press this button to access the InfoCenter menus. You can also use it to back out of any menu you are currently using.
- Down button 6—use this button to scroll down menus.
- Right button 7—use this button to open a menu where a right arrow indicated additional content.

Note: The purpose of each button may change depending on what is required at the time. Each button has a label with an icon displaying its current function.

InfoCenter Menu Items

Main Menu

Menu Item	Description
Faults	The Faults menu contains a list of the recent machine faults. Refer to the *Service Manual* or your authorized Toro distributor for more information on the Faults menu.
Service	The Service menu contains information on the machine such as hours of use and battery usage and status.
Diagnos-tics	The Diagnostics menu lists various states that the machine currently has. You can use this to troubleshoot certain issues as it will quickly tell you which machine controls are on and which are off.
Settings	The Settings menu allows you to customize the InfoCenter display.
About	The About menu lists the model number, serial number, and software version of your machine.

InfoCenter LCD Display (continued)

InfoCenter Menu Items (continued)

Service Menu

Menu Item	Description
Hours	Lists the total number of hours that the machine has been turned on.
Mow Time	Lists the total number of hours that the reel has been turned on.
Power Use	Lists the instantaneous power delivered by the battery in Watts.
Battery Charge	Lists the current battery charge as a percent of capacity.
Battery Current	Lists the instantaneous current delivered by the battery in Amps.
Battery Volts	Lists the battery potential in volts.
Total Usage	Lists the total amount of battery usage in amp hours.
Capacity	List the current battery capacity in amp hours.
Charge Cycles	Lists the total amount of battery charge cycles. A charge cycle is defined by the process of connecting and disconnecting the charger.
Battery Hours	Lists the total amount of hours that the battery has been active.
Backlap	Sets the machine in Backlap Mode.
Energy	Lists the total energy delivered by the battery over its entire life in watt-hours.

Diagnostics Menu

Menu Item	Description
Key On	Indicates whether the ignition key is on or off.
Traction	Indicates whether the traction is engaged or disengaged.
Throttle	Indicates the throttle control setting in Volts (used to calculate the target rpm).
Bail	Indicates the bail control settings in volts.
Target rpm	Lists the desired motor rpm as indicated by the speed control setting.
Motor rpm	Lists the actual motor rpm.
12V Supply	Lists the sensor supply voltage #1 of the controller.
5V Supply	Lists the sensor supply voltage #2 of the controller.
CAN Bus	Lists the machine communication bus status.

InfoCenter LCD Display (continued)

InfoCenter Menu Items (continued)

Settings Menu

Menu Item	Description
Language	Use this setting to change the language used on the InfoCenter.
Units	Use this setting to change the units used by the InfoCenter. The menu choices are English and Metric.
LCD Backlight	Use this setting to increase or decrease the brightness of the LCD display.
LCD Contrast	Use this setting to change the contrast between the dark and light areas of the LCD display.

About Menu

Menu Item	Description
Model	Lists the model number of the machine.
SN	Lists the serial number of the machine.
S/W Rev	Lists the revision number of the machine software.

Note: If you inadvertently change the language or contrast to a setting where you can no longer understand or view the display, contact your authorized Toro distributor for assistance in resetting the display.

Handle-Height Adjuster

Pull up on the handle-height adjuster (1) and raise or lower the handle height to a comfortable operating position.

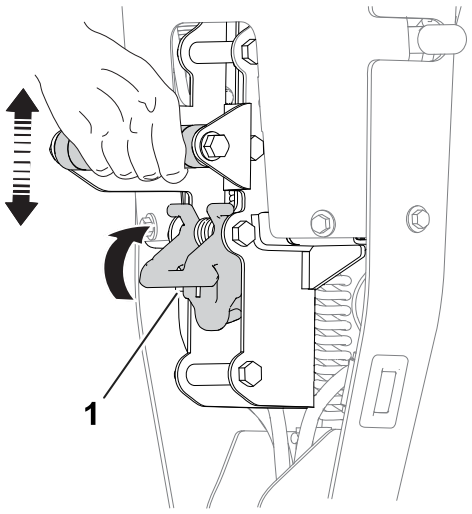

G404702

Kickstand

Use the kickstand when you install or remove the transport wheels or the cutting unit.

Kickstand (continued)

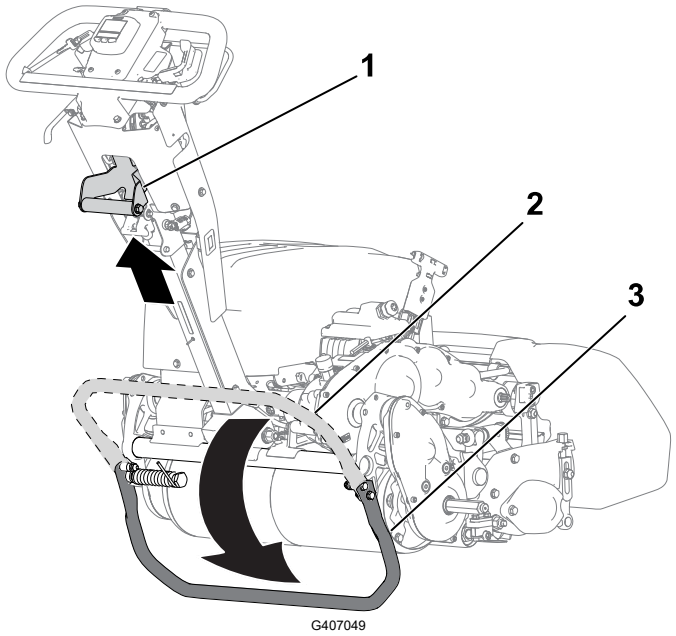

⚠ CAUTION ⚠

The machine is heavy and can cause back strain if lifted improperly.

Put your foot pressure down on the kickstand and use only the lift-assist handle to raise the machine. Attempting to raise the machine onto the kickstand any other way can cause injury.

- **TRANSPORT-WHEEL-SERVICE position ③:**

  To use the kickstand to install the transport wheels, put your foot on the kickstand while pulling up and back on the lift-assist handle ①.

- **STORAGE position ②:**

  1. Keep your foot on the kickstand while lowering the traction drum to the ground.
  2. Remove your foot from the kickstand and allow space for the kickstand to retract to the STORAGE position.

- **CUTTING-UNIT-SERVICE position ①:**

  To prevent the machine from tipping backward when removing the cutting unit, lower the kickstand and push out the spring pin ② so that it keeps the kickstand in position.

Kickstand (continued)

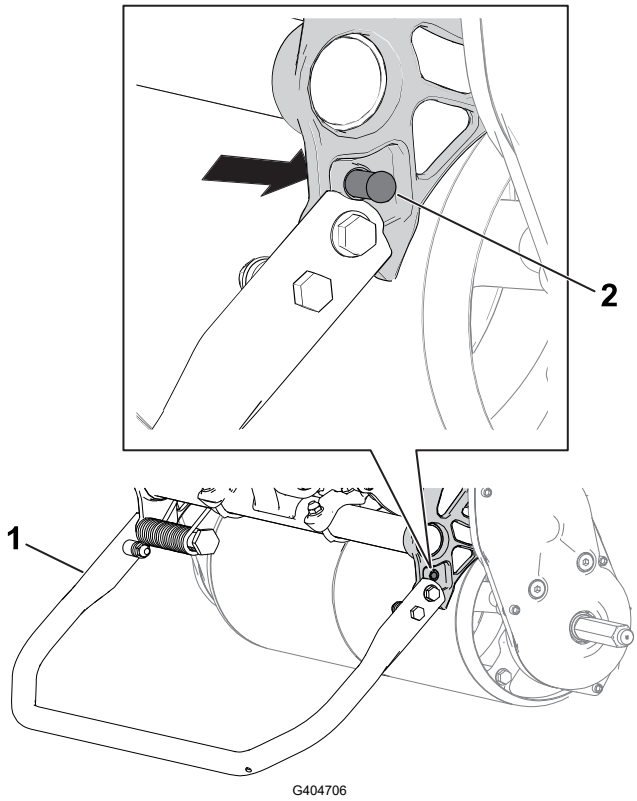

1 Kickstand—Cutting-Unit Service position

2 Spring pin

Specifications

Note: Specifications and design are subject to change without notice.

Width	91 cm (36 inches)
Dry weight*	97 kg (207 lb)
Width of cut	53 cm (21 inches)
Height of cut	Refer to your cutting unit *Operator's Manual*.
Clip	Dependent on reel speed and reel-drive-pulley position.
Mowing speed	3.2 km/h (2 mph) to 5.6 km/h (3.5 mph)
Transport speed	8.5 km/h (5.3 mph)
*Traction unit only. Refer to the cutting unit *Operator's Manual* for the weight of each cutting unit.	

Electrical Specifications

Voltage	48 V
Current	DC (===)

Amp Hours	25.6 AH
IP Rating	IP65

Attachments/Accessories

A selection of Toro approved attachments and accessories is available for use with the machine to enhance and expand its capabilities. Contact your Authorized Service Dealer or authorized Toro distributor or go to www.Toro.com for a list of all approved attachments and accessories.

To ensure optimum performance and continued safety certification of the machine, use only genuine Toro replacement parts and accessories.

Before Operation

Before Operation Safety

General Safety

- Never allow children or untrained people to operate or service the machine. Local regulations may restrict the age of the operator. The owner is responsible for training all operators and mechanics.
- Become familiar with the safe operation of the equipment, operator controls, and safety signs.
- Shut off the machine, remove the key (if equipped), and wait for all movement to stop before you leave the operator's position. Allow the machine to cool before adjusting, servicing, cleaning, or storing it.
- Know how to stop the machine and shut off the machine quickly.
- Check that operator-presence controls, safety switches, and safety protective devices are attached and functioning properly. Do not operate the machine unless they are functioning properly.
- Inspect the area where you will use the machine and remove all objects that the machine could throw.

Performing Daily Maintenance

Before starting the machine each day, perform the Each Use/Daily procedures listed in the Maintenance Schedule.

Adjusting the Clip Rate

1. Determine the appropriate clip rate per the following table:

Clip Rate

Reel Speed	Pulley Position	Cutting Unit		
		8-blade	11-blade	14-blade
Low	Low	7.3 mm (0.286 inch)	5.3 mm (0.208 inch)	4.2 mm (0.164 inch)
Low	High	6.1 mm (0.241 inch)	4.4 mm (0.175 inch)	3.5 mm (0.137 inch)
High	Low	5.9 mm (0.233 inch)	4.3 mm (0.169 inch)	3.4 mm (0.133 inch)
High	High	5.0 mm (0.196 inch)	3.6 mm (0.142 inch)	2.8 mm (0.112 inch)

2. Adjust the reel speed control to the HIGH or LOW setting as needed.
3. Set the reel-drive pulley on the cutting unit to the HIGH or LOW position as needed; refer to your cutting unit *Operator's Manual*.

During Operation

During Operation Safety

General Safety

- The owner/operator can prevent and is responsible for accidents that may cause personal injury or property damage.
- Wear appropriate clothing, including eye protection; long pants; substantial, slip-resistant footwear; and hearing protection. Tie back long hair and do not wear loose clothing or loose jewelry.
- Do not operate the machine while ill, tired, or under the influence of alcohol or drugs.
- Use your full attention while operating the machine. Do not engage in any activity that causes distractions; otherwise, injury or property damage may occur.
- Before you turn on the machine, ensure that all drives are in neutral, the parking brake is engaged, and you are in the operating position.
- Keep bystanders and children out of the operating area. If co-workers must be present, use caution and ensure that the grass basket is installed on the machine.
- Operate the machine only in good visibility to avoid holes or hidden hazards.
- Do not operate the machine when there is the risk of lightning.
- Use care when mowing on wet grass. Poor footing could cause a slip-and-fall accident.
- Keep your hands and feet away from the cutting unit.

During Operation Safety (continued)

- Look behind and down before backing up to be sure of a clear path.
- Use extreme caution when reversing or pulling the machine toward you.
- Use care when approaching blind corners, shrubs, trees, or other objects that may obscure your vision.
- Stop the cutting unit whenever you are not mowing.
- Disengage the drive to the cutting unit and shut off the machine before adjusting the height of cut.
- Never leave a running machine unattended.
- Before you leave the operator's position, do the following:
  - Park the machine on a level surface.
  - Disengage the cutting unit(s).
  - Engage the parking brake.
  - Shut off the machine and remove the key (if equipped).
  - Wait for all movement to stop.
- Shut off the machine before emptying the basket.
- Shut off the machine and disengage the drive to the cutting unit in the following situations:
  - Before charging
  - Before clearing blockages
  - Before removing the grass basket
  - Before checking, cleaning, or maintaining the cutting unit
  - After striking a foreign object or if an abnormal vibration occurs. Inspect the cutting unit for damage and make repairs before starting and operating the machine
  - Before leaving the operating position
- Use only accessories and attachments approved by The Toro® Company.

Slope Safety

- Slopes are a major factor related to loss of control and rollover accidents, which can result in severe injury or death. You are responsible for safe slope operation. Operating the machine on any slope requires extra caution. Before using the machine on a slope, do the following:
  - Review and understand the slope instructions in the manual and on the machine.
  - Evaluate the site conditions of the day to determine if the slope is safe for machine operation. Use common sense and good judgment when performing this evaluation. Changes in the terrain, such as moisture, can quickly affect the operation of the machine on a slope.
- Operate across slopes, never up and down. Avoid operation on excessively steep or wet slopes. Poor footing could cause a slip-and-fall accident.

During Operation Safety (continued)

- Identify hazards at the base of the slope. Do not operate the machine near drop-offs, ditches, embankments, water, or other hazards. The machine could suddenly roll over if a wheel goes over the edge or the edge collapses. Keep a safe distance between the machine and any hazard. Use a handheld tool to operate in these areas.
- Avoid starting, stopping, or turning the machine on slopes. Avoid making sudden changes in speed or direction; turn slowly and gradually.
- Do not operate a machine under any conditions where traction, steering, or stability is in question. Be aware that operating the machine on wet grass, across slopes, or downhill may cause the machine to lose traction. Loss of traction to the drive may result in sliding and a loss of braking and steering. The machine can slide even if you stop the drive.
- Remove or mark obstacles such as ditches, holes, ruts, bumps, rocks, or other hidden hazards. Tall grass can hide obstacles. Uneven terrain could overturn the machine.
- If you lose control of the machine, step away from the direction of travel of the machine.
- Always keep the machine in gear when going down slopes. Do not coast downhill (applicable only to gear-drive units).

Starting the Machine

1. Ensure that the T-handle connector on the main wire harness is connected to the main power supply connector
2. Ensure that the clutch bail is disengaged.
3. Move the key switch to the On position.

Mowing Overview

1. Transport the machine to the area of operation.
2. Start the machine, set the speed control to a reduced speed, push down on the handle to raise the cutting unit, and engage the traction drive to transport the machine onto the collar or approach of the green.
3. Stop the machine on the collar or approach.
4. Use the speed control to increase the machine speed, engage the cutting unit, engage the traction drive to move the machine onto the green, lower the cutting unit to the ground, and begin mowing.

Mowing Tips

IMPORTANT

Grass clippings act as a lubricant when mowing. Operating the cutting unit excessively without grass clippings can damage the cutting unit.

Mowing Overview (continued)

- Mow the greens in a straight back-and-forth direction across the green.
- Avoid circular mowing or turning the machine on the greens areas to prevent scuffing.
- Turn the machine off the green by raising the cutting reel (pushing the handle down) and performing a tear-shaped turn on the traction drum.
- Mow at a normal walking pace. Fast speeds saves little time and results in an inferior mowing job.

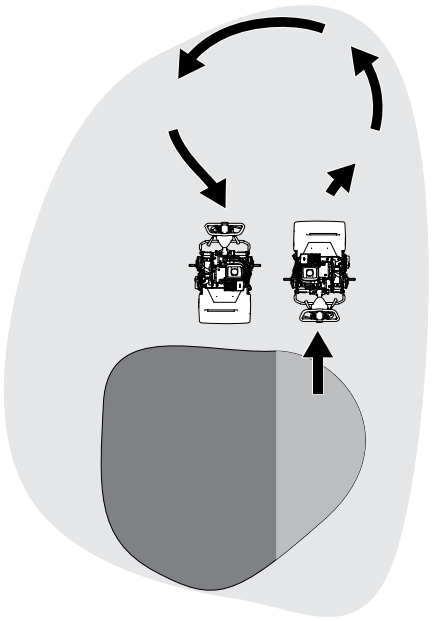

G404724

- To assist in maintaining a straight line across the green and to keep the machine an equal distance from the edge of the previous cut, use the alignment stripes on the basket (1) .

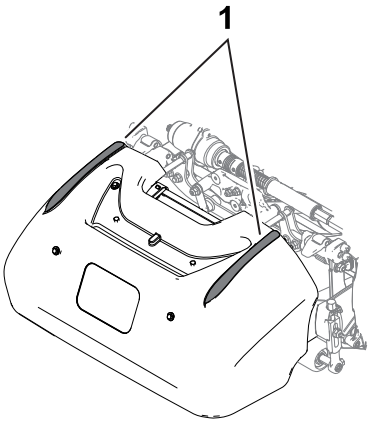

G404728

Shutting Off the Machine

1. Release the clutch bail.
2. Move the speed control to the SLOW position.
3. Move the key switch to the OFF position and remove the key.

After Operation

After Operation Safety

General Safety

- Shut off the machine, remove the key (if equipped), and wait for all movement to stop before you leave the operator's position. Allow the machine to cool before adjusting, servicing, cleaning, or storing it.
- Clean grass and debris from the machine to help prevent fires.
- Allow the machine to cool before storing the machine in any enclosure.
- Do not store the machine where there is an open flame, spark, or pilot light, such as on a water heater or on other appliances.

Operating the Machine after Mowing

1. Drive the machine off of the green, push down on the handle to raise the cutting unit, release the clutch bail, disengage the cutting unit, and shut off the machine.
2. Remove the grass basket and empty the basket of clippings.
3. Install the grass basket on the machine and transport the machine to storage.

Disengaging the Transmission

You can disengage the drum from the transmission to allow the machine to be maneuvered. Disengage the transmission when you need to move the machine without starting it (e.g., performing maintenance in an enclosed area). Before you operate the machine, ensure that you engage the transmission.

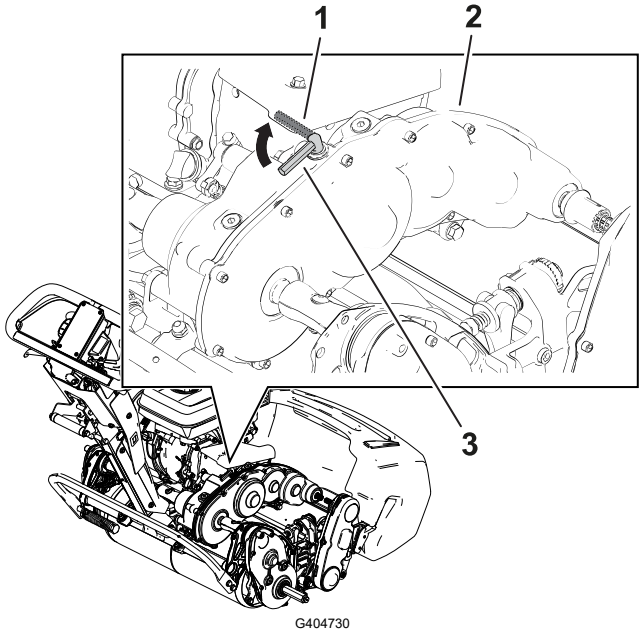

(1) Traction-engagement lever—DISENGAGED position (2) Transmission gearbox

Disengaging the Transmission (continued)

3 Traction-engagement lever—ENGAGED position

Transporting the Machine

Installing the Transport Wheels

You can purchase an optional Transport Wheel Kit (Model 04123); contact your authorized Toro distributor.

1. Ensure that the tires are inflated to 83 to 103 kPa (12 to 15 psi).
2. Move the kickstand to the TRANSPORT-WHEEL-SERVICE position.
3. Slide a wheel onto an axle 1.
4. Pivot the wheel-locking clip 2 away from center of the wheel, allowing it to slide farther onto the axle.
5. Rotate the wheel back and forth until it slides completely onto the axle and the locking clip is secured in the groove on the axle shaft.
6. Repeat the procedure on the opposite side of the machine.
7. Carefully lower the machine off the kickstand.

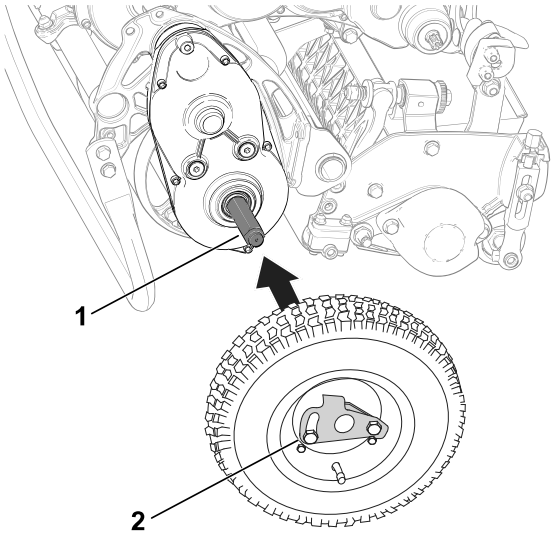

G406965

Transporting the Machine Using Transport Wheels

Use the transport wheels to transport the machine a shorter distance.

1. Install the transport wheels.
2. Ensure that the traction and reel-drive controls are in the NEUTRAL position.
3. Start the engine and set the throttle control to SLOW.
4. Tip the front of the machine up and gradually engage the traction drive.
5. Adjust the throttle to operate the mower at the desired ground speed and transport the machine to the desired destination.

Removing the Transport Wheels

1. Release the clutch bail, use the throttle control to lower the engine speed, and shut off the engine.
2. Move the kickstand to the TRANSPORT-WHEEL-SERVICE position.

Removing the Transport Wheels (continued)

3. Remove the transport wheels by pushing the wheel-locking clips ② out of the axles ①.
4. Carefully lower the machine off of the kickstand by pushing forward slowly or by lifting the lower handle support, allowing the kickstand to spring back to the STORAGE position..

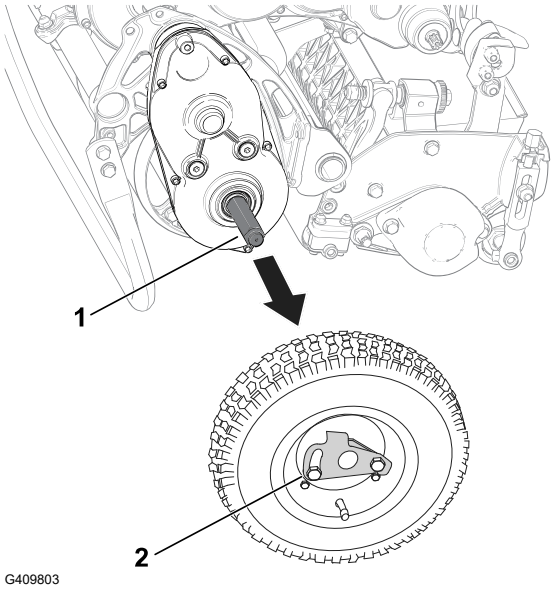

Hauling the Machine

Use a trailer to transport the machine a considerable distance. Use caution while loading and unloading the machine onto the trailer.

Note: You can use the Toro Trans Pro trailer to transport the machine. For instructions on loading the trailer, refer to your trailer *Operator's Manual*.

1. Carefully drive the machine onto the trailer.
2. Shut off the engine, engage the parking brake, and turn the fuel valve to the OFF position.

IMPORTANT

Do not run the engine while transporting it on a trailer because damage can occur to the machine.

3. Use a full-width ramp for loading the machine into a trailer or truck.
4. Securely fasten the machine to the trailer.

Battery Operation

Battery and Charger Safety

Battery and Charger Safety (continued)

General

- Improperly using or maintaining the battery charger could result in injury. To reduce this potential, comply with the all safety instructions.
- Use only the supplied charger for battery charging.
- Confirm the voltage that is available in your country before using the charger.
- For connection to a supply not in the US, use an attachment plug adapter of the proper configuration for the power outlet, if needed.
- Do not get the charger wet; keep it protected from rain and snow.
- A risk of fire, electric shock, or injury may result from using an accessory not recommended or sold by Toro.
- To reduce risk of a battery explosion, follow these instructions and the instructions for any equipment that you intend to use near the charger.
- Batteries could emit explosive gasses if they are significantly overcharged.

Training

- Never allow children or untrained people to operate or service the charger. Local regulations may restrict the age of the operator. The owner is responsible for training all operators and mechanics.
- Read, understand, and follow all instructions on the charger and in the manual before operating the charger. Be familiar with the proper use of the charger.

Preparation

- Keep bystanders and children away while charging.
- Wear appropriate clothing while charging, including eye protection; long pants; and substantial, slip-resistant footwear.
- Shut off the machine and wait 5 seconds until the machine has completely powered down before charging. Failure to do this may cause arcing.
- Ensure that the area is well ventilated while charging.
- Read and follow all precautions for charging.
- The charger is for use only on nominal 120 and 240 VAC circuits, and is equipped with a grounding plug for 120 VAC operation. For use with 240 V circuits, contact your authorized Toro distributor for the correct power cord.

Operation

- Do not charge a frozen battery.
- Do not abuse the cord. Do not carry the charger by the cord or yank on the power supply cord to disconnect the charger from the receptacle. Keep the cord from heat, oil, and sharp edges.
- Connect the charger directly to a grounding receptacle. Do not use the charger on an ungrounded outlet, even with an adaptor.

Battery and Charger Safety (continued)

- Do not alter the provided power cord or plug.
- Do not alter the provided power cord or plug.
- Avoid dropping a metal tool near or onto a battery; it might cause a spark or short-circuit an electrical part that could lead to an explosion.
- Remove metal items such as rings, bracelets, necklaces, and watches when working with a lithium-ion battery. A lithium-ion battery can produce enough current to cause a severe burn.
- Never operate the charger without good visibility or light.
- Use an appropriate extension cord.
- If the power supply cord is damaged while it is plugged in, disconnect the cord from the wall receptacle and contact an authorized Toro distributor for a replacement.
- Unplug the charger from the electrical outlet when not in use, before moving it to another location, or prior to servicing it.

Maintenance and Storage

- Store the charger indoors in a dry, secure place that is out of the reach of unauthorized users.
- Do not disassemble the charger. Take the charger to an authorized Toro distributor when service or repair is required.
- Unplug the power cord from the outlet before starting any maintenance or cleaning to reduce risk of electric shock.
- Maintain or replace safety and instruction labels as needed.
- Do not operate the charger with a damaged cord or plug. Replace a damaged cord or plug immediately.
- If the charger has received an impact, been dropped, or otherwise damaged, do not use it; take it to an authorized Toro distributor.

Transporting the Lithium-Ion Battery

The US Department of Transportation and international transportation authorities require that lithium ion batteries be transported using special packaging and only be transported by carriers certified to haul them. In the US, you are allowed to transport the battery when it is installed on the machine as battery powered equipment, with some regulatory requirements. Contact the US Department of Transportation or the appropriate government body in your country for detailed regulations on transportation of your eFlex or eFlex battery.

For detailed information on shipping a battery, contact your authorized Toro distributor.

Caring for the Lithium-Ion Battery

The lithium-ion battery holds a sufficient charge to perform intended work during its life span. As time goes by, the total amount of work the battery is able to complete on a single charge gradually diminishes. The following table lists the approximate expected work that the machine should be capable of over the first 4 years of use:

Caring for the Lithium-Ion Battery (continued)

Year	Area Cut Per Full Charge
1	3,809 m^2 (41,000 ft^2)
2	3,623 m^2 (39,000 ft^2)
3	3,252 m^2 (35,000 ft^2)
4	3,066 m^2 (33,000 ft^2)

Note: Your results may vary depending on the distance you need to transport the machine, the contact setting of the bedknife, and other factors as discussed in this section.

To achieve maximum life and use from your battery, apply the following care guidelines:

- Do not open the battery pack. There are no user serviceable parts inside. If you open the pack you will void your warranty. The pack is protected by tamper-alerting devices.
- Store/park the machine in a clean, dry garage or storage area, **away from direct sunlight and heat sources.** Do not store it in a location where the temperature drops below -30°C (-22°F) or rises above 60°C (140°F). **Temperatures outside of this range will damage your battery.** High temperatures during storage, especially at a high state of charge, reduces the life of the batteries.
- When storing for more than 10 days, ensure that the machine is in a cool location, out of sunlight, and at least 50% charged.
- If you are mowing in hot conditions or in sunlight, the battery may overheat. If this happens, a high-temperature alert will appear on the InfoCenter. In this condition, the machine no longer operates with the reel engaged and the machine slows down.

  Immediately drive the machine to a cool location out of the sun, turn off the machine, and allow the battery to cool fully before resuming operation.
- Keep the battery pack cover clean. The white color reflects sunlight and slows the heat buildup in the battery pack. A dirty cover increases the heat in the battery pack each day and reduces the energy capacity.
- Adjust the bedknife to reel contact to be as light as possible. This reduces the power needed to run the reel and increases the amount of work the machine performs on each charge.

Using the Lithium-Ion Battery Charger

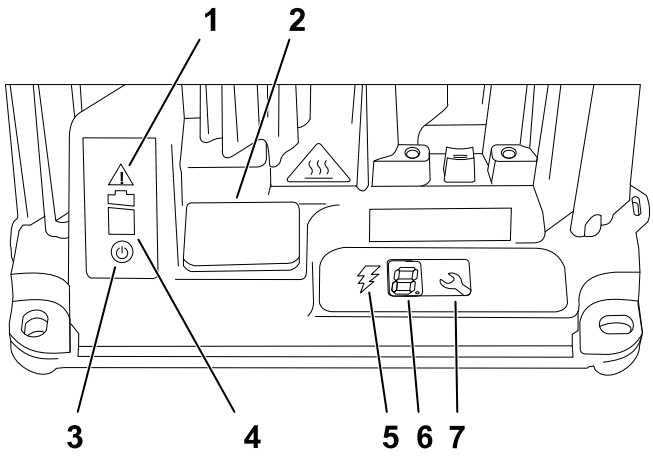

G404840

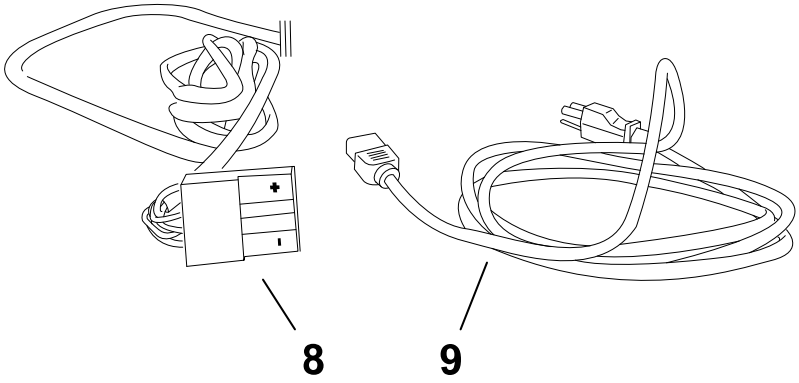

G404841

1. Error indicator light
2. USB port cover
3. AC power indicator light
4. Battery charging indicator light
5. Charging output indicator light
6. LCD display
7. Select button
8. Output connector and cord
9. Power-supply cord

Connecting to a Power Source

To reduce the risk of electric shock, this charger has a 3-prong grounded plug (type B). If the plug does not fit into the wall receptacle, other grounded plug types are available; contact an authorized Toro distributor.

Do not change the charger or the power supply cord plug in any way.

DANGER

Contact with water while operating the machine could cause electric shock, causing injury or death.

Do not handle the plug or the charger with wet hands or while standing in water.

Using the Lithium-Ion Battery Charger (continued)

IMPORTANT

Check the power supply cord periodically for holes or cracks in the insulation. Do not use a damaged cord. Do not run the cord through standing water or wet grass.

1. Insert the charger plug on the power supply cord into the matching input power socket on the charger.

WARNING

A damaged charger cord can cause an electrical shock or a fire.

Thoroughly inspect the power supply cord before using the charger. If the cord is damaged, do not operate the charger until you obtain a replacement.

2. Insert the wall plug end of the power supply cord into a grounded electrical outlet.

Charging the Lithium-Ion Battery

CAUTION

Attempting to charge the batteries with a charger not provided by Toro can result in excessive heat and other related product malfunctions, which can lead to property damage and/or injury.

Use the Toro-provided charger to charge the battery.

Recommended Temperature Range for Charging

Recommended charging range	0° to 45°C (32° to 113°F)
Low-temperature charging range (Reduced current)	-10° to 0°C (14° to 32°F)
High-temperature charging range (Reduced current)	45° to 60°C (113° to 140°F)

IMPORTANT

Charge the batteries only in temperatures that are within the recommended range.

Note: The charger will not function in temperatures exceeding the minimum or maximum temperatures.

1. Park the machine in the location designated for overnight charging.

Using the Lithium-Ion Battery Charger (continued)

2. Engage the parking brake.
3. Shut off the machine and remove the key.
4. Disconnect the T-handle connector ① from the main wire harness to the main-power-supply connector ② on the battery base.
5. Clean and dry both the battery pack and charger connectors.

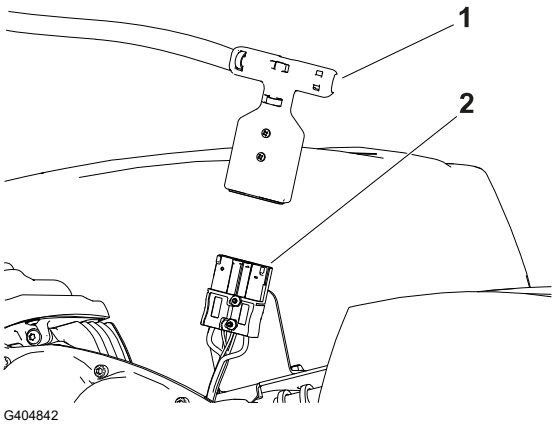

IMPORTANT

Do not use strong solvents that will degrade the strength of the connector plastic. Do not use dielectric grease on the connector or battery contacts.

6. Align the positive connectors (marked with a “+”) of the charger connector and the power supply connector and push them together until they lock.

Monitoring the Charging Process and Troubleshooting

Note: The LCD status display displays messages during the course of charging. Most messaged are routine.

If there is a fault, the error indicator light will flash amber, or light solid red. An error message will appear 1 digit at a time on the InfoCenter, starting with the letter E or F (e.g., E-0-1-1).

To correct an error, refer to machine *Service Manual*.

Disconnecting the Charger

1. Disconnect the charger T-handle connector from the battery-power supply connector affixed to the battery tray.

IMPORTANT

Do not pull on the cables

2. Place the charger T-handle and cord in a storage position that will avoid damage.

Chapter 6

Maintenance

WARNING

Failure to properly maintain the machine could result in premature failure of machine systems, causing possible harm to you or bystanders.
Keep the machine well maintained and in good working order as indicated in these instructions.

Note: Determine the left and right sides of the machine from the normal operating position.

IMPORTANT

Do not tip the machine at an angle greater than 25°. Tipping the machine beyond 25° leads to oil leaking into the combustion chamber and/or fuel leaking out of the fuel-tank cap.

IMPORTANT

Refer to your engine owner's manual for additional maintenance procedures.

Maintenance Safety

- Before you leave the operator's position, do the following:
  - Park the machine on a level surface.
  - Disengage the cutting unit(s).
  - Ensure that the traction is in neutral.
  - Engage the parking brake.
  - Shut off the machine and remove the key (if equipped).
  - Wait for all movement to stop.
- Allow machine components to cool before performing maintenance.
- If possible, do not perform maintenance while the machine is running. Keep away from moving parts.
- If the machine must be on to perform a maintenance adjustment, keep your hands, feet, clothing, and any parts of the body away from the cutting unit, attachments, and any moving parts. Keep bystanders away.
- Clean grass and debris from the cutting unit, drive, motor, and battery to help prevent fires.
- Keep all parts in good working condition. Replace all worn, damaged, or missing parts and decals. Keep all hardware tight to ensure that the machine is in safe working condition.
- Check the grass catcher components frequently and replace them when necessary.
- To ensure safe, optimal performance of the machine, use only genuine Toro replacement parts. Replacement parts made by other manufacturers could be dangerous, and such use could void the product warranty.
- If major repairs are ever needed or if assistance is desired, contact an authorized Toro distributor.

Recommended Maintenance Schedule

Maintenance Service Interval	Maintenance Procedure	Part No.	Qty	Description
Before each use or daily	Clean the machine.	-	-	-
Every 750 hours	Change the transmission fluid.	505-183	1	Dexron VI synthetic transmission fluid (18.9 L or 5 US gallons)
Yearly	Adjust the traction cable.	-	-	-

Daily Maintenance Checklist

Duplicate this page for routine use.

Maintenance Check Item	For the week of:						
	Mon.	Tues.	Wed.	Thurs.	Fri.	Sat.	Sun.
Check the brake-lock-lever operation.							
Check for unusual operating noises.							
Check the reel-to-bedknife adjustment.							
Check the height-of-cut adjustment.							
Touch up damaged paint.							
Clean the machine.							

Notation for Areas of Concern

Inspection performed by:		
Item	**Date**	**Information**

Pre-Maintenance Procedures

Preparing the Machine for Maintenance

WARNING

While you are maintaining or adjusting the machine, someone could start the machine. Accidentally starting the machine could seriously injure you or other bystanders.

Release the traction bail, engage the parking brake, remove the key, and disconnect the battery before you do any maintenance.

1. Park the machine on a level surface.
2. Engage the parking brake.
3. Shut off the machine.
4. Wait for all moving parts to stop before servicing, storing, or making repairs.
5. Disconnect the battery by pulling the T-handle connector (1) off of the main-power connector (2).

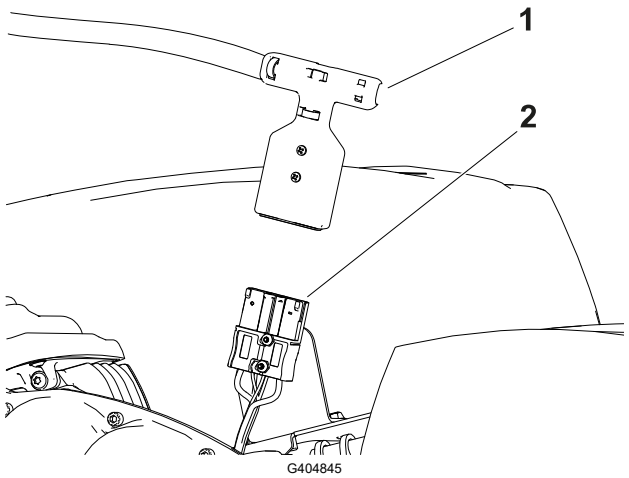

Electrical System Maintenance

Electrical System Safety

- Disconnect the battery before repairing the machine.
- Charge the battery in an open, well-ventilated area, away from sparks and flames. Unplug the charger before connecting or disconnecting the battery. Wear protective clothing and use insulated tools.

Servicing the Lithium-Ion Battery

The only user serviceable parts in the battery pack are the labels. If you are having problems with your battery, contact your authorized Toro distributor for help.

WARNING

The battery contains high voltage, which could burn or electrocute you.

- **Do not attempt to open the battery.**
- **Do not place anything in the battery connector other than the wire-harness connector that came with the product.**
- **Use extreme care when handling a battery with a cracked case.**
- **Only use the charger designed for the battery.**

Battery Disposal

The lithium-ion battery must be disposed of or recycled in accordance with local and federal regulations.

Maintaining the Battery Charger

IMPORTANT

All electrical repairs should be performed by an authorized Toro distributor only.

The operator can perform very little maintenance other than protecting the charger from damage and weather.

- Clean the charger cords and case with a slightly damp cloth after each use.
- Coil the cords when not in use.
- Periodically examine the cords for damage, and replace them when necessary with Toro-approved parts.

Replacing Fuses

If the machine does not turn on, even after charging, check the machine fuses as follows:

1. Turn off the machine and disconnect the battery pack.

Replacing Fuses (continued)

2. Remove the 4 screws (1) that secure the battery-pack cover and remove the cover.
3. Check the fuses in the fuse block (2).

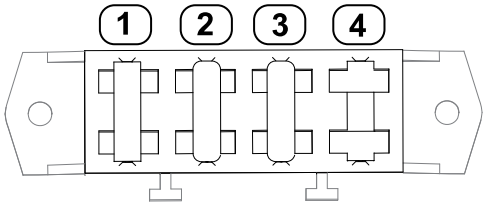

G404909

(1) 30A—main power supply circuits

(2) 3A—logic power supply circuits

(3) 3A—optional LED work light circuit

(4) Open slot

4. If any fuse is blown, replace them with a fuse of the appropriate voltage and amperage. Refer to the traction unit *Service Manual* for specific fuse part numbers.

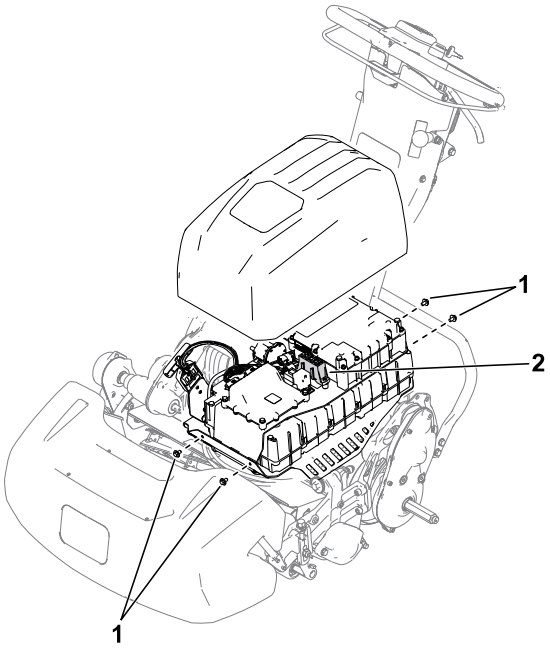

G404897

IMPORTANT

All fuses on the machine are rated for 80V. Do not use 12V automotive fuses.

Controls Maintenance

Adjusting the Service/Parking Brake

Adjust the service/parking brake if it slips during operation.

1. Disengage the parking brake.

Adjusting the Service/Parking Brake (continued)

2. Measure the free play at the end of the parking-brake handle ①.

   The handle free play should be between 12.7 to 25.4 mm (0.50 to 1 inch) ②. If the free play is not within this amount, proceed to the following step to adjust the brake cable ③.

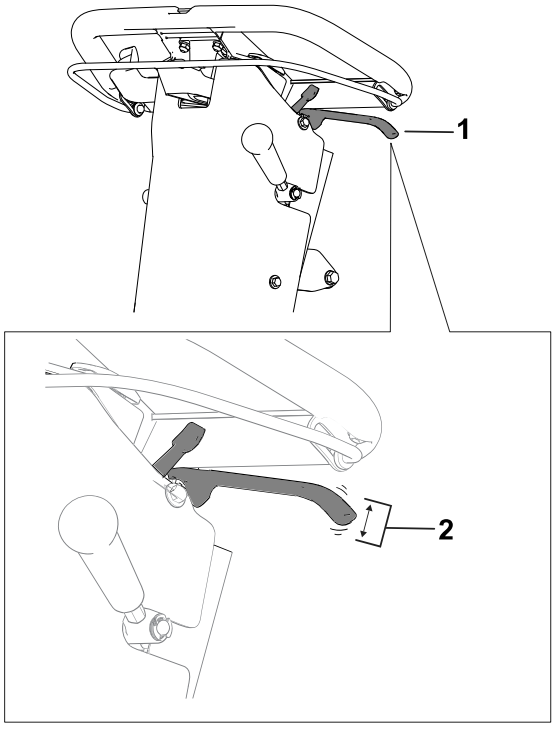

G404912

3. Perform the following steps to adjust the brake-cable tension:

   - To increase the cable tension, loosen the front-cable jam nut ① and tighten the rear jam nut ②. Repeat the previous step and adjust the tension if necessary.
   - To decrease the cable tension, loosen the rear jam nut ② and tighten the front-cable jam nut ①. Repeat the previous step and adjust the tension if necessary.

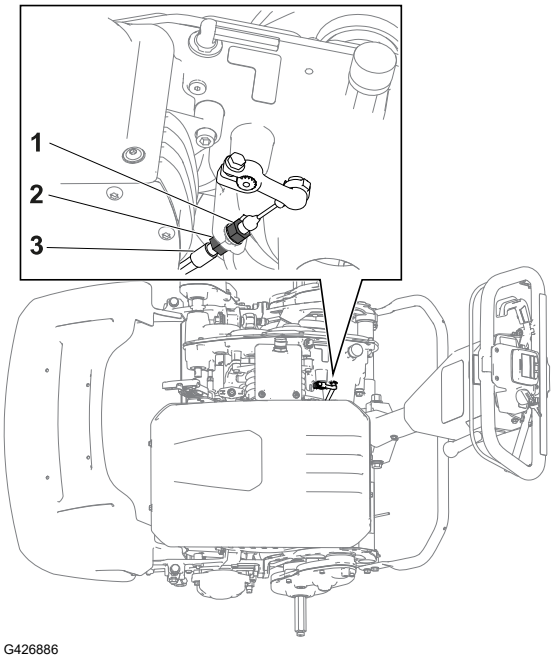

G426886

Drive System Maintenance

Changing the Transmission Fluid

1. Remove the breather vent and adapter assembly ① from the transmission.

Changing the Transmission Fluid (continued)

2. Have an assistant tip the machine backwards and place a pan④ under the transmission②.

   Note: Use the pan to collect the transmission fluid.

3. Remove the drain plug③ from the transmission and let the fluid drain out.
4. Install the drain plug.

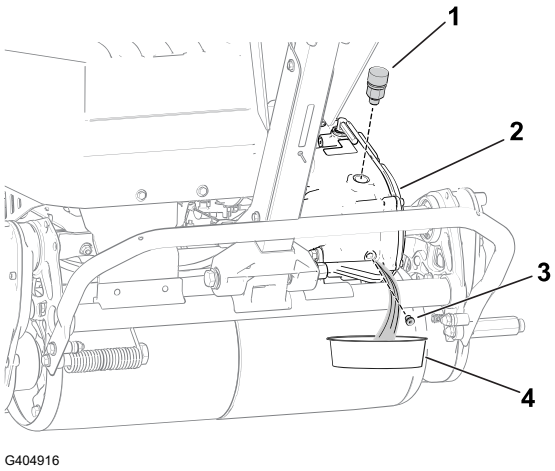

G404916

5. Torque the drain plug to **4 to 5 N·m (32 to 42 in-lb)**.
6. Add 473 ml (16 fl oz) of Dexron VI synthetic transmission fluid through the adapter vent.
7. Install the breather vent and adapter assembly and tighten it to **12 to 15 N·m (110 to 130 in-lb)**.

Cutting Unit Maintenance

Blade Safety

- Use care when checking the reel cutting-unit. Wear gloves and use caution when servicing the reel.
- A worn or damaged blade or bedknife can break, and a piece could be thrown toward you or bystanders, resulting in serious personal injury or death.
- Inspect the blades and bedknives periodically for excessive wear or damage.
- Use care when checking the blades. Wear gloves and use caution when servicing them. Only replace or backlap the blades and bedknives; never straighten or weld them.

Installing the Cutting Unit

1. Move the kickstand to the CUTTING-UNIT-SERVICE position.
2. Align the cutting unit to the frame.

Installing the Cutting Unit (continued)

3. Move the suspension latches ① down to secure the cutting unit to the machine.
4. Move the collar ② out of the transmission-coupler-shaft groove and insert the hex tube ③ into the cutting-unit coupler shaft ④.
5. Install the grass basket.

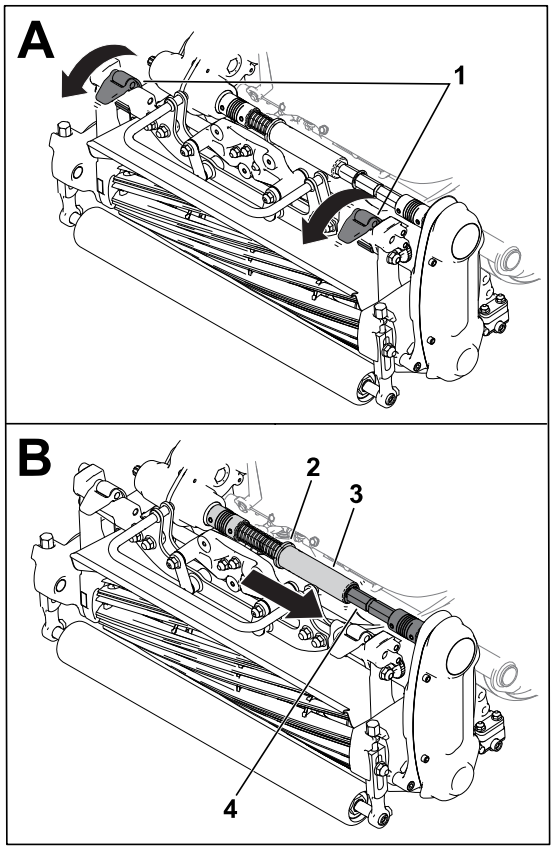

G404930

Removing the Cutting Unit

Note: The hex tube ② disengages if you engage the reel drive when the cutting unit is removed.

1. Move the kickstand to the CUTTING-UNIT-SERVICE position.
2. Remove the grass basket (if equipped).
3. Move the collar ① into the transmission-shaft groove.

   Note: This releases tension from the spring.

Removing the Cutting Unit (continued)

4. Slide the hex tube ② off of the cutting-unit coupler shaft ③.
5. Move the suspension latches ④ up to release the cutting unit from the machine.
6. Remove the cutting unit from the frame.

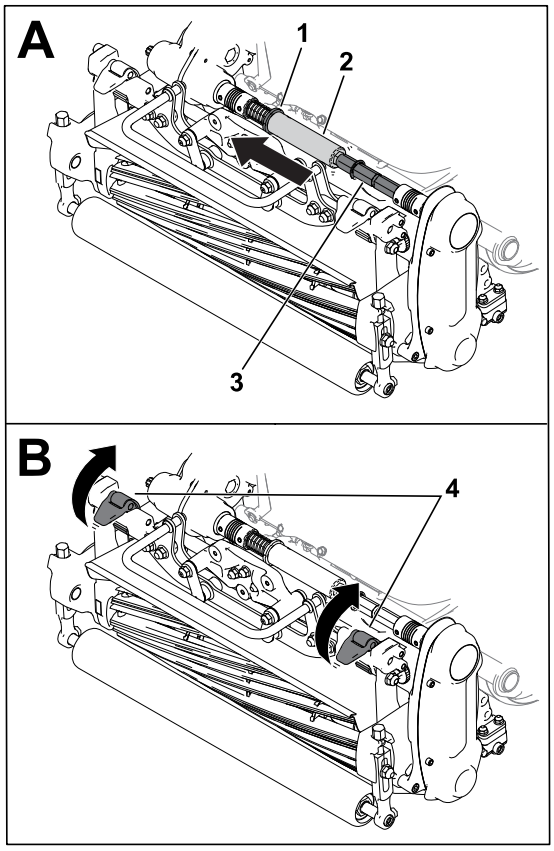

G404931

Backlapping Information

To backlap the cutting unit, perform 1 of the following options:

- Install the Access Backlap Kit (Model 139-4342) and use a backlapping machine. Contact your authorized distributor to acquire this kit.
- Use the InfoCenter to enter Backlap Mode.

  To enter Backlap Mode, select BACKLAP from the SERVICE menu. Follow the InfoCenter prompts to backlap the cutting unit.

  Note: Once the bail ② is released, Backlap Mode is disengaged. You can use the bail-catch fork ① (shipped in the loose-parts bag) to secure the bail in the engaged position.

  Remove the bail-catch fork after your backlapping is completed.

Backlapping Information (continued)

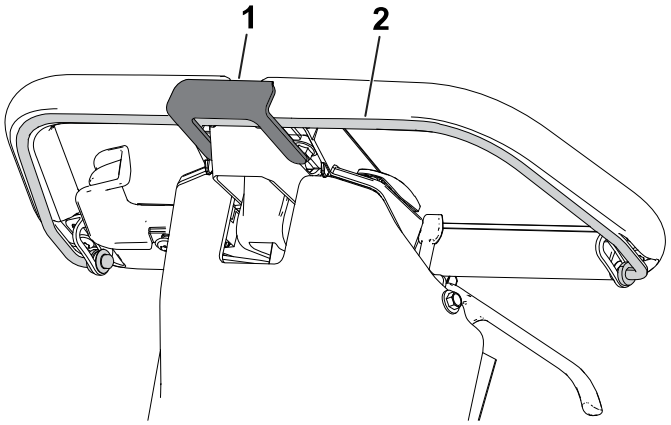

1 Bail-catch fork

2 Bail

Cleaning

Cleaning the Machine

After each use, wash the machine with mild detergent and water. Do not pressure wash the machine. Avoid excessive use of water, especially near the shift-lever plate, the InfoCenter, the power center, and the machine power connector. Clean the motor to provide proper cooling during operation. Also, keep the battery pack as clean as possible so that it maintains a white color. This reflects sunlight and keeps the battery from overheating in the sun.

IMPORTANT

Do not use brackish or reclaimed water to clean the machine.

IMPORTANT

Always store or park the machine out of direct sunlight, as heating from the sun reduces the battery-pack life span.

Storage Safety

- Shut off the machine, remove the key (if equipped), and wait for all movement to stop before you leave the operator's position. Allow the machine to cool before adjusting, servicing, cleaning, or storing it.
- Do not store the machine where there is an open flame, spark, or pilot light, such as on a water heater or other appliance.

Storing the Machine

1. Clean the machine.

IMPORTANT

You can wash the machine with mild detergent and fresh clean water. Do not pressure-wash the machine. Avoid excessive use of water, especially near the shift-lever plate, the InfoCenter, the power center, and the machine power connector.

2. Check and tighten all fasteners. Repair or replace any part that is worn or damaged.
3. Paint all scratched or bare metal surfaces with paint available from your authorized Toro distributor.
4. For prolonged storage, follow the battery storage requirements.
5. Cover the machine to protect it and keep it clean.

Battery Storage Requirements

Note: You do not need to remove the battery from the machine for storage.

Refer to the temperature requirements for storage in the following table:

Temperature Requirements for Storage

Storage Conditions	Temperature Requirement
Normal storage conditions	-20° to 45°C (-12° to 113°F)
Extreme heat—1 month or less	45° to 60°C (113° to 140°F)
Extreme cold—3 months or less	-30° to -20°C (-22° to -12°F)

IMPORTANT

Temperatures outside of this range will damage your battery.

The temperature that the battery are stored at will affect their long-term life. Storage for long periods of time at extreme temperatures will reduce the battery life. Store the machine in a cool (not below freezing) location.

- Before you store the machine, charge or discharge the battery between 40% to 60% (50.7V to 52.1V).

  Note: A 50% charge is optimal to ensure a maximum battery life. When the battery is charged to 100% before storage, the battery life shortens.

  If you anticipate that the machine will be stored for a longer period of time, charge the battery to around 60%.
- For every 6 months of storage, check the battery-charge level and ensure that it is between 40% to 60%. If the charge is below 40%, charge the battery between 40% to 60%.
- You can use a multimeter to check the charge level when the machine is off. Refer to the following table for the amount of voltage that is equal to the charge level:

Voltage	Charge Level
52.1V	60%
51.4V	50%
50.7V	40%

- After charging the battery, disconnect the battery charger from power. Disconnect the power connector during storage to minimize the discharging of the battery.
- If you leave the charger on the machine, it will shut off after the battery is fully charged and does not turn back on unless the charger is disconnected and reconnected.

Storing the Charger

1. Disconnect the charger from the machine.
2. Disconnect the power-supply cord from the charger and coil it securely.
3. Examine the power supply cord thoroughly for signs of wear or damage. Replace it if it is worn or damaged.
4. Examine the charger thoroughly for worn, loose, or damaged parts. To repair or replace parts, contact your authorized Toro distributor for assistance.
5. Store the charger with the power supply cord in a clean, dry place where it will not be bumped or damaged and not exposed to caustic fumes.

Battery Warranty

The rechargeable Lithium-Ion battery is warranted to be free from defects in materials and workmanship for a period of years as listed in the table below. Over time, battery consumption reduces the amount of energy capacity (Amp-hours) available per full charge. Energy consumption varies due to operating characteristics, accessories, turf, terrain, adjustments, and temperature.

Product	Warranty Period
Workman GTX Lithium Utility Vehicle	5 years
Greensmaster eTriFlex Traction Unit	4 years
Greensmaster eFlex 1021/e1021 Greensmower	4 years

The Toro Warranty

Two-Year or 1,500 Hours Limited Warranty

Conditions and Products Covered

The Toro Company warrants your Toro Commercial product (“Product”) to be free from defects in materials or workmanship for 2 years or 1,500 operational hours*, whichever occurs first. This warranty is applicable to all products with the exception of Aerators (refer to separate warranty statements for these products). Where a warrantable condition exists, we will repair the Product at no cost to you including diagnostics, labor, parts, and transportation. This warranty begins on the date the Product is delivered to the original retail purchaser. *Product equipped with an hour meter.

Instructions for Obtaining Warranty Service

You are responsible for notifying the Commercial Products Distributor or Authorized Commercial Products Dealer from whom you purchased the Product as soon as you believe a warrantable condition exists. If you need help locating a Commercial Products Distributor or Authorized Dealer, or if you have questions regarding your warranty rights or responsibilities, you may contact us at:

Toro Commercial Products Service Department
8111 Lyndale Avenue South
Bloomington, MN 55420-1196
952-888-8801 or 800-952-2740
E-mail: commercial.warranty@toro.com

Owner Responsibilities

As the product owner, you are responsible for required maintenance and adjustments stated in your *Operator's Manual*. Repairs for product issues caused by failure to perform required maintenance and adjustments are not covered under this warranty.

Items and Conditions Not Covered

Not all product failures or malfunctions that occur during the warranty period are defects in materials or workmanship. This warranty does not cover the following:

- Product failures which result from the use of non-Toro replacement parts, or from installation and use of add-on, or modified non-Toro branded accessories and products.
- Product failures which result from failure to perform recommended maintenance and/or adjustments.
- Product failures which result from operating the Product in an abusive, negligent, or reckless manner.
- Parts consumed through use that are not defective. Examples of parts which are consumed, or used up, during normal Product operation include, but are not limited to, brake pads and linings, clutch linings, blades, reels, rollers and bearings (sealed or greasable), bed knives, spark plugs, castor wheels and bearings, tires, filters, belts, and certain sprayer components such as diaphragms, nozzles, flow meters, and check valves.
- Failures caused by outside influence, including, but not limited to, weather, storage practices, contamination, use of unapproved fuels, coolants, lubricants, additives, fertilizers, water, or chemicals.
- Failure or performance issues due to the use of fuels (e.g. gasoline, diesel, or biodiesel) that do not conform to their respective industry standards.
- Normal noise, vibration, wear and tear, and deterioration. Normal “wear and tear” includes, but is not limited to, damage to seats due to wear or abrasion, worn painted surfaces, scratched decals or windows.

Parts

Parts scheduled for replacement as required maintenance are warranted for the period of time up to the scheduled replacement time for that part. Parts replaced under this warranty are covered for the duration of the original product warranty and become the property of Toro. Toro will make the final decision whether to repair any existing part or assembly or replace it. Toro may use remanufactured parts for warranty repairs.

Deep Cycle and Lithium-Ion Battery Warranty

Deep cycle and Lithium-Ion batteries have a specified total number of kilowatt-hours they can deliver during their lifetime. Operating, recharging, and maintenance techniques can extend or reduce total battery life. As the batteries in this product are consumed, the amount of useful work between charging intervals will slowly decrease until the battery is completely worn out. Replacement of worn out batteries, due to normal consumption, is the responsibility of the product owner.

Note: (Lithium-Ion battery only) Refer to the battery warranty for additional information.

Lifetime Crankshaft Warranty (ProStripe 02657 Model Only)

The Prostripe which is fitted with a genuine Toro Friction Disc and Crank-Safe Blade Brake Clutch (integrated Blade Brake Clutch (BBC) + Friction Disc assembly) as original equipment and used by the original purchaser in accordance with recommended operating and maintenance procedures, are covered by a Lifetime Warranty against engine crankshaft bending. Machines fitted with friction washers, Blade Brake Clutch (BBC) units and other such devices are not covered by the Lifetime Crankshaft Warranty.

Maintenance is at the Owner’s Expense

Engine tune-up, lubrication, cleaning and polishing, replacement of filters, coolant, and completing recommended maintenance are some of the normal services Toro products require that are at the owner’s expense.

General Conditions

Repair by an Authorized Toro Distributor or Dealer is your sole remedy under this warranty.

The Toro Company is not liable for indirect, incidental or consequential damages in connection with the use of the Toro Products covered by this warranty, including any cost or expense of providing substitute equipment or service during reasonable periods of malfunction or non-use pending completion of repairs under this warranty. Except for the Emissions warranty referenced below, if applicable, there is no other express warranty. All implied warranties of merchantability and fitness for use are limited to the duration of this express warranty.

Some states do not allow exclusions of incidental or consequential damages, or limitations on how long an implied warranty lasts, so the above exclusions and limitations may not apply to you. This warranty gives you specific legal rights, and you may also have other rights which vary from state to state.

Note Regarding Emissions Warranty

The Emissions Control System on your Product may be covered by a separate warranty meeting requirements established by the U.S. Environmental Protection Agency (EPA) and/or the California Air Resources Board (CARB). The hour limitations set forth above do not apply to the Emissions Control System Warranty. Refer to the Engine Emission Control Warranty Statement supplied with your product or contained in the engine manufacturer’s documentation.

Countries Other than the United States, Mexico, or Canada

Customers who have purchased Toro products exported from the United States, Mexico, or Canada should contact their Toro Distributor (Dealer) to obtain guarantee policies for your country, province, or state. If for any reason you are dissatisfied with your Distributor's service or have difficulty obtaining guarantee information, contact your Authorized Toro Service Center.

California Proposition 65 Warning Information

What is this warning?

You may see a product for sale that has a warning label like the following:

 **WARNING:** Cancer and Reproductive Harm—www.p65Warnings.ca.gov.

What is Prop 65?

Prop 65 applies to any company operating in California, selling products in California, or manufacturing products that may be sold in or brought into California. It mandates that the Governor of California maintain and publish a list of chemicals known to cause cancer, birth defects, and/or other reproductive harm. The list, which is updated annually, includes hundreds of chemicals found in many everyday items. The purpose of Prop 65 is to inform the public about exposure to these chemicals.

Prop 65 does not ban the sale of products containing these chemicals but instead requires warnings on any product, product packaging, or literature with the product. Moreover, a Prop 65 warning does not mean that a product is in violation of any product safety standards or requirements. In fact, the California government has clarified that a Prop 65 warning “is not the same as a regulatory decision that a product is ‘safe’ or ‘unsafe.’” Many of these chemicals have been used in everyday products for years without documented harm. For more information, go to https://oag.ca.gov/prop65/faqs-view-all.

A Prop 65 warning means that a company has either (1) evaluated the exposure and has concluded that it exceeds the “no significant risk level”; or (2) has chosen to provide a warning based on its understanding about the presence of a listed chemical without attempting to evaluate the exposure.

Does this law apply everywhere?

Prop 65 warnings are required under California law only. These warnings are seen throughout California in a wide range of settings, including but not limited to restaurants, grocery stores, hotels, schools, and hospitals, and on a wide variety of products. Additionally, some online and mail order retailers provide Prop 65 warnings on their websites or in catalogs.

How do the California warnings compare to federal limits?

Prop 65 standards are often more stringent than federal and international standards. There are various substances that require a Prop 65 warning at levels that are far lower than federal action limits. For example, the Prop 65 standard for warnings for lead is 0.5 µg/day, which is well below the federal and international standards.

Why don’t all similar products carry the warning?

- Products sold in California require Prop 65 labelling while similar products sold elsewhere do not.
- A company involved in a Prop 65 lawsuit reaching a settlement may be required to use Prop 65 warnings for its products, but other companies making similar products may have no such requirement.
- The enforcement of Prop 65 is inconsistent.
- Companies may elect not to provide warnings because they conclude that they are not required to do so under Prop 65; a lack of warnings for a product does not mean that the product is free of listed chemicals at similar levels.

Why does Toro include this warning?

Toro has chosen to provide consumers with as much information as possible so that they can make informed decisions about the products they buy and use. Toro provides warnings in certain cases based on its knowledge of the presence of one or more listed chemicals without evaluating the level of exposure, as not all the listed chemicals provide exposure limit requirements. While the exposure from Toro products may be negligible or well within the “no significant risk” range, out of an abundance of caution, Toro has elected to provide the Prop 65 warnings. Moreover, if Toro does not provide these warnings, it could be sued by the State of California or by private parties seeking to enforce Prop 65 and subject to substantial penalties.

Notes:


TORO