Form No. 3327-640 Rev A

TORO®

13-32G

Wheel Horse® Rear Engine Rider

Model No. 70125—Serial No. 220000001 and Up

Operator’s Manual

CE

International English (GB)

Important The engine in this product is not equipped with a spark arrester muffler. In some areas it is a violation of the law to use or operate this engine on any forest-covered, brush-covered, or grass-covered land.

This spark ignition system complies with Canadian ICES-002.

Ce système d'allumage par étincelle de véhicule est conforme à la norme NMB-002 du Canada.

Contents

	Page
Introduction	2
Safety	3
Safe Operation Practices for Ride-on (riding) Rotary Lawnmower Machines	3
Safe Operating Practices	3
Toro Riding Mower Safety	5
Sound Pressure Level	5
Sound Power Level	5
Vibration Level	5
Slope Chart	7
Safety and Instruction Decals	9
Gasoline and Oil	11
Recommended Gasoline	11
Using Stabilizer/Conditioner	11
Filling the Fuel Tank	11
Checking the Engine Oil Level	11
Operation	12
Think Safety First	12
Controls	12
Parking Brake	12
Positioning the Seat	12
Using the Blade Control (PTO)	12
Setting the Height of Cut	13
Starting and Stopping the Engine	13
The Safety Interlock System	14
Driving Forward or Backward	16
Selecting Ground Speeds	16
Stopping the Machine	16
Emptying the Grass Collector	16
Pushing the Machine by Hand	17
Installing the Recycler® Cover	17
Tips for Mowing Grass	18
Maintenance	19
Recommended Maintenance Schedule	19
Servicing the Engine Oil	20
Servicing the Battery	21
Servicing the Air Cleaner	23
Servicing the Spark Plug	24
Checking the Tire Pressure	25
Greasing and Lubrication	25
Checking the Parking Brake	25
Draining the Fuel Tank	25
Replacing the Fuel Filter	26
Servicing the Fuses	26
Servicing the Cutting Blade	26
Leveling the Mower	27
Washing the Underside of the Mower	28
Washing the Machine	28
Cleaning and Storage	29
Wiring Diagram	30
Troubleshooting	31

Introduction

Read this manual carefully to learn how to operate and maintain your product properly. The information in this manual can help you and others avoid injury and product damage. Although Toro designs and produces safe products, you are responsible for operating the product properly and safely.

Whenever you need service, genuine Toro parts, or additional information, contact an Authorized Service Dealer or Toro Customer Service and have the model and serial numbers of your product ready. Figure 1 illustrates the location of the model and serial numbers on the product.

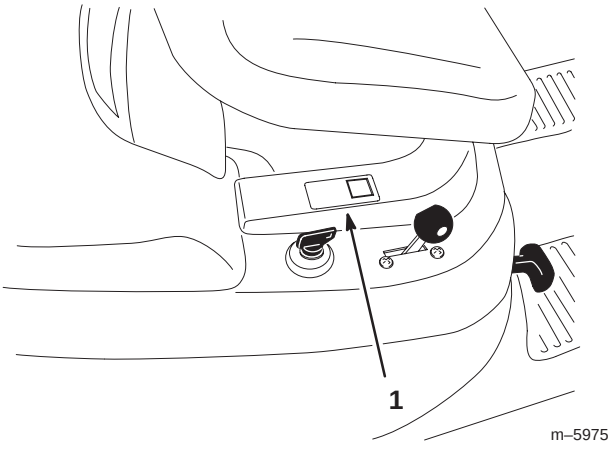

Figure 1

1. Location of the model and serial numbers

© 2002 by The Toro Company
8111 Lyndale Avenue South
Bloomington, MN 55420-1196

All Rights Reserved
Printed in the USA

Write the product model and serial numbers in the space below:

Model No. _____

Serial No. _____

This manual identifies potential hazards and has special safety messages that help you and others avoid personal injury and even death. ***Danger***, ***Warning***, and ***Caution*** are signal words used to identify the level of hazard. However, regardless of the hazard, be extremely careful.

Danger signals an extreme hazard that *will* cause serious injury or death if you do not follow the recommended precautions.

Warning signals a hazard that *may* cause serious injury or death if you do not follow the recommended precautions.

Caution signals a hazard that may cause minor or moderate injury if you do not follow the recommended precautions.

This manual uses two other words to highlight information. **Important** calls attention to special mechanical information and **Note:** emphasizes general information worthy of special attention.

Safety

Safe Operation Practices for Ride-on (riding) Rotary Lawnmower Machines

This machine meets or exceeds European Standards in effect at the time of production. However, improper use or maintenance by the operator or owner can result in injury. To reduce the potential for injury, comply with these safety instructions and always pay attention to the safety alert ⚠ symbol, which means CAUTION, WARNING, or DANGER—"personal safety instruction." Failure to comply with the instruction may result in personal injury or death.

Safe Operating Practices

The following instructions are from the CEN standard EN 836:1997.

This product is capable of amputating hands and feet and throwing objects. Always follow all safety instructions to avoid serious injury or death.

Training

- Read the instructions carefully. Be familiar with the controls and the proper use of the equipment.
- Never allow children or people unfamiliar with these instructions to use the lawnmower. Local regulations can restrict the age of the operator.
- Never mow while people, especially children, or pets are nearby.
- Keep in mind that the operator or user is responsible for accidents or hazards occurring to other people or their property.
- Do not carry passengers.
- All drivers should seek and obtain professional and practical instruction. Such instruction should emphasize:
  - the need for care and concentration when working with ride-on machines;
  - control of a ride-on machine sliding on a slope will not be regained by the application of the brake. The main reasons for loss of control are:
    - insufficient wheel grip;
    - being driven too fast;
    - inadequate braking;
    - the type of machine is unsuitable for its task;
    - lack of awareness of the effect of ground conditions, especially slopes;
    - incorrect hitching and load distribution.

Preparation

- While mowing, always wear substantial footwear and long trousers. Do not operate the equipment when barefoot or wearing open sandals.
- Thoroughly inspect the area where the equipment is to be used and remove all objects which may be thrown by the machine.
- **Warning**—Fuel is highly flammable.
  - Store fuel in containers specifically designed for this purpose.
  - Refuel outdoors only and do not smoke while refuelling.
  - Add fuel before starting the engine. Never remove the cap of the fuel tank or add fuel while the engine is running or when the engine is hot.

  - If fuel is spilled, do not attempt to start the engine but move the machine away from the area of spillage and avoid creating any source of ignition until fuel vapors have dissipated.
  - Replace all fuel tanks and container caps securely.
- Replace faulty silencers.
- Before using, always visually inspect to see that the blades, blade bolts and cutter assembly are not worn or damaged. Replace worn or damaged blades and bolts in sets to preserve balance.
- On multi-bladed machines, take care as rotating one blade can cause other blades to rotate.

Operation

- Do not operate the engine in a confined space where dangerous carbon monoxide fumes can collect.
- Mow only in daylight or in good artificial light.
- Before attempting to start the engine, disengage all blade attachment clutches and shift into neutral.
- Do not use on slopes of more than
  - 5° when mowing on side hills;
  - 10° when mowing uphill;
  - 15° when mowing downhill.
- Remember there is no such thing as a safe slope. Travel on grass slopes requires particular care. To guard against overturning:
  - do not stop or start suddenly when going up or downhill;
  - engage clutch slowly, always keep machine in gear, especially when travelling downhill;
  - machine speeds should be kept low on slopes and during tight turns;
  - stay alert for humps and hollows and other hidden hazards;
  - never mow across the face of the slope, unless the lawnmower is designed for this purpose.
- Use care when pulling loads or using heavy equipment.
  - Use only approved drawbar hitch points.
  - Limit loads to those you can safely control.
  - Do not turn sharply. Use care when reversing.
  - Use counterweight(s) or wheel weights when suggested in the instruction handbook.
- Watch out for traffic when crossing or near roadways.
- Stop the blades rotating before crossing surfaces other than grass.
- When using any attachments, never direct discharge of material toward bystanders nor allow anyone near the machine while in operation.
- Never operate the machine with damaged guards or without safety protective devices in place.
- Do not change the engine governor settings or overspeed the engine. Operating the engine at excessive speed can increase the hazard of personal injury.
- Before leaving the operator's position:
  - disengage the power take-off and lower the attachments;
  - change into neutral and set the parking brake;
  - stop the engine and remove the key.
- Disengage drive to attachments, stop the engine, and disconnect the spark plug wire(s) or remove the ignition key
  - before clearing blockages or unclogging chute;
  - before checking, cleaning or working on the lawnmower;
  - after striking a foreign object. Inspect the lawnmower for damage and make repairs before restarting and operating the equipment;
  - if the machine starts to vibrate abnormally (check immediately).
- Disengage drive to attachments when transporting or not in use.
- Stop the engine and disengage drive to attachment
  - before refuelling;
  - before removing the grass catcher;
  - before making height adjustment unless adjustment can be made from the operator's position.
- Reduce the throttle setting during engine run-out and, if the engine is provided with a shut-off valve, turn the fuel off at the conclusion of mowing.

Maintenance and Storage

- Keep all nuts, bolts and screws tight to be sure the equipment is in safe working condition.
- Never store the equipment with fuel in the tank inside a building where fumes can reach an open flame or spark.
- Allow the engine to cool before storing in any enclosure.

- To reduce the fire hazard, keep the engine, silencer, battery compartment and fuel storage area free of grass, leaves, or excessive grease.
- Check the grass catcher frequently for wear or deterioration.
- Replace worn or damaged parts for safety.
- If the fuel tank has to be drained, this should be done outdoors.
- On multi-bladed machines, take care as rotating one blade can cause other blades to rotate.
- When machine is to be parked, stored or left unattended, lower the cutting means unless a positive mechanical lock is used.

Toro Riding Mower Safety

The following list contains safety information specific to Toro products or other safety information that you must know that is not included in the CEN standard.

- Use only Toro-approved attachments. Warranty may be voided if used with unapproved attachments.

Sound Pressure Level

This unit has a maximum sound pressure level at the operator's ear of 87 dBA, based on measurements of identical machines per Directive 98/37/EC.

Sound Power Level

This unit has a guaranteed sound power level of 100 dBA, based on measurements of identical machines per Directive 2000/14/EC.

Vibration Level

This unit does not exceed a hand/arm vibration level of 4.5 m/s^2 based on measurements of identical machines per Directive 98/37/EC.

This unit does not exceed a whole body vibration level of 0.25 m/s^2 based on measurements of identical machines per Directive 98/37/EC.

Slope Chart

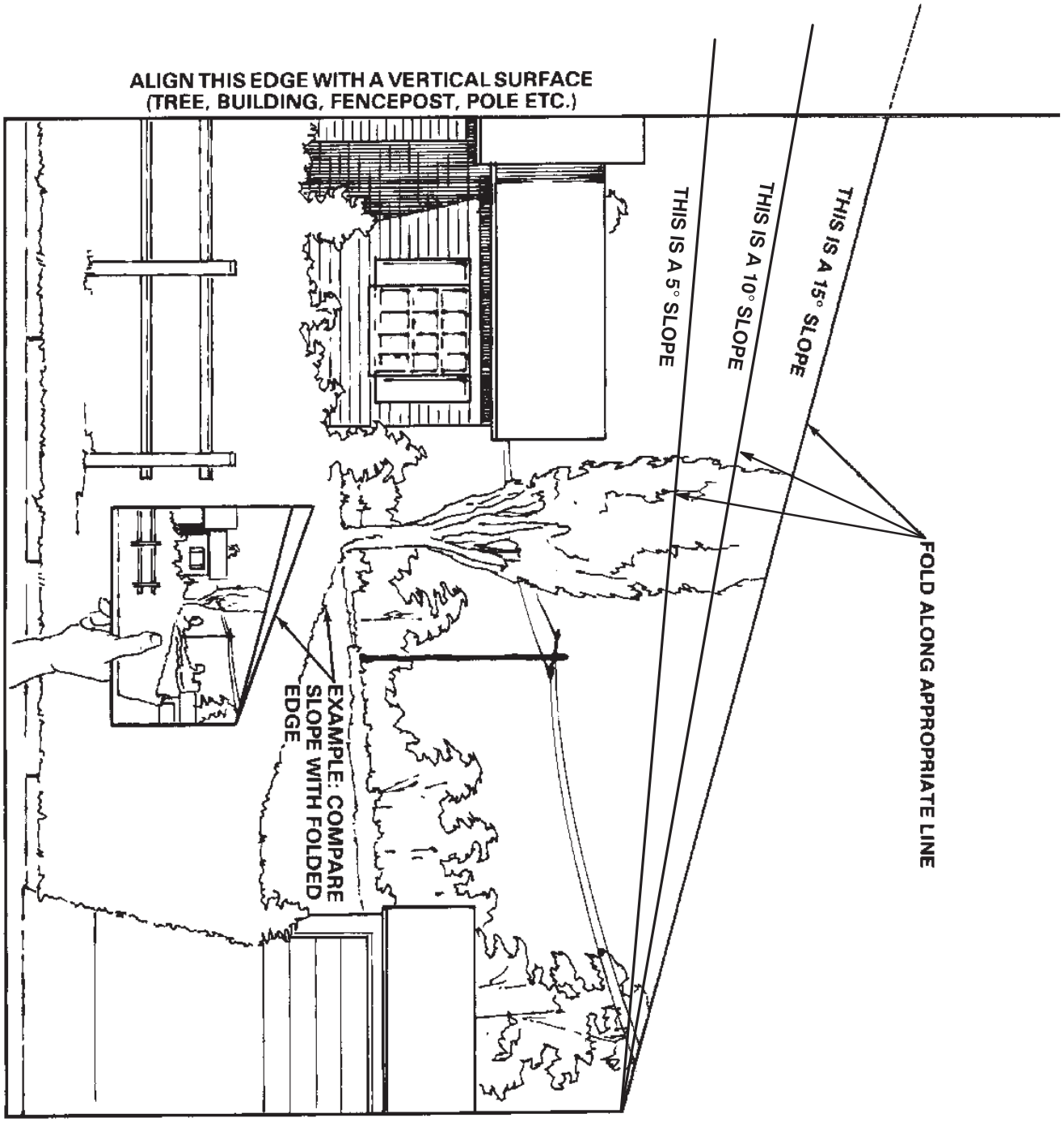
ALIGN THIS EDGE WITH A VERTICAL SURFACE
(TREE, BUILDING, FENCEPOST, POLE ETC.)
THIS IS A 5° SLOPE
THIS IS A 10° SLOPE
THIS IS A 15° SLOPE
FOLD ALONG APPROPRIATE LINE
EXAMPLE: COMPARE SLOPE WITH FOLDED EDGE

Safety and Instruction Decals

Safety decals and instructions are easily visible to the operator and are located near any area of potential danger. Replace any decal that is damaged or lost.



105-0529

1. Warning—do not touch the hot surface.



105-0530

1. Height of cut



106-1802

1. Warning—read the *Operator's Manual.*
2. Cutting hazard of hand—remove the ignition key and read the instructions before servicing or performing maintenance.
3. Thrown object hazard—keep bystanders a safe distance from the machine.
4. Tipping hazard—do not drive up a slope greater than 10 degrees.



105-0531

1. Disengage the cutting blade.



105-0532

1. Engage the cutting blade



105-0535

1. Grass collector full
2. Operating in reverse



106-2940

1. Warning—do not place you hands or feet under the mower.



106-2942

1. Turn the key to mow in reverse.

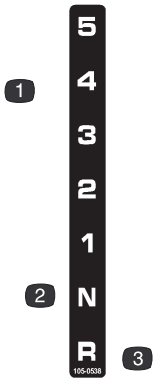

105-0538

1. Transmission speeds
2. Neutral
3. Reverse



106-2943

1. Thrown object and cutting hazards—do not operate the machine with the discharge opening uncovered; always operate the machine with the recycling cover, rear discharge deflector, or grass collector installed.

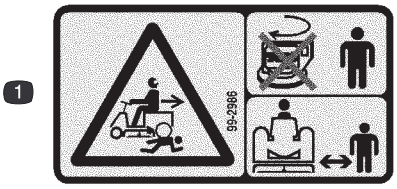

99-2986

1. Crushing/dismemberment hazard of bystanders—do not turn the key while children are present; keep children a safe distance from the machine.



106-2859

1. Clutch



Molded into the floor near the brake pedal

1. Brake



Molded into the floor near the parking brake lever

1. Parking brake



Molded into the body near the throttle control lever

1. Fast
2. Slow
3. Choke



Molded into the body near the ignition switch

1. Engine

Gasoline and Oil

Recommended Gasoline

Use UNLEADED Regular Gasoline suitable for automotive use (85 pump octane minimum). Leaded regular gasoline may be used if unleaded regular is not available.

Important Never use methanol, gasoline containing methanol, or gasohol containing more than 10% ethanol because the fuel system could be damaged. Do not mix oil with gasoline.

Danger

In certain conditions, gasoline is extremely flammable and highly explosive. A fire or explosion from gasoline can burn you and others and can damage property.

- **Fill the fuel tank outdoors, in an open area, when the engine is cold. Wipe up any gasoline that spills.**
- **Do not fill the fuel tank completely full. Add gasoline to the fuel tank until the level is 1/4 to 1/2 in. (6 to 13 mm) below the bottom of the filler neck. This empty space in the tank allows gasoline to expand.**
- **Never smoke when handling gasoline, and stay away from an open flame or where gasoline fumes may be ignited by a spark.**
- **Store gasoline in an approved container and keep it out of the reach of children. Never buy more than a 30-day supply of gasoline.**
- **Always place gasoline containers on the ground away from your vehicle before filling.**
- **Do not fill gasoline containers inside a vehicle or on a truck or trailer bed because interior carpets or plastic truck bed liners may insulate the container and slow the loss of any static charge.**
- **When practical, remove gas-powered equipment from the truck or trailer and refuel the equipment with its wheels on the ground.**
- **If this is not possible, then refuel such equipment on a truck or trailer from a portable container, rather than from a gasoline dispenser nozzle.**
- **If a gasoline dispenser nozzle must be used, keep the nozzle in contact with the rim of the fuel tank or container opening at all times until fueling is complete.**

Using Stabilizer/Conditioner

Use a fuel stabilizer/conditioner in the machine to provide the following benefits:

- Keeps gasoline fresh during storage of 90 days or less. For longer storage, drain the fuel tank.
- Cleans the engine while it runs
- Eliminates gum-like varnish buildup in the fuel system, which causes hard starting

Important Do not use fuel additives containing methanol or ethanol.

Add the correct amount of gas stabilizer/conditioner to the gas.

Note: A fuel stabilizer/conditioner is most effective when mixed with fresh gasoline. To minimize the chance of varnish deposits in the fuel system, use fuel stabilizer at all times.

Filling the Fuel Tank

1. Shut the engine off and set the parking brake.
2. Clean around the fuel tank cap and remove the cap. Add unleaded regular gasoline to the fuel tank until the level is 1/4 to 1/2 in. (6 to 13 mm) below the bottom of the filler neck. This space in the tank allows gasoline to expand. Do not fill the fuel tank completely full.
3. Install the fuel tank cap securely. Wipe up any gasoline that may have spilled.

Checking the Engine Oil Level

Before you start the engine and use the machine, check the oil level in the engine crankcase; refer to Checking the Oil Level, page 20.

Operation

Note: Determine the left and right sides of the machine from the normal operating position.

Think Safety First

Please carefully read all of the safety instructions and decals in the safety section. Knowing this information could help you, your family, pets, or bystanders avoid injury.

Controls

Become familiar with all of the controls before you start the engine and operate the machine.

Parking Brake

Always set the parking brake when you stop the machine or leave it unattended.

Setting the Parking Brake

1. Push the brake pedal (Fig. 2) down and hold it in the depressed position.
2. Lift the parking brake lever (Fig. 2) up and gradually take your foot off of the brake pedal. The brake pedal should stay in the depressed (locked) position.

Releasing the Parking Brake

1. Push down on the brake pedal (Fig. 2) and hold it in the depressed position.
2. Push the parking brake lever (Fig. 2) down and gradually release the brake pedal.

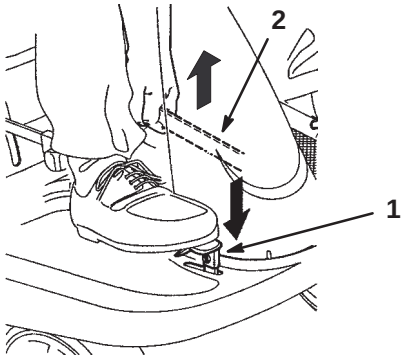

Figure 2

1. Brake pedal
2. Parking brake lever

Positioning the Seat

The seat can move forward and backward. Position the seat where you have the best control of the machine and are most comfortable.

1. Raise the seat and loosen the 4 bolts (Fig. 3).
2. Move the seat to the desired position and tighten the bolts.

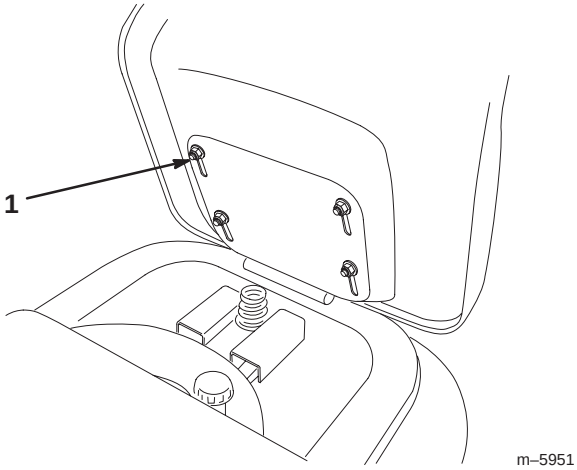

Figure 3

1. Bolt

Using the Blade Control (PTO)

The blade control (PTO) engages and disengages power to the blade.

Engaging the Blade

1. Depress the brake pedal to stop the machine.
2. Slowly move the blade control (PTO) to Engaged (Fig. 4).

Disengaging the Blade

1. Depress the brake pedal to stop the machine.
2. Move the PTO to Disengaged (Fig. 4).

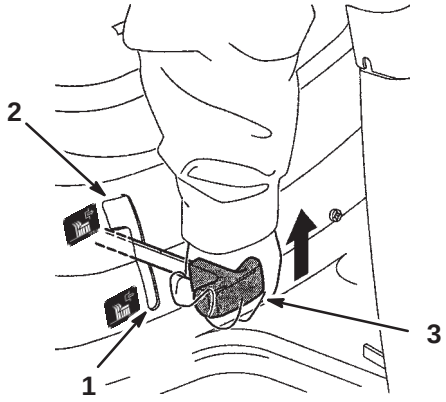

Figure 4

1. Disengaged
2. Engaged
3. Blade control (PTO)

Setting the Height of Cut

The height-of-cut lever (deck lift) is used to raise and lower the mower to the desired cutting height. The cutting height may be set in one of 4 positions from approximately 3.8 to 9 cm.

1. Disengage the PTO.

2. Pull on the height-of-cut lever (deck lift), move it to the desired position, and release the lever slowly until it sticks in the notch (Fig. 5).

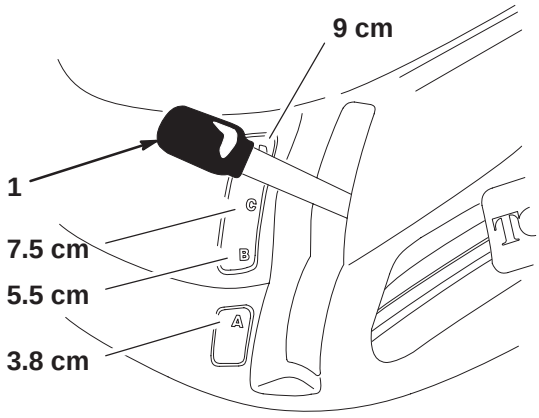

Figure 5

1. Height-of-cut lever (deck lift)

Starting and Stopping the Engine

Starting

1. Sit down on the seat.

2. Set the parking brake; refer to Setting the Parking Brake, page 12.

Note: The engine will not start unless you engage the parking brake.

3. Move the ground speed selector into neutral (N) (Fig. 6).

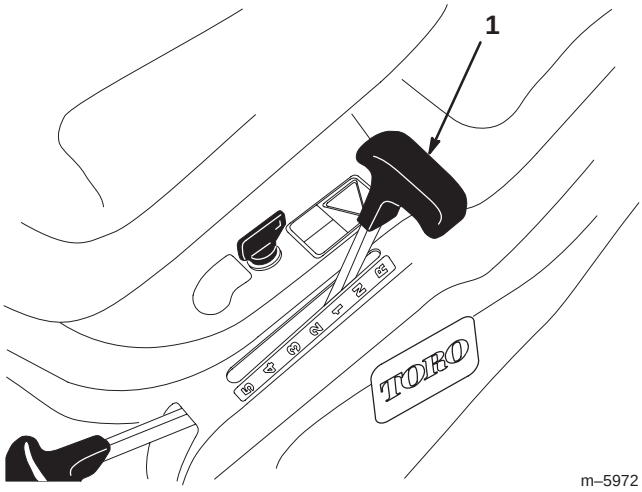

Figure 6

1. Ground speed selector

4. Move the PTO to Disengaged (Fig. 7).

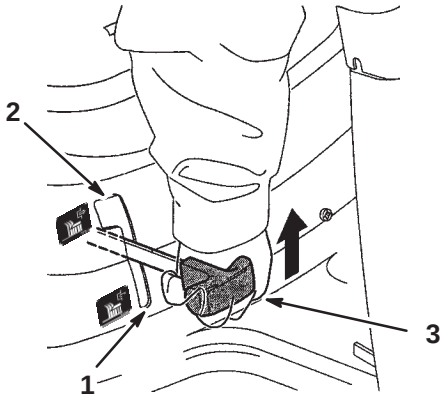

Figure 7

1. Disengaged
2. Engaged
3. Blade control (PTO)

5. Move the throttle lever to Choke (Fig. 8).

Note: An engine that has been running and is warm may not require step 5.

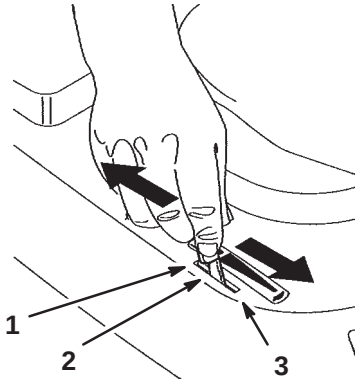

Figure 8

1. Choke
2. Fast
3. Slow

6. Turn the ignition key clockwise and hold it in the Start position (Fig. 9). When the engine starts, release the key.

Important If the engine does not start after 30 seconds of continuous cranking, turn the ignition key to Stop and let the starter motor cool; refer to Troubleshooting, page 31.

7. After the engine starts, slowly move the throttle lever to Fast (Fig. 8). If the engine stalls or hesitates, move the throttle lever back to Choke for a few seconds. Then move the throttle lever to Fast. Repeat this as required.

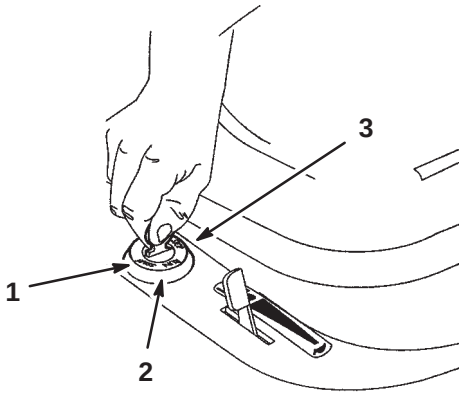

Figure 9

1. Start
2. Run
3. Stop

Stopping

1. Move the throttle lever to Slow (Fig. 8).

2. Turn the ignition key to Stop (Fig. 9).

The Safety Interlock System

Caution

If safety interlock switches are disconnected or damaged the machine could operate unexpectedly causing personal injury.

- **Do not tamper with the interlock switches.**
- **Check the operation of the interlock switches daily and replace any damaged switches before operating the machine.**

Understanding the Safety Interlock System

The safety interlock system is designed to prevent the engine from starting unless:

- The power-take-off (PTO) is Off.
- The operator is seated.
- The brake pedal is depressed.

The safety system is designed to stop the engine if:

- You rise from the seat when the clutch/brake pedal is released.
- You rise from the seat when the PTO is Engaged.
- You shift into reverse with the PTO engaged and the operating-in-reverse interlock not deactivated.

Setting the KeyChoice® Switch to Operate in Reverse

An interlock feature on the tractor prevents the power take off (PTO) from operating when backing up. If you shift into reverse with the PTO engaged (i.e., with mower blades or other attachment running), the engine will stop. **Do not mow in reverse unless absolutely necessary.**

If you need to use the PTO while backing up, you can turn off this interlock feature using the KeyChoice switch located near the seat bracket (Fig. 10).

Danger

You could back over a child or bystander while the mower blade or other attachment is engaged and cause serious injury or death.

- **Do not mow in reverse unless absolutely necessary.**
- **Do not insert the KeyChoice key unless it is absolutely necessary.**
- **Always look backward and down before backing up.**
- **Use the KeyChoice switch only if you are certain no children or other bystanders will enter the mowing area.**
- **Be very observant after deactivating the interlock because the sound of the engine may prevent you from noticing that a child or bystander has entered the work area.**
- **Always remove both the ignition and KeyChoice keys and put them in a safe place out of the reach of children or unauthorized users when leaving the unit unattended.**

1. Engage the PTO.

2. Insert the KeyChoice key into the switch (Fig. 10).

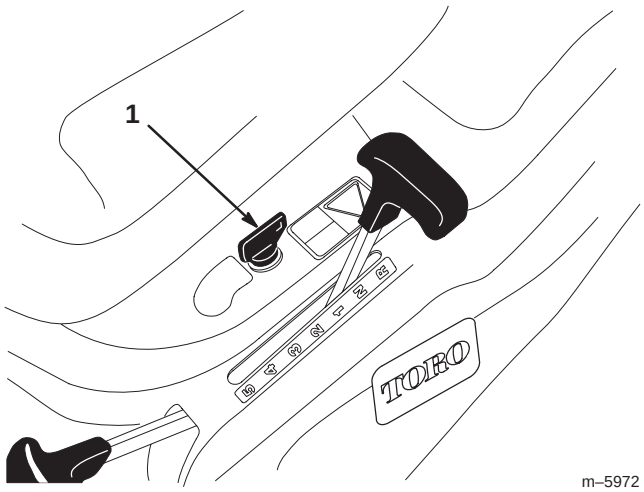

m–5972

Figure 10

1. KeyChoice switch

3. Turn the KeyChoice key.

A red light on the front console (Fig. 11) turns on, indicating that the interlock is disabled.

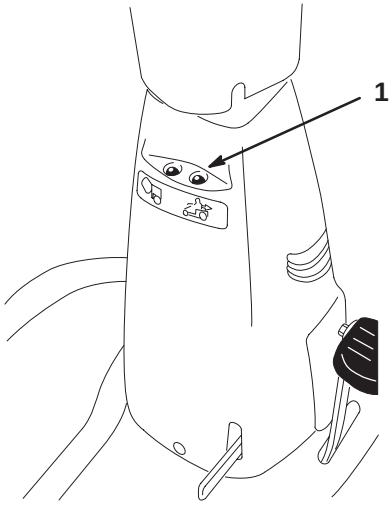

m–5974

Figure 11

1. Operating-in-reverse light

4. Shift into reverse and complete your task.

5. Stop the PTO or the engine to activate the interlock.

6. Remove the KeyChoice key and put it in a safe place out of reach of children.

Testing the Safety Interlock System

Test the safety interlock system before you use the machine each time. If the safety system does not operate as described below, have an Authorized Service Dealer repair the safety system immediately.

1. Move the gear shift into neutral.

2. Move the PTO lever to Engage. Sit on the seat and rotate the ignition key to Start; the engine should not crank. If it does, the interlock system is malfunctioning, and it must be repaired by an Authorized Service Dealer. If the engine does not crank, proceed to step 3.

3. Move the PTO lever to Disengage. Sit on the seat, depress the brake and clutch pedals, engage the parking brake, and shift into gear. Rotate the ignition key to Start; the engine should not crank. If it does, the interlock system is malfunctioning and must be repaired by an Authorized Service Dealer. If the engine does not crank, proceed to step 4.

4. Sit on the seat, move the gear shift into neutral, and the PTO lever to Disengage. Ensure that the parking brake is engaged. Rotate the ignition key to Start; the engine should start and continue to run. Then engage the PTO lever and carefully rise from the seat; the engine should stop. If the engine does not stop running, shut the engine off and have the interlock system repaired by an Authorized Service Dealer. If the engine shuts off when you rise from the seat, the interlock system is functioning correctly and the tractor can be operated safely.

5. Put the PTO lever in the Disengage position and the gear shifter in neutral. Start the engine. While the engine is running, move the PTO lever to the Engage position, push in the clutch, and put the gear shifter in reverse. The engine should stop.

6. Put the PTO lever in the Disengage position and the gear shifter in neutral. Start the engine. Move the PTO lever to the Engage position and turn the KeyChoice key and release it. The KeyChoice warning light should illuminate. Move the PTO lever to the Disengage position and the KeyChoice warning light should turn off.

Driving Forward or Backward

The throttle control regulates the engine speed as measured in RPM (revolutions per minute).

To go forward or backward, depress the brake pedal. Move the ground speed selector to the desired forward speed or reverse. As you slowly release the pedal, the machine will begin to move. Steer the machine with the steering wheel.

Caution

Sudden release of the clutch pedal could cause you to lose control and suddenly put the machine in motion.

Always release the clutch pedal slowly when starting the machine in motion.

Selecting Ground Speeds

Important To avoid transmission damage, always depress the brake pedal before shifting into or out of reverse.

Always start the machine in motion by depressing the brake pedal and shifting into the desired speed. Once the machine is in motion, you can shift into any forward speed without depressing the brake pedal. In most conditions, the machine is powerful enough to move out in any speed. If it will not move out in a selected speed due to a heavy load, use a lower speed.

Important Do not shift on slopes. Choose a slow speed so that you will not have to stop or shift while on the slope.

Stopping the Machine

To stop the machine, depress the brake pedal, shift into neutral, disengage the PTO, and turn the ignition key to Off to stop the engine. Also set the parking brake if you leave the machine unattended; refer to Setting the Parking Brake, page 12. Remember to remove the key from the ignition switch.

Caution

Children or bystanders may be injured if they move or attempt to operate the tractor while it is unattended.

Always remove the ignition key and set the parking brake when leaving the machine unattended, even if just for a few minutes.

Important To prevent excessive wear, do not “Ride the Brakes.” Shift to a lower speed for slower ground speed. Choose a slow speed so that you will not have to stop or shift while on the slope.

Emptying the Grass Collector

When the collector warning light on the front console comes on, the grass collector is full and must be emptied.

1. Disengage the PTO.
2. Pull the collector rod forward to tilt the collection bin (Fig. 12).
3. Shake the collection bin until it is completely empty.
4. Slowly return the collection rod to the operating position.

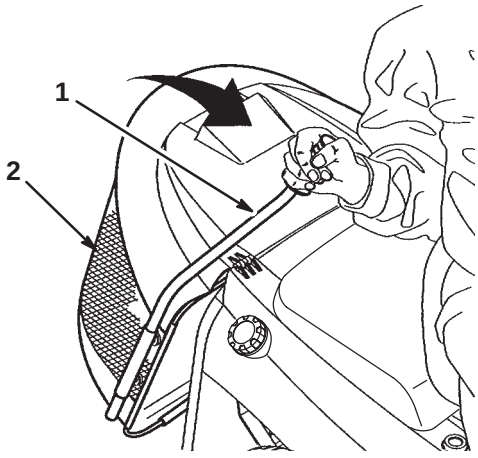

Figure 12

1. Collector rod
2. Collection bin

Pushing the Machine by Hand

Important Always push the machine by hand. Never tow the machine because transaxle damage may occur.

1. Shift into neutral, disengage the PTO, stop the engine, and remove the ignition key.
2. Disengage the parking brake to push the machine.

Installing the Recycler® Cover

A Recycler cover is included with the tractor. It is used when you do not wish to bag grass clippings.

Danger

Without the grass deflector, discharge cover, or complete grass catcher assembly mounted in place, you and others are exposed to blade contact and thrown debris. Contact with the rotating mower blade(s) and thrown debris will cause injury or death.

- **Never remove the grass deflector from the mower because the grass deflector routes material down toward the turf. If the grass deflector is ever damaged, replace it immediately.**
- **Never put your hands or feet under the mower.**
- **Never try to clear the discharge area or mower blades unless you move the power take off (PTO) to Off and rotate the ignition key to Off. Also remove the key and pull the wire off of the spark plug(s).**

1. Park the machine on a level surface, disengage the PTO, shift into neutral, set the parking brake, stop the engine, and remove the ignition key.
2. Raise the grass collector and remove the bolt securing the discharge tube to the rear plate.
3. Move the height of cut lever into the B or C position. Remove the 3 screws, washers, and nuts attaching the discharge chute to the mower (Fig. 13).
4. Remove the bolt, washer, and nut attaching the discharge chute to the discharge tube (Fig. 13).
5. Move the height of cut lever to the lowest position. Slide the discharge chute out from beneath the tractor.

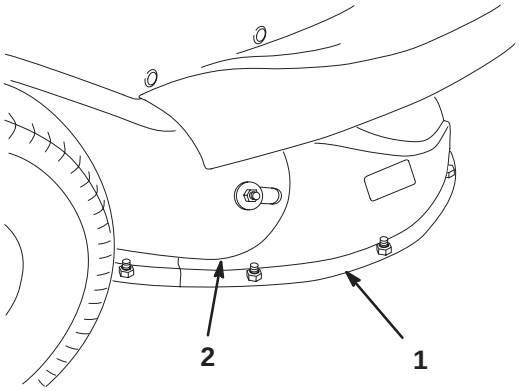

Figure 13

1. Discharge chute
2. Discharge tube

6. Attach the Recycler cover with 4 screws, washers, and nuts.
7. Secure the discharge tube to the rear plate with the bolt previously removed.

Tips for Mowing Grass

Fast Throttle Setting

For best mowing and maximum air circulation, operate the engine at Fast. Air is required to thoroughly cut grass clippings, so do not set the height-of-cut too low or totally surround the mower by uncut grass. Always try to have one side of the mower free from uncut grass, which allows air to be drawn into the mower.

Using the Mower for the First Time

Cut the grass slightly longer than normal to ensure that the cutting height of the mower does not scalp any uneven ground. However, the cutting height used in the past is generally the best one to use. When cutting grass longer than 15 cm tall, you may want to cut the lawn twice to ensure an acceptable quality of cut.

Cut 1/3 of the Grass Blade

It is best to cut only about 1/3 of the grass blade. Cutting more than that is not recommended, unless grass is sparse or it is late fall when grass grows more slowly.

Mowing Direction

Alternate mowing direction to keep the grass standing straight. This also helps disperse clippings which enhances decomposition and fertilization.

Mow at Correct Intervals

Normally, mow every 4 days. But remember, grass grows at different rates at different times. So to maintain the same cutting height, which is a good practice, mow more often in early spring. As the grass growth rate slows in mid summer, mow less frequently. If you cannot mow for an extended period, first mow at a high cutting height; then mow again 2 days later at a lower height setting.

Avoid Cutting Too Low

If the cutting width of the mower is wider than the mower you previously used, raise the cutting height one notch to ensure uneven turf is not cut too short.

Long Grass

If the grass is ever allowed to grow slightly longer than normal, or if it contains a high degree of moisture, raise the cutting height higher than usual and cut the grass at this setting. Then cut the grass again using the lower, normal setting.

When Stopping

If the machine must be stopped while mowing, a clump of grass clippings may drop onto your lawn. To avoid this:

1. With the blade Engaged, move onto a previously cut area.
2. To disperse the clippings evenly, raise the mower one or two height-of-cut settings while driving forward with the blade Engaged.

Keep the Underside of the Mower Clean

Use the washout port to clean clippings and dirt from the underside of the mower after each use. If grass and dirt build up inside the mower, cutting quality will eventually become unsatisfactory.

Blade Maintenance

Maintain a sharp blade throughout the cutting season because a sharp blade cuts cleanly without tearing or shredding the grass blades. Tearing and shredding turns grass brown at the edges, which slows growth and increases the chance of disease. Every 30 days, check the cutter blade for sharpness and file down any nicks.

Maintenance

Note: Determine the left and right sides of the machine from the normal operating position.

Recommended Maintenance Schedule

Maintenance Service Interval	Maintenance Procedure
After first 5 hours of use	• Change the engine oil.
Each use	• Check the tire pressure. • Check the engine oil level. • Check the safety system. • Clean the mower housing. • Check the parking brake. • Check for loose parts.
Every 5 hours	• Check the cutting blade.
Every 25 hours	• Grease the front wheels.[1] • Service the foam air cleaner.[1] • Check the spark plug.
Every 50 hours	• Change the engine oil.[2] • Check the battery electrolyte.
Every 100 hours	• Service the paper air cleaner.[1] • Replace the spark plug. • Replace the fuel filter. • Clean the cooling system.[1]
Before storage	• Perform all of the maintenance procedures listed above. • Drain the fuel tank. • Paint chipped surfaces. • Charge the battery and disconnect the cables.
After storage	• Check the safety system. • Check the spark plug. • Check the battery electrolyte. • Check the tire pressure.

[1]More often in dusty, dirty conditions

[2]More often when operating the engine under heavy load or in high temperatures

Important Refer to your engine operator's manual for additional maintenance procedures.

Caution

If you leave the key in the ignition switch, someone could accidently start the engine and seriously injure you or other bystanders.

Remove the key from the ignition and disconnect the wire from the spark plug before you do any maintenance. Set the wire aside so that it does not accidentally contact the spark plug.

Servicing the Engine Oil

Check the oil level daily or after every 8 hours.

Change the oil after the first 5 operating hours and every 50 operating hours thereafter.

Note: Change the oil more frequently when operating conditions are extremely dusty or sandy.

Oil Type: Detergent oil (API service SF, SG, SH, SJ, or higher)

Crankcase Capacity: 48 oz./1-1/2 qt. (1400 cc/1.4 l)

Viscosity: See the table below.

USE THESE SAE VISCOSITY OILS

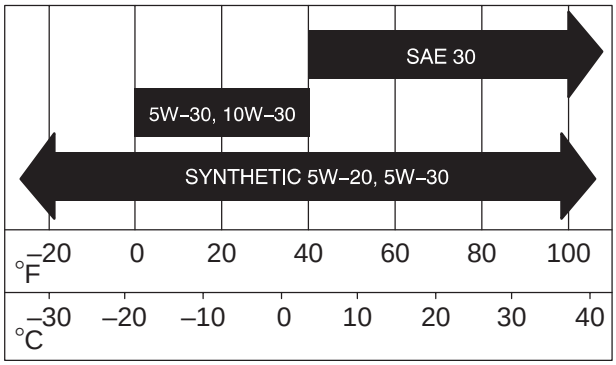

Checking the Oil Level

1. Park the machine on a level surface, disengage the PTO, shift into neutral, set the parking brake, stop the engine, and remove the ignition key.
2. Raise the seat.
3. Clean around the oil dipstick (Fig. 14) so that dirt cannot fall into the filler hole and damage the engine.

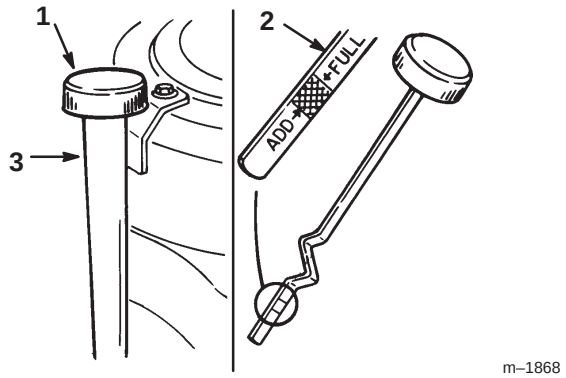

Figure 14

1. Oil dipstick
2. Metal end
3. Filler tube

4. Unscrew the oil dipstick and wipe the metal end clean (Fig. 14).
5. Screw the oil dipstick fully onto the filler tube (Fig. 14). Unscrew the dipstick again and look at the metal end. If the oil level is low, slowly pour only enough oil into the filler tube to raise the level to the Full mark on the dipstick.

Important Do not overfill the crankcase with oil because the engine may be damaged.

Changing and Draining the Oil

1. Start the engine and let it run for five minutes. This warms the oil so that it drains better.
2. Park the machine so that the right front side is slightly lower than the left side to ensure that the oil drains completely. Then disengage the PTO, shift into neutral, set the parking brake, stop the engine, and remove the ignition key.
3. Raise the seat.
4. Slide the draining funnel underneath the oil dipstick/fill tube (Fig. 15).
5. Place a pan below the draining funnel and remove the drain plug (Fig. 15).

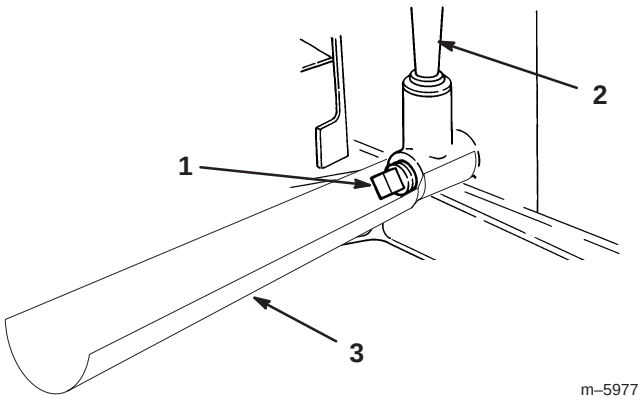

Figure 15

1. Oil drain plug
2. Oil dipstick/fill tube
3. Draining funnel

6. When the oil has drained completely, remove the draining funnel and install the drain plug.

Note: Dispose of the used oil at a certified recycling center.

7. Slowly pour approximately 80% of the specified amount of oil into the filler tube (Fig. 14). Check the oil level; refer to Checking the Oil Level, page 20, steps 4–5.

Servicing the Battery

Always keep the battery clean and fully charged. Use a paper towel to clean the battery and battery box. If the battery terminals are corroded, clean them with a solution of four parts water and one part baking soda. Apply a light coating of grease to the battery terminals to prevent corrosion.

Voltage: 12 v, 155 Cold Cranking Amps

Removing the Battery

Warning

Battery terminals or metal tools could short against metal tractor components causing sparks. Sparks can cause the battery gasses to explode, resulting in personal injury.

- **When removing or installing the battery, do not allow the battery terminals to touch any metal parts of the tractor.**
- **Do not allow metal tools to short between the battery terminals and metal parts of the tractor.**

1. Disengage the PTO, shift into neutral, set the parking brake, stop the engine, and remove the ignition key.
2. Remove the engine cover.
3. Disconnect the negative (black) ground cable from the battery post.

Warning

Incorrect battery cable routing could damage the tractor and cables causing sparks. Sparks can cause the battery gasses to explode, resulting in personal injury.

- **Always *disconnect* the negative (black) battery cable before disconnecting the positive (red) cable.**
- **Always *connect* the positive (red) battery cable before connecting the negative (black) cable.**

4. Slide the rubber cover up the positive (red) cable. Disconnect the positive (red) cable from the battery post.
5. Remove the battery from the battery box.

Installing the Battery

1. Put the battery into the battery box in the chassis.
2. Using the bolt, washers, and nut, connect the positive (red) cable to the positive (+) battery post. Slide the rubber cover over the battery post.
3. Using the bolt, washers, and nut, connect the negative (black) cable to the negative (–) battery post.
4. Install the engine cover.

Checking the Electrolyte Level

1. Remove the engine cover.
2. Look at the side of the battery. The electrolyte must be up to the Upper line (Fig. 16). Do not allow the electrolyte to fall below the Lower line (Fig. 16).
3. If the electrolyte is low, add the required amount of distilled water; refer to Adding Water to the Battery, page 22.

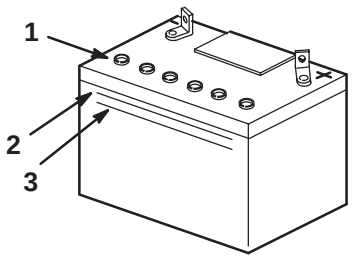

Figure 16

1. Vent caps
2. Upper line
3. Lower line

Danger

Battery electrolyte contains sulfuric acid which is a deadly poison and causes severe burns.

- **Do not drink electrolyte and avoid contact with skin, eyes or clothing. Wear safety glasses to shield your eyes and rubber gloves to protect your hands.**
- **Fill the battery where clean water is always available for flushing the skin.**

Adding Water to the Battery

The best time to add distilled water to the battery is just before you operate the machine. This lets the water mix thoroughly with the electrolyte solution.

1. Remove the battery from the tractor; refer to Removing the Battery, page 21.
2. Clean the top of the battery with a paper towel.

Important Never fill the battery with distilled water while the battery is installed in the tractor. Electrolyte could be spilled on other parts and cause corrosion.

3. Remove the vent caps from the battery (Fig. 16).
4. Slowly pour distilled water into each battery cell until the electrolyte level is up to the Upper line (Fig. 16) on the battery case.

Important Do not overfill the battery because electrolyte (sulfuric acid) can cause severe corrosion and damage to the chassis.

5. Wait five to ten minutes after filling the battery cells. Add distilled water, if necessary, until the electrolyte level is up to the Upper line (Fig. 16) on the battery case.
6. Install the battery vent caps.

Charging the Battery

Warning

Charging the battery produces gasses that can explode.

Never smoke near the battery and keep sparks and flames away from battery.

Important Always keep the battery fully charged (1.260 specific gravity). This is especially important to prevent battery damage when the temperature is below 32°F (0°C).

1. Remove the battery from the chassis; refer to Removing the Battery, page 21.
2. Check the electrolyte level; refer to Checking the Electrolyte Level, page 21.
3. Make sure that the vent caps are installed in the battery. Charge the battery for 1 hour at 25 to 30 amps or 6 hours at 4 to 6 amps. Do not overcharge the battery.
4. When the battery is fully charged, unplug the charger from the electrical outlet, then disconnect the charger leads from the battery posts (Fig. 17).

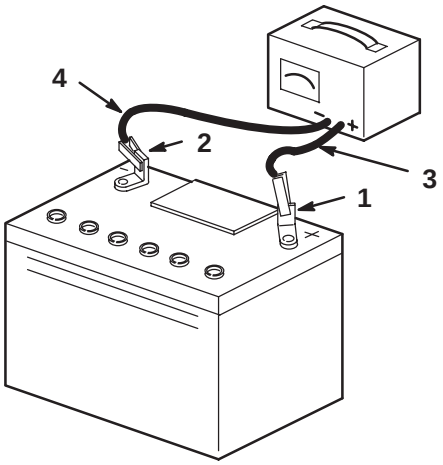

Figure 17

1. Positive battery post
2. Negative battery post
3. Red (+) charger lead
4. Black (–) charger lead

5. Install the battery in the tractor and connect the battery cables; refer to Installing the Battery, page 21.

Note: Do not run the tractor with the battery disconnected. Electrical damage may occur.

Servicing the Air Cleaner

Foam Element: Clean and oil after every 25 operating hours.

Paper Element: Replace after every 100 operating hours or yearly, whichever occurs first.

Note: Service the air cleaner more frequently (every few hours) if operating conditions are extremely dusty or sandy.

Removing the Foam and Paper Elements

1. Disengage the PTO, shift into neutral, set the parking brake, stop the engine, and remove the ignition key.

2. Remove the engine cover.

3. Clean around the air cleaner to prevent dirt from getting into the engine and causing damage. Unscrew the knob and remove the air cleaner cover (Fig. 18).

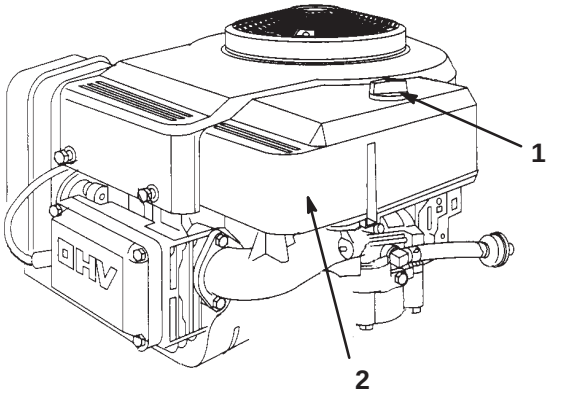

m–1884

Figure 18

1. Knob
2. Air cleaner cover

4. Carefully slide the foam element off of the paper element (Fig. 19).

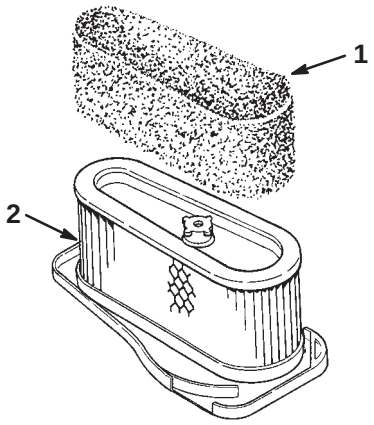

m–1864

Figure 19

1. Foam element
2. Paper element

5. Unscrew the rubber nut and remove the paper element (Fig. 20).

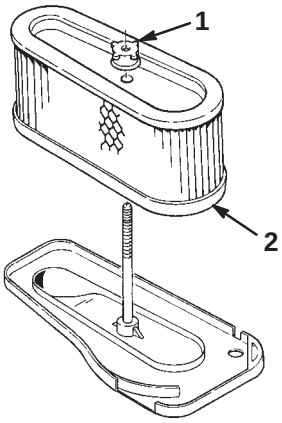

m–1865

Figure 20

1. Rubber nut
2. Paper element

Cleaning the Foam and Paper Elements

1. Foam Element

A. Wash the foam element in liquid soap and warm water. When the element is clean, rinse it thoroughly.

B. Dry the element by squeezing it in a clean cloth.

C. Put one or two ounces of oil on the element (Fig. 21). Squeeze the element to distribute the oil.

Important Replace the foam element if it is torn or worn.



m–1866

Figure 21

1. Foam element 2. Oil

2. Paper Element

A. Lightly tap the element on a flat surface to remove dust and dirt (Fig. 22).

B. Inspect the element for tears, an oily film, and damage to the rubber seal.

Important Never clean the paper element with pressurized air or liquids, such as solvent, gas, or kerosene. Replace the paper element if it is damaged or cannot be cleaned thoroughly.

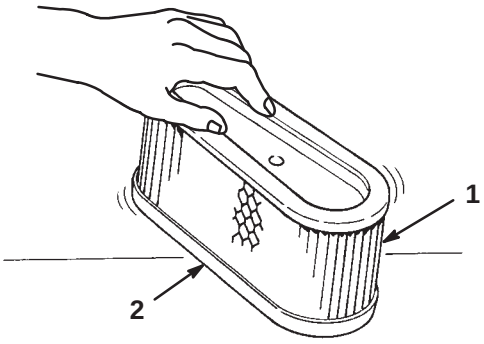

m–1867

Figure 22

1. Paper element 2. Rubber seal

Installing the Foam and Paper Elements

Important To prevent engine damage, always operate the engine with the complete foam and paper air cleaner assembly installed.

1. Carefully slide the foam element onto the paper air cleaner element (Fig. 19).

2. Slide the air cleaner assembly onto the long rod. Screw the rubber nut finger-tight against the air cleaner (Fig. 20).

Note: Make sure that the rubber seal is flat against the air cleaner base.

3. Install the air cleaner cover and knob (Fig. 18). Tighten the knob snugly.

4. Install the engine cover.

Servicing the Spark Plug

Install a new spark plug after every 100 operating hours. Check the spark plug after every 25 operating hours. Make sure that the air gap between the center and side electrodes is correct before installing the spark plug. Use a spark plug wrench for removing and installing the spark plug and a gapping tool/feeler gauge to check and adjust the air gap.

Type: Champion RJ-19LM (or equivalent)

Air Gap: 0.030 in. (0.762 mm)

Removing the Spark Plug

1. Disengage the PTO, shift into neutral, set the parking brake, stop the engine, and remove the ignition key.

2. Reach under the body of the tractor above the left rear wheel and pull the wire off of the spark plug (Fig. 23). Clean around the spark plug to prevent dirt from falling into the engine and potentially causing damage.

3. Remove the spark plug and metal washer.

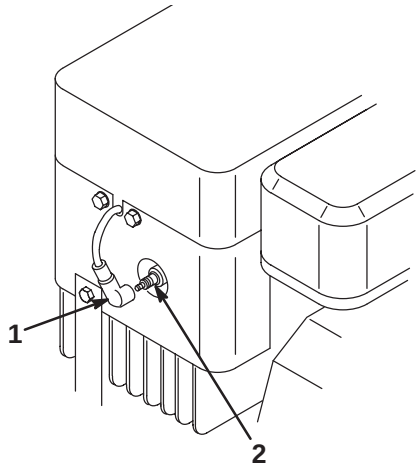

m–1884

Figure 23

1. Spark plug wire 2. Spark plug

Checking the Spark Plug

1. Look at the center of the spark plug (Fig. 24). If you see light brown or gray on the insulator, the engine is operating properly. A black coating on the insulator usually means the air cleaner is dirty.

Important Never clean the spark plug. Always replace the spark plug when it has a black coating, worn electrodes, an oily film, or cracks.

2. Check the gap between the center and side electrodes (Fig. 24). Bend the side electrode (Fig. 24) if the gap is not correct.

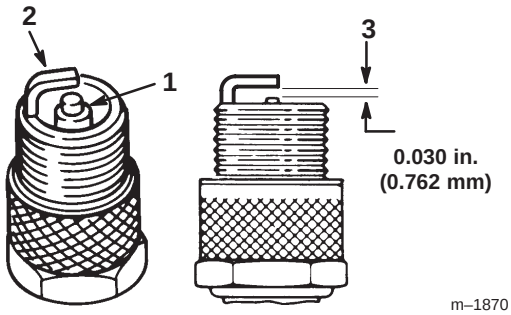

Figure 24

1. Center electrode insulator
2. Side electrode
3. Air gap (not to scale)

Installing the Spark Plug

1. Install the spark plug and metal washer. Make sure that the air gap is set correctly.
2. Tighten the spark plug to 15 ft.-lb. (20 N·m).
3. Push the wire onto the spark plug (Fig. 23).

Checking the Tire Pressure

Maintain the air pressure in the front tires at 150 kPa and in the rear ties at 200 kPa. Check the tire pressure after each use. Check the tires when they are cold to get the most accurate pressure reading.

Greasing and Lubrication

Grease the machine after every 25 operating hours or once a year, whichever occurs first. Grease more frequently when operating conditions are extremely dusty or sandy.

Grease Type: General-purpose grease

1. Disengage the PTO, shift into neutral, set the parking brake, stop the engine, and remove the ignition key.
2. Lubricate the front wheels.
3. Wipe up any excess grease.

Checking the Parking Brake

Always set the parking brake when you stop the machine or leave it unattended. Check the parking brake daily to ensure that it holds securely.

1. Park the machine on a level surface, disengage the PTO, set the parking brake, stop the engine, and remove the ignition key.
2. If the rear wheels lock and skid when you try to push the tractor forward, no adjustment is required. If the rear wheels turn and do not lock, an adjustment is needed; see an Authorized Service Dealer.

Draining the Fuel Tank

Danger

In certain conditions, gasoline is extremely flammable and highly explosive. A fire or explosion from gasoline can burn you and others and can damage property.

- **Drain gasoline from the fuel tank when the engine is cold. Do this outdoors in an open area. Wipe up any gasoline that spills.**
- **Never smoke when draining gasoline, and stay away from an open flame or where a spark may ignite the gasoline fumes.**

1. Park the machine so that the left side is slightly lower than the right side to ensure that the fuel tank drains completely. Disengage the PTO, shift into neutral, set the parking brake, stop the engine, and remove the ignition key.
2. Remove the engine cover.
3. Squeeze the ends of the hose clamp together and slide it up the fuel line toward the fuel tank.
4. Pull the fuel line off of the filter (Fig. 25) and allow gasoline to drain into a gas can or drain pan.

Note: Now is the best time to install a new fuel filter because the fuel tank is empty.

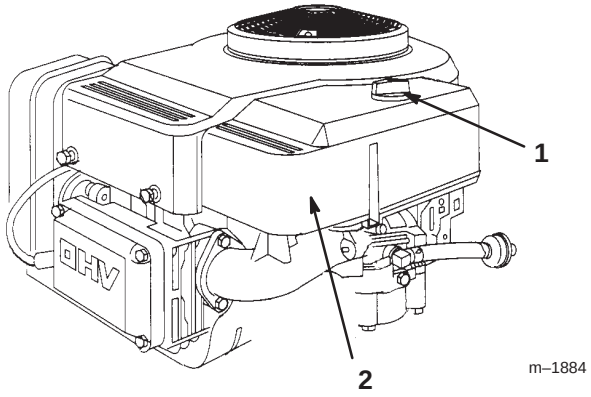

Figure 25

1. Fuel filter

5. Install the fuel line onto the filter. Slide the hose clamp close to the filter to secure the fuel line and filter.
6. Install the engine cover.

Replacing the Fuel Filter

Replace the fuel filter after every 100 operating hours or yearly, whichever occurs first.

The best time to replace the fuel filter (Fig. 25) is when the fuel tank is empty. Never install a dirty filter if it is removed from the fuel line.

1. Disengage the PTO, shift into neutral, set the parking brake, stop the engine, and remove the ignition key.
2. Remove the engine cover.
3. Squeeze the ends of the hose clamps together and slide them away from the filter (Fig. 25).
4. Remove the filter from the fuel lines.
5. Install a new filter and move the hose clamps close to the filter.
6. Install the engine cover.

Servicing the Fuses

The electrical system is protected by fuses. No maintenance is required, however, if a fuse blows, check the circuit wiring for a short. To replace a fuse (Fig. 26), pull out to remove it from the socket. Push down to insert it.

Fuses: 7.5 amp, blade-type

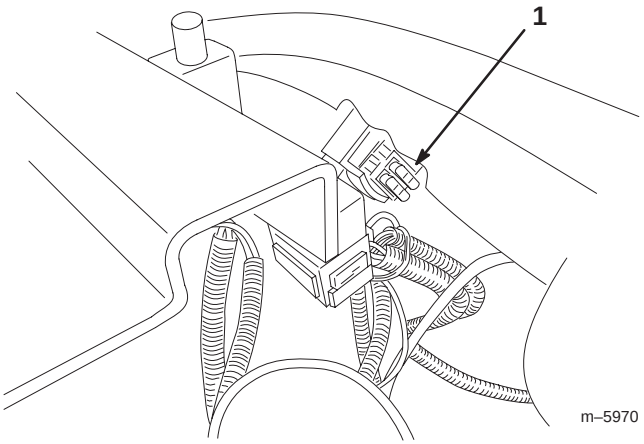

Figure 26

1. Fuses (under the seat)

Servicing the Cutting Blade

To ensure a superior quality of cut, keep the blade sharp. For convenient sharpening and replacement, you may want to have an extra blade.

Danger

A worn or damaged blade can break, and a piece of the blade could be thrown into the operator's or bystander's area, resulting in serious personal injury or death.

- **Inspect the blade periodically for wear or damage.**
- **Replace a worn or damaged blade.**

Inspecting the Blade

1. Inspect the cutting edges (Fig. 27). If the edges are not sharp or have nicks, remove the blade and sharpen them; refer to Sharpening the Blade, page 27.
2. Inspect the blade, especially the curved area (Fig. 27). If you notice any damage, wear, or a slot forming in this area (Fig. 27), immediately install a new blade.

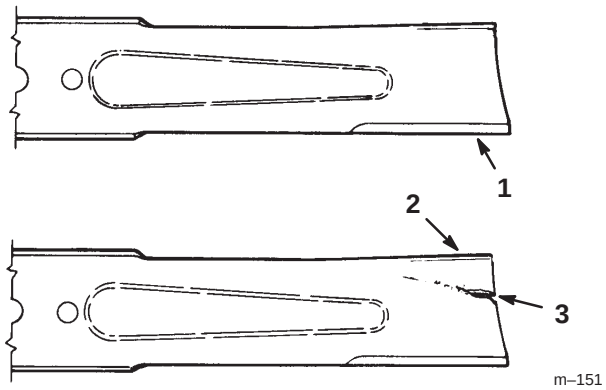

Figure 27

1. Cutting edge
2. Curved area
3. Wear/slot forming

Removing the Blade

1. Stop the engine and remove the ignition key. Pull the wire off of the spark plug.
2. Shift the transaxle into first gear and engage the parking brake.
3. Grasp the end of the blade using a rag or thickly padded glove. Then remove the blade bolt, curved washer, blade stiffener, and blade (Fig. 28). A block of wood may be wedged between the blade and the mower to lock the blade when you are removing the bolt.

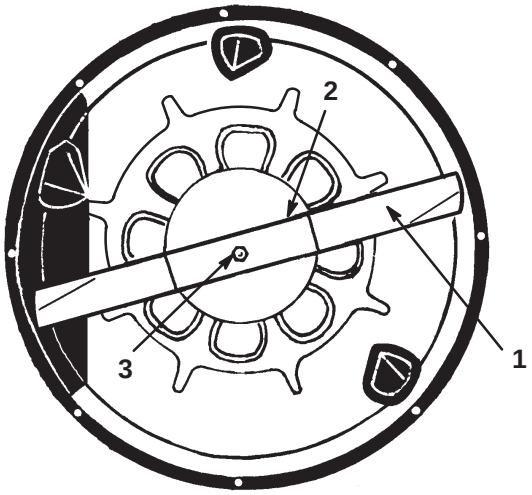

Figure 28

1. Blade
2. Blade stiffener
3. Blade bolt and curved washer

Sharpening the Blade

1. Use a file to sharpen the cutting edge at both ends of the blade (Fig. 29). Maintain the original angle. The blade retains its balance if the same amount of material is removed from both cutting edges.



Figure 29

1. Sharpen at original angle

2. Check the balance of the blade by putting it on a blade balancer (Fig. 30). If the blade stays in a horizontal position, the blade is balanced and can be used. If the blade is not balanced, file some metal off of the back side of the blade. Repeat this procedure until the blade is balanced.

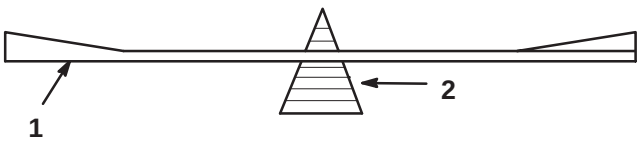

Figure 30

1. Blade
2. Balancer

Installing the Blade

1. Iinstall the blade, blade stiffener, curved washer, and blade bolt (Fig. 28).

Important The curved part of the blade must be pointing toward the inside of the mower to ensure proper cutting.

2. Tighten the blade bolt to 45–60 ft.-lb. (61–81 N·m)

Important Make sure the cutting edge of the blade is away from the mower housing.

Leveling the Mower

If the mower cuts unevenly and the cutting blade is not bent, then the mower must be leveled.

1. Place the tractor on level surface, engage the parking brake, stop the engine, and remove the ignition key.

2. Pull the wire off of the spark plug.

3. Set the air pressure in the front and rear ties to the recommended inflation; refer to Checking the Tire Pressure, page 25.

4. Remove the cotter pin at the front of the adjusting rod (Fig. 31).

5. Loosen the nut at the rear of the adjusting rod (Fig. 31).

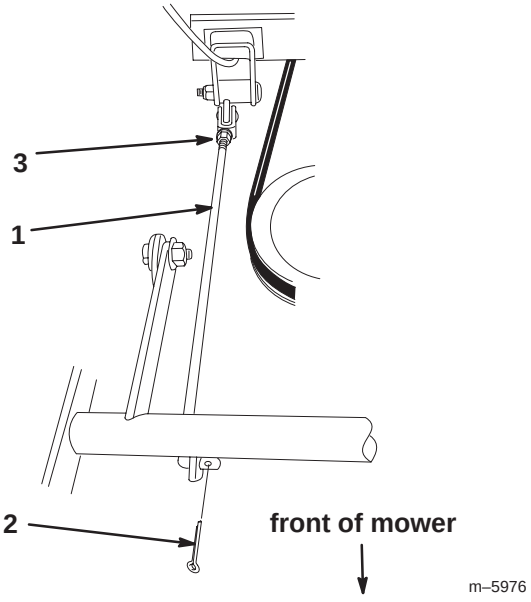

Figure 31

1. Adjusting rod
2. Cotter pin
3. Nut

6. Turn the adjusting rod to the desired deck level.

7. Tighten the nut and install the cotter pin.

Washing the Underside of the Mower

After each use, wash the underside of the mower to prevent grass buildup for improved mulch action and clipping dispersal.

1. Park the machine on a hard level surface, disengage the PTO, stop the engine, and remove the ignition key.
2. Attach the hose coupling to the end of the mower washout fitting, and turn the water on high (Fig. 32).

Note: Spread petroleum jelly on the washout fitting o-ring to make the coupling slide on easier and protect the o-ring.

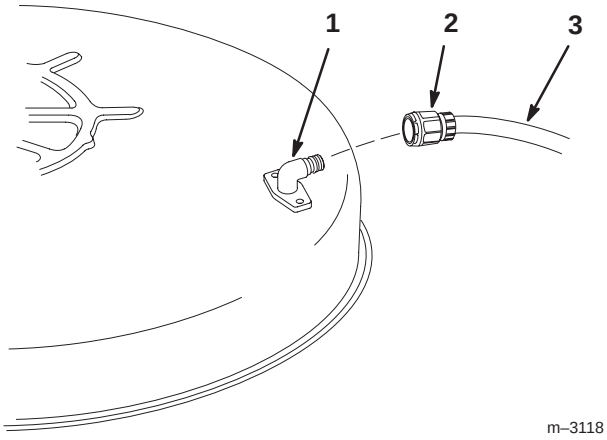

Figure 32

1. Washout port
2. Coupling
3. Hose

3. Lower the mower to the lowest height-of-cut.
4. Sit on the seat and start the engine. Engage the PTO and let the mower run for one to three minutes.
5. Disengage the PTO, stop the engine, and remove the ignition key. Wait for all moving parts to stop.
6. Turn the water off and remove the hose coupling from the washout fitting.

Note: If the mower is not clean after one washing, soak it and let it stand for 30 minutes. Then repeat the process.

7. Run the mower again for one to three minutes to remove excess water.

Warning

A broken or missing washout fitting could expose you and others to thrown objects or blade contact. Contact with blade or thrown debris contact will cause injury or death.

- **Replace broken or missing washout fitting immediately, before using mower again.**
- **Plug any hole(s) in mower with bolts and locknuts.**
- **Never put your hands or feet under the mower or through openings in the mower.**

Washing the Machine

1. Stop the engine and remove the ignition key. Wait 10–15 minutes for the engine to cool down.
2. Wash the machine with mild detergent and water.

Important **Do not use a pressure washer to wash the machine.** Pressure washing may damage the electrical system or wash away necessary grease at friction points. Avoid excessive use of water, especially near the control panel, lights, engine, and battery.

3. Start the engine to dry it off.

Cleaning and Storage

1. Disengage the PTO, set the parking brake, stop the engine, and remove the ignition key.
2. Remove grass clippings, dirt, and grime from the external parts of the entire machine, especially the engine. Clean dirt and chaff from the outside of the engine cylinder head fins and blower housing.

Important You can wash the machine with mild detergent and water. **Do not use a pressure washer to wash the machine.** Pressure washing may damage the electrical system or wash away necessary grease at friction points. Avoid excessive use of water, especially near the control panel, lights, engine, and battery.

3. Check the brake; refer to Checking the Parking Brake, page 25.
4. Service the air cleaner; refer to Servicing the Air Cleaner, page 23.
5. Change the crankcase oil; refer to Servicing the Engine Oil, page 20.
6. Check the tire pressure; refer to Checking the Tire Pressure, page 25.
7. For storage over 30 days, prepare the traction unit as follows:

   A. Add a petroleum based stabilizer/conditioner to fuel in the tank. Follow the mixing instructions from the stabilizer manufacturer (1 oz. per gallon). **Do not use an alcohol based stabilizer (ethanol or methanol).**

   Note: A fuel stabilizer/conditioner is most effective when mixed with fresh gasoline and used at all times.

   B. Run the engine to distribute conditioned fuel through the fuel system (5 minutes).

   C. Stop the engine, allow it to cool, and drain the fuel tank; refer to Draining the Fuel Tank, page 25.

   D. Restart the engine and run it until it stops.

   E. Choke or prime the engine.

   F. Start and run the engine until it will not start again. Use the primer, if equipped on the machine, several times to ensure that no fuel remains in the primer system.

   G. Dispose of fuel properly. Recycle as per local codes.

Important Do not store stabilizer/conditioned gasoline over 90 days.

8. Remove the spark plug(s) and check its condition; refer to Servicing the Spark Plug, page 24. With the spark plug(s) removed from the engine, pour two tablespoons of engine oil into the spark plug hole. Use the electric starter to crank the engine and distribute the oil inside the cylinder. Install the spark plug(s); refer to Spark Plug, page 24. Do not install the wire on the spark plug(s).
9. Disconnect the negative battery cable. Clean the battery and battery terminals. Check the electrolyte level and charge it fully; refer to Servicing the Battery, page 21. Leave the negative battery cable disconnected from the battery during storage.

Important The battery must be fully charged to prevent it from freezing and being damaged at temperatures below 32°F (0°C). A fully charged battery can be stored one winter season without recharging.

10. Check and tighten all bolts, nuts, and screws. Repair or replace any part that is worn or damaged.
11. Paint all scratched or bare metal surfaces. Paint is available from your Authorized Service Dealer.
12. Store the machine in a clean, dry garage or storage area. Remove the ignition and KeyChoice keys from the mower and keep them in a memorable place. Cover the machine to protect it and keep it clean.

Wiring Diagram

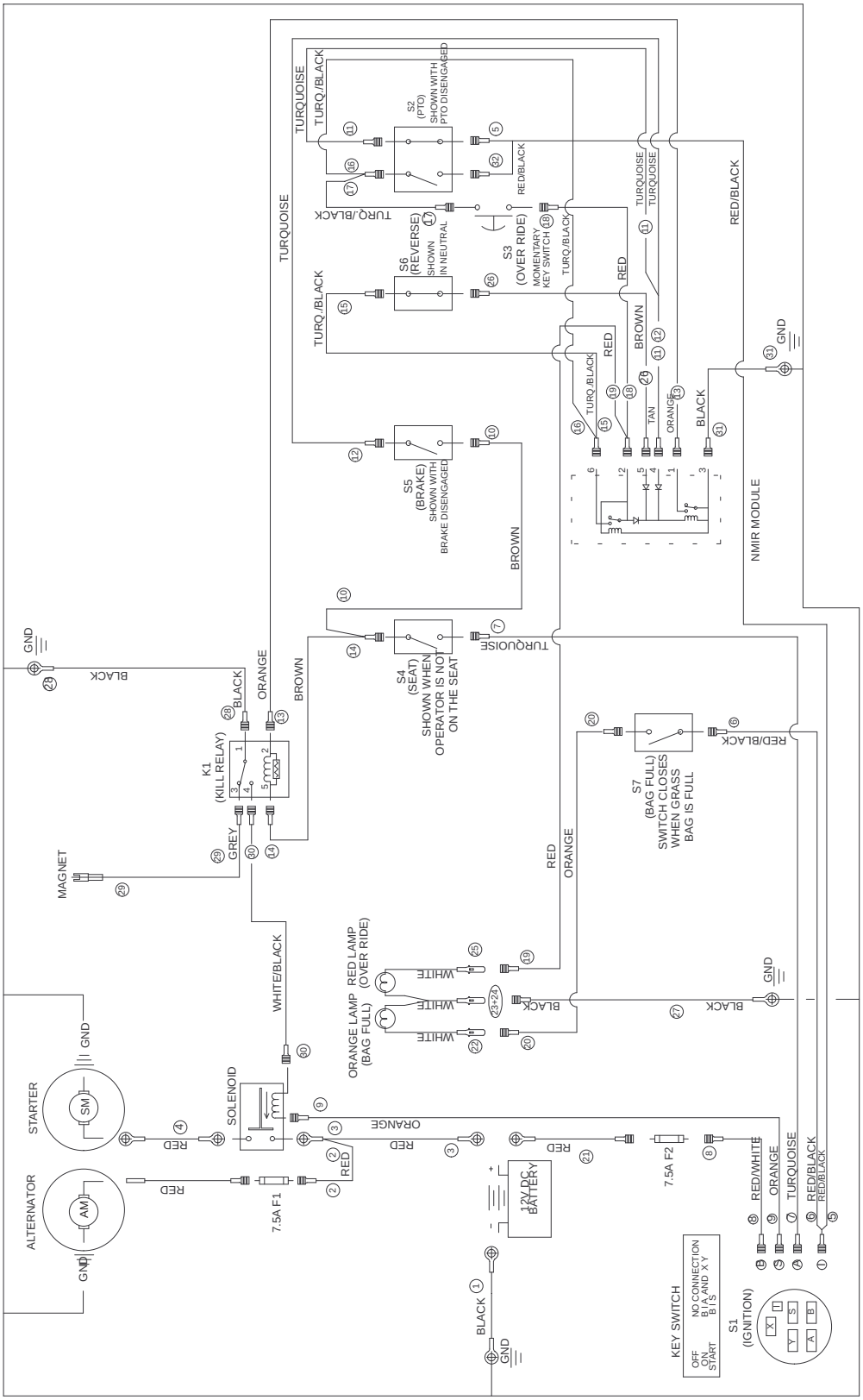

Troubleshooting

Problem	Possible Causes	Corrective Action
The starter does not crank.	1. The blade control (PTO) is Engaged.	1. Move the PTO to Disengaged.
	2. The parking brake is not on.	2. Set the parking brake.
	3. The battery is dead.	3. Charge the battery.
	4. The electrical connections are corroded or loose.	4. Check the electrical connections for good contact.
	5. A fuse is blown.	5. Replace the fuse.
	6. A relay or switch is damaged.	6. Contact an Authorized Service Dealer.
The engine will not start, starts hard, or fails to keep running.	1. The operator is not seated.	1. Sit on the seat.
	2. The fuel tank is empty.	2. Fill the fuel tank with gasoline.
	3. The air cleaner is dirty.	3. Clean or replace the air cleaner element.
	4. The spark plug wire is loose or disconnected.	4. Install the wire on the spark plug.
	5. The spark plug is pitted, fouled, or the gap is incorrect.	5. Install a new, correctly-gapped spark plug.
	6. The choke is not closing.	6. Adjust the throttle cable.
	7. There is dirt in the fuel filter.	7. Replace the fuel filter.
	8. The idle speed is too low or the mixture is incorrect.	8. Adjust the carburetor idle speed and idle mixture.
	9. Dirt, water, or stale fuel is in the fuel system.	9. Contact an Authorized Service Dealer.
	10. The engine is flooded.	10. Remove the spark plug and dry it.
	11. The battery is dead.	11. Charge the battery.
The engine loses power.	1. The engine load is excessive.	1. Shift into a lower gear to reduce ground speed.
	2. The air cleaner is dirty.	2. Clean the air cleaner element.
	3. The oil level in the crankcase is low.	3. Add oil to the crankcase.
	4. The cooling fins and air passages under the engine blower housing are plugged.	4. Remove the obstruction from the cooling fins and air passages.
	5. The spark plug is pitted, fouled, or the gap is incorrect.	5. Install a new, correctly-gapped spark plug.
	6. There is dirt in the fuel filter.	6. Replace the fuel filter.
	7. Dirt, water, or stale fuel is in the fuel system.	7. Contact an Authorized Service Dealer.

Problem	Possible Causes	Corrective Action
The engine overheats.	1. The engine load is excessive. 2. The oil level in the crankcase is low. 3. The cooling fins and air passages under the engine blower housing are plugged.	1. Shift into a lower gear to reduce ground speed. 2. Add oil to the crankcase. 3. Remove the obstruction from the cooling fins and air passages.
There is an abnormal vibration.	1. The cutting blade is bent or unbalanced. 2. The blade mounting bolt is loose. 3. The engine mounting bolts are loose. 4. There is a loose engine pulley, idler pulley, or blade pulley 5. The engine pulley is damaged.	1. Install a new cutting blade. 2. Tighten the blade mounting bolt. 3. Tighten the engine mounting bolts. 4. Tighten the appropriate pulley. 5. Contact an Authorized Service Dealer.
The blade does not rotate.	1. The blade drive belt is worn, loose, or broken. 2. The blade drive belt is off of the pulley.	1. Contact an Authorized Service Dealer. 2. Contact an Authorized Service Dealer.
The machine does not drive.	1. The traction belt is worn, loose, or broken. 2. The traction belt is off of the pulley. 3. The transmission does not shift.	1. Contact an Authorized Service Dealer. 2. Contact an Authorized Service Dealer. 3. Contact an Authorized Service Dealer.
The cutting height is uneven.	1. The tire pressure is incorrect. 2. The mower is not level. 3. The underside of the mower is dirty.	1. Set the tire pressure. 2. Level the mower. 3. Clean the underside of the mower.
The cutting quality is poor.	1. The cutting blade is worn. 2. The cutting height is incorrect.	1. Sharpen or replace the cutting blade. 2. Adjust the cutting height.
The grass collector fails to fill.	1. The cutting height is too low. 2. The grass is too heavy or damp. 3. The cutting blade is worn. 4. The grass is too high. 5. The discharge area is blocked.	1. Raise the cutting height. 2. Wait until the grass has dried. 3. Sharpen or replace the cutting blade. 4. Raise the cutting height. 5. Remove the obstruction from the discharge area.