Form No. 3443-356 Rev B

TORO®

Count on it.

Operator's Manual

Full Weather Cab

LT-F3000 Triple Flail Mower or LT3340 4 Wheel Drive Triple Reel Mower

Model No. 02955—Serial No. 400000000 and Up

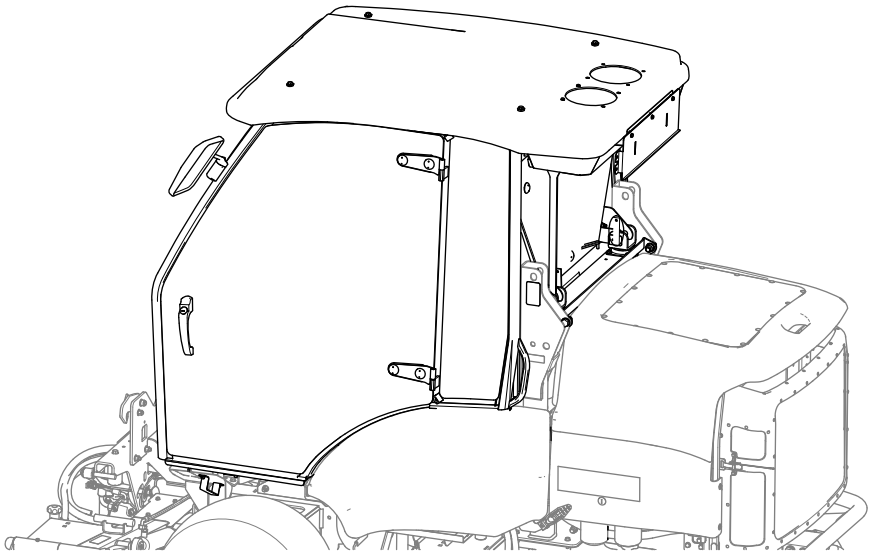

Register at www.Toro.com.
Original Instructions (EN)

CE UK CA

3443-356

Introduction

This cab provides rollover protection and full weather protection. It comes with a heating and air conditioning system for operator comfort and to de-mist the windscreen and a sound-reduction kit to reduce operator noise levels.

Read this information carefully to learn how to operate and maintain your product properly and to avoid injury and product damage. You are responsible for operating the product properly and safely.

Visit www.Toro.com for product safety and operation training materials, accessory information, help finding a dealer, or to register your product.

Whenever you need service, genuine Toro parts, or additional information, contact an authorized Toro distributor or Toro Customer Service and have the model and serial numbers of your product ready. Figure 1 identifies the location of the model and serial numbers on the product. Write the numbers in the space provided.

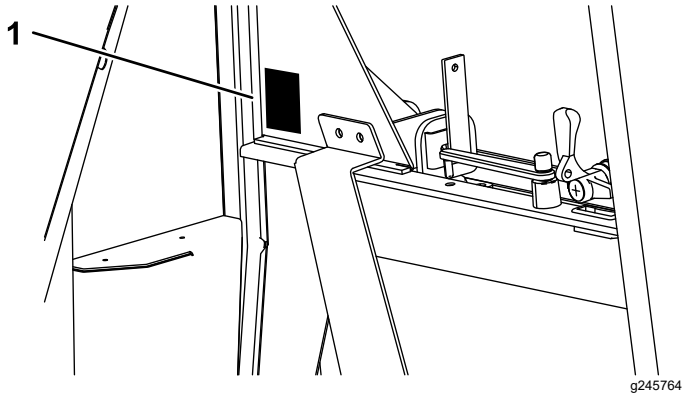

Figure 1

1. Model and serial number location

Model No. _____

Serial No. _____

This manual identifies potential hazards and has safety messages identified by the safety-alert symbol (Figure 2), which signals a hazard that may cause serious injury or death if you do not follow the recommended precautions.



Figure 2

1. Safety-alert symbol

This manual uses 2 words to highlight information. **Important** calls attention to special mechanical information and **Note** emphasizes general information worthy of special attention.

Contents

Safety 3
Maximum Slope Angles of Mowers with Cab 3
Safety and Instructional Decals 3
Product Overview 5
Controls 5
Specifications 7
Attachments/Accessories 7
Operation 7
Using the Sunshade 7
Using the Air Conditioner for the First Time 7
Operating the Heating and Air-Conditioning System 8
Operating the Windscreen Wiper and Washer 8
Filling the Screen Washer Bottle 8
Operating the Windows 9
Operating the Doors 10
Adjusting the Mirrors 11
Maintenance 12
Recommended Maintenance Schedule(s) 12
Preparing for Maintenance 13
Tilting the Cab 13
Locating the Fuses 14
Checking the Air-Conditioner Compressor Clutch 15
Removing the Roof 15
Installing the Roof 16
Checking the Refrigerant Level 16
Inspecting and Cleaning the Condenser 16
Checking the Drain Tubes 17
Checking the Compressor-Fan Belt 17
Checking the Refrigerant Pressure 18
Troubleshooting the Pressure Readings 18
Washing the Machine and Cab 18
Storage 19
Schematics 20

© 2023—The Toro® Company
8111 Lyndale Avenue South
Bloomington, MN 55420

Contact us at www.Toro.com.
Printed in the UK
All Rights Reserved

Safety

⚠ WARNING

Working on the machine without the safety support bracket increases the risk of injury to you and others.

Before performing maintenance underneath the operator platform and cab, ensure that the safety support bracket is installed.

⚠ WARNING

The electrical system of the machine could shock you and cause personal injury.

Before working on the machine electrical systems, always disconnect the battery terminals (negative terminal first) and ensure that no contact is made between the terminals and metal parts of the machine.

Important: **Always wear the seat belt when the safety cab is installed.**

Important: **Refer to your machine *Operator's Manual* for advice and guidance when operating a mower on slopes.**

To ensure optimum performance and continued safety certification of the machine, use only genuine Toro replacement parts and accessories. Replacement parts and accessories made by other manufacturers could be dangerous, and such use could void the product warranty.

Maximum Slope Angles of Mowers with Cab

You can fit this cab to the mowers listed at the front of this document. When fitted with a cab, each mower model has a different maximum slope angle and this is stated on the decal located on the lid of the storage pod on the left of the machine. Refer to Safety and Instructional Decals (page 3) for the correct maximum slope angle decal for your machine when fitted with a cab.

Safety and Instructional Decals

Safety decals and instructions are easily visible to the operator and are located near any area of potential danger. Replace any decal that is damaged or missing.

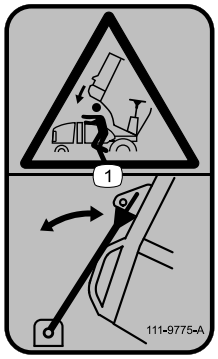

decal111-9775

111-9775

1. Crushing hazard—always use the hood stay.

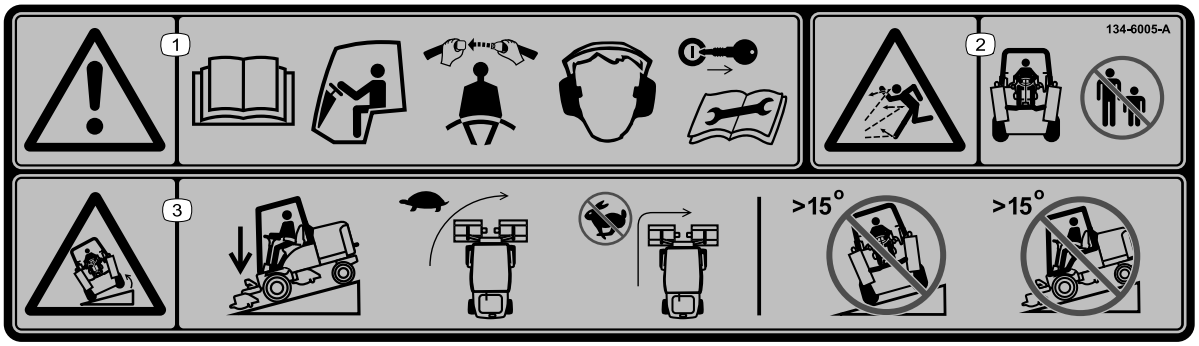

decal134-6005

134-6005

1. Warning—read the *Operator's Manual*; when sitting in the cab, always wear a seat belt; wear hearing protection; remove the key from the ignition before performing maintenance.
2. Thrown object hazard—keep bystanders away.
3. Tipping hazard—lower attachments when operating on hills/slopes; drive slowly when turning; do not turn sharply while traveling fast; do no operate on slopes greater than 15 degrees.

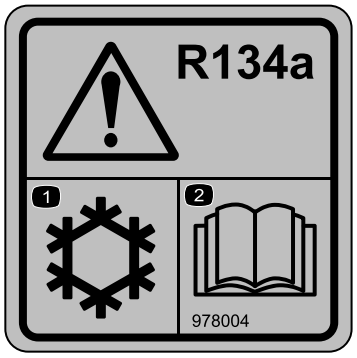

decal978004

978004

1. Cooling/air-conditioning system
2. Read the *Operator's Manual*.

Product Overview

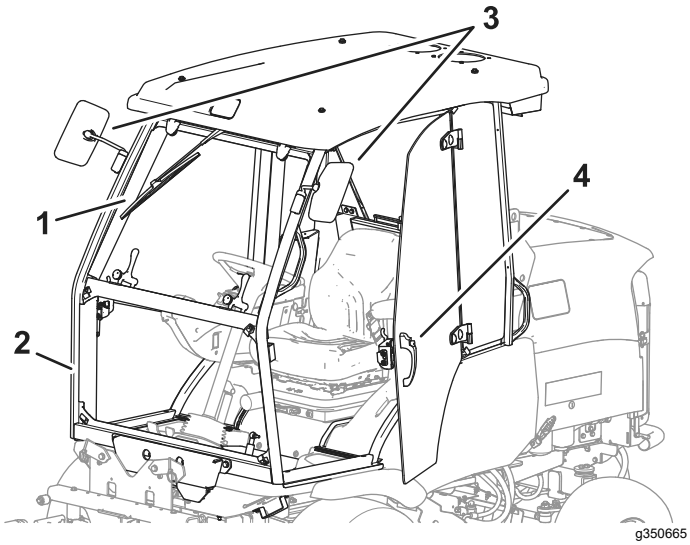

Figure 3

1. Wiper
2. Adjustable lower windscreen
3. Rearview mirrors
4. Door and locking handle

Controls

Blower Controls

The controls are mounted on the right side in the roof lining.

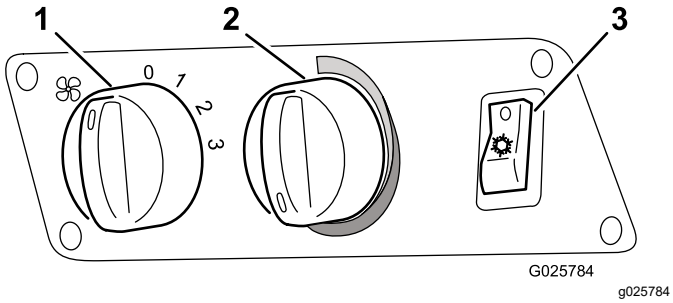

Figure 4

1. 3-position switch for radial-blower speed
2. Temperature controller
3. Air-conditioner switch

Screen Wiper and Washer Switch

The switch is mounted on the left side in the roof lining.

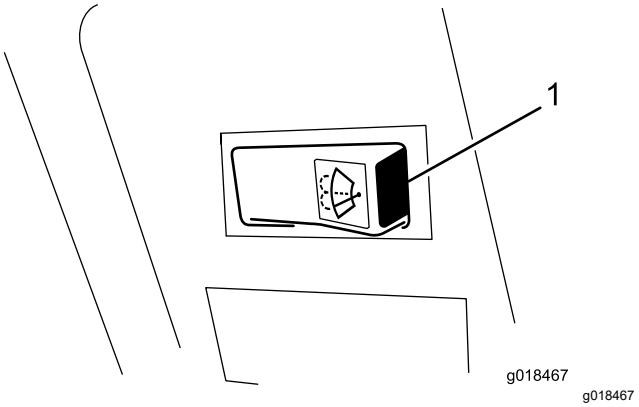

Figure 5

1. Screen wiper/washer switch

Interior Light Switch

Press the front of the interior light switch (Figure 6) to turn on the light. Press the rear of the switch to turn off the light.

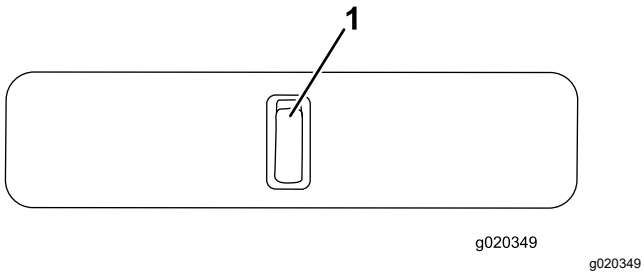

Figure 6

1. Interior light switch

Front Window Handle (2)

You can open the front window for ventilation. There are 2 handles (Figure 7).

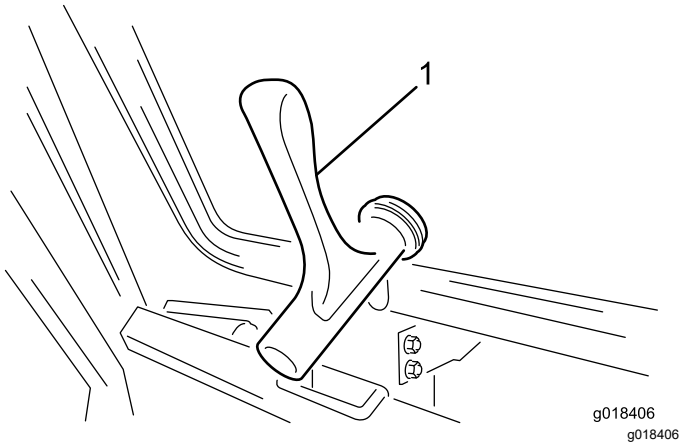

Figure 7

1. Front window handle

Rear Window Handle and Prop

You can open the rear window for ventilation. Rotate the rear window prop to hold the window open (Figure 8).

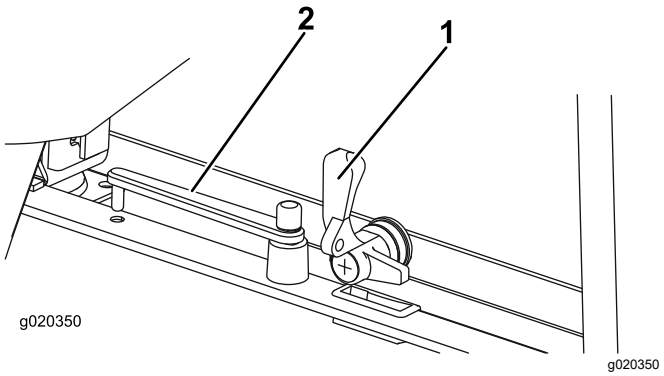

Figure 8

1. Rear window handle
2. Rear window prop

Specifications

Note: Specifications and design are subject to change without notice.

AIR CONDITIONER	
Cooling performance	4.2 kW
Refrigerant	R134A
Recommended quantity of refrigerant	850 g (1.87 lb)
Evaporator—volumetric air flow of the blower	660 m^3/h (23,307 ft^3/h)
ELECTRICAL	
Operating voltage	12 V
Fuse for radial blower / compressor	15 A
Fuse for axial blower	25 A
COMPRESSOR	
Designation	TM-08 HS
Direction of rotation (viewing the pulley)	clockwise
Operating speed	700 to 6000 rpm
Piston displacement	82 cm^3/rev (5 $inch^3$/rev)
Pressure-side connection	3/4 inch O-ring
Suction-side connection	7/8 inch O-ring
Magnetic clutch operating voltage	12 V
Magnetic clutch power consumption	0.45 W
Refrigerant oil	ZXL 100 PAG
Refrigerant oil volume in compressor	150 cm^3 (9.15 $inch^3$)
Refrigerant oil—additional required to fill air-conditioner system	25 cm^3 (1.53 $inch^3$)
Power consumption of air-conditioner system	2.5 kW

Attachments/Accessories

A selection of Toro approved attachments and accessories are available for use with the machine to enhance and expand its capabilities. Contact your authorized Toro distributor or go to www.Toro.com for a list of all approved attachments and accessories.

To ensure optimum performance and continued safety certification of the machine, use only genuine Toro replacement parts and accessories. Replacement parts and accessories made by other manufacturers could be dangerous, and such use could void the product warranty.

Operation

Note: Determine the left and right sides of the machine from the normal operating position.

Using the Sunshade

Rotate the sunshade up or down (Figure 9) to adjust the position of the shade.

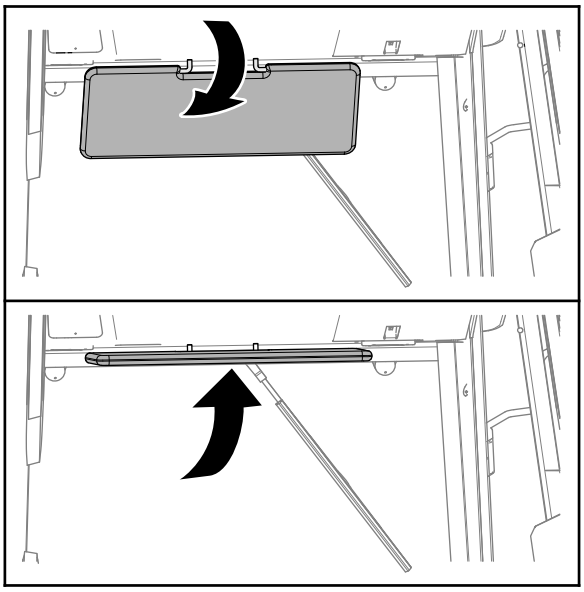

g347537

Figure 9

Using the Air Conditioner for the First Time

1. Start the engine.
2. Switch on the blower switch (Figure 4).
3. Switch on the air-conditioning switch (Figure 4).
4. Set the temperature controller (Figure 4) to the maximum Cold setting (full clockwise direction).

   Note: After 3 minutes, the air-outlet louvers should emit cold air.
5. Adjust the fan speed and temperature control to achieve the required amount of cooling.

Operating the Heating and Air-Conditioning System

Important: **To prevent the battery discharge, ensure the air-conditioner switch is in the OFF position before you shut off the engine.**

Important: **Run the air-conditioning system for 15 minutes every 14 days to keep the compressor-shaft seals lubricated.**

1. To run the air-conditioner, press the air-conditioner switch to the ON position.

   Note: To use the heating and air-conditioning system to recirculate cab air or for heating the cab, press air-conditioner switch to the OFF position.

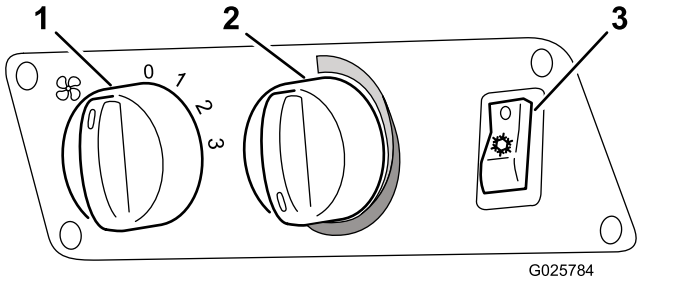

g025784

Figure 10

1. Blower-speed control (3-position)
2. Temperature control
3. Air-conditioner switch

2. Rotate the blower-speed control for the desired airflow rate.
3. Rotate the temperature control to the desired heat or cool setting.

   Note: When the air-conditioner switch is in the ON position, the thermostat runs the air-conditioning system to maintain the set temperature.
4. Adjust the 2 air-duct nozzles (Figure 11) in the ceiling of the cab to direct air flow to desired direction.

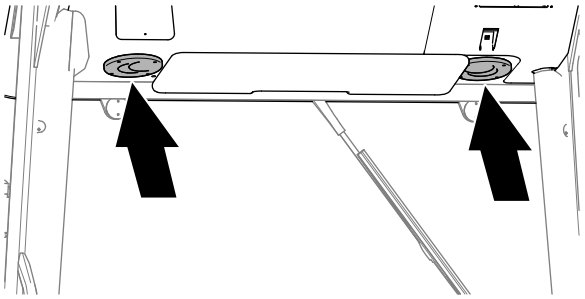

g347779

Figure 11

Operating the Windscreen Wiper and Washer

1. Press the right side of the switch to run the windscreen wipers (Figure 12).

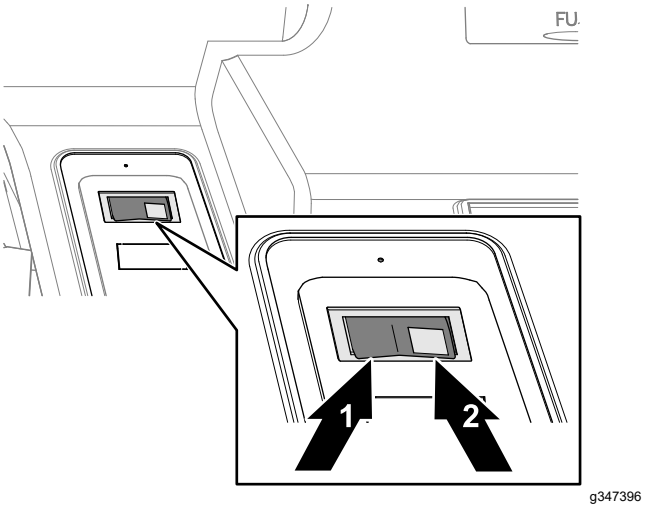

g347396

Figure 12

1. OFF
2. ON/WASH

2. Press the right side of the switch and hold it to run the windscreen washer (Figure 12).
3. Press the left side of the switch to shut off the windscreen wipers (Figure 12).

Filling the Screen Washer Bottle

⚠ WARNING

Failure to use windscreen-wash fluid with antifreeze protection in cold weather could result in impaired windscreen visibility, and increased the risk of injury or accident.

If you operate your machine in temperatures—below 5°C (40°F), use washer fluid with antifreeze protection.

1. Open the hood of the machine.
2. Remove the cap from the wash tank (Figure 13).

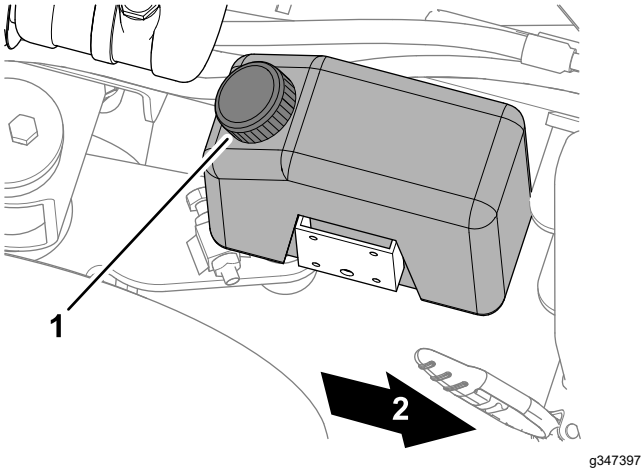

g347397

Figure 13

1. Cap (windscreen wash tank)

3. Fill the wash tank with clean water and the recommended quantity of windscreen-wash fluid.
4. Install the cap to the wash tank (Figure 13).
5. Close and latch the hood.

Operating the Windows

Adjusting the Windscreen

Opening and Closing the Windscreen

- To open the windscreen, rotate the latch handles counterclockwise (horizontal), and push the handle forward (Figure 14).

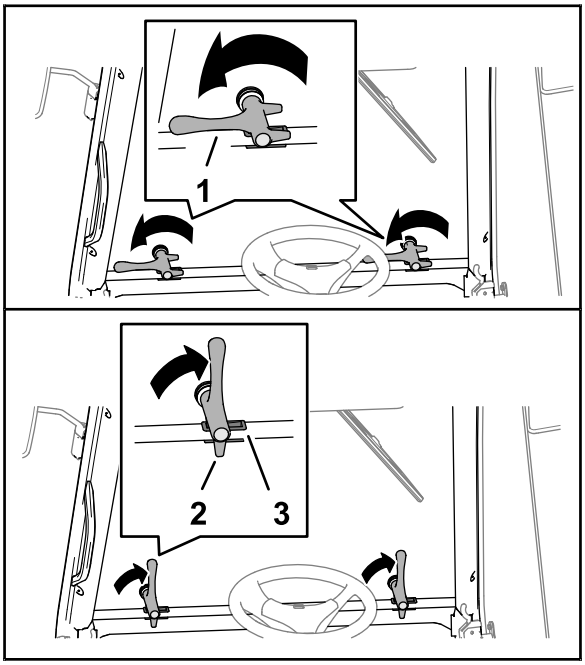

g347572

Figure 14

1. Latch handle
2. Latch pin (rear shown—latch handle)
3. Socket

- To close the windscreen, rotate that the latch handles are horizontal, pull the latch handles until the windscreen is seated, and rotate the handles clockwise until they are vertical (Figure 14).

Partially Opening the Windscreen

1. Rotate the latch handles counterclockwise (horizontal), and push the handle forward
2. Align the rear latch pin with the socket (Figure 15).

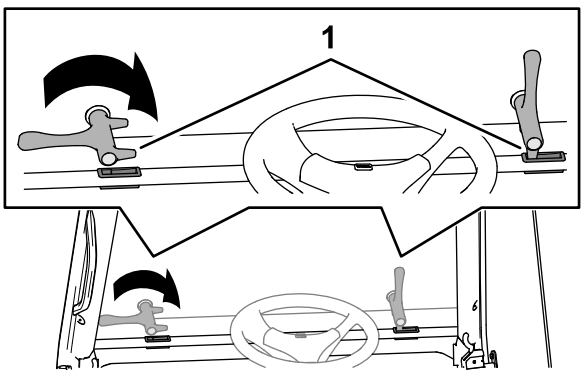

g347571

Figure 15

1. Latch pin (rear—latch handle)

3. Rotate the handles clockwise until they are vertical (Figure 15).

Adjusting the Rear Window

Opening and Closing the Rear Window

- To open the rear window, rotate the latch handle (Figure 16) counterclockwise.

  Note: The gas/spring cylinder pushes the window fully open.

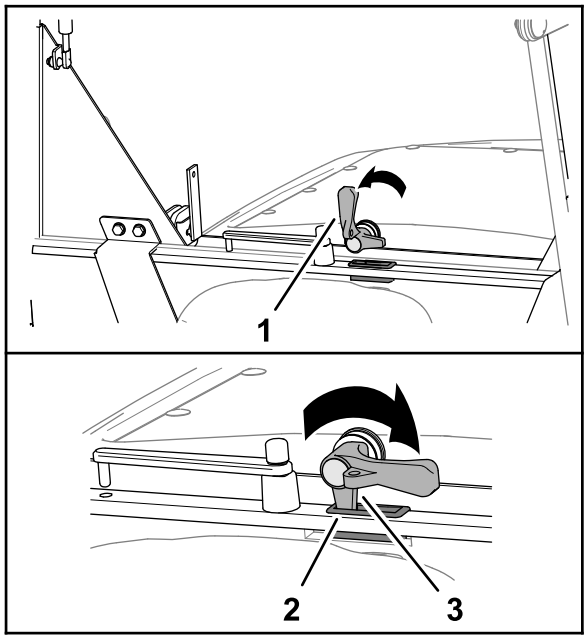

g347754

Figure 16

1. Latch handle
2. Socket
3. Latch pin (latch handle)

- To close the rear window, rotate so that the latch handles are vertical, pull the latch handle until the window is seated, and rotate the handles clockwise until it is horizontal (Figure 16).

Partially Opening the Rear Window

1. Open the rear window.
2. Rotate the latch handle horizontal (Figure 17).

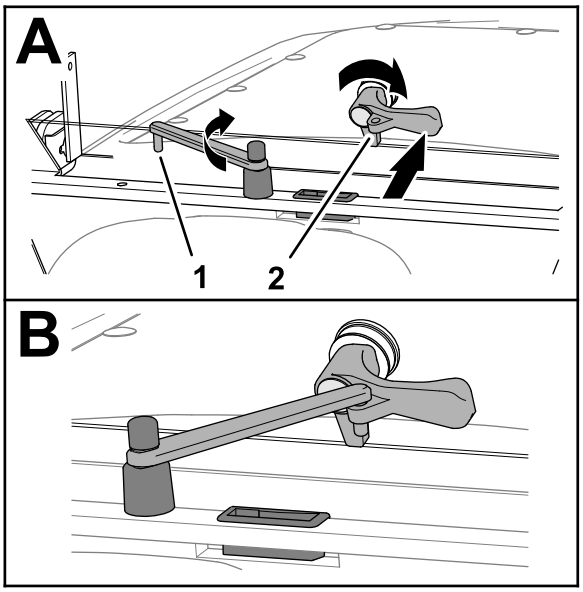

g347755

Figure 17

1. Pin (prop rod)
2. Window latch

3. Rotate the window prop to the window latch, and align the pin of the rod through the hole in the handle (Figure 17).
4. To close the rear window, lift the pin of the prop rod from the window latch, rotate the prop away from the window, pull the window closed, and secure it with the window latch.

Operating the Doors

To open the door from outside the cab, press the door latch handle knob while opening the door (Figure 18).

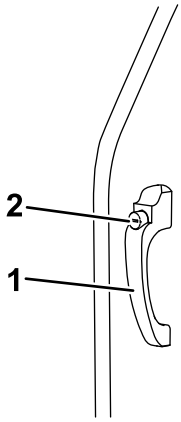

g020379

g020379

Figure 18

1. Door latch handle
2. Door latch knob

To open the door from inside the cab, pull back on the door lock release lever while opening the door (Figure 19).

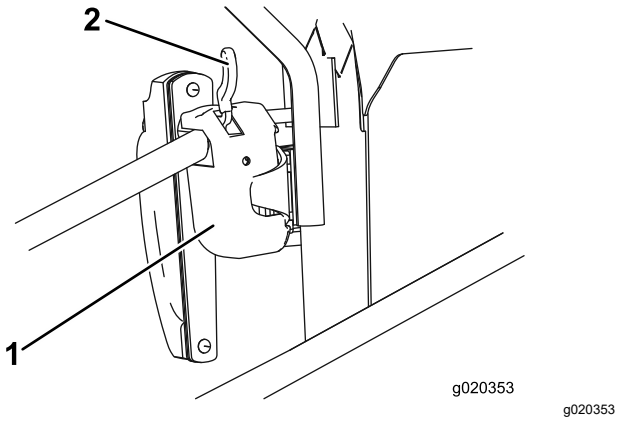

g020353

Figure 19

1. Door lock
2. Release lever

Adjusting the Mirrors

While the sitting in the seat, have a another person adjust the side-view mirrors to provide you the best view along the side of the machine (Figure 20).

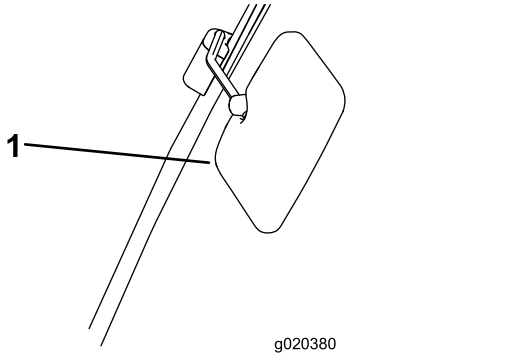

g020380

Figure 20

1. Side-view mirror

Maintenance

Note: Determine the left and right sides of the machine from the normal operating position.
For all maintenance procedures, park the machine on a level surface, shut off the engine, and remove the key.

Recommended Maintenance Schedule(s)

Maintenance Service Interval	Maintenance Procedure
After the first 100 hours	• Check all connections for tightness.
Every 250 hours	• Check the air-conditioner compressor clutch for correct operation. • Check the water drain for blockage, and clean it as necessary. • Examine the condition of the electrical cables. • Examine the condition and tightness of the electrical connectors.
Every 500 hours	• Check the compressor-fan belt condition and tension, and adjust it as necessary. • Examine the hose lines for abrasion and general condition. • Check all connections for leaks (contact your authorized Toro distributor for service). • Examine the condition of the climatic unit in the cab roof, and check the parts for tightness. • Check the compressor brackets tightness of fittings.
Monthly	• Check the refrigerant level (using the sight glass). • Inspect and clean the condenser.
Every 2 years	• Change the dryer/filter (contact your authorized Toro distributor for service). • Check/replace refrigerant and oil (contact your authorized Toro distributor for service).

⚠ WARNING

Working on the machine without the cab support bracket increases your risk of injury.

Before carrying out maintenance underneath the operator platform and cab, install the cab support bracket.

⚠ CAUTION

If you leave the key in the ignition switch, someone could accidently start the engine and seriously injure you or other bystanders.

Remove the key from the ignition before you do any maintenance.

Important: **Maintenance or repairs on the heating system should be carried out by an authorized Toro distributor or a specialist in vehicle heating systems.**

Important: **All work on the refrigerant part of the air-conditioning system should be carried out by qualified personnel.**

- You can use the air-conditioning system for many months of the cutting season. Follow the regular prescribed maintenance to prolong the life of the system and ensure efficient operation. Failure to carry out the prescribed and documented maintenance could invalidate the warranty on the system and its components.
- Even if the air-conditioning system is used infrequently, follow the maintenance schedule, as aging and refrigerant loss can occur with time.
- Low levels of refrigerant can reduce the efficiency of the air-conditioning unit.
- Extremely low levels can cause the low-pressure switch to shut down the system.
- To check the refrigerant level, there is an integrated sight glass in the collecting tank. After filling, run the system for 5 minutes to allow all air bubbles to be purged from the system. Check the level after this period and top up is necessary. The occasional air bubble can be accepted.

Important: **Do not spill compressor oil on the vehicle surface. It can cause discoloration of vehicle paint and deterioration of acrylic or ABS plastic components.**

- When attaching the refrigerant hoses, oil the sealing rings with refrigerant oil.
- After removal of refrigerant hoses from the air-conditioner system, always replace the O-rings with new ones specified for refrigerant 134A.
- When tightening or loosening fittings, always use 2 wrenches to prevent the tubes from twisting.

Preparing for Maintenance

Preform the following steps each time you maintain the machine.

1. Move the machine to a level surface.
2. Engage the parking brake and lower the cutting units.
3. Shut off the engine and remove the key.
4. Wait for all moving parts to stop.

Tilting the Cab

You can tilt the cab for access under the operator platform for cleaning and maintenance.

The cab and the operator platform tilt together as a single unit. The angle of tilt is less than that of a platform without a cab. This is to ensure that, owing to the weight and position of the tilted cab, the machine has sufficient stability when you tilt the cab.

Tilting the Cab Forward

1. Ensure that the rear widow is shut and locked.
2. At the cross beam near the back of the cab, remove the 2 hairpins that secure the latch pins to the cab supports.
3. Rotate the latch-pin handles so that they point upward (Figure 21).

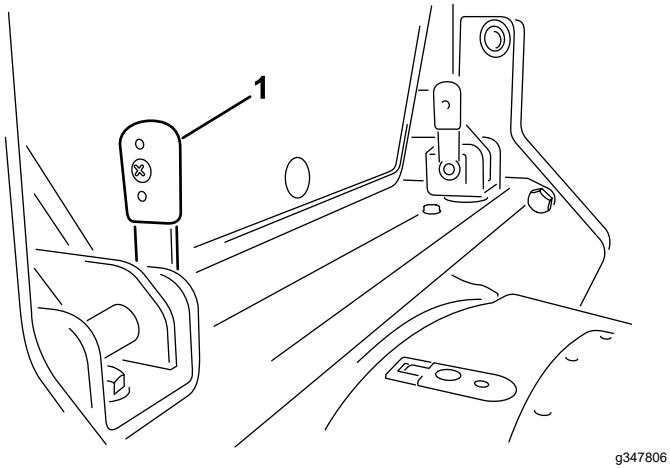

Figure 21

1. Latch-pin handle—rotated upward (vertical)

4. Slide the latch pins inboard, and remove them from the cab supports.

   Note: If the latch pins are difficult to remove, move the handles of the latch pins back and forth to help free the pins from the flange holes and beam bracket holes.

5. At either sides of the cab, slowly lift the grab handle on rear corner post until the cab is fully raised.

   Note: Gas spring lift cylinders help you raise the cab, and stop it from tilting further when it is fully raised.

6. Remove the cab-support bracket from the storage compartment.

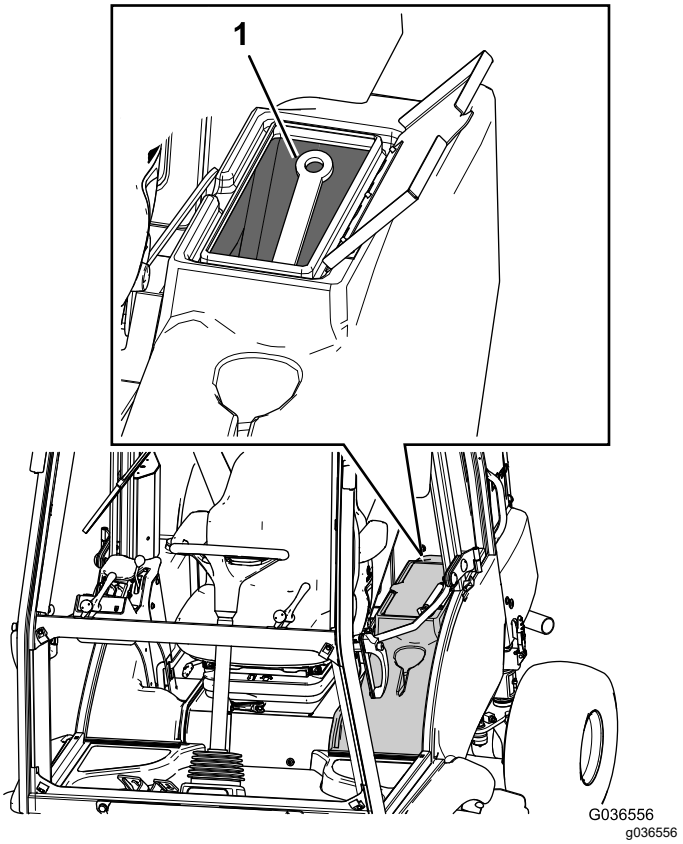

Figure 22

1. Safety support bracket

7. At either side of the machine, align the hole in the cab-support bracket with the holes in the cross-beam bracket, and secure the support

bracket to the beam bracket with a latch pin and hairpin.

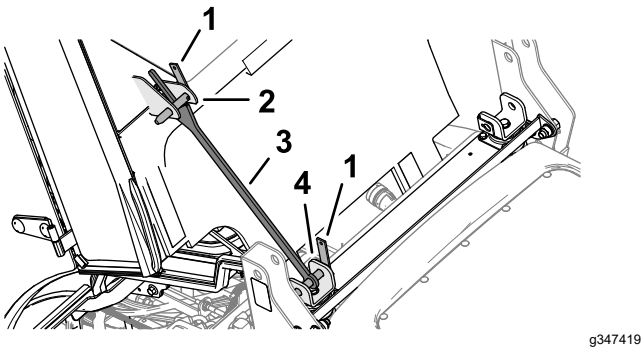

Figure 23

1. Latch pins
2. Cab-frame flange
3. Cab support bracket
4. Cross-beam bracket

8. Rotate the cab support bracket toward the cab so that it aligns between the cab-frame flanges, and rests against the back of the cab frame (Figure 23).
9. Insert the other latch pin through the holes in the cab-frame flange, and secure the latch pin to the flanges with the hairpin (Figure 23).

Lowering the Cab

1. Remove the 2 hairpins and latch pins that secure the cab support bracket to the cab and the cross-beam bracket, and remove the cab support.
2. At either sides of the cab, slowly pull down the grab handle on the rear corner post until the cab is fully lowered.
3. Align the holes in the cab-frame flange and the holes in the cross-beam bracket (Figure 24).

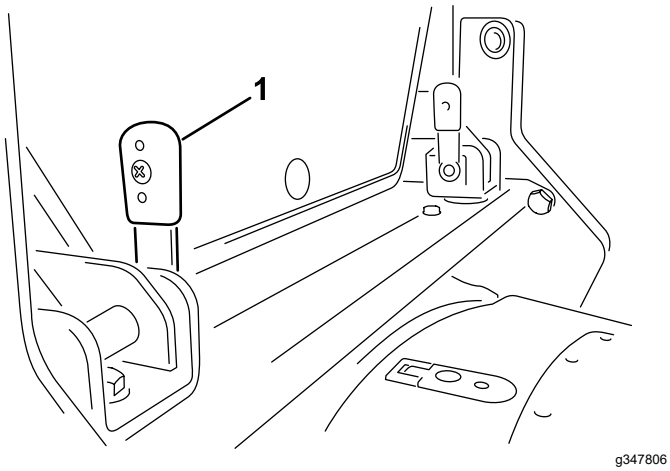

Figure 24

1. Latch pin —rotated upward (vertical)

4. Insert the 2 latch pins (Figure 24) through the holes in the cab-frame flanges and cross-beam brackets.

   Note: If the latch pins are difficult to insert, move the handles of the latch pins back and forth to help align the pins to the flange holes and beam bracket holes.
5. Rotate the latch-pin handles horizontal (Figure 25), and secure the latch pins with the 2 hairpins.

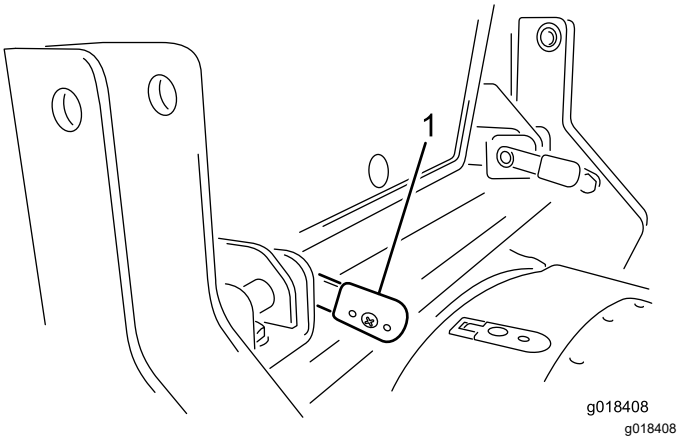

Figure 25

1. Latch-pin handle—rotated downward (horizontal)

6. Stow the cab-support bracket in the storage compartment.

Locating the Fuses

The cab fuses are located in the fuse box in the cab headliner (Figure 26).

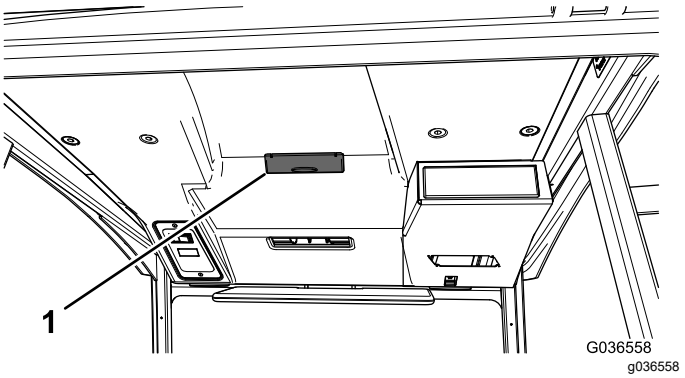

Figure 26

1. Cab fuse box

Note: The fuse identification numbers are molded into the fuse-box cover.

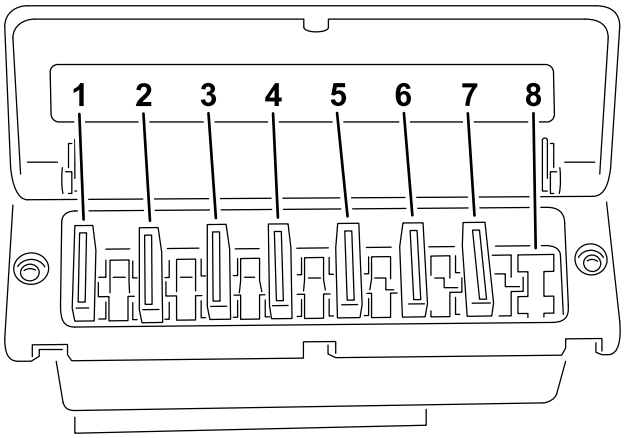

g350748

Figure 27

1. 3 A (constant power—radio and interior light)
2. 10 A (switched power—radio)
3. 25 A (rear fans relay)
4. 15 A (blower fans)
5. 7.5 Amp (washer/wiper)
6. 5 A (A/C compressor clutch)
7. 5 A (temperature control)
8. Empty

Checking the Air-Conditioner Compressor Clutch

Service Interval: Every 250 hours

1. Unlatch and open the hood (Figure 36).

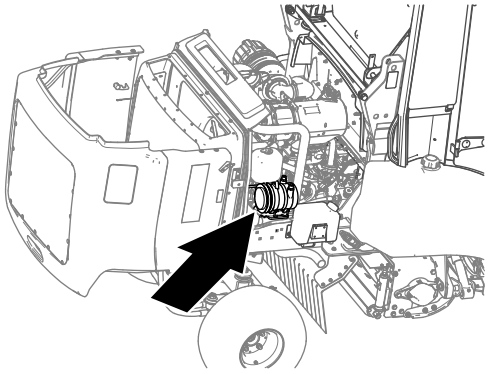

g347425

Figure 28

2. Have another person sit in the operator's seat, rotate the temperature control to the cold position, and press the air-conditioner switch to the ON and OFF positions (Figure 29).

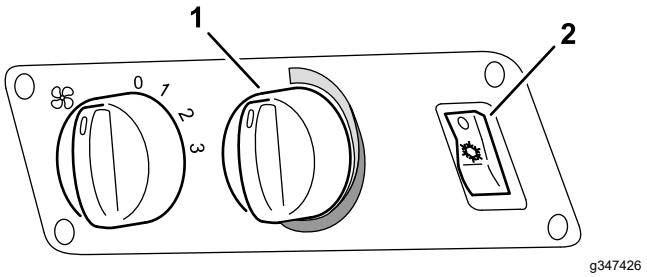

g347426

Figure 29

1. Temperature control
2. Air-conditioner switch

3. At the back of the machine, listen for the compressor clutch (Figure 30) engaging and disengaging (clicking).

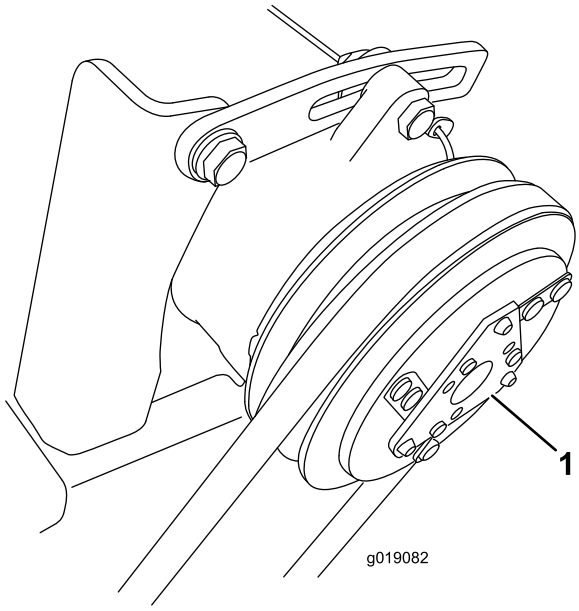

g019082

Figure 30

1. Compressor clutch

4. Press the air-conditioner switch (Figure 29) to the OFF position.

   Important: **To prevent the battery discharge, ensure the air-conditioner switch is in the OFF position.**

Removing the Roof

1. Remove the 4 bolts, 4 washers, and 4 seals that secure the roof to the cab (Figure 31).

   Note: Do not remove the 8 bolts around the fans.

   Important: **The fans are mounted to the roof.**

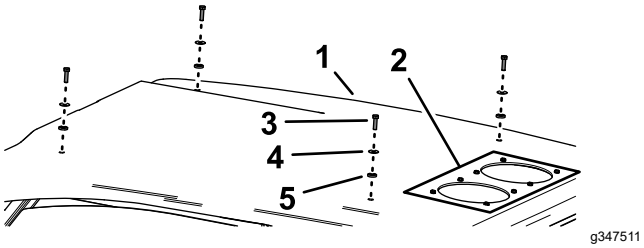

Figure 31

1. Cab roof
2. Fans
3. Bolt
4. Washer
5. Seal

2. Disconnect the wire-harness connectors at each of the fans.
3. Carefully remove the roof from the cab.

Installing the Roof

1. Position the roof onto the frame of the cab.
2. Connect the wire-harness connectors at each of the fans.
3. Align the holes in the roof with the clip nuts of the cab frame.
4. Assemble the roof to the cab with the 4 bolts, 4 washers, and 4 seals (Figure 31) that you removed in step 1.

Checking the Refrigerant Level

Service Interval: Monthly (using the sight glass).

Check the refrigerant to assure it is at the correct level for air-conditioner operation.

1. Remove the hardware securing the roof; refer to Removing the Roof (page 15).

   Note: Do not remove the roof.
2. Ensure that the parking brake is engaged, start the engine, rotate the temperature control to the cold position, and press the air-conditioner switch to the ON positions (Figure 32).

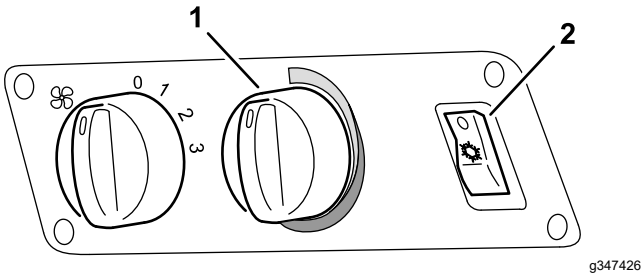

Figure 32

1. Temperature control
2. Air-conditioner switch

3. Idle the engine for 5 minutes to allow the air-conditioning system to purge air bubbles from the refrigerant.
4. Move the roof enough to access the collecting-filter tank (Figure 33).

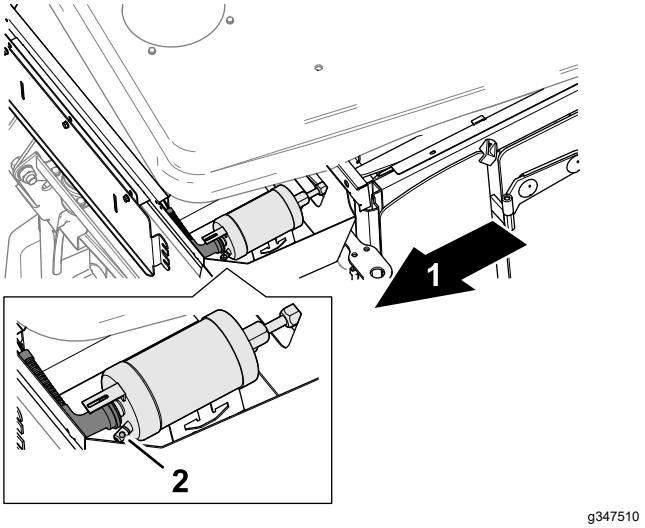

Figure 33

1. Back of the machine
2. Refrigerant-level sight glass (collecting-filter tank)

5. At the roof, observe the refrigerant-level sight gauge of the collecting-filter tank (Figure 33). If there are more that the occasional bubble seen through the sight glass, contact your authorized Toro distributor for service.

   Note: If you see an occasional air bubble, the refrigerant-level is acceptable. As the refrigerant level lowers, you will see more air bubbles passing through the sight glass. Low levels of refrigerant reduce the air-condition effectiveness.

   Important: **An extremely low refrigerant level causes the low-pressure switch to shut down the air-conditioner.**
6. Press the air-conditioner switch (Figure 32) to the OFF position and shut off the engine.

   Important: **To prevent the battery discharge, ensure the air-conditioner switch is in the OFF position.**

Inspecting and Cleaning the Condenser

Service Interval: Monthly

1. Remove the roof from the cab; refer to Removing the Roof (page 15).

2. Examine the fins of the condenser and evaporator for accumulating dust and debris.

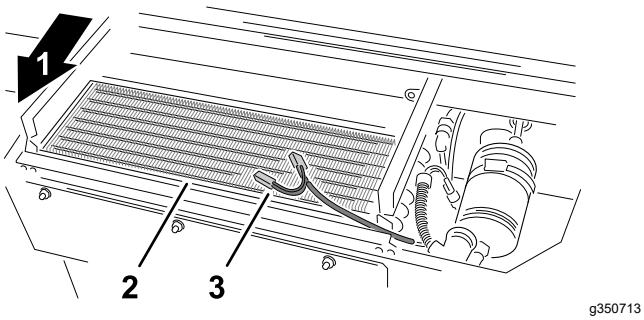

Figure 34

1. Back of the machine
2. Condenser
3. Fan wire harness

3. If needed, clean the condenser and evaporator fins with compressed air in the opposite direction of the normal air flow. If there is any buildup of greasy deposits, clean it with a non-abrasive soap solution.
4. Install the cab roof; refer to Installing the Roof (page 16).

Checking the Drain Tubes

Service Interval: Every 250 hours

The water drains are clear plastic tubes that connect to the blower evaporator in the cab roof. The drain tubes route down both front cab A pillars, and drain water from the evaporator.

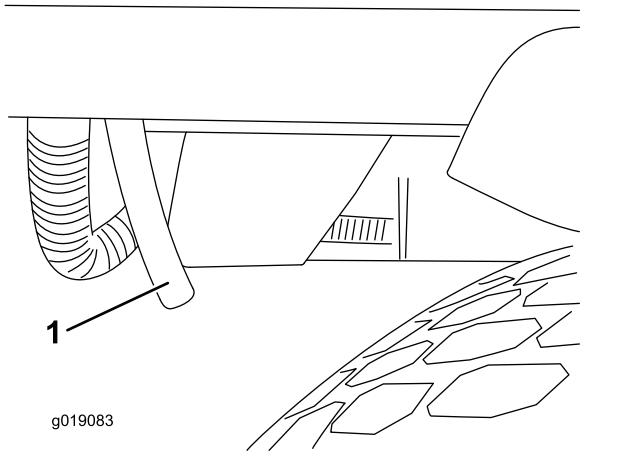

Figure 35

Front of the cab.

1. Drain tube

1. Check the drain tubes for blockages.
2. If the tube is blocked, use a flexible cleaning tool, such as a pipe cleaner. If needed, disconnect the tube from the condenser-drain fitting, and blow out the tube with compressed air.

Checking the Compressor-Fan Belt

Service Interval: Every 500 hours

1. Unlatch and open the hood (Figure 36).

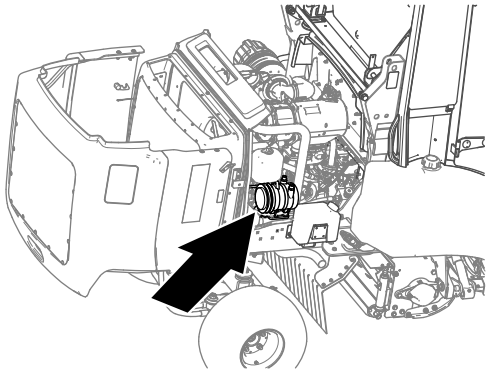

Figure 36

2. Check belt tension by applying 40 N (9 lb) of force on the belt (Figure 37), midway between the engine pulley and the compressor pulley.

   Note: The belt is properly tensioned if the belt deflects 10 mm (3/8 inch).

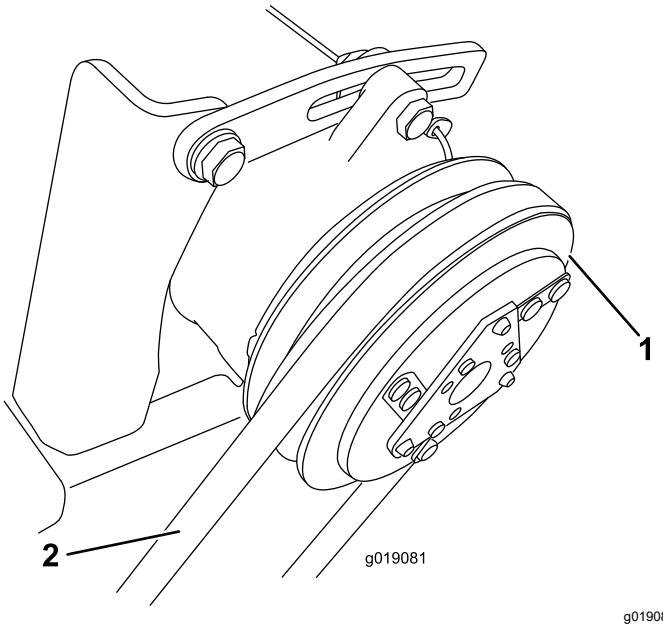

Figure 37

1. Compressor
2. Check the belt deflection here.

3. If belt deflection is greater than or less that 10 mm (3/8 inch), loosen the upper and lower compressor-mounting bolts.
4. Rotate the compressor to increase or decrease the belt tension, and tighten the bolts.

5. Repeat step 2 to ensure that the belt tension is correct.
6. Close the hood, and latch it.

Checking the Refrigerant Pressure

When using the air-conditioning system the operating pressure is different on the suction (low pressure) side and the pressure (high pressure) side of the compressor; refer to Figure 38.

This pressure difference is influenced by the speed of the compressor, the inside temperature of the vehicle, the outside air temperature and the relative air humidity.

Pressures that differ from those in the table below indicate a possible fault in the system.

To check the pressures, set the compressor speed to 2000 rpm with an air temperature between 20 and 40 degrees C (68 and 104 degrees F). Operate the blower at position 3 (fastest speed setting).

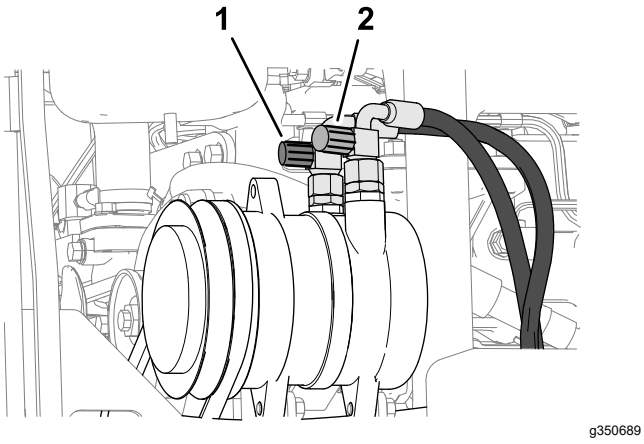

Figure 38

1. Red cap (high-pressure port)
2. Blue cap (low-pressure port)

System Refrigerant Pressures

Outside Temperature	Low-Pressure Side	High-Pressure Side
20° C (68° F)	1.7 to 2.1 bar (24.7 to 30.5 psi)	10 to 14 bar (145 to 203 psi)
25° C (77° F)	1.8 to 2.2 bar (26.1 to 31.9 psi)	12 to 16 bar (174 to 232 psi)
30° C (86° F)	1.9 to 2.3 bar (27.6 to 33.4 psi)	14 to 18 bar (203 to 261 psi)

Troubleshooting the Pressure Readings

During the compression test, deviations from the values in the table may be measured. Locating the cause can determine whether a part requires repair or replacement.

The following is a short list of some pressure deviation that may be measured and some possible causes.

- **Pressure on high-pressure manometer too high**
  - The air volume in the condenser is too small.
  - Refrigerant quantity is too high
  - The dryer/filter is blocked.
- **Pressure on high-pressure manometer is too low**
  - The refrigerant quantity is too low (check the sight glass).
  - The compressor speed is too low (check the drive belt for slip/tension).
  - There is a fault with the compressor.
- **Pressure on low-pressure manometer too high**
  - The expansion valve is incorrect.
  - The compressor speed is too low (check the drive belt for slip/tension).
  - There is a fault with the compressor.
- **Pressure on low-pressure manometer too low**
  - There is restriction in the suction or pressure hoses.
  - The expansion valve is incorrect.
  - The refrigerant quantity is too low (examine the sediment bowl).
  - The air volume in the evaporator is too small.

  Have a qualified person examine and repair all deviations in pressure from the values in the table.

Important: **Do not allow refrigerant to discharge into the atmosphere. Before opening or disconnecting parts from the refrigerant circuit, empty the refrigerant into a specified recycling bottle, and dispose of it correctly.**

Always use genuine Toro spare parts when repairing or servicing the air-conditioning system.

Washing the Machine and Cab

When washing the machine and the cab, do not direct water into the roof area.

Important: **Do not use brackish or reclaimed water to clean the machine.**

Storage

Refer to the traction unit *Operator's Manual* for details on storing the machine.

Schematics

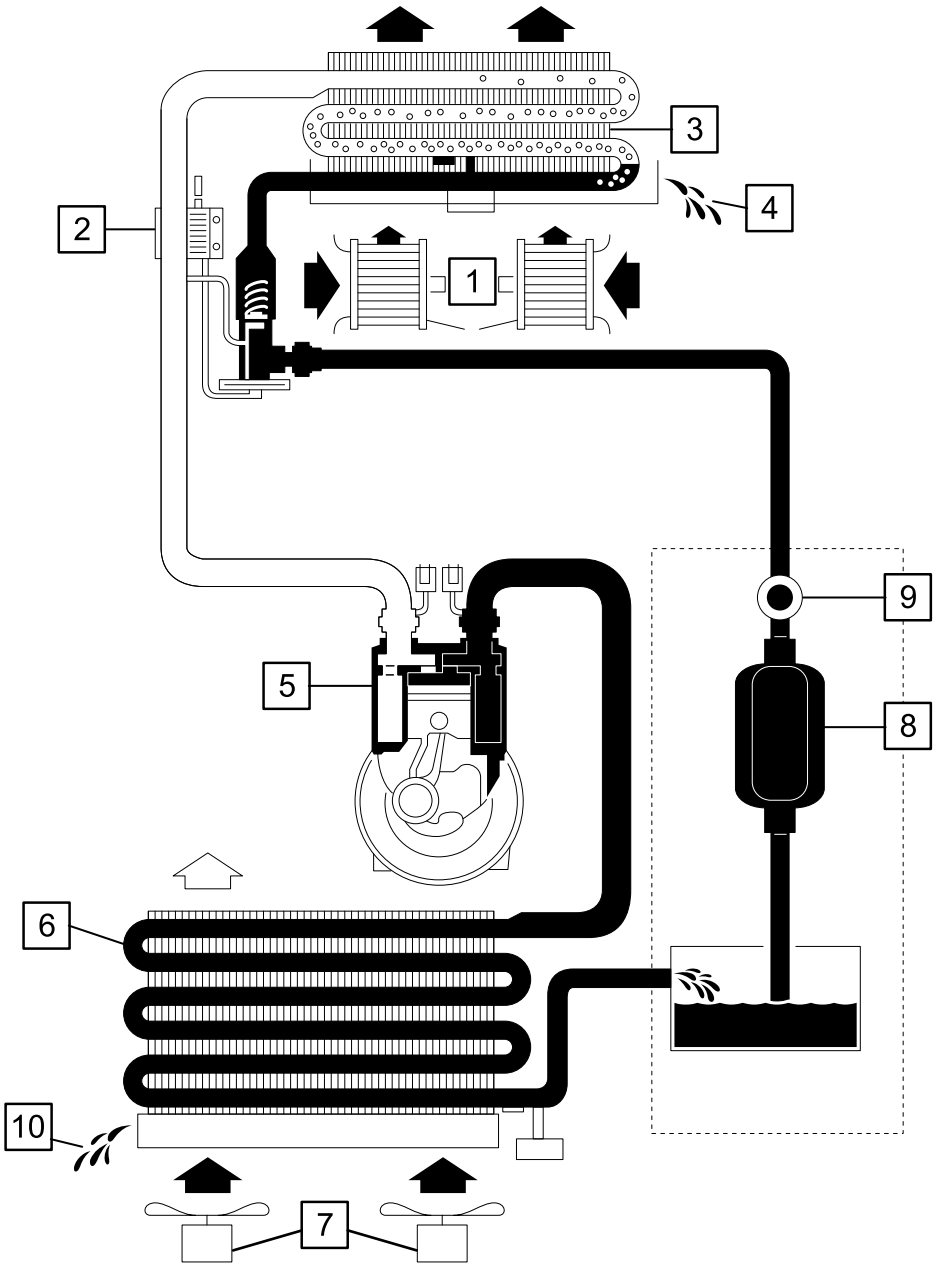

g350749

1	Radial blower
2	Expansion valve
3	Evaporator (combined with heat exchanger for heating)
4	Evaporator—water drain
5	Compressor
6	Condenser
7	Axial fans
8	Dryer/filter
9	Sight glass
10	Drain

A/C System Schematic (Rev. A)

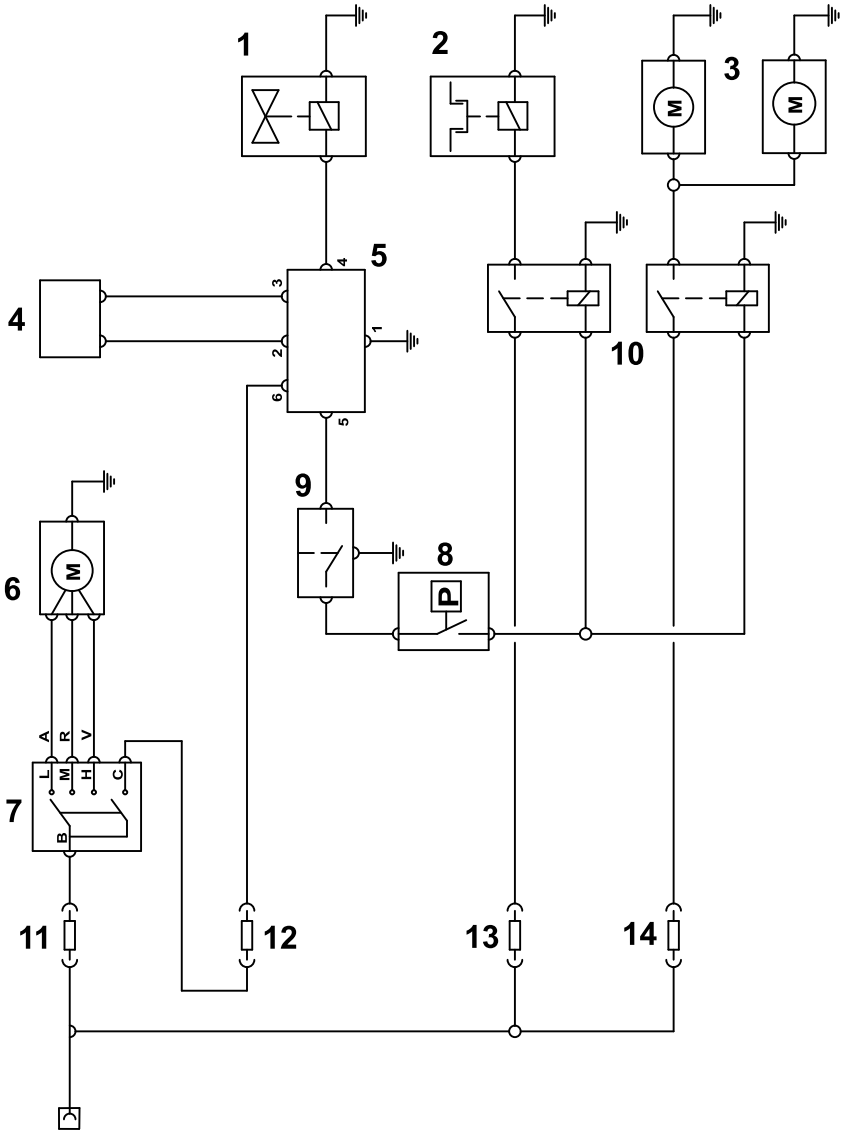

g350760

1	Hot water heating valve
2	Compressor with magnetic clutch
3	Twin axial rear fans
4	Temperature sensor
5	Electronic-regulator/temperature-control
6	Radial blower fan
7	Blower-speed switch
8	Pressure switch
9	A/C switch
10	Relay
11	Fuse (15 A)—position 4
12	Fuse (5 A)—position 7
13	Fuse (5 A)—position 6
14	Fuse (25 A)—position 3

A/C Electrical Schematic (Rev. B)

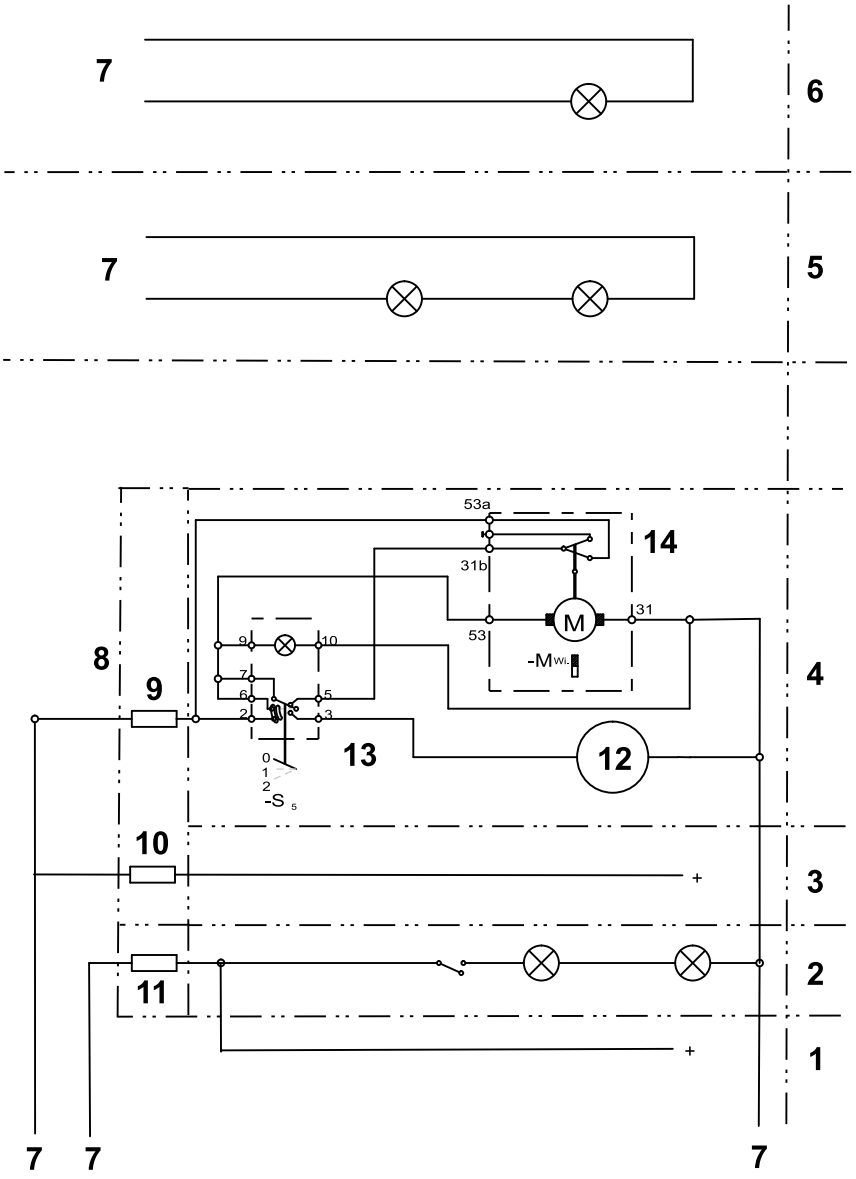

g350761

1	Constant power—radio and interior light
2	Interior lights circuit
3	Switched power—radio
4	Washer/wiper
5	License-plate light
6	Flashing beacon
7	Machine wire harness interface
8	Fuse block
9	Fuse (7.5 A)—position 5
10	Fuse (10 A)—position 2
11	Fuse (3 A)—position 1
12	Washer pump
13	Washer/wiper switch
14	Wiper motor

Cab Electrical Schematic (Rev. A)

Notes:

Notes:

Notes:

EEA/UK Privacy Notice

Toro's Use of Your Personal Information

The Toro Company ("Toro") respects your privacy. When you purchase our products, we may collect certain personal information about you, either directly from you or through your local Toro company or dealer. Toro uses this information to fulfil contractual obligations - such as to register your warranty, process your warranty claim or to contact you in the event of a product recall - and for legitimate business purposes - such as to gauge customer satisfaction, improve our products or provide you with product information which may be of interest. Toro may share your information with our subsidiaries, affiliates, dealers or other business partners in connection these activities. We may also disclose personal information when required by law or in connection with the sale, purchase or merger of a business. We will never sell your personal information to any other company for marketing purposes.

Retention of your Personal Information

Toro will keep your personal information as long as it is relevant for the above purposes and in accordance with legal requirements. For more information about applicable retention periods please contact legal@toro.com.

Toro's Commitment to Security

Your personal information may be processed in the US or another country which may have less strict data protection laws than your country of residence. Whenever we transfer your information outside of your country of residence, we will take legally required steps to ensure that appropriate safeguards are in place to protect your information and to make sure it is treated securely.

Access and Correction

You may have the right to correct or review your personal data, or object to or restrict the processing of your data. To do so, please contact us by email at legal@toro.com. If you have concerns about the way in which Toro has handled your information, we encourage you to raise this directly with us. Please note that European residents have the right to complain to your Data Protection Authority.

The Toro Warranty

Two-Year or 1,500 Hours Limited Warranty

Conditions and Products Covered

The Toro Company warrants your Toro Commercial product (“Product”) to be free from defects in materials or workmanship for 2 years or 1,500 operational hours*, whichever occurs first. This warranty is applicable to all products with the exception of Aerators (refer to separate warranty statements for these products). Where a warrantable condition exists, we will repair the Product at no cost to you including diagnostics, labor, parts, and transportation. This warranty begins on the date the Product is delivered to the original retail purchaser.
* Product equipped with an hour meter.

Instructions for Obtaining Warranty Service

You are responsible for notifying the Commercial Products Distributor or Authorized Commercial Products Dealer from whom you purchased the Product as soon as you believe a warrantable condition exists. If you need help locating a Commercial Products Distributor or Authorized Dealer, or if you have questions regarding your warranty rights or responsibilities, you may contact us at:

Toro Commercial Products Service Department
8111 Lyndale Avenue South
Bloomington, MN 55420-1196

952–888–8801 or 800–952–2740
E-mail: commercial.warranty@toro.com

Owner Responsibilities

As the product owner, you are responsible for required maintenance and adjustments stated in your *Operator's Manual*. Repairs for product issues caused by failure to perform required maintenance and adjustments are not covered under this warranty.

Items and Conditions Not Covered

Not all product failures or malfunctions that occur during the warranty period are defects in materials or workmanship. This warranty does not cover the following:

- Product failures which result from the use of non-Toro replacement parts, or from installation and use of add-on, or modified non-Toro branded accessories and products.
- Product failures which result from failure to perform recommended maintenance and/or adjustments.
- Product failures which result from operating the Product in an abusive, negligent, or reckless manner.
- Parts consumed through use that are not defective. Examples of parts which are consumed, or used up, during normal Product operation include, but are not limited to, brake pads and linings, clutch linings, blades, reels, rollers and bearings (sealed or greasable), bed knives, spark plugs, castor wheels and bearings, tires, filters, belts, and certain sprayer components such as diaphragms, nozzles, flow meters, and check valves.
- Failures caused by outside influence, including, but not limited to, weather, storage practices, contamination, use of unapproved fuels, coolants, lubricants, additives, fertilizers, water, or chemicals.
- Failure or performance issues due to the use of fuels (e.g. gasoline, diesel, or biodiesel) that do not conform to their respective industry standards.
- Normal noise, vibration, wear and tear, and deterioration. Normal “wear and tear” includes, but is not limited to, damage to seats due to wear or abrasion, worn painted surfaces, scratched decals or windows.

Parts

Parts scheduled for replacement as required maintenance are warranted for the period of time up to the scheduled replacement time for that part. Parts replaced under this warranty are covered for the duration of the original product warranty and become the property of Toro. Toro will make the final decision whether to repair any existing part or assembly or replace it. Toro may use remanufactured parts for warranty repairs.

Deep Cycle and Lithium-Ion Battery Warranty

Deep cycle and Lithium-Ion batteries have a specified total number of kilowatt-hours they can deliver during their lifetime. Operating, recharging, and maintenance techniques can extend or reduce total battery life. As the batteries in this product are consumed, the amount of useful work between charging intervals will slowly decrease until the battery is completely worn out. Replacement of worn out batteries, due to normal consumption, is the responsibility of the product owner. Note: (Lithium-Ion battery only): Refer to the battery warranty for additional information.

Lifetime Crankshaft Warranty (ProStripe 02657 Model Only)

The Prostripe which is fitted with a genuine Toro Friction Disc and Crank-Safe Blade Brake Clutch (integrated Blade Brake Clutch (BBC) + Friction Disc assembly) as original equipment and used by the original purchaser in accordance with recommended operating and maintenance procedures, are covered by a Lifetime Warranty against engine crankshaft bending. Machines fitted with friction washers, Blade Brake Clutch (BBC) units and other such devices are not covered by the Lifetime Crankshaft Warranty.

Maintenance is at Owner’s Expense

Engine tune-up, lubrication, cleaning and polishing, replacement of filters, coolant, and completing recommended maintenance are some of the normal services Toro products require that are at the owner’s expense.

General Conditions

Repair by an Authorized Toro Distributor or Dealer is your sole remedy under this warranty.

The Toro Company is not liable for indirect, incidental or consequential damages in connection with the use of the Toro Products covered by this warranty, including any cost or expense of providing substitute equipment or service during reasonable periods of malfunction or non-use pending completion of repairs under this warranty. Except for the Emissions warranty referenced below, if applicable, there is no other express warranty. All implied warranties of merchantability and fitness for use are limited to the duration of this express warranty.

Some states do not allow exclusions of incidental or consequential damages, or limitations on how long an implied warranty lasts, so the above exclusions and limitations may not apply to you. This warranty gives you specific legal rights, and you may also have other rights which vary from state to state.

Note Regarding Emissions Warranty

The Emissions Control System on your Product may be covered by a separate warranty meeting requirements established by the U.S. Environmental Protection Agency (EPA) and/or the California Air Resources Board (CARB). The hour limitations set forth above do not apply to the Emissions Control System Warranty. Refer to the Engine Emission Control Warranty Statement supplied with your product or contained in the engine manufacturer’s documentation.

Countries Other than the United States or Canada

Customers who have purchased Toro products exported from the United States or Canada should contact their Toro Distributor (Dealer) to obtain guarantee policies for your country, province, or state. If for any reason you are dissatisfied with your Distributor's service or have difficulty obtaining guarantee information, contact your Authorized Toro Service Center.



Count on it.