Form No. 3327-963

TORO®

# 622 Power Throw®

## Snowthrower

**Model No. 38063—230000001 and Up**

PROTOTYPE

# Operator's Manual

CE

International English (GB)

This spark ignition system complies with Canadian ICES-002.

Ce système d'allumage par étincelle de véhicule est conforme à la norme NMB-002 du Canada.

**The enclosed Engine Owner's Manual is supplied for information regarding The U.S. Environmental Protection Agency (EPA) and the California Emission Control Regulation of emission systems, maintenance and warranty.**

**Keep this engine Owner's Manual with your unit. Should this engine Owner's Manual become damaged or illegible, replace immediately. Replacements may be ordered through the engine manufacturer.**

# Contents


| | Page |
|---|---|
| Introduction | 2 |
| Safety | 3 |
| Safe Operating Practices | 3 |
| Toro Snowthrower Safety | 4 |
| Sound Pressure | 5 |
| Sound Power | 5 |
| Vibration | 5 |
| Safety and Instruction Decals | 6 |
| Assembly | 8 |
| Loose Parts | 8 |
| Installing the Handle Assembly | 9 |
| Installing the Speed Selector Rod | 9 |
| Installing the Traction Rod | 10 |
| Installing the Auger/Impeller Drive Control Linkage | 10 |
| Installing the Chute Control Rod | 11 |
| Securing the Chute Deflector | 12 |
| Before Starting | 12 |
| Filling the Engine Crankcase with Oil | 12 |
| Filling the Fuel Tank with Gasoline | 13 |
| Checking the Tire Pressure | 13 |
| Reviewing the Maintenance Schedule | 14 |
| Operation | 14 |
| Operating Controls | 14 |
| Removing the Carburetor Heater Box | 15 |
| Installing the Carburetor Heater Box | 15 |
| Starting the Engine | 15 |
| Stopping the Engine | 16 |
| Freewheeling or Self-propel Drive | 16 |
| Snowthrowing Tips | 16 |
| Maintenance | 18 |
| Recommended Maintenance Schedule | 18 |
| Checking the Engine Oil Level | 19 |
| Checking the Auger Gearbox Grease | 19 |
| Adjusting the Skids and the Scraper | 19 |
| Adjusting the Speed Selector | 20 |
| Adjusting the Traction Drive Belt | 21 |
| Replacing the Traction Drive Belt | 21 |
| Adjusting the Auger/Impeller Drive Belt | 23 |
| Replacing the Auger/Impeller Drive Belt | 23 |
| Changing the Engine Oil | 23 |
| Lubricating the Snowthrower | 24 |
| Replacing the Spark Plug | 24 |
| Emptying the Fuel Tank | 24 |
| Storage | 25 |
| Preparing the Fuel System | 25 |
| Preparing the Engine | 25 |
| Preparing the Snowthrower | 25 |
| Troubleshooting | 26 |


# Introduction

Read this manual carefully to learn how to operate and maintain your product properly. The information in this manual can help you and others avoid injury and product damage. Although Toro designs and produces safe products, you are responsible for operating the product properly and safely.

Whenever you need service, genuine Toro parts, or additional information, contact an Authorized Service Dealer or Toro Customer Service and have the model and serial numbers of your product ready. Figure 1 illustrates the location of the model and serial numbers on the product.

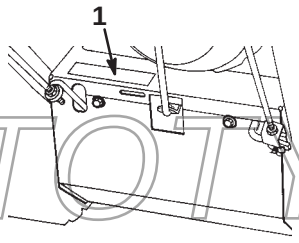


**Figure 1**

1. Location of the model and serial numbers

PROTOTYPE

Write the product model and serial numbers in the space below:

**Model No.** _____

**Serial No.** _____

**© 2002 by The Toro Company**
**8111 Lyndale Avenue South**
**Bloomington, MN 55420-1196**

All Rights Reserved

Printed in the USA

This manual identifies potential hazards and has special safety messages that help you and others avoid personal injury and even death. ***Danger***, ***Warning***, and ***Caution*** are signal words used to identify the level of hazard. However, regardless of the hazard, be extremely careful.

***Danger*** signals an extreme hazard that **will** cause serious injury or death if you do not follow the recommended precautions.

***Warning*** signals a hazard that **may** cause serious injury or death if you do not follow the recommended precautions.

***Caution*** signals a hazard that may cause minor or moderate injury if you do not follow the recommended precautions.

This manual uses 2 other words to highlight information. **Important** calls attention to special mechanical information and **Note:** emphasizes general information worthy of special attention.

# Safety

**This 2-stage snowthrower meets or exceeds the ISO 8437 standard in effect at the time of production.**

**To ensure maximum safety and best performance, and to gain knowledge of the product, it is essential that you and any other operator of the snowthrower read and understand the contents of this manual before the engine is ever started.**

**⚠ This is the safety alert symbol. It is used to alert you to potential personal injury hazards. Obey all safety messages that follow this symbol to avoid possible injury or death.**

**Improperly using or maintaining this snowthrower could result in injury or death. To reduce this potential, comply with the following safety instructions.**

## Safe Operating Practices

The following instructions have been adapted from the ANSI/OPEI B71.3–1995 standard and the ISO 8437:1989 standard. Information or terminology specific to Toro snowthrowers is enclosed in parenthesis.

PROTOTYPE

### Training

- Read the operator's manual carefully. Be thoroughly familiar with the controls and the proper use of the equipment. Know how to stop the unit and disengage the controls quickly.
- Never allow children to operate the snowthrower. Never allow adults to operate the snowthrower without proper instruction.
- Keep the area of operation clear of all persons (particularly small children) and pets.
- Exercise caution to avoid slipping or falling, especially when operating the snowthrower in reverse.

### Preparation

- Thoroughly inspect the area where you will use the snowthrower. Remove all doormats, sleds, boards, wires, and other foreign objects.
- Disengage all clutches and shift the snowthrower into neutral before starting the engine.
- Do not operate the snowthrower without wearing adequate winter garments. Wear footwear that will improve your footing on slippery surfaces.
- Handle fuel with care; it is highly flammable.
  - Use an approved fuel container.
  - Never add fuel to a running or hot engine.
  - Fill the fuel tank outdoors with extreme care. Never fill the fuel tank indoors.
  - Replace the fuel tank cap securely and wipe up any spilled fuel.
- Use only the power cord supplied with the snowthrower and a receptacle appropriate for use with the power cord for electric-starting motors.
- Adjust the auger housing height to clear gravel or crushed rock surface.
- Never attempt to make any adjustments while the engine is running, except where specifically recommended by Toro.
- Let the engine and the snowthrower adjust to the outdoor temperature before starting to clear snow.
- Operating any powered machine can result in foreign objects being thrown into the eyes. Always wear safety glasses or eye shields while operating, adjusting, or repairing the snowthrower.

### Operation

- Do not put hands or feet near or under rotating parts. Keep clear of the discharge opening at all times.
- Exercise extreme caution when operating on or crossing gravel drives, walks, or roads. Stay alert for hidden hazards or traffic.
- After striking a foreign object, stop the engine, remove the wire from the spark plug, thoroughly inspect the snowthrower for any damage, and repair the damage before operating the snowthrower.
- If the unit should start to vibrate abnormally, stop the engine and check immediately for the cause. Vibration is generally a warning of trouble.

- Stop the engine whenever you leave the operating position, before unclogging the auger/impeller housing or discharge chute, and when making any repairs, adjustments, or inspections.
- When cleaning, repairing, or inspecting, make certain that the auger/impeller and all moving parts have stopped. Disconnect the spark-plug wire, and keep the wire away from the spark plug to prevent someone from accidentally starting the engine.
- Do not run the engine indoors, except when starting it and for moving the snowthrower in or out of the building. Open the outside doors; exhaust fumes are dangerous.
- Do not clear snow across the face of slopes. Exercise extreme caution when changing direction on slopes. Do not attempt to clear steep slopes.
- Never operate the snowthrower without proper guards or other safety devices in place.
- Never operate the snowthrower near glass enclosures, automobiles, window wells, and drop-offs without properly adjusting the snow discharge angle. Keep children and pets away.
- Do not overload the machine capacity by attempting to clear snow at too fast a rate.
- Never operate the machine at high transport speeds on slippery surfaces. Look behind and use care when moving in reverse.
- Never direct the discharge at bystanders or allow anyone in front of the unit.
- Disengage the power to the auger/impeller when the snowthrower is being transported or when not in use.
- Use only attachments and accessories approved by Toro, such as wheel weights, counterweights, and cabs. (Contact your Authorized Service Dealer for accessories available for your snowthrower.)
- Never operate the snowthrower without good visibility or light. Always be sure of your footing, and keep a firm hold on the handle. Walk; never run.

### Maintenance and Storage

- Check all fasteners at frequent intervals for proper tightness to be sure that the equipment is in safe working condition.
- Never store the machine with fuel in the fuel tank inside a building where ignition sources are present, such as hot water and space heaters and clothes dryers. Allow the engine to cool before storing in any enclosure.
- Always refer to this operator's manual for important details if the snowthrower is to be stored for an extended period.
- Maintain or replace safety and instruction labels when necessary.
- Run the engine run for a few minutes after clearing the snow to prevent the auger/impeller from freezing.

## Toro Snowthrower Safety

The following list contains safety information specific to Toro products or other safety information that you must know.

- **Rotating auger/impeller can cut off or injure fingers or hands.** Stay behind the handles and away from the discharge opening while operating the snowthrower. **Keep your face, hands, feet, and any other part of your body or clothing away from moving or rotating parts.**
- Before adjusting, cleaning, repairing, and inspecting the snowthrower, and before unclogging the discharge chute, **stop the engine, remove the key, and wait for all moving parts to stop**. Also, disconnect the wire from the spark plug and keep it away from the spark plug to prevent someone from accidentally starting the engine.
- Use a stick, **not your hands**, to remove obstructions from the discharge chute.
- **Before** leaving the operating position, stop the engine, remove the key, and wait for all moving parts to stop.
- Do not wear loose-fitting clothing that could get caught in moving parts.
- If a shield, safety device, or decal is damaged, illegible, or lost, repair or replace it before beginning operation. Also, tighten any loose fasteners.
- **Do not** smoke while handling gasoline.
- When operating the snowthrower on slopes, use the lower gear. For Power Shift® snowthrowers, use the rear wheel position.
- **Do not** use the snowthrower on a roof.
- Do not touch the engine while it is running or soon after it has stopped because the engine may be hot enough to cause a burn. Do not add oil or check the oil level in the crankcase while the engine is running.
- Perform only those maintenance instructions described in this manual. Before performing any maintenance, service, or adjustment, stop the engine, remove the key and disconnect the wire from the spark plug. Keeping the wire away from the spark plug to prevent someone from accidentally starting the engine. If major repairs are ever needed, contact your Authorized Service Dealer.
- Do not change the governor settings on the engine.

PROTOTYPE

- When storing the snowthrower for more than 30 days, drain the fuel from the fuel tank to prevent a potential hazard. Store fuel in an approved fuel container. Remove the key from the ignition switch before storing the snowthrower.
- To ensure the best performance and safety, purchase only genuine Toro replacement parts and accessories.

## Sound Pressure

This unit has a maximum sound pressure level at the operator's ear of 90 dBA, based on measurements of identical machines per Directive 98/37/EC.

## Sound Power

This unit has a guaranteed sound power level of 105 dBA, based on measurements of identical machines per Directive 2000/14/EC.

## Vibration

This unit does not exceed a hand/arm vibration level of 14.3 $m/s^2$, based on measurements of identical machines per Directive 98/37/EC.

### Before Operating

**Read and understand the contents of this manual before operating the snowthrower. Become familiar with all controls and know how to stop the engine quickly.**

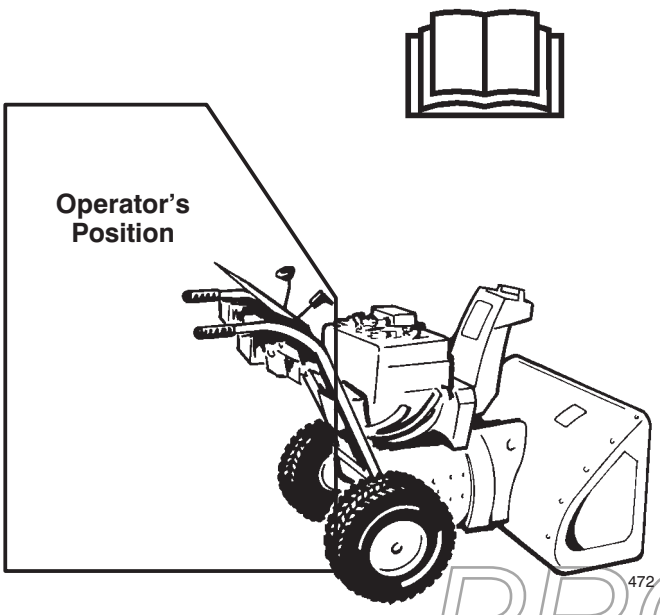


**Caution: Improper use may result in loss of fingers, hands, or feet.**

**There is a high-speed impeller within two inches of the opening.**

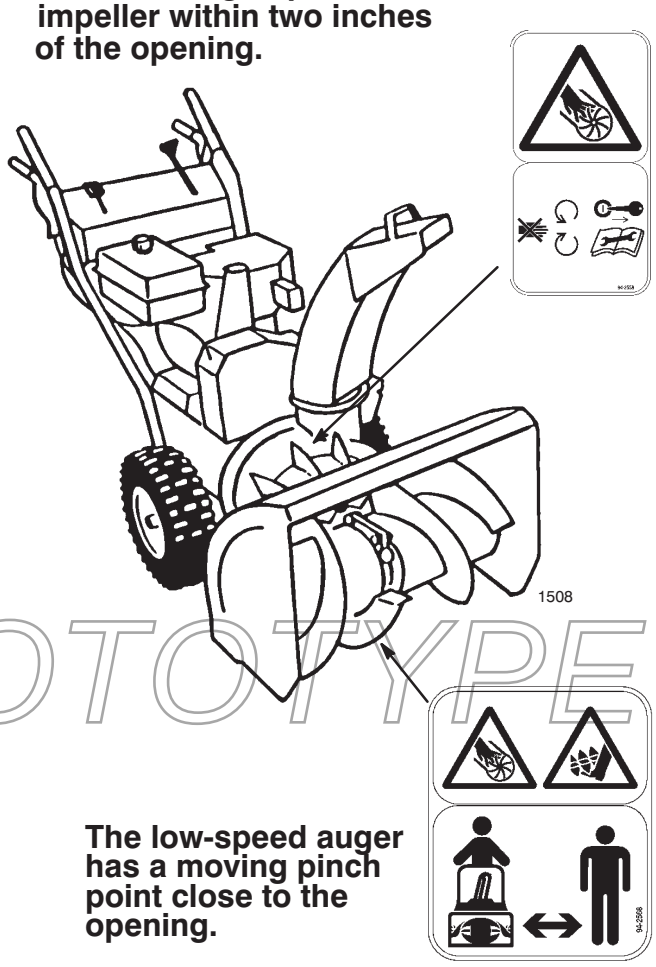


**The low-speed auger has a moving pinch point close to the opening.**

PROTOTYPE

# Safety and Instruction Decals

Safety decals and instructions are easily visible to the operator and are located near any area of potential danger. Replace any decal that is damaged or lost.

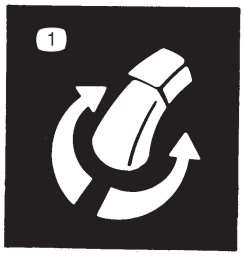


**63-3510**

1. Chute direction control




**94-2568**

1. Cutting/dismemberment in impeller and auger hazard—stay away from moving parts
2. Thrown object hazard—keep bystanders away




**94-2558**

1. Cutting/dismemberment in impeller hazard—stay away from moving parts, stop the engine, and remove the key before performing maintenance

PROTOTYPE



**99-3215**

1. Traction drive
2. Squeeze the control handle to engage
3. Release the control handle to disengage
4. Warning—read the *Operator's Manual*
5. Thrown object hazard—keep bystanders away
6. Cutting/dismemberment in impeller and auger hazard—stay away from moving parts, stop the engine, and remove the key before performing maintenance
7. Warning—stop the engine before leaving the machine
8. Auger/impeller drive




**100-3449**

1. Forward drive speed settings
2. Speed selector
3. Reverse drive speed setting

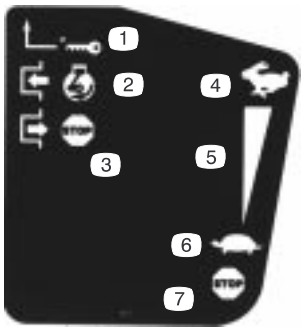

**Tecumseh Part No. 35063**

1. Key ignition
2. Engage to start the engine
3. Disengage to stop the engine
4. Fast
5. Increasing scale
6. Slow
7. Stop the engine

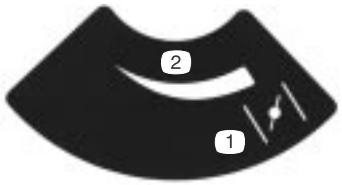

**Tecumseh Part No. 34418**

1. Choke
2. Increasing scale




**Tecumseh Part No. 36501**

1. Primer

PROTOTYPE



**Tecumseh Part No. 37119**

1. Warning—hot surface; do not touch

# Assembly

**Note:** Determine the left and right sides of the machine from the normal operating position.

## Loose Parts

| DESCRIPTION | QTY. | USE |
|---|---|---|
| Handle assembly | 1 | Installing the handle assembly |
| Bolts | 4 | |
| Curved washers | 4 | |
| Flange nut | 1 | |
| Speed selector rod | 1 | Installing the speed selector rod |
| Cotter pin | 1 | |
| Flat washer | 1 | |
| Flange locknut | 1 | Installing the traction rod |
| Clevis pin | 1 | Installing the auger/impeller drive control linkage |
| Cotter pin | 1 | |
| Chute control rod assembly (Rod and bracket, worm gear, and bracket) | 1 | Installing the chute control rod |
| Bolt, pyramidal washer, and locknut | 1 | |
| Bolt | 1 | |
| Locknut | 1 | |
| Carriage bolt | 1 | Securing the chute deflector |
| Rubber washer | 1 | |
| Friction plate | 1 | |
| Large flat washer | 1 | |
| Curved washer | 1 | |
| Locknut | 1 | |
| Ignition key | 1 | Starting and stopping the engine |

PROTOTYPE

# Installing the Handle Assembly

1. Remove the tie straps that secure the control rods to the handle assembly.
2. Remove the axle pins from both wheels (Fig. 2) and slide the wheels outward on the axle approximately 1 inch (2.5 centimeters).

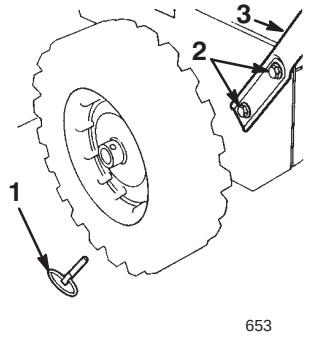


**Figure 2**

1. Axle pin (2)
2. Cap screws and curved washers (4)
3. Handle assembly

3. Thread a flange nut (not the flange locknut) with the flange down onto the traction rod attached to the left side of the handle assembly (Fig. 3).

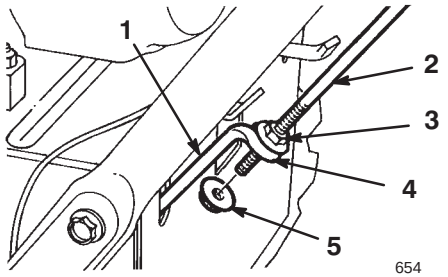


**Figure 3**

1. Lower traction rod
2. Traction rod
3. Flange nut
4. Loop
5. Flange locknut

4. Position the left side of the handle assembly against the side of the snowthrower and insert the end of the traction rod through the loop in the lower traction rod (Fig. 3).
5. Align the holes in the left side of the handle assembly with the holes in the left side plate, and secure the handle with 2 cap screws and curved washers until they are finger tight (Fig. 2).

   **Note:** The concave side of the curved washer goes against the outside of the handle.

6. Align the holes in the right side of the handle assembly with the holes in the right side plate, and secure the handle with 2 cap screws and curved washers until they are finger tight.
7. Ensure that the handles are at the same height, then tighten the handle fasteners securely.
8. Slide the wheels inward and insert each axle pin through the hole in each wheel hub and through the **inner** hole of the axle (Fig. 4).

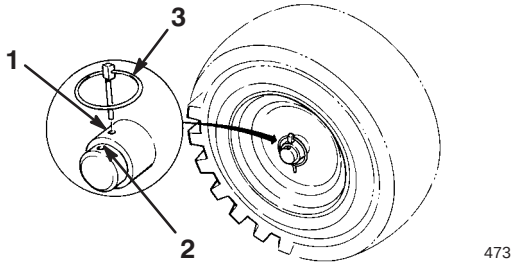


**Figure 4**

1. Inner axle hole and wheel hub
2. Outer axle hole
3. Axle pin

**Note:** To use tire chains (optional), install the axle pins through the **outer** axle holes.

# Installing the Speed Selector Rod

1. Pull the speed selector arm (Fig. 5) to the most outward position.

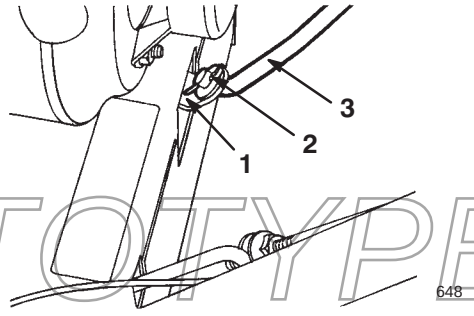


**Figure 5**

1. Speed selector arm
2. Flat washer and cotter pin
3. Speed selector rod

2. Move the speed selector (Fig. 13) on the control panel to the **R** (**Reverse**) position.
3. Install the speed selector rod into the selector arm, add a flat washer on the selector rod, and secure it with a cotter pin (Fig. 5).

PROTOTYPE

# Installing the Traction Rod

1. Thread the flange locknut (flange side up) onto the bottom of the traction control rod, below the loop in the lower traction rod (Fig. 3).
2. Adjust the 2 flange nuts up or down on the traction rod until the distance between the top of the handgrip and the bottom of the traction control lever is approximately 4-3/8 inches (11 centimeters) as shown in Figure 6.

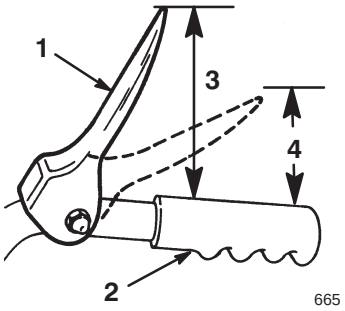


**Figure 6**

1. Traction control lever
2. Handgrip
3. 4-3/8 inches (11 centimeters)
4. 1 to 2 inches (2.5 to 5.0 centimeters)

3. Tighten the 2 flange nuts until they are finger tight.
4. Move the speed selector (Fig. 13) into third gear.

   **Note:** If the speed selector does not move into third gear, adjust the speed selector before continuing. Refer to Adjusting the Speed Selector on page 20.
5. Slowly pull the snowthrower backward while slowly pressing the traction control lever toward the handgrip.

   **Note:** The adjustment is correct when the wheels stop rolling backward and the distance between the top of the handgrip and the bottom of the traction control lever is 1 to 2 inches (2.5 to 5.0 centimeters) as shown in Figure 6.
6. Adjust the 2 flange nuts, if necessary, to obtain the proper distance between the top of the handgrip and the bottom of the traction control lever.
7. Tighten the flange nuts securely.

# Installing the Auger/Impeller Drive Control Linkage

1. Loosen the jam nut above the clevis on the upper control rod (Fig. 7).

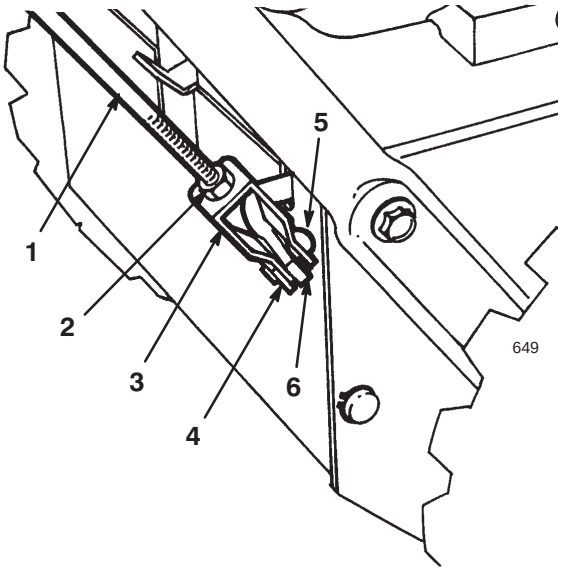


**Figure 7**

1. Upper control rod
2. Jam nut
3. Clevis
4. Cotter pin
5. Clevis pin
6. Lower control rod

2. Align the holes in the clevis and the lower control rod and insert the clevis pin (Fig. 7).
3. Check the distance between the top of the handgrip and the bottom of the auger/impeller drive control lever (Fig. 8). The distance should be approximately 4 inches (ten centimeters).

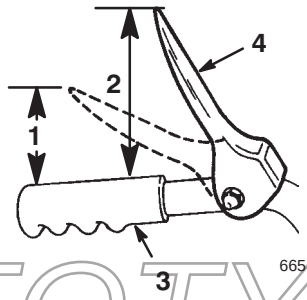


**Figure 8**

1. 1 to 2 inches (2.5 to 5.0 centimeters)
2. 4 inches (10 centimeters)
3. Handgrip
4. Auger/impeller control lever

4. Press the auger/impeller drive control lever slowly toward the handgrip.

   **Note:** The amount of force needed to compress the lever increases noticeably when you remove the slack from the auger/impeller drive belt (approximately 1/2 of the lever movement). The adjustment is correct when the force **begins** to increase and the distance between

PROTOTYPE

the top of the handgrip and the bottom of the auger/impeller drive control lever is 1 to 2 inches (2.5 to 5.0 centimeters) as shown in Figure 8.

**Note:** If the force does not noticeably increase, remove the belt cover (refer to step 4 of Replacing the Traction Drive Belt on page 21) and measure 2 inches (5 centimeters) above the handgrip at the point where you remove the slack from the auger/impeller drive belt.

**5.** To adjust the distance:

A. Remove the clevis pin.

B. Loosen the jam nut.

C. Thread the clevis up or down to increase or decrease the distance between the top of the handgrip and the bottom of the auger/impeller drive control lever (Fig. 7).

**6.** When the adjustment is correct, install the clevis pin and secure it in place with the cotter pin (Fig. 7).

**7.** Tighten the jam nut to secure the clevis (Fig. 7).

## Installing the Chute Control Rod

**1.** Assemble the chute control bracket and rod to the left side of the handle assembly with the bolt and the locknut as shown in Figure 9.

**Note:** Leave the locknut loose.

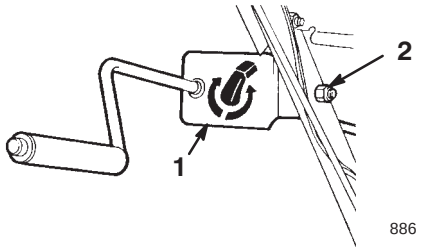


**Figure 9**

1. Chute control bracket and rod
2. Bolt and locknut

**2.** Apply No. 2 general purpose grease to the worm gear (Fig. 10).

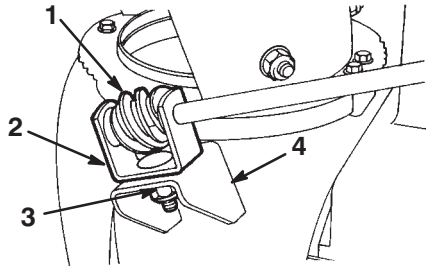


**Figure 10**

1. Worm gear
2. Bracket
3. Bolt, pyramidal washer, and locknut
4. Mounting flange

**3.** Loosely mount the worm gear and the bracket to the mounting flange with a bolt, a pyramidal washer, and a locknut as shown in Figure 10.

**4.** Slide the worm gear into the teeth of the chute retaining ring and tighten the locknut (Fig. 10).

**5.** Tighten the locknut that secures the chute control bracket (Fig. 9).

**6.** Check the operation of the chute control rod, and move the worm gear slightly outward if it binds.

PROTOTYPE

## Securing the Chute Deflector

1. Pivot the deflector upward and back until the deflector stop passes over the lip on the top of the discharge chute.
2. Secure the left side of the deflector to the discharge chute using the parts as shown in Figure 11.

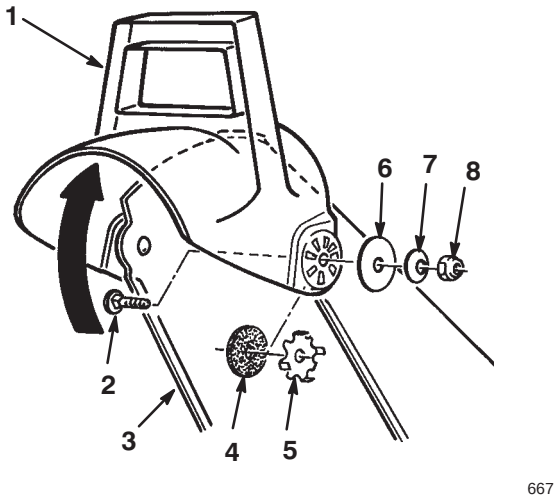


**Figure 11**

1. Deflector
2. Carriage bolt
3. Discharge chute
4. Rubber washer
5. Friction plate
6. Large flat washer
7. Curved washer
8. Locknut

**Note:** Position the rubber washer and the friction plate between the discharge chute and the deflector, and ensure that the friction plate tabs fit into the holes in the deflector.

**Note:** The concave side of the curved washers go against the large flat washers.

3. Tighten the nuts on both sides of the deflector. **Do not overtighten the nuts.**

# Before Starting

PROTOTYPE

## Filling the Engine Crankcase with Oil

The engine comes from the factory with only a few ounces of oil in the crankcase. Before starting the engine, add oil. The crankcase holds 21 ounces (0.62 liters) of oil; however, because there is some oil in the crankcase, do not add the full amount at one time. Use only a high-quality, SAE 5W–30 or SAE 10 weight detergent oil that has the American Petroleum Institute (API) service classification SF, SG, SH, or SJ. For extremely cold conditions (below 0°F or –18°C), use 0W–30 weight detergent oil that has the American Petroleum Institute (API) service classification SF, SG, SH, or SJ.

To add oil:

1. Move the snowthrower to a level surface to ensure an accurate oil level reading.
2. Clean around the dipstick (Fig. 12).

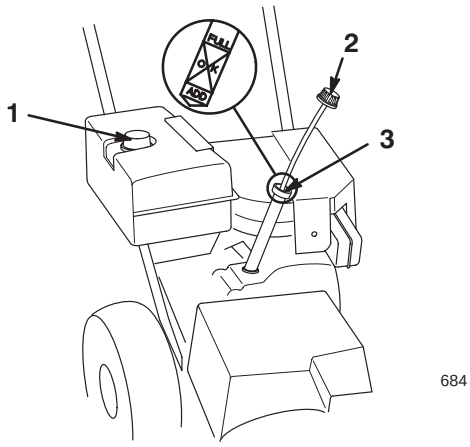


**Figure 12**

1. Fuel tank cap
2. Dipstick
3. Filler hole

3. Remove the dipstick by rotating the cap counterclockwise and pulling it out (Fig. 12).
4. Slowly pour about 3/4 of the crankcase capacity of oil into the crankcase.
5. Wipe the dipstick clean with a clean cloth.
6. Install the dipstick into the filler neck, then remove it.

**Note:** To ensure an accurate oil level reading, you must fully install the dipstick.

7. Read the oil level on the dipstick.
8. If the oil level is below the **Add** mark on the dipstick, slowly pour only enough oil into the filler hole to raise the oil level to the **Full** mark on the dipstick.

**Important** Do not overfill the crankcase with oil and run the engine; engine damage will result. Drain the excess oil until the oil level on the dipstick reads **Full**.

9. Insert the dipstick into the filler neck and rotate the cap clockwise until it is tight.

## Filling the Fuel Tank with Gasoline

For best results, use clean, fresh, lead-free gasoline with an octane rating of 87 or higher. To ensure freshness, purchase only the quantity of gasoline that you expect to use in 30 days. Using unleaded gasoline results in fewer combustion deposits and longer engine life. You may use leaded gasoline if unleaded gasoline is not available.

**Important** Do not add oil to the gasoline.

**Important** Do not use methanol, gasoline containing methanol, gasohol containing more than 10% ethanol, premium gasoline, or white gas. Using these fuels can damage the engine's fuel system.

**Important** Do not use gasoline that is more than 30 days old.

**Danger**

**In certain conditions, gasoline is extremely flammable and highly explosive. A fire or explosion from gasoline can burn you and others and can damage property.**

- **Fill the fuel tank outdoors, in an open area, and when the engine is cold. Wipe up any gasoline that spills.**
- **Do not fill the fuel tank completely full. Add gasoline to the fuel tank until the level is 1/4 to 1/2 in. (6 to 13 mm) below the bottom of the filler neck. This empty space in the tank allows the gasoline to expand.**
- **Never smoke when handling gasoline, and stay away from an open flame or where a spark may ignite the gasoline fumes.**
- **Store gasoline in an approved fuel container and keep it out of the reach of children.**
- **Never buy more than a 30-day supply of gasoline.**

**Danger**

**When fueling, under certain circumstances, a static charge can develop, igniting the gasoline. A fire or explosion from gasoline can burn you and others and damage property.**

- **Always place gasoline containers on the ground and away from your vehicle before filling.**
- **Do not fill gasoline containers inside a vehicle or on a truck or trailer bed because interior carpets or plastic truck bed liners may insulate the container and slow the loss of any static charge.**
- **When practical, remove gasoline-powered equipment from the truck or trailer and refuel the equipment with its wheels on the ground.**
- **If this is not possible, then refuel such equipment on a truck or trailer from a portable container, not from a gasoline dispenser nozzle.**
- **If you must use a gasoline dispenser nozzle, keep the nozzle in contact with the rim of the fuel tank or container opening at all times until fueling is complete.**

Use a fuel stabilizer/conditioner regularly during operation and storage. A stabilizer/conditioner cleans the engine during operation and prevents gum-like varnish deposits from forming in the engine during periods of storage.

**Important** Do not use fuel additives other than a fuel stabilizer/conditioner. Do not use fuel stabilizers with an alcohol base such as ethanol, methanol, or isopropanol.

1. Clean around the fuel tank cap (Fig. 12).
2. Remove the fuel tank cap.
3. Fill the fuel tank with unleaded to within 1/4 to 1/2 inch (6 to 13 millimeters) from the top of the tank. **Do not fill into the filler neck.**

**Important** Do not fill the fuel tank more than 1/4 inch (6 millimeters) from the top of the tank because the gasoline must have room to expand.

4. Install the fuel tank cap and wipe up any spilled gasoline.

PROTOTYPE

## Checking the Tire Pressure

Check the pressure of the tires because they are overinflated at the factory for shipping. Reduce the pressure equally in both tires to between 12 and 15 psi (82 and 103 kPa).

## Reviewing the Maintenance Schedule

Review the Recommended Maintenance Schedule on page 18. You may need to perform one or more additional procedures before or soon after you begin operating the snowthrower.

# Operation

**Note:** Determine the left and right sides of the machine from the normal operating position.

## Operating Controls

- **Auger/Impeller Drive Control Lever** (Fig. 13)—To engage both the auger and impeller, press the lever against the right handgrip. To disengage, release the lever.

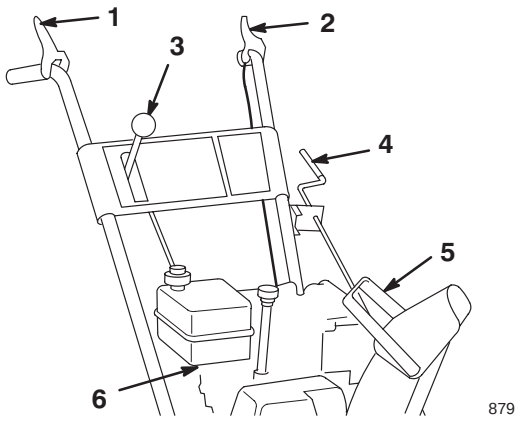


**Figure 13**

1. Auger/impeller drive control lever
2. Traction control lever
3. Speed selector
4. Discharge chute control
5. Chute deflector handle
6. Fuel shutoff valve

- **Traction Control Lever** (Fig. 13)—To engage the traction (wheel drive), press the lever against the left handgrip. To stop the traction, release the lever.
- **Speed Selector** (Fig. 13)—This control has 4 positions: 3 forward speeds and 1 reverse. To change speeds, move the speed selector to the desired position. The lever locks in a notch at each speed selection.

  **Note:** Before shifting gears into or out of reverse, you must release the traction control lever. You may shift between any of the **forward** speeds without releasing the traction control lever.
- **Discharge Chute Control** (Fig. 13)—Rotate the discharge chute control clockwise to move the discharge chute to the left; counterclockwise to move the chute to the right.
- **Chute Deflector Handle** (Fig. 13)—Move the deflector handle forward to move the snow stream down; move it rearward to move the snow stream up.
- **Fuel Shutoff Valve** (Fig. 13)—Close the valve by rotating clockwise. Open the valve by rotating it counterclockwise. Close the valve when you do not use the snowthrower.
- **Choke** (Fig. 14)—Move the choke to the (**Full**) position to start a cold engine. As engine warms up, gradually move the choke to the **Off** position.

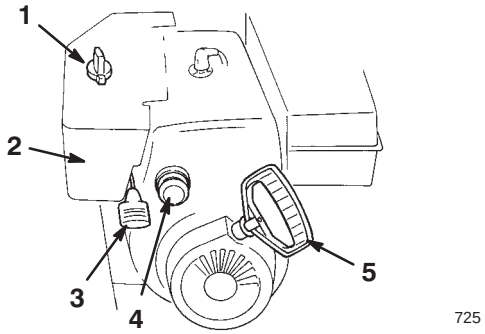


**Figure 14**

1. Choke
2. Ignition switch
3. Throttle
4. Primer
5. Recoil starter

- **Ignition Switch** (Fig. 14)—Insert the key before starting the engine. To stop the engine, remove the key.
- **Throttle** (Fig. 14)—Move the throttle upward to increase the engine speed; move it downward to decrease the engine speed. Move the throttle to the **Stop** position to stop the engine.
- **Primer** (Fig. 14)—Press the primer to pump a small amount of gasoline into the engine for improved cold-weather starting.
- **Recoil Starter** (Fig. 14)—The recoil starter is on the back side of the engine. Pull the recoil starter to start the engine.

PROTOTYPE

## Removing the Carburetor Heater Box

If you operate the engine when the air temperature is above 40°F (4°C), remove the carburetor heater box (Fig. 15).

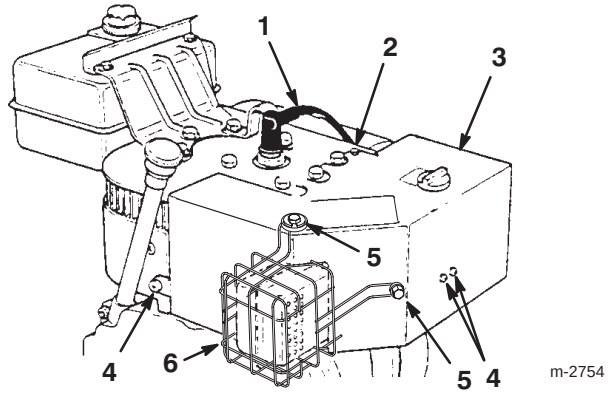


**Figure 15**

1. Spark-plug wire
2. Self-tapping screw
3. Carburetor heater box
4. Screws
5. Screws, lock washers, and washers
6. Muffler guard

**1.** Disconnect the wire from the spark plug and ensure that the wire does not contact the plug (Fig. 15).

**2.** Remove the key from the ignition switch (Fig. 14).

**3.** Pull the choke knob off (Fig. 14).

**4.** Remove the fasteners that secure the carburetor heater box in place (Fig. 15).

**Note:** Install these fasteners in their holes for safe keeping.

**5.** Lift the carburetor heater box up and away from the engine.

**6.** Disconnect the green ground wire clip under the throttle (Fig. 16).

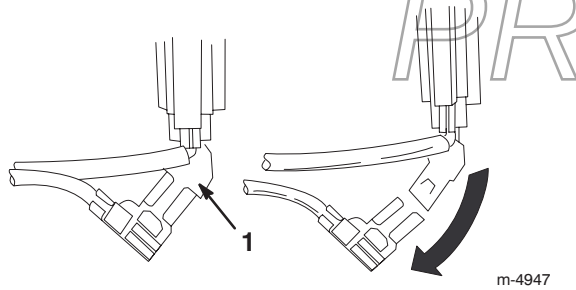


**Figure 16**

1. Green ground wire clip

**7.** Install the choke knob.

**8.** Insert the ignition key.

**9.** Connect the wire to the spark plug.

**Important** Use the carburetor heater box as a reference for the choke and throttle positions.

## Installing the Carburetor Heater Box

To install the carburetor heater box, reverse steps 1 through 9 of Removing the Carburetor Heater Box on page 15. Remove the fasteners from their holes before installing the carburetor heater box.

## Starting the Engine

**Important** Ensure that there are no obstructions in the auger/impeller and the discharge chute before you operate the snowthrower. **Use a stick, not your hand, to remove an obstruction from the auger/impeller or the discharge chute.**

**1.** Connect the wire to the spark plug.

**2.** Move the throttle to the **Fast** position (Fig. 14).

**3.** Release the auger/impeller drive control lever and the traction control lever (Fig. 13).

**4.** Open the fuel shutoff valve below the fuel tank (Fig. 17).

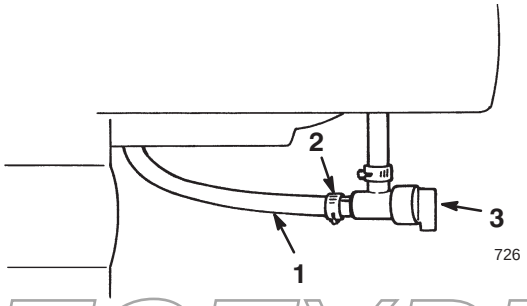


**Figure 17**

1. Fuel line
2. Hose clamp
3. Fuel shutoff valve

PROTOTYPE

**5.** Rotate the choke (Fig. 14) to the **On** position.

**6.** Insert the ignition key (Fig. 14).

**Important** Do not use the primer or the choke if the engine has been running and is hot. Excessive priming may flood the engine and prevent it from starting.

**7.** Cover the hole in the center of the primer (Fig. 14) with your thumb and slowly push in the primer 3 times, pausing a moment between pushes.

8. Grasp the recoil starter handle (Fig. 14) and pull it out slowly until positive engagement results; then pull the handle vigorously to start the engine.

9. Keep a firm grip on the starter handle and return the rope slowly.

**Note:** If engine does not start or if the air temperature is –10°F (–23°C) or below, the engine may need additional priming. After pushing in the primer, try to start the engine before priming again.

10. After the engine starts, immediately rotate the choke (Fig. 14) to the 3/4 position. As the engine warms up, rotate the choke to the 1/2 position. When the engine warms up sufficiently, rotate the choke to the **Off** position.

11. Move the speed selector (Fig. 13) to first gear, squeeze the traction control lever to the handgrip, and then release the traction control lever. If the snowthrower moves forward before engaging the traction drive control lever or after releasing the lever, see Adjusting the Traction Drive on page 21.

**Important** Do not operate the snowthrower if the auger and impeller rotate when you disengage the auger/impeller drive control lever.

## Stopping the Engine

1. Engage the auger to clear any remaining snow from inside the housing.
2. Run the engine for a few minutes to dry off any accumulated moisture.
3. Release the auger/impeller drive control lever and the traction control lever (Fig. 13).
4. Stop the engine by doing one of the following:
   A. Move the throttle to the Slow position, and remove the ignition key.
   B. Move the throttle to the **Stop** position.
5. Close the fuel shutoff valve (Fig. 17).
6. Pull the recoil starter with a rapid, continuous, full-arm stroke 3 or 4 times. This helps prevent the recoil starter from freezing up.
7. Wait for all moving parts to stop before leaving the operating position.

## Freewheeling or Self-propel Drive

You can operate the snowthrower with the self-propelling feature engaged or disengaged (freewheeling). When you insert the axle pins through the outer axle holes and not through the wheel hubs (Fig. 4), the snowthrower freewheels. When you insert the axle pins through the holes in the wheel hubs and the inner axle holes (Fig. 4) and engage the traction control lever, the snowthrower propels itself.

## Snowthrowing Tips

**Danger**

**When the snowthrower is in operation, the impeller and auger can be rotating and cut off or injure hands and feet.**

- **Before adjusting, cleaning, repairing and inspecting the snowthrower, and before unclogging the discharge chute, *stop the engine and wait for all moving parts to stop.* Disconnect the wire from the spark plug and keep it away from the plug to prevent someone from accidentally starting the engine.**
- **Use a stick, *not your hands*, to remove an obstruction from the discharge chute.**
- **Stay behind the handles and away from the discharge opening while operating the snowthrower.**
- **Keep face, hands, feet, and any other part of your body or clothing away from concealed, moving, or rotating parts.**

**Warning**

**The auger/impeller may pick up and throw stones, toys, and other foreign objects, causing serious personal injury to the operator or to bystanders.**

- **Keep the area to be cleared free of all objects that could be picked up and thrown by the auger/impeller.**
- **Keep all children and pets away from area of operation.**

PROTOTYPE

- Adjust the skids to match the type of surface being cleaned. Refer to Adjusting the Skids and the Scraper on page 19.
- In snowy and cold conditions, some controls and moving parts may freeze. **Do not use excessive force when trying to operate frozen controls.** If you have difficulty operating any control or part, start the engine and let it run for a few minutes.
- Remove snow as soon as possible after it falls. This produces the best snow removal results.
- Always use the **Fast** throttle position when throwing snow.
- Overlap each swath to ensure complete snow removal.

- Discharge the snow downwind whenever possible.
- Do not overload the snowthrower by clearing snow at too fast a rate. If the engine slows down, shift the snowthrower into a lower gear to reduce the forward speed.
- In wet or slushy conditions, maintain maximum engine speed, and do not overload the engine to prevent clogging the discharge chute.
- If the front of the snowthrower tends to ride up, reduce the forward speed by shifting the snowthrower into a lower gear. If the front still tends to ride up, lift up on both handgrips to hold down the front of snowthrower.
- If the wheels slip, shift the snowthrower into a lower gear to reduce the forward speed.
- After clearing the snow, let the engine run for a few minutes to prevent moving parts from freezing. Engage the auger/impeller to clear any remaining snow from inside the housing. Shut off the engine, wait for all moving parts to stop, and remove all ice and snow from the snowthrower.
- With the engine shut off, pull the recoil starter handle several times to prevent the recoil starter from freezing up.
- When you are not using the snowthrower, close the fuel shutoff valve and remove the key.

PROTOTYPE

# Maintenance

**Note:** Determine the left and right sides of the machine from the normal operating position.

## Recommended Maintenance Schedule

| Maintenance Service Interval | Maintenance Procedure |
|---|---|
| Initially | • Check the engine oil level.[1] Refer to Checking the Engine Oil Level on page 19.<br>• Adjust the skids and the scraper.[2] Refer to Adjusting the Skids and the Scraper on page 19.<br>• Adjust the speed selector.[3] Refer to Adjusting the Speed Selector on page 20. |
| 1 Hour | • Inspect and adjust the traction drive belt. Refer to Adjusting the Traction Drive Belt on page 21.<br>• Inspect and adjust the auger/impeller drive belt. Refer to Adjusting the Auger/Impeller Drive Belt on page 23. |
| 2 Hours | • Change the engine oil. Refer to Changing the Engine Oil on page 23. |
| 5 Hours | • Inspect and adjust or replace the traction drive belt if necessary. Refer to Adjusting the Traction Drive Belt on page 21 or to Replacing the Traction Drive Belt on page 21.<br>• Inspect and adjust or replace the auger/impeller drive belt if necessary. Refer to Adjusting the Auger/Impeller Drive Belt on page 23 or to Replacing the Auger/Impeller Drive Belt on page 23. |
| 15 Hours | • Oil and grease the internal moving parts. Refer to Lubricating the Snowthrower on page 24. |
| 25 Hours | • Change the engine oil. Refer to Changing the Engine Oil on page 23. |
| 100 Hours | • Inspect and gap the spark plug. Replace it if necessary. Refer to Replacing the Spark Plug on page 24. |
| Annually | • Change the engine oil at the end of the snowthrowing season. Refer to Changing the Engine Oil on page 23.<br>• Oil and grease the internal moving parts at the end of the snowthrowing season. Refer to Lubricating the Snowthrower on page 24.<br>• Drain the gasoline and run the engine to dry out the fuel tank and the carburetor at the end of the snowthrowing season. Refer to Emptying the Fuel Tank on page 24. |

PROTOTYPE

[1]Check the engine oil level **before each use** and add oil if necessary.

[2]Adjust the skids and the scraper as needed.

[3]Adjust the speed selector as needed.

**Important** Refer to your engine operator's manual for additional maintenance procedures.

**Caution**

**If you leave the wire on the spark plug, someone could accidently start the engine and seriously injure you or other bystanders.**

**Disconnect the wire from the spark plug before you do any maintenance. Set the wire aside so that it does not accidentally contact the spark plug.**

## Checking the Engine Oil Level

Every time you use the snowthrower, first ensure that the oil level is between the **Add** and the **Full** marks on the dipstick.

1. Stop the engine and wait for all moving parts to stop.
2. Move the snowthrower to a level surface to ensure an accurate oil level reading.
3. Clean around the dipstick (Fig. 12).
4. Remove the dipstick by rotating the cap counterclockwise and pulling it out (Fig. 12).
5. Wipe the dipstick clean with a clean cloth.
6. Install the dipstick into the filler neck, then remove it.

   **Note:** To ensure an accurate oil level reading, you must fully install the dipstick.
7. Read the oil level on the dipstick.
8. If the oil level is below the **Add** mark on the dipstick, **slowly** pour only enough oil into the filler hole to raise the oil level to the **Full** mark on the dipstick.

   **Note:** Use only a high-quality, SAE 5W–30 or SAE 10 weight detergent oil that has the American Petroleum Institute (API) service classification SF, SG, SH, or SJ. For extremely cold conditions (below 0°F or –18°C), use 0W–30 weight detergent oil that has the American Petroleum Institute (API) service classification SF, SG, SH, or SJ.

**Important** Do not overfill the crankcase with oil and run the engine; engine damage will result. Drain the excess oil until the oil level on the dipstick reads **Full**.

9. Insert the dipstick into the filler neck and rotate the cap clockwise until it is tight.

## Checking the Auger Gearbox Grease

The auger gearbox is packed with 5 oz. (140 g) of **Lubriplate MAG-1** (a low-temperature, high-pressure grease) and is sealed at the factory. The pipe plug (Fig. 18) is for factory use only; **you do not need to check or add grease.** If the gearbox is leaking grease, contact an Authorized Service Dealer.

PROTOTYPE

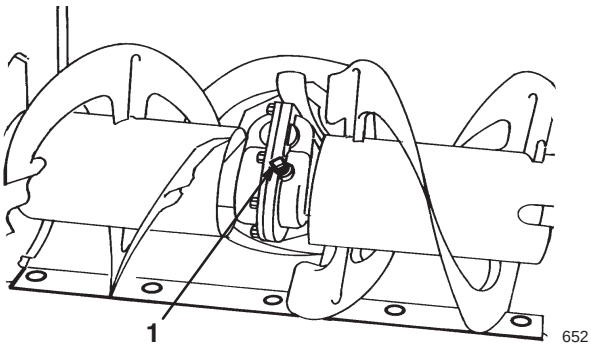


**Figure 18**

1. Pipe plug

## Adjusting the Skids and the Scraper

Adjust the skids and the scraper initially and then as needed to ensure that the auger does not contact the paved or gravel surface. Also, adjust them as needed to compensate for wear.

1. Stop the engine and wait for all moving parts to stop.
2. Move the snowthrower to a level surface.
3. Disconnect the wire from the spark plug and ensure that the wire does not contact the plug (Fig. 15).
4. Check the tire pressure in the tires. Refer to Checking the Tire Pressure on page 13.
5. Loosen the 4 flange nuts that secure both skids to the auger side plates (Fig. 19) until the skids slide up and down easily.

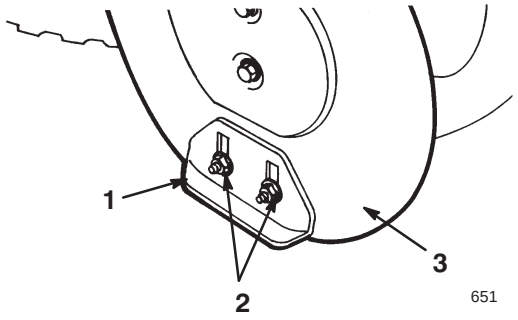


**Figure 19**

1. Skid (2)
2. Flange nuts (4)
3. Auger side plate (2)

**6.** Support the **auger blades** so that they are 1/8 inch (3 millimeters) off the ground (Fig. 20).

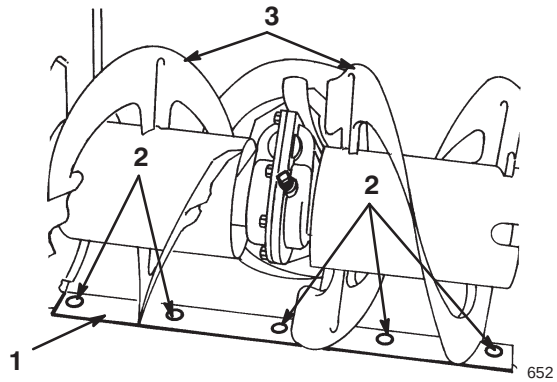


**Figure 20**

1. Scraper
2. Mounting screws
3. Auger blades

**7.** Check the scraper adjustment. The scraper should be 1/8 inch (3 millimeters) above and parallel to a level surface.

**For Concrete and Asphalt Surfaces:**

If the snowthrower does not clear the snow close enough to the pavement, adjust the skids to lower the scraper; if the pavement surfaces are cracked, rough, or uneven, adjust the skids to raise the scraper.

**For Gravel Surfaces:**

Support the auger blades a few inches (centimeters) above the ground, and adjust the skids to prevent the snowthrower from picking up rocks.

**8.** To adjust the scraper, loosen the 5 mounting screws (Fig. 20), level the scraper, and tighten the mounting screws.

**9.** Move the skids down as far as possible.

**10.** Tighten the 4 flange nuts that secure both skids to the auger side plates (Fig. 19).

**11.** Connect the wire to the spark plug.

## Adjusting the Speed Selector

Adjust the speed selector linkage initially and when the snowthrower is slow, first gear has no speed, or the speed selector does not move into third gear.

**1.** Stop the engine and wait for all moving parts to stop.

**2.** Disconnect the wire from the spark plug and ensure that the wire does not contact the spark plug (Fig. 15).

**3.** Tip the snowthrower forward and block it so that it cannot fall.

**4.** Remove the 4 flange-head bolts that secure the bottom cover to the frame and remove the cover (Fig. 25).

**5.** Loosen the flange nuts that secure the selector plate to the control panel (Fig. 21).

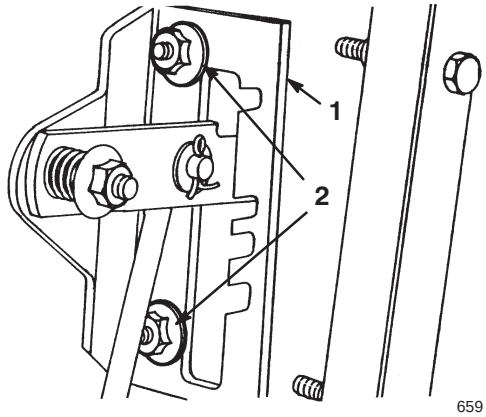


**Figure 21**

1. Speed selector plate
2. Flange nuts

PROTOTYPE

**6.** Shift the speed selector to third gear and push down on the speed selector plate to move the drive assembly to the right.

**Note:** The drive assembly should be 1/8 inch (3 millimeters) from the roll pin; if not, slide the selector plate (Fig. 21) until the gap is 1/8 inch (3 millimeters); refer to Figure 22.

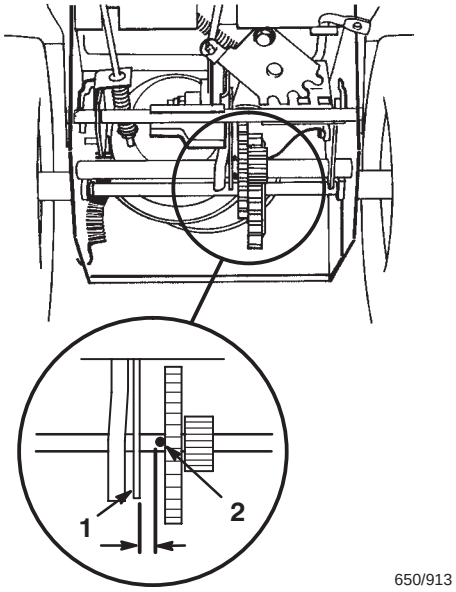


**Figure 22**

1. Roll pin
2. Drive assembly

**7.** With the drive assembly 1/8 inch (3 millimeters) from the roll pin, tighten the flange nuts that secure the speed selector plate.

**8.** Shift the speed selector to the **R** (**Reverse**) position and back to third gear to check the adjustment.

**9.** If the space between the roll pin and the drive assembly is more than 3/16 inch (5 millimeters), repeat steps 4 through 7.

**10.** Install the bottom cover and return the snowthrower to the upright position.

**11.** Connect the wire to the spark plug.

## Adjusting the Traction Drive Belt

Adjust the traction drive belt after the first operating hour, after every 5 operating hours thereafter, and when the speed selector shifts properly but the snowthrower does not drive in the forward or reverse speeds.

**1.** Stop the engine and wait for all moving parts to stop.

**2.** Disconnect the wire from the spark plug and ensure that the wire does not contact the spark plug (Fig. 15).

**3.** Check and adjust the traction drive as described in steps 4 through 7 of Installing the Traction Rod on page 10.

**4.** If the problem persists after adjusting the linkage, contact an Authorized Service Dealer.

**5.** Connect the wire to the spark plug.

## Replacing the Traction Drive Belt

If the traction drive belt becomes worn, oil-soaked, or otherwise damaged, replace the belt.

**1.** Stop the engine and wait for all moving parts to stop.

**2.** Disconnect the wire from the spark plug and ensure that the wire does not contact the spark plug (Fig. 15).

**3.** Drain the gasoline from the fuel tank. Refer to Emptying the Fuel Tank on page 24.

**4.** Remove the 2 flange-head bolts that hold the belt cover in place and set the cover aside (Fig. 23).

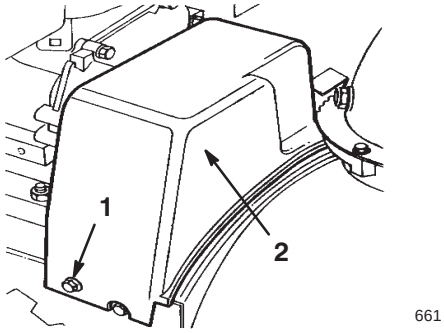


**Figure 23**

1. Flange-head bolt (2)
2. Belt cover

**5.** Loosen the belt guide (Fig. 24).

PROTOTYPE

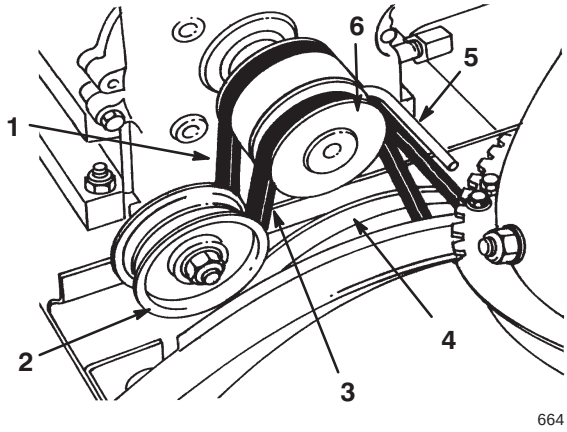


**Figure 24**

1. Traction drive belt
2. Idler pulley
3. Auger/impeller drive belt
4. Large auger/impeller pulley
5. Belt guide
6. Engine pulley

**6.** Remove the auger/impeller drive belt from the engine pulley and the large auger/impeller pulley (Fig. 24).

**7.** Tip the snowthrower forward and block it so that it cannot fall.

**8.** Remove the 4 flange-head bolts that secure the bottom cover to the frame and remove the cover (Fig. 25).

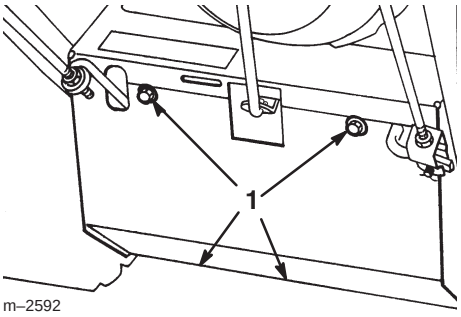


**Figure 25**

1. Flange-head bolts

**9.** Disconnect the spring from the notch in the bottom edge of the side plate (Fig. 26).

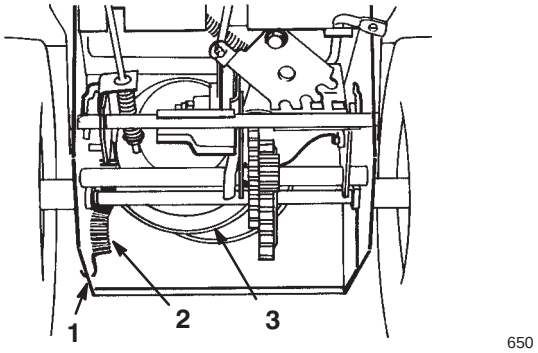


**Figure 26**

1. Notch in side plate
2. Spring
3. Large traction pulley

**Caution**

**The spring is under heavy tension and could injure the you or a bystander if you do not carefully remove it.**

**Carefully remove the spring.**

**10.** Set the snowthrower upright.

**11.** Remove the traction drive belt from the engine pulley and the large traction pulley (Fig. 24).

**12.** Install a new belt around the large traction pulley.

**13.** Loop the belt over the engine pulley, ensuring that the belt is on the inside of the belt guide (Fig. 24).

**14.** Tip the snowthrower forward and block it so that it cannot fall.

**15.** Hook the spring into the notch in the bottom edge of the side plate (Fig. 26).

**16.** Replace the bottom cover with the 4 flange-head bolts.

**17.** Set the snowthrower upright.

**18.** Install the auger/impeller drive belt around the large auger/impeller pulley and engine pulley, ensuring that the belt is on the inside of the idler pulley and the belt guide (Fig. 24).

**19.** Adjust the belt guide so that there is 1/8 inch (3 millimeters) of clearance between the auger/impeller drive belt and the guide, and secure the belt guide when the auger/impeller drive belt is tight.

**20.** Check the auger/impeller drive linkage and adjust it if necessary. Refer to steps 4 through 7 of Installing the Auger/Impeller Drive Control Linkage on page 10.

**21.** Install the belt cover.

**22.** Connect the wire to the spark plug.

PROTOTYPE

## Adjusting the Auger/Impeller Drive Belt

Operating the snowthrower with an auger/impeller drive belt that slips decreases the snowthrowing performance and damages the belt. Check the auger/impeller drive belt for the proper tension after the first operating hour, after every 5 operating hours thereafter. Adjust the belt when necessary.

**Danger**

**Improperly adjusting the auger/impeller may cause it to turn when disengaged. A rotating auger or impeller can cut off or injure fingers, hands, or feet.**

- **Keep your face, hands, feet, and any other part of your body or clothing away from concealed, moving, or rotating parts.**
- **Ensure that the impeller brake arm clearance is maintained.**
- **Do not adjust the auger/impeller drive belt too tight because it may cause the auger/impeller to turn when the control lever is in the *Disengaged* position. If this occurs, decrease the belt tension.**

1. Stop the engine and wait for all moving parts to stop.
2. Disconnect the wire from the spark plug and ensure that the wire does not contact the plug (Fig. 15).
3. Check and adjust the belt as instructed in steps 4 through 7 of Installing the Auger/Impeller Drive Control Linkage on page 10.
4. Connect the wire to the spark plug.
5. Check the belt tension by operating the auger.
6. If the belt still slips, replace it. Refer to Replacing the Auger/Impeller Drive Belt on page 23.

**Important** Do not operate the snowthrower if the auger and the impeller rotate when you disengage the auger/impeller drive control lever.

## Replacing the Auger/Impeller Drive Belt

If the auger/impeller drive belt becomes worn, oil-soaked, or otherwise damaged, replace the belt.

1. Stop the engine and wait for all moving parts to stop.
2. Disconnect the wire from the spark plug and ensure that the wire does not contact the plug (Fig. 15).
3. Remove the 2 flange-head bolts that hold the belt cover in place and set the cover aside (Fig. 23).
4. Loosen the belt guide (Fig. 24).
5. Remove the auger/impeller drive belt from the engine pulley and the large auger/impeller pulley (Fig. 24).
6. Install a new belt around the large auger/impeller pulley (Fig. 24).
7. Loop the belt over the engine pulley, ensuring that the belt is on the inside of the idler pulley and the belt guide (Fig. 24).
8. Adjust the belt guide so that there is 1/8 inch (3 millimeters) of clearance between the auger/impeller drive belt and the guide, and secure the belt guide.
9. Check and adjust the auger/impeller drive belt as instructed in steps 4 through 7 of Installing the Auger/Impeller Drive Control Linkage on page 10.
10. Install the belt cover.
11. Connect the wire to the spark plug.

**Important** Do not operate the snowthrower if the auger and the impeller rotate when you disengage the auger/impeller drive control lever.

## Changing the Engine Oil

Change the engine oil after the first 2 operating hours, after every 25 operating hours, and at the end of the snowthrowing season. If possible, run the engine just before changing the oil because warm oil flows better and carries more contaminants.

1. Stop the engine and wait for all moving parts to stop.
2. Disconnect the wire from the spark plug and ensure that the wire does not contact the spark plug (Fig. 15).
3. Block up the rear of the snowthrower.
4. Remove the left wheel.
5. Clean the area around the oil drain plug (Fig. 27).

PROTOTYPE

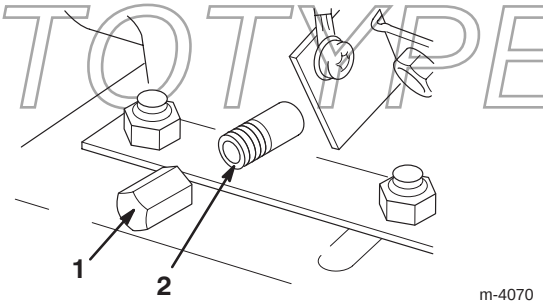


**Figure 27**

1. Oil drain plug
2. Drain extension

6. Slide an oil drain pan below the drain extension and remove the oil drain plug (Fig. 27).

**Note:** Place a funnel under the drain extension so the oil drains directly into the oil drain pan and away from the snowthrower.

7. Drain the oil.
8. Install the oil drain plug.
9. Install the left wheel.
10. Fill the crankcase with oil. Refer to Filling the Engine Crankcase with Oil on page 12.
11. Wipe up any spilled oil.
12. Connect the wire to the spark plug.

## Lubricating the Snowthrower

Lightly lubricate all moving parts of the snowthrower after every 15 operating hours and at the end of the snowthrowing season.

**Important** Do not get oil or grease on the rubber wheel or friction drive plate because the wheel will slip and the rubber may deteriorate.

1. Stop the engine and wait for all moving parts to stop.
2. Disconnect the wire from the spark plug and ensure that the wire does not contact the plug (Fig. 15).
3. Drain gasoline from the fuel tank. Refer to Emptying the Fuel Tank on page 24.
4. Tip the snowthrower forward onto the auger/impeller housing and block it so that it cannot fall.
5. Remove the 4 flange-head bolts that secure the bottom cover and remove the cover (Fig. 25).
6. Lightly lubricate the snowthrower with light oil as shown in Figure 28.

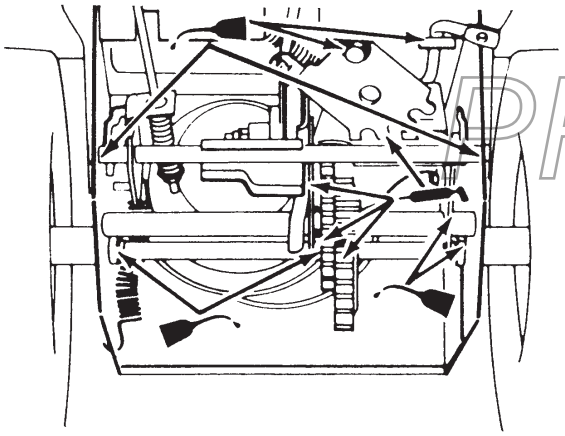

887

**Figure 28**

**Important** Do not excessively oil the snowthrower; extra oil may enter the traction drive and cause the traction drive belt to slip.

7. Wipe up any excess oil.
8. Grease the snowthrower as shown in Figure 28.
9. Wipe up any excess grease.
10. Install the bottom cover.
11. Return the snowthrower to its upright position.
12. Connect the wire to the spark plug.

## Replacing the Spark Plug

Use a **Champion RJ-19LM** or equivalent spark plug. Install a new plug after every 100 operating hours.

1. Stop the engine and wait for all moving parts to stop.
2. Clean any debris from around the base of the spark plug.
3. Disconnect the wire from the spark plug (Fig. 15).
4. Remove the spark plug.
5. Examine the spark plug and replace it if it is cracked, fouled, dirty, or if the electrodes are worn.

**Important** Do not clean the electrodes because grit could enter the cylinder and damage the engine.

6. Set the gap between the electrodes on the spark plug at 0.030 in. (0.76 mm) as shown in Figure 29.

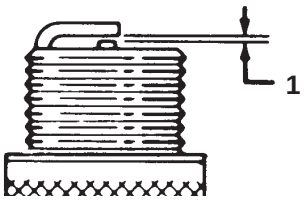


110

**Figure 29**

1. 0.030 in. (0.76 mm)

PROTOTYPE

7. Install the spark plug by hand and then torque it to 15 ft.-lb. (20.4 N·m). If you do not have a torque wrench, tighten the plug firmly.
8. Connect the wire to the spark plug.

## Emptying the Fuel Tank

1. Stop the engine and wait for all moving parts to stop.
2. Disconnect the wire from the spark plug (Fig. 15).
3. Close the fuel shutoff valve (Fig. 17).

**Danger**

**Gasoline is highly flammable; it can ignite and cause serious personal injury.**

- **Drain gasoline outdoors.**
- **Drain gasoline from a cold engine only.**
- **Wipe up any gasoline that may have spilled.**
- **Do not drain gasoline near any open flame or where gasoline fumes may be ignited by a spark.**
- ***Do not smoke* a cigar, a cigarette, or a pipe when handling gasoline.**

4. Place a clean drain pan under the fuel shutoff valve.
5. Loosen the hose clamp that secures the fuel line to the valve and slide the fuel line off the fuel shutoff valve (Fig. 17).
6. Open the fuel shutoff valve and allow the fuel to drain out of the fuel tank into the drain pan.
7. Install the fuel line onto the fuel shutoff valve and secure it with a hose clamp.
8. Connect the wire to the spark plug.
9. Start the snowthrower and run the engine until it stops. Repeat this step 2 more times to ensure that the fuel tank and the carburetor are empty.

# Storage

**Warning**

**Gasoline fumes are highly flammable, explosive, and dangerous if inhaled. If the product is stored in an area with an open flame, the gasoline fumes may ignite and cause an explosion.**

**Do not store the snowthrower in a house (living area), basement, or any other area where ignition sources may be present, such as hot water and space heaters, clothes dryers, furnaces, and other like appliances.**

## Preparing the Fuel System

1. Add stabilizer/conditioner to the fuel in the fuel tank as directed.
2. Run the engine for 10 minutes to distribute conditioned fuel through the fuel system.
3. Stop the engine, allow it to cool, and drain the fuel tank or run the engine until it stops. Refer to Emptying the Fuel Tank on page 24.
4. Start the engine and run it until it stops.
5. Choke or prime the engine, start it a third time, and run the engine until it will not start.
6. Dispose of unused fuel properly. Recycle it according to local codes, or use it in your automobile.

**Note:** Do not store stabilized gasoline for more than 90 days.

## Preparing the Engine

1. While the engine is still warm, change the engine oil. Refer to Changing the Engine Oil on page 23.
2. Remove the spark plug.
3. Use an oil can to squirt 2 teaspoons of oil into the spark plug hole.
4. Install the spark plug by hand and then torque it to 15 ft.-lb. (20.4 N·m). If you do not have a torque wrench, tighten the plug firmly. **Do not connect the wire to the plug.**
5. Pull the recoil starter slowly to distribute the oil on the inside of the cylinder.

## Preparing the Snowthrower

1. Lubricate the snowthrower. Refer to Lubricating the Snowthrower on page 24.
2. Clean the snowthrower.
3. Touch up chipped surfaces with paint available from an Authorized Service Dealer. Sand affected areas before painting, and use a rust preventative to prevent the metal parts from rusting.
4. Tighten any loose fasteners. Repair or replace any damaged parts.
5. Cover the snowthrower and store it in a clean, dry place out of the reach of children. Allow the engine to cool before storing it in any enclosure.

PROTOTYPE

# Troubleshooting

Toro designed and built your snowthrower for trouble-free operation. Check the following components and items carefully, and refer to Maintenance on page 18 for more information. If a problem continues, see an Authorized Service Dealer.

| Problem | Possible Causes | Corrective Action |
|---|---|---|
| Electric starter does not turn (electric-start models only) | 1. The power cord is disconnected at the outlet or the snowthrower. | 1. Connect the power cord to the outlet and/or the snowthrower. |
| | 2. The power cord is worn, corroded, or damaged. | 2. Replace the power cord. |
| | 3. The power outlet is not energized. | 3. Have a qualified electrician energize the power outlet. |
| Engine does not start or starts hard | 1. The key is not in the ignition or is in the **Off** position. | 1. Insert the key into the ignition and turn it to the **On** position. |
| | 2. The choke is in the **Off** position and the primer has not been pressed. | 2. Move the choke to the **On** position and press the primer 3 times. |
| | 3. The fuel shutoff valve is not open. | 3. Open the fuel shutoff valve. |
| | 4. The throttle is not in the **Fast** position. | 4. Move the throttle to the **Fast** position. |
| | 5. The fuel tank is empty or the fuel system contains stale fuel. | 5. Drain and/or fill the fuel tank with fresh gasoline (not more than 30 days old). If the problem persists, contact your Authorized Service Dealer. |
| | 6. The spark plug wire is loose or disconnected. | 6. Connect the wire to the spark plug. |
| | 7. The spark plug is pitted, fouled, or the gap is incorrect. | 7. Check the spark plug and adjust the gap if necessary. Replace the spark plug if it is pitted, fouled, or cracked. |
| | 8. The fuel cap vent is restricted. | 8. Remove the vent restriction or replace the fuel cap. |
| | 9. The engine oil level in the engine crankcase is too low or too high. | 9. Add or drain oil to adjust the oil level in engine crankcase to the **Full** mark on the dipstick. |
| | 10. The air temperature is above 40°F (4°C) and the carburetor heater box is on the snowthrower. | 10. Remove the carburetor heater box. |
| Engine runs rough | 1. The choke is in the **On** position. | 1. Move the choke to the **Off** position. |
| | 2. The fuel shutoff valve is not completely open. | 2. Open the fuel shutoff valve. |

PROTOTYPE

| Problem | Possible Causes | Corrective Action |
|---|---|---|
| | 3. The fuel tank is nearly empty or contains stale fuel. | 3. Drain and fill the fuel tank with fresh gasoline (not more than 30 days old). If the problem persists, contact an Authorized Service Dealer. |
| | 4. The spark plug wire is loose. | 4. Connect the wire to the spark plug. |
| | 5. The spark plug is pitted, fouled, or the gap is incorrect. | 5. Check the spark plug and adjust the gap if necessary. Replace the spark plug if it is pitted, fouled, or cracked. |
| | 6. The engine oil level in the engine crankcase is too low or too high. | 6. Add or drain the oil level in the engine crankcase to the **Full** mark on the dipstick. |
| | 7. The air temperature is above 40°F (4°C) and the carburetor heater box is on the snowthrower. | 7. Remove the carburetor heater box. |
| Engine runs, but the snowthrower discharges snow poorly or not at all | 1. The throttle is not in the **Fast** position when throwing snow. | 1. Move the throttle to the **Fast** position. |
| | 2. The snowthrower is moving too fast to clear the snow. | 2. Shift the snowthrower into a lower gear. |
| | 3. You are trying to remove too much snow per swath. | 3. Reduce the amount of snow removed for per swath. |
| | 4. You are trying to remove extremely heavy or wet snow. | 4. Don’t overload the snowthrower with extremely heavy or wet snow. |
| | 5. The discharge chute is plugged. | 5. Stop the engine, wait for all moving parts to stop, and use a stick to remove the snow from the discharge chute. |
| | 6. The auger/impeller drive belt is loose or is off the pulley. | 6. Install and/or adjust the auger/impeller drive belt. |
| | 7. The auger/impeller drive belt is worn or broken. | 7. Replace the auger/impeller drive belt. |
| Snowthrower does not properly clear the snow off the surface | 1. The tire pressure is low. | 1. Check the pressure in the tires and adjust it if necessary. |
| | 2. The skids and/or the scraper is not properly adjusted. | 2. Adjust the skids and the scraper. |

PROTOTYPE




PROTOTYPE