1980

FORM NO. 3311-583

TORO®

MODEL NO. 21738-0000001 & UP

PARTS CATALOG

21" SELF PROPELLED KEY-LECTRIC® SIDE DISCHARGE

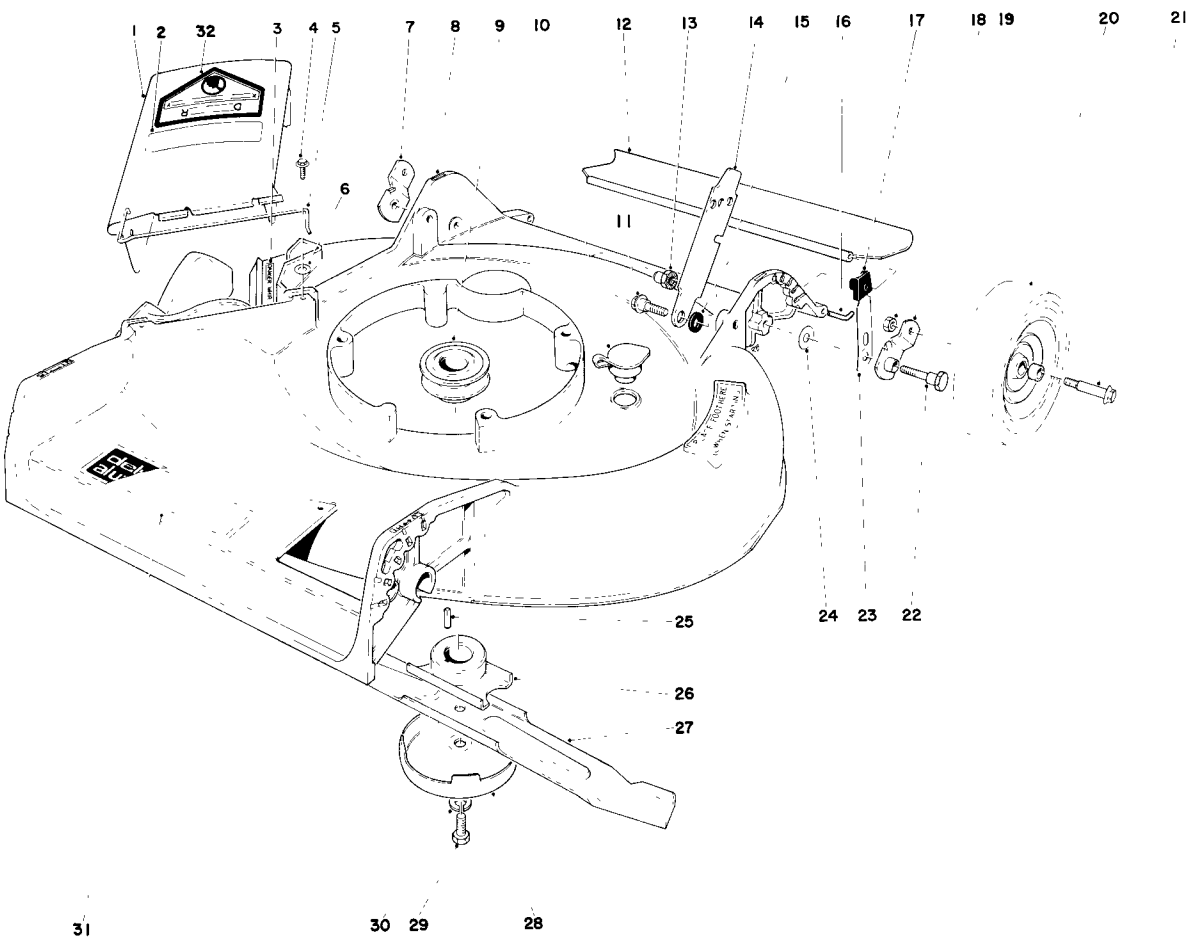

HOUSING ASSEMBLY

Ref. No.	Part No.	Description	No. Used
1	27-7810	Deflector Cover Assembly (Incl. Ref. #2, 5 & 32)	1
2	39-5760	Decal – Caution	1
3	22-7350	Decal – Danger	1
4	12-3270	Screw Special	2
5	20-2640	Hinge Spring	1
6	3256-1	Washer	2
7	20-2130	Pivot Arm "B"	1
8	8-0649	Housing	1
9	21-5580	Pulley Driver	1
10	6-4500	Plug Washout	1
11	5-2490	Shoulder Screw	2
12	22-4950	Rear Safety Shield	1
13	12-2080	Nut – Handle Pivot	2
14	5-2446	Handle Latch	2
15	3-3287	Spacer – Handle Latch	2
16	33-3201	Rod Shield	1
17	25-7740	Knob Arm	2
18	32146-6	Locknut	2
19	20-2140	Pivot Arm "A"	1
20	27-6200	Wheel & Tire Assy. (Incl. Ref. #33)	2
21	27-6230	Wheel Bolt	2
22	3-0655	Pivot Screw	2
23	25-8000	Spring Arm	2
24	5-4460	Pivot Washer	2
25	27-6300	Square Key	1
26	20-2750	Blade Retainer	1
27	20-2720	Blade	1
28	8-4240	Cup Anti Scalp	1

COPYRIGHT © ALL RIGHTS RESERVED

The Toro Company – 1979
MINNEAPOLIS, MN 55420 – U.S.A.

PRICE $1.00

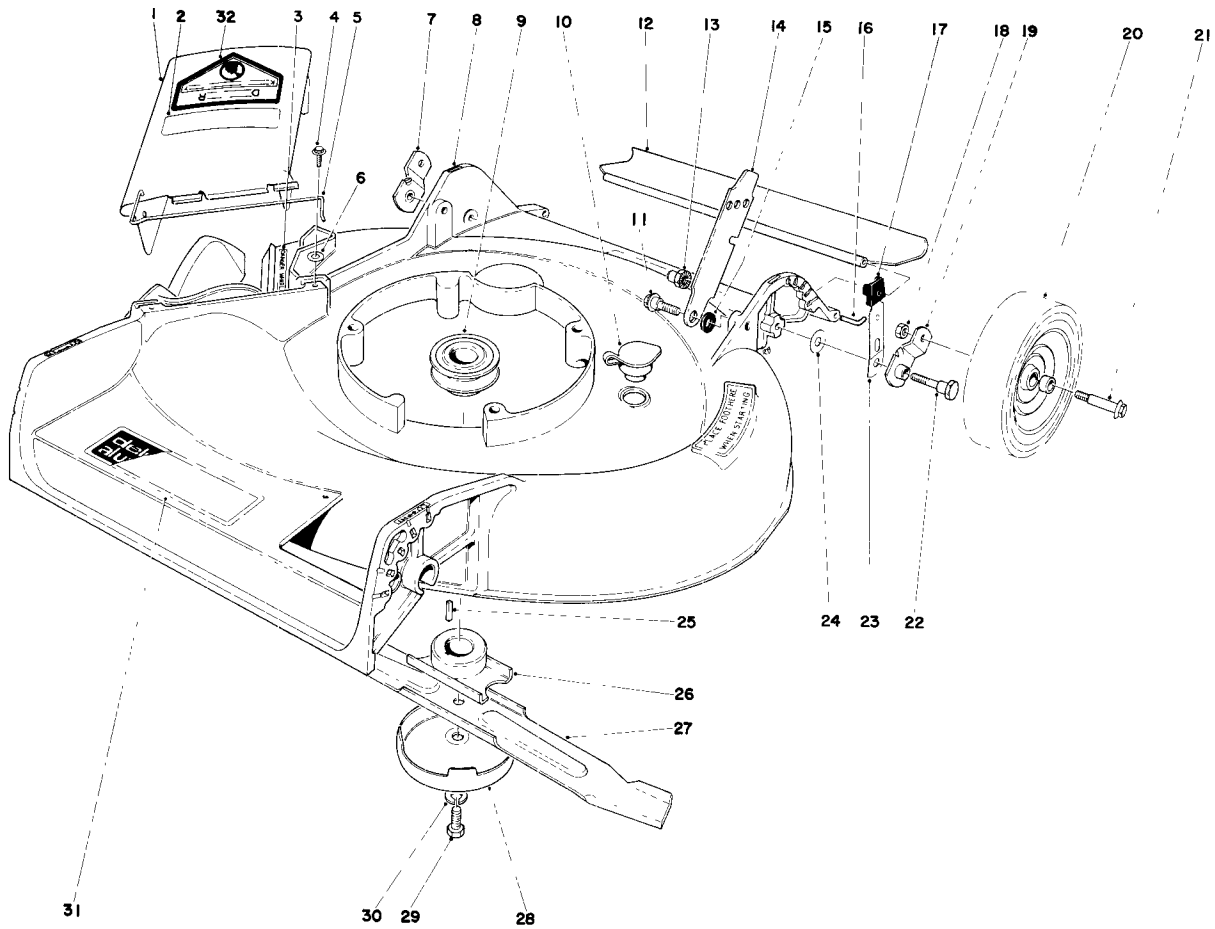

HOUSING ASSEMBLY (Continued)

Ref. No.	Part No.	Description	No. Used
29	3-5246	Screw Special	1
30	3253-22	Lockwasher	1
31	40-2210	Decal – Deck	1

Ref. No.	Part No.	Description	No. Used
32	39-5770	Decal – Danger	1
*	8-0269	Loose Parts	1
*	25-9150	Decal Serial Replacement	1

*Not Illustrated

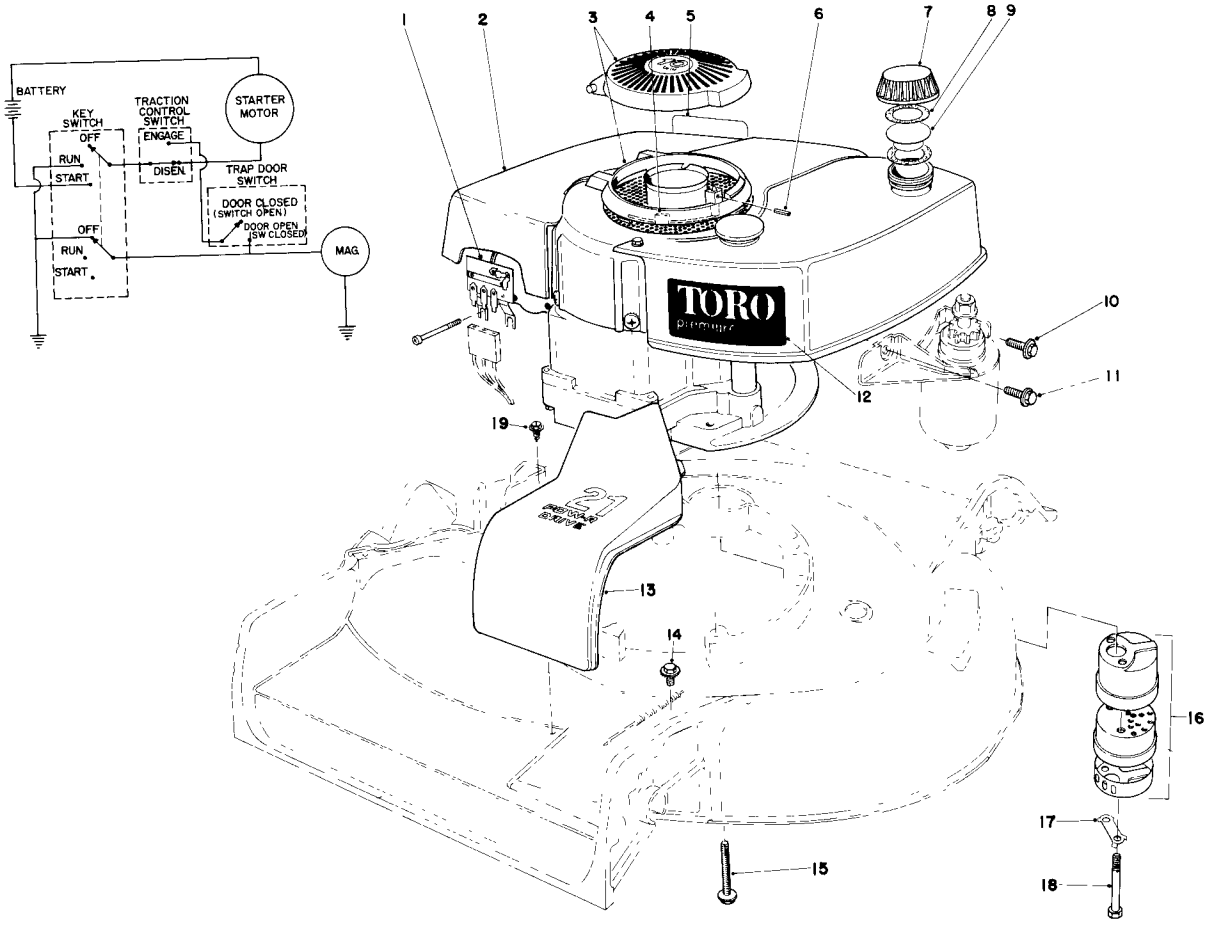

ENGINE ASSEMBLY

Ref. No.	Part No.	Description	No. Used
1	24-9770	Switch & Junction Box	1
2	221-616	Engine	1
3	37-1580	Decal – Maintenance	1
4	38-3080	Cover Assembly	1
5	25-1570	Clip Wire	2
6	32121-90	Spring Pin	1
7	27-7870	Gas Cap (Incl. Ref. #8 & 9)	1
8	2210-144	Gasket	1
9	2210-143	Baffle	1
10	12-3270	Screw Special	1

Ref. No.	Part No.	Description	No. Used
11	11-9760	Screw Special	1
12	40-2570	Decal Engine	1
13	28-4730	Cover Belt Drive	1
14	32144-11	Screw Hex Hd.	1
15	11-0580	Screw	3
16	5-4769	Muffler Assy. (Incl. Ref.#17&18)	1
17	3-5094	Locking Clip	1
18	321-20	Screw Hex Hd.	2
19	12-5450	Screw Special	2
*	33-2930	Starter Rope	1

*Not Illustrated

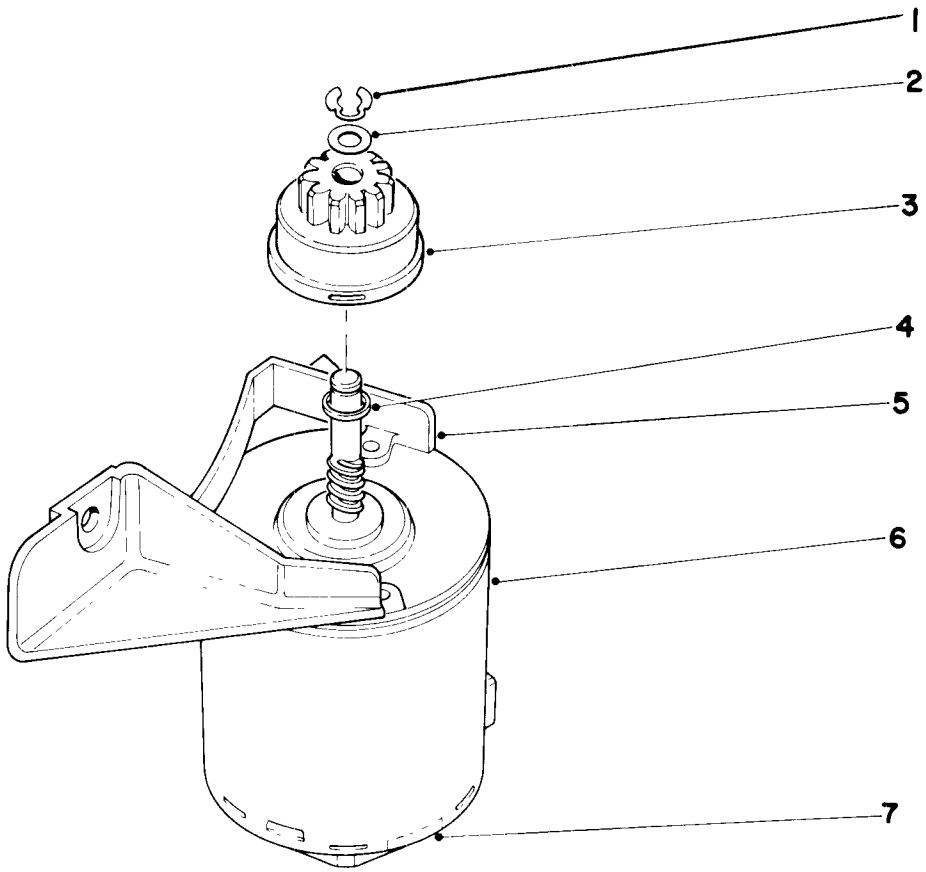

STARTER MOTOR

Ref. No.	Part No.	Description	No. Used
1	32151-47	Retaining Ring	1
2	25-3970	Washer	1
3	25-3960	Pinion Assembly	1
4	23-9590	Spacer	1

Ref. No.	Part No.	Description	No. Used
5	218-472	Mounting Bracket	1
6	25-3950	Starter Motor	1
7	218-494	End Plate	1
*	25-3940	Starter Motor Assembly (Incl. Ref. 1-7)	1

*Not Illustrated

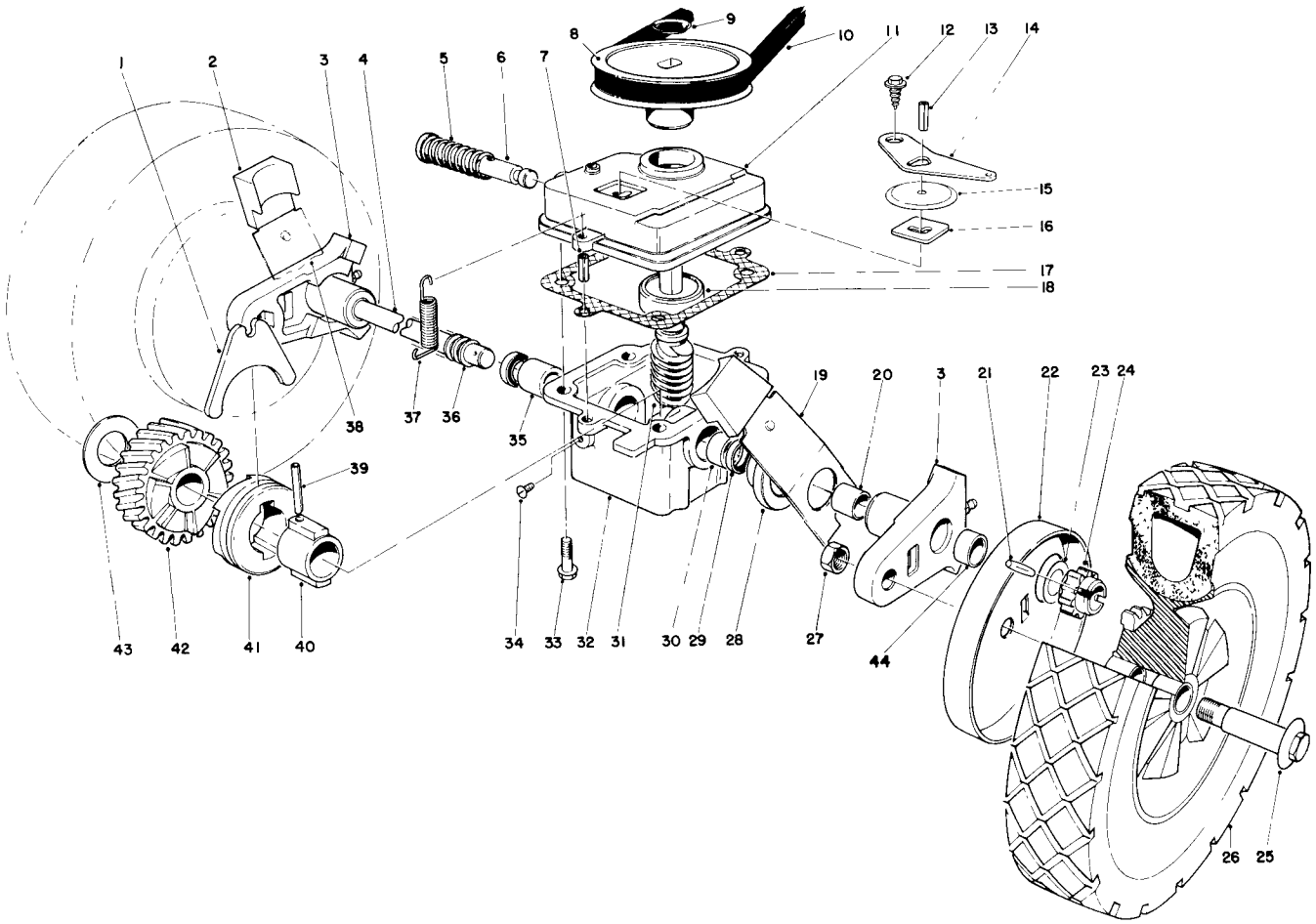

GEAR CASE ASSEMBLY

Ref. No.	Part No.	Description	No. Used
1	5-3247	Shifter Fork	1
2	25-7740	Knob Arm	2
3	38-2220	Pivot Arm (Incl. Ref. #20 & 44)	2
4	37-9440	Drive Shaft	1
5	3-0731	Spring	1
6	5-3248	Shifter Rod	1
7	32121-1	Roll Pin	2
8	20-2780	Pulley	1
9	3290-346	Push On Retainer	1
10	5-4505	V-Belt	1
11	39-1100	Cover Gear Case	1
12	32140-64	Self Tapping Screw	1
13	32121-23	Roll Pin	1
14	5-3252	Shifter Arm	1
15	3-2615	Transmission Dust Cover	1
16	3-0681	Latch Plate	1
17	36-1000	Gasket Gear Case	1
18	251-284	Ball Bearing	1
19	25-7930	Spring Arm L.H.	1
20	256-206	Bushing	2
21	32121-98	Spiral Pin	2
22	18-9820	Wheel Cover	2
23	18-9810	Thrust Washer	2
24	18-9690	Gear Pinion	2

Ref. No.	Part No.	Description	No. Used
25	27-6230	Wheel Bolt	2
26	36-7790	Wheel & Tire Assembly	2
27	32146-6	Locknut	2
28	3-2646	End Cap	2
29	253-140	Oil Seal	2
30	256-110	Bushing	1
31	8-5679	Worm Shaft & Gear (Incl. Ref. #42)	1
32	8-0479	Gear Case (Incl. Ref. #29-30 & 35)	1
33	11-9760	Screw	4
34	28-1550	Screw Nylon	1
35	256-263	Bushing	1
36	24-7920	Cover Drive Shaft	1
37	17-4490	Spring Belt Tension	1
38	25-7920	Spring Arm R.H.	1
39	32121-88	Coil Pin	1
40	3-0721	Sleeve	1
41	19-5660	Clutch Jaw	1
42		Helical Gear	1
43	3-0724	Thrust Washer	1
44	256-1	Bushing	2
*	33-2154	Gear Assembly Complete	1

*Not Illustrated

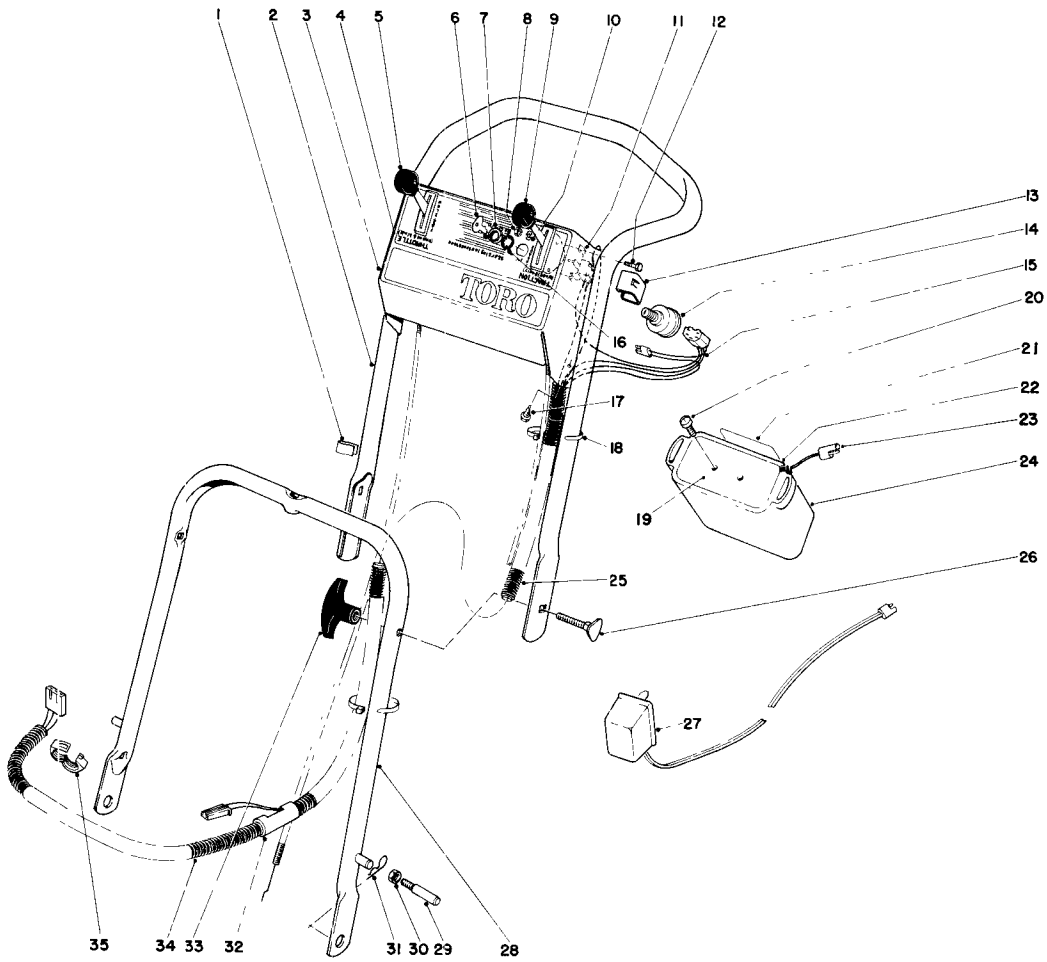

HANDLE ASSEMBLY

Ref. No.	Part No.	Description	No. Used
1	218-466	Clip	1
2	26-0540	Upper Handle	1
3	21-5160	Control Plate	1
4	26-2220	Decal Control Plate	1
5	33-2546	Throttle Control	1
6	218-412	Key	2
7	218-461	Nut	1
8	3296-9	Nut	2
9	33-2552	Traction Control	1
10	3256-21	Washer	2
11	24-9760	Safety Switch	1
12	3290-124	Screw	2
13	25-1590	Cover Switch	1
14	23-0660	Starter Switch	1
15	25-0090	Wiring Harness	1
16	3254-5	Lockwasher	1
17	32104-76	Screw	4
18	3290-378	Cable Tie	2

Ref. No.	Part No.	Description	No. Used
19	39-0630	Cover	1
20	32104-29	Self Tapping Screw	2
21	36-5380	Decal	1
22	38-4180	Battery Assembly (Incl. Ref. #19-21 & 23-24)	1
23	11-3790	Plug & Wire Assembly	1
24	39-0640	Container Battery	1
25	25-5650	Cover-Wiring Harness Upper	1
26	17-9420	Handle Screw	2
27	6-9780	Battery Charger	1
28	38-2620	Lower Handle	1
29	17-9380	Handle Pin	2
30	32146-8	Locknut	2
31	3290-255	Hair Pin Cotter	2
32	2412-49	Breakout Fitting	1
33	19-4050	Handle Knob	2
34	25-5660	Cover-Wiring Harness Lower	1
35	2412-48	Ring Fitting	1

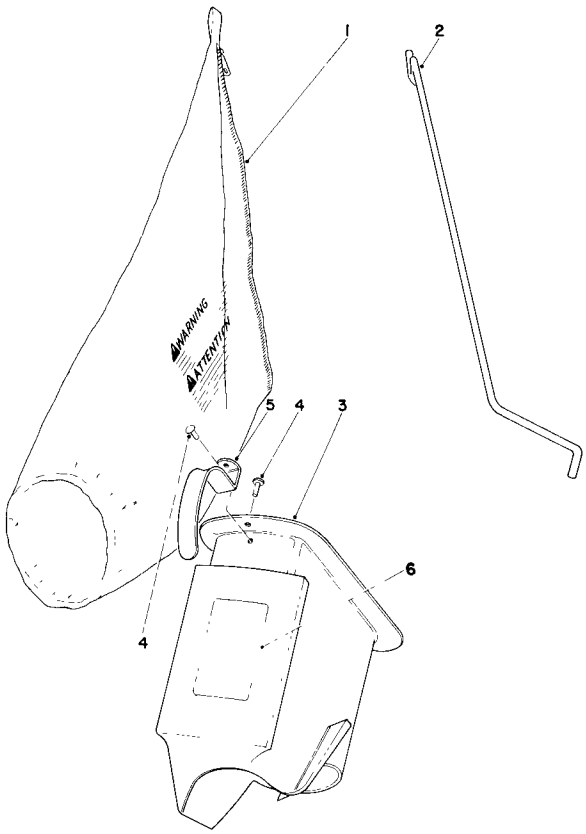

BAGGING KIT NO. 36-8380 (Optional)

Ref. No.	Part No.	Description	No. Used
1	6-0929	Grass Bag	1
2	20-4590	Bag Rod	1
3	6-1089	Grass Chute (Incl. Ref. #4 & 5)	1

Ref. No.	Part No.	Description	No. Used
4	3295-26	Rivet	2
5	20-4650	Handle Chute	1
6	36-5230	Bag Chute Decal	1

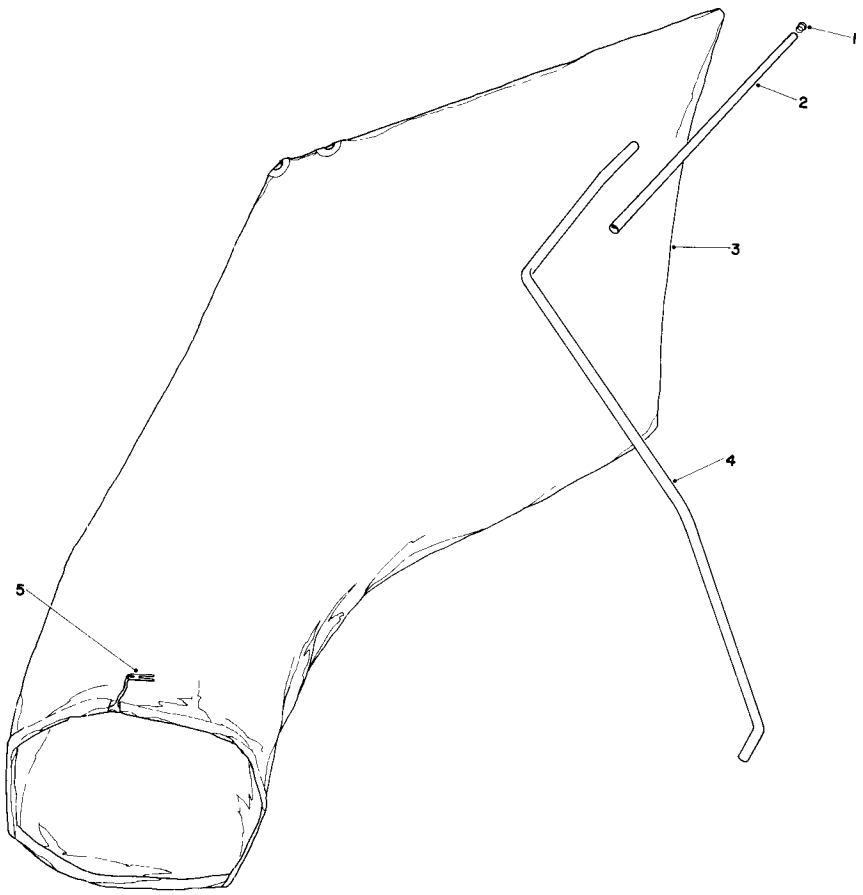

GIANT BAGGING KIT NO. 29-9750 (Optional)

Ref. No.	Part No.	Description	No. Used
1	2410-29	Cap	1
2	29-7000	Tube 25"	1
*	11-0650	Tube 28"	1

*Not Illustrated

Ref. No.	Part No.	Description	No. Used
3	8-4719	Bag (Incl. Ref. #5)	1
4	22-4820	Hanger Rod	1
5	3-2781	Bag Cord Fasteners	1

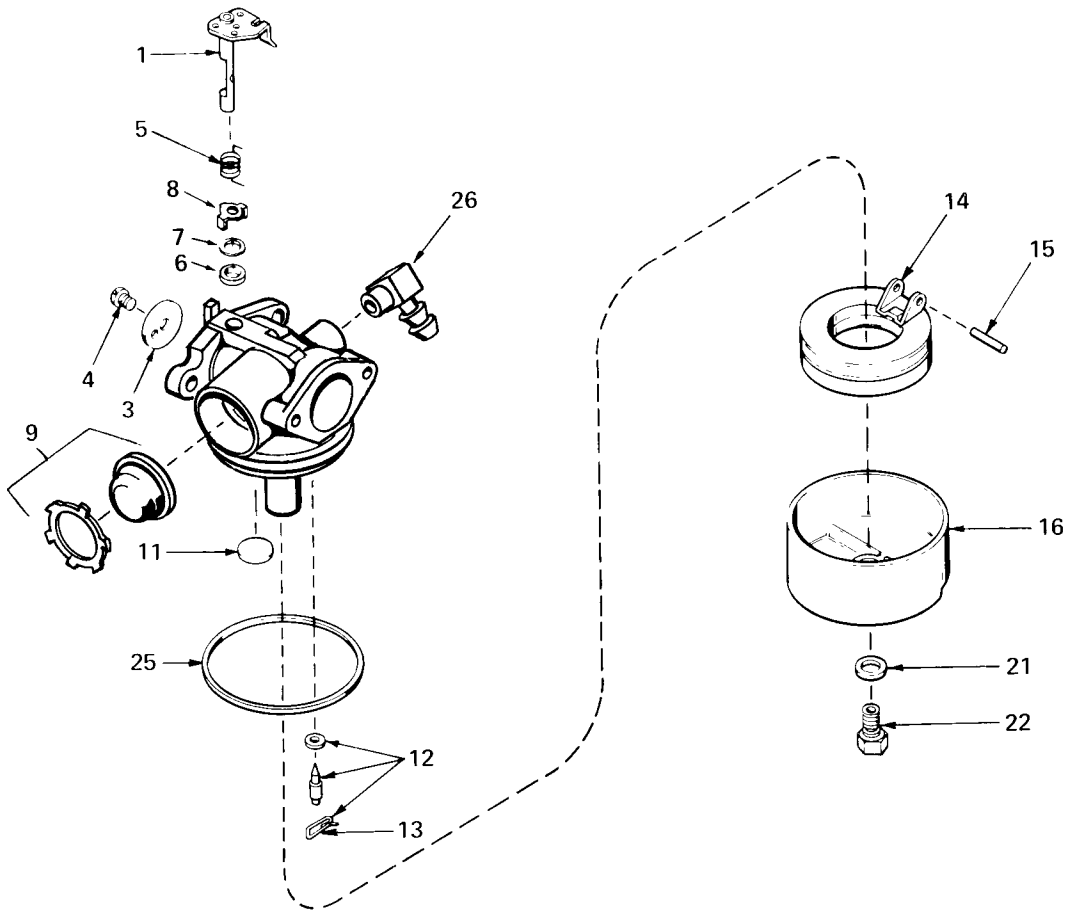

CARBURETOR NO. 632050

Ref. No.	Part No.	Description	No. Used
1	631615	Shaft & Lever Assy., Throttle	1
3	631616	Shutter, Throttle	1
4	650506	Screw, Throttle Shutter	1
5	632016	Spring, Return	1
6	631971	Seal, Dust	1
7	631184	Washer	1
8	631972	Retainer, Dust Seal	1
9	632047	Bulb & Retainer, Primer	1
11	631027	Plug, Welch	1

Ref. No.	Part No.	Description	No. Used
12	631021	Inlet Needle, Seat & Clip Assy. (Incl. Ref. # 13)	1
13	631022	Clip, Inlet Needle	1
14	632019	Float, Carburetor	1
15	631024	Shaft, Float	1
16	631700	Bowl, Float	1
21	631334	Gasket, Bowl-to-Body	1
22	631935	Nut, Float Bowl	1
25	631028	Gasket, Bowl-to-Body	1
26	631807	Fitting, Fuel Inlet	1

ENGINE TECUMSEH MODEL NO. TNT 100-10056C

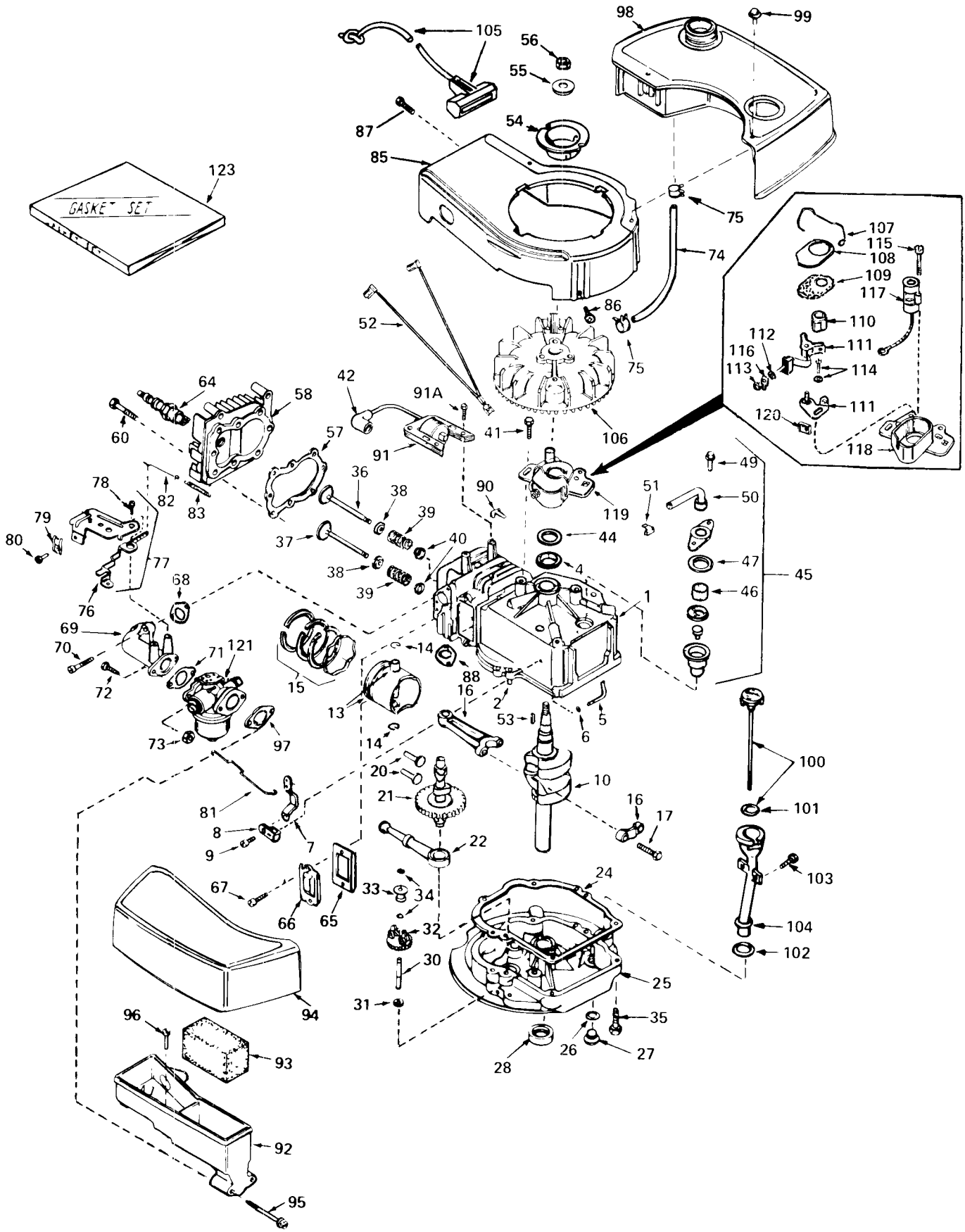

ENGINE TECUMSEH MODEL NO. TNT 100-10056C

Ref. No.	Part No.	Description	No. Used
1	34429	Cylinder Assy. (Incl. Ref.#2 & 4)	1
2	26727	Pin, Dowel	2
4	32600	Seal, Oil	1
5	30589	Rod, Governor (Incl. Ref. #6)	1
6	28277	Washer, Flat	1
7	32651	Lever, Governor	1
8	31335	Clamp, Governor Lever	1
9	650548	Screw, Hex Washer Hd.	1
10	34440	Crankshaft	1
13	32603A	Piston, Pin & Ring Assembly (Incl. Ref. #14 & 15) (Std.)	1
13	32604A	Piston, Pin & Ring Assy. (Incl. Ref.#14 & 15) (.010 Oversize)	1
13	32605A	Piston, Pin & Ring Assy. (Incl. Ref.#14 & 15) (.020 Oversize)	1
14	20381	Ring, Piston Pin Retaining	2
15	32606	Ring Set, Piston (Std.)	1
15	32607	Ring Set, Piston (.010 Oversize)	1
15	32608	Ring Set, Piston (.020 Oversize)	1
16	30963B	Rod Assy., Connecting (Incl. Ref. #17)	1
17	32610A	Bolt, Connecting Rod	2
20	27241	Lifter, Valve	2
21	33553	Camshaft (Mech. Comp. Release)	1
22	29914	Pump Assembly, Oil	1
24	*26750A	Gasket, Mounting Flange	1
25	30594B	Flange Assy., Mounting (Incl. Ref. #26 thru 30)	1
26	*28833	Gasket, Oil Drain Plug	1
27	27244	Plug, Oil Drain	1
28	26208	Seal, Oil	1
30	30574	Shaft, Mechanical Governor	1
31	30590A	Washer, Flat	1
32	30591	Gear Assy., Gov. (Incl. Ref.#31)	1
33	30588A	Spool, Governor	1
34	29193	Ring, Retaining	2
35	650488	Screw, Hex Hd. Sems	6
36	29314A	Valve, Intake (Std.) (Incl. Ref. #38, 39 & 40)	1
36	29315B	Valve, Intake (1/32" Oversize) (Incl. Ref.# 38, 39 & 40)	1
37	29313B	Valve, Exhaust (Std.) (Incl. Ref. #38, 39 & 40)	1
37	29315B	Valve, Exhaust (1/32" Oversize) (Incl. Ref. #38, 39 & 40)	1
38	31671	Cap, Upper Valve Spring	2
39	31672	Spring, Valve	2
40	31673	Cap, Lower Valve Spring	2
41	650489	Screw, Hex Hd. Sems	2
42	610118	Cover, Spark Plug	1
44	33876	Gasket, Stator	1
45	34214	Breather Assy. (Incl. Ref. #46, 47, 49, 50 & 51)	1
46	33734	Element, Breather	1
47	*33735	Gasket, Breather	1
49	650768	Screw, Hex Hd. Thread Forming W/Conical Washer	2
50	33886	Tube, Breather	1
51	33887	Clip, Breather Tube	1
52	34459	Wire, Ground	1
53	610995	Key, Flywheel	1
54	34461	Pulley, Starter	1
55	650815	Washer, Belleville	1
56	650816	Nut, Flywheel	1
57	*33015	Gasket, Cylinder Head	1
58	34342	Head, Cylinder	1
60	6021A	Screw, Hex Flange Hd.	8
64	33636	Plug, Spark (Champion J-8 Or Equivalent) Except For Canada	1
64	34251 Canada	Resistor Spark Plug (Canadian Regulations Require RJ-17LM Resistor Spark Plug)	1
65	*27234	Gasket, Valve Spring Cover	1
66	32755	Cover, Valve Spring Box	1
67	650128	Screw, Fil. Hd. Sems	2
68	*32649	Gasket, Intake Pipe	1
69	33004	Pipe, Intake	1
70	650451	Screw, Hex Hd. Sems	2
71	*31688	Gasket, Carburetor	1
72	6201	Screw, Hex Hd.	2
73	29752	Nut & Lockwasher Assembly	2
74	30705	Line, Fuel	1
75	26460	Clamp, Fuel Line	2
76	34310	Lever, Control	1
77	33889A	Control Assy., Speed (Incl. Ref. #76 & 78)	1
78	650804	Screw, Hex Washer Hd. Shoulder Self-Tap	1
79	27793	Clip, Conduit	1
80	28942	Screw, Hex Washer Hd. Sems	1
81	34336	Link, Governor-to-Throttle	1
82	33151	Link, Governor Spring	1
83	33890	Spring, Governor	1
85	33907A	Housing, Blower	1
86	650497	Screw, Flex Pan Hd.	2
87	30200	Screw, Hex Washer Hd. Self-Tap Sems	2
88	*30081	Gasket, Exhaust	1
90	29443	Clip, Fuel Line	1
91	34431	Lamination & Coil Assembly	1
91A	650814	Screw, Hex Washer Hd. Sems	2
92	33895	Body, Air Cleaner	1
93	33896	Filter, Air Cleaner	1
94	33897	Cover, Air Cleaner	1
95	650762	Screw, Fil. Hd. Sems	2
96	650784	Screw, Hex Hd. W/Flatwasher Taptite	1
97	*33051	Gasket, Air Cleaner	1
98	33904A	Tank, Fuel	1
99	28763	Screw, Hex Washer Hd. Shakeprf.	2
100	33894A	Dipstick, Oil (Incl. Ref. #101) (Twist Lock)	1
101	33590	"O" Ring	1
102	34265	Gasket	1
103	650562	Screw, Hex Washer Hd. Shakeprf.	2
104	34380	Tube, Oil Filler (Plastic)	1
105	590343	Rope Assembly, Starter	1
106	611010	Flywheel	1
107	30551	Spring, Breaker Box Dust Cover	1
108	610947	Cover, Breaker Box Dust	1
109	610955	Gasket, Dust Cover	1
110	30992	Cam, Breaker	1
111	30547A	Breaker Assembly	1
112	610385	Washer, Terminal	1
113	610408	Nut, Terminal	1
114	29181	Screw & Washer Assy., Breaker	1
115	610593	Screw, Condenser Fastening	1
116	33356	Tab, Ground Terminal	1
117	30548B	Condenser	1
118	611008	Core & Plate Group	1
119	611006	Stator Assembly (Incl. Ref. #107, 111-118 & 120)	1
120	30549	Felt, Cam Wiper	1
121	632050	Carburetor (Incl. Ref. #71)	1
123	33906	Gasket Set (Incl. Items Marked*)	1

IDENTIFICATION AND ORDERING

MODEL AND SERIAL NUMBERS

The Mower has two identification numbers: a model number anc a serial number. The two numbers are stamped on a decal which is located on the mower housing between the rear wheels. In any correspondence concerning the mower, supply model and serial numbers to assure that correct information and replacement parts are obtained.

To order replacement parts from an Authorized TORO Service Dealer, supply the following information:

1. Model and serial numbers of the mower.
2. Part number, description, and quantity of part(s) desired.

Note: Do not order by reference number if a parts catalog is being used; use the PART NUMBER.

The Toro Promise

A ONE YEAR LIMITED WARRANTY

The Toro Company promises to repair any TORO Product if defective in materials or workmanship. The following time periods from the date of purchase apply:

Residential Product . . . . . 1 Year
Residential Products Used Commercially . . . 45 Days

The costs of parts and labor are included, but the customer pays the transportation costs. Just return any residential product to an Authorized TORO Service Dealer or TORO Distributor.

Should you feel your TORO Product is defective and wish to rely on The Toro Promise, the following procedure is recommended·

1. Contact any Authorized TORO Service Dealer, TORO Master Service Dealer, or TORO Distributor (the Yellow Pages of your telephone directory is a good reference source).
2. He will either instruct you to return the product to him or recommend another Authorized TORO Service outlet which might be more convenient.
3. Bring the product along with your original sales slip, or other evidence of purchase date, to the service dealer.
4. The servicing dealer will inspect the unit, advise you whether the product is defective and, if so, make all repairs necessary to correct the defect without extra charge to you

If for any reason you are dissatisfied with the dealer's analysis of the defect or the service performed, you may contact us

Write·

TORO Consumer Service Department
8111 Lyndale Avenue South
Minneapolis, Minnesota 55420

The above remedy of product defects through repair by an Authorized TORO Service Dealer is the purchaser's sole remedy for any defect.

THERE IS NO OTHER EXPRESS WARRANTY ALL IMPLIED WARRANTIES OF MERCHANTABILITY AND FITNESS FOR USE ARE LIMITED TO THE DURATION OF THE EXPRESS WARRANTY.

Some states do not allow limitations on how long an implied warranty lasts, so the above limitation may not apply to you.

This warranty applies only to parts or components which are defective and does not cover repairs necessary due to normal wear, misuse, accidents, or lack of proper maintenance. Regular, routine maintenance of the unit to keep it in proper operating condition is the responsibility of the owner.

All warranty repairs reimbursable under The Toro Promise must be performed by an Authorized TORO Service Dealer using Toro approved replacement parts.

Repairs or attemped repairs by anyone other than an Authorized TORO Service Account are not reimbursable under The Toro Promise In addition, these unauthorized repair attempts may result in additional malfunctions, the correction of which is not covered by warranty.

THE TORO COMPANY IS NOT LIABLE FOR INDIRECT, INCIDENTAL OR CONSEQUENTIAL DAMAGES IN CONNECTION WITH THE USE OF THE PRODUCT INCLUDING ANY COST OR EXPENSE OF PROVIDING SUBSTITUTE EQUIPMENT OR SERVICE DURING PERIODS OF MALFUNCTION OR NON-USE

Some states do not allow the exclusion or limitation of incidental or consequential damages, so the above limitation or exclusion may not apply to you.

This warranty gives you specific legal rights, and you may also have other rights which vary from state to state

COUNTRIES OTHER THAN THE UNITED STATES OR CANADA

Customers who have purchased TORO products exported from the United States or Canada should contact their TORO Distributor (Dealer) to obtain guarantee policies for your country, province or state. If for any reason you are dissatisfied with your Distributor's service or have difficulty obtaining guarantee information, contact the TORO importer. If all other remedies fail, you may contact us at The Toro Company.

International Group
Service Department
One Corporate Center
7401 Metro Boulevard
Minneapolis, Minnesota 55435 U S.A.

Compliance with Radio Interference Regulations Certified
Certifie Conforme au Reglement sur le Brouillage Radioelectrique

Litho in U.S A