Form No. 3328–108 Rev A

TORO®

42″ Rear Discharge Mower, 42″, 48″, and 52″ Side Discharge Mower

Wheel Horse® XT Series Garden Tractor Attachment

Model No. 78291—230000001 and Up
Model No. 78292—230000001 and Up
Model No. 78290—230000001 and Up
Model No. 78294—230000001 and Up

PROTOTYPE

Operator's Manual

Domestic English (EN)

Contents

	Page
Introduction	2
Safety and Instruction Decals	3
Setup	4
Loose Parts	4
Installing the Grass Deflector on 42 and 48 inch Side Discharge Mowers	4
Installing the Grass Deflector 52 inch Mowers	5
Installing the Mower	5
Checking the Side-to-Side Blade Cut	8
Adjusting the Side-to-Side Blade Cut	8
Checking the Front-to-Rear Blade Slope	8
Changing the Front-to-Rear Blade Slope	9
Transport Height Adjustment	9
Operation	10
Using the Side Discharge	10
Operating the Power Take Off (PTO)	10
Using the Attachment Power Lift	11
Operating the Attachment Lift Lever	11
Adjusting the Height of Cut	11
Removing the Mower	12
Tips for Mowing Grass	13
Maintenance	14
Recommended Maintenance Schedule	14
Servicing the Cutting Blades	14
Greasing and Lubrication	16
Removing the Hood	17
Servicing the Mower Belt	17
Replacing the Power Take Off (PTO) Belt	17
Replacing the Mower Drive Belt	18
Cleaning and Storage	18
Troubleshooting	19
The Toro Total Coverage Guarantee	20

Introduction

Read this manual carefully to learn how to operate and maintain your product properly. The information in this manual can help you and others avoid injury and product damage. Although Toro designs and produces safe products, you are responsible for operating the product properly and safely.

Whenever you need service, genuine Toro parts, or additional information, contact an Authorized Service Dealer or Toro Customer Service and have the model and serial numbers of your product ready. Figure 1 illustrates the location of the model and serial numbers on the product.

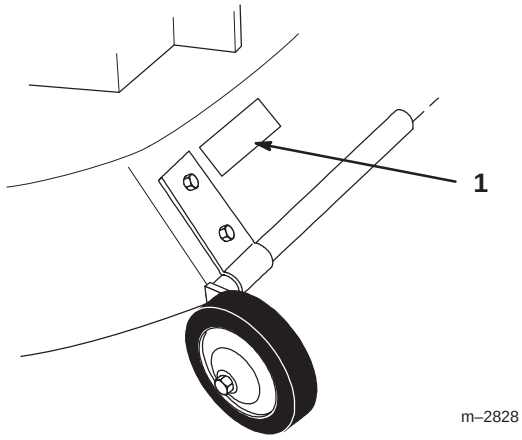

Figure 1

1. Location of the model and serial numbers

Write the product model and serial numbers in the space below:

Model No. _____

Serial No. _____

This manual identifies potential hazards and has special safety messages that help you and others avoid personal injury and even death. ***Danger***, ***Warning***, and ***Caution*** are signal words used to identify the level of hazard. However, regardless of the hazard, be extremely careful.

Danger signals an extreme hazard that *will* cause serious injury or death if you do not follow the recommended precautions.

Warning signals a hazard that *may* cause serious injury or death if you do not follow the recommended precautions.

Caution signals a hazard that may cause minor or moderate injury if you do not follow the recommended precautions.

This manual uses two other words to highlight information. **Important** calls attention to special mechanical information and **Note:** emphasizes general information worthy of special attention.

PROTOTYPE

©2003 by The Toro Company
8111 Lyndale Avenue South
Bloomington, MN 55420-1196

All Rights Reserved
Printed in the USA

Safety and Instruction Decals

Safety decals and instructions are easily visible to the operator and are located near any area of potential danger. Replace any decal that is damaged or lost.



111655



93-1122



65-2690

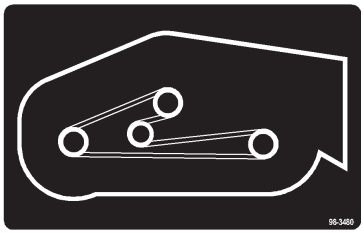

98-3480



92-7108

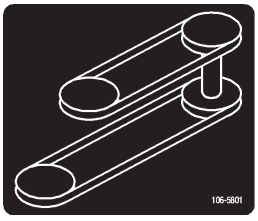

106-5801



92-7109



43-8480

PROTOTYPE

Setup

Note: Determine the left and right sides of the machine from the normal operating position.

Loose Parts

Note: Use the chart below to identify parts used for assembly.

DESCRIPTION	QTY.	USE
Grass deflector	1	Installing the grass deflector on 42 and 48 inch side discharge mowers
Torsion spring	1	
Washer, 1/2 inch	1	
Cotter pin, 3/4 inch	1	
Plastic washer	2	
Rubber bushing	1	
Jam nut, 3/8 inch	1	
Grass deflector	1	Installing the grass deflector on 52 inch mowers
Spring	2	
Bolt, 3/8 x 3-1/2 inch	2	
Locknut, 3/8 inch	2	
Belt, PTO Drive	1	Installing the mower
Belt, Mower Drive	1	
Pulley box assembly	1	
Operator's Manual	1	Read before operating

Warning

An uncovered discharge opening could allow the lawn mower to throw objects in the operator's or bystander's direction and result in serious injury. Also, contact with the blade could occur.

- ***Never* remove the grass deflector from the mower because the grass deflector routes material down toward the turf. If the grass deflector is ever damaged, replace it immediately.**
- ***Never* put your hands or feet under the mower.**
- ***Never* try to clear discharge area or mower blades unless you move the power take off (PTO) to *Off* and rotate the ignition key to *Off*. Also remove the key and pull the wire off the spark plug(s).**

Installing the Grass Deflector on 42 and 48 inch Side Discharge Mowers

1. Locate items shown in Figure 2.
2. Place the straight end of the spring into the small hole in the discharge chute (Fig. 2).
3. Position the spring and discharge chute over post on rear of deck and secure with a washer (1/2 inch) and a cotter pin (3/4 inch) (Fig. 2).
4. Slide the rubber bushing and plastic washer over the stud at the front of mower.
5. Place the discharge chute over the stud and secure it with a plastic washer and jam nut (3/8 inch) (Fig. 2).

Important Grass deflector must be spring loaded in the down position. Lift deflector up to test that it snaps to the full down position.

PROTOTYPE

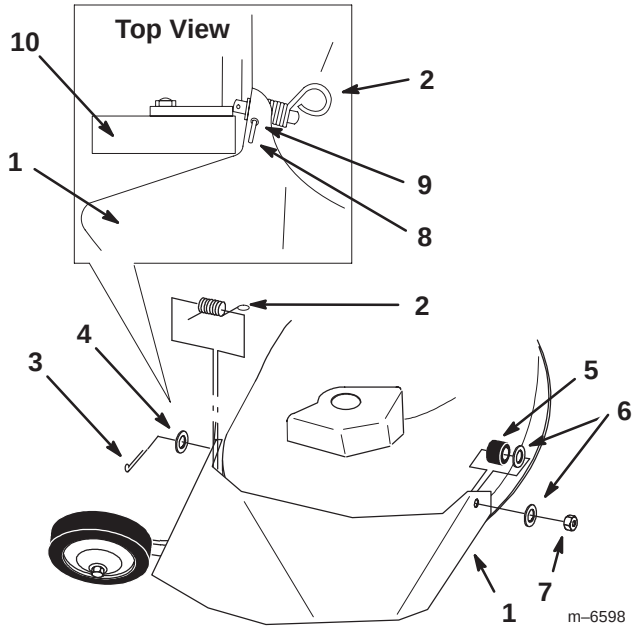

Figure 2

1. Discharge chute
2. Spring
3. Cotter pin, 3/4 inch
4. Washer, 1/2 inch
5. Rubber bushing
6. Plastic washer
7. Jam nut, 3/8 inch
8. Straight end of spring
9. Small hole in discharge chute
10. Wheel

Installing the Grass Deflector 52 inch Mowers

1. Place the springs into the brackets on mower with the hooked ends over the raised back (Fig. 3).

2. Align the grass deflector with the holes in the brackets and the spring straight end in the space under the hinge and above the deflector (Fig. 3).

3. Secure the deflector to the bracket with 2 bolts (3/8 x 3-1/2 inch) and 2 locknuts (3/8 inch) (Fig. 3).

4. Lift grass deflector and check that it is spring loaded and pivots freely to the full down position.

Important Grass deflector must be spring loaded in the down position. Lift the deflector up to test that it snaps down to the full down position.

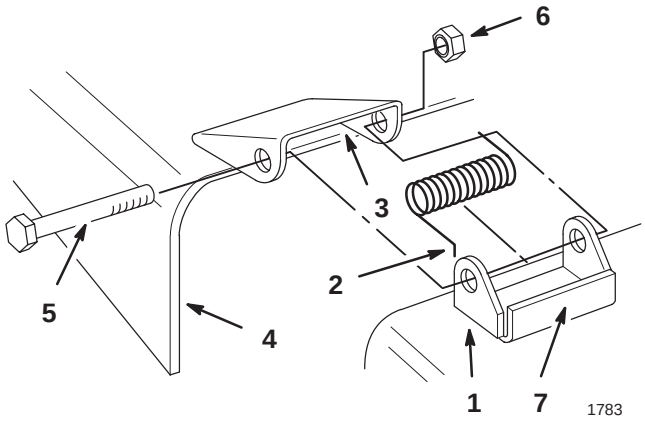

Figure 3

1. Bracket
2. Spring hook end
3. space for spring
4. Grass deflector
5. Bolt, 3/8–3-1/2 inch
6. Lock nut, 3/8 inch
7. Raised back

Installing the Mower

1. Disengage the PTO and set the parking brake.

2. Stop the engine, remove the key, and wait for all moving parts to stop before leaving the operating position.

3. Position the mower on the right side of the tractor.

4. Turn the front wheels fully to the left and raise attachment lift lever or electric lift all the way up. Refer to the tractor *Operator's Manual*.

5. Open the mid-mount hitch by pulling out the J–pin and moving the lock handle rearward (Fig. 4).

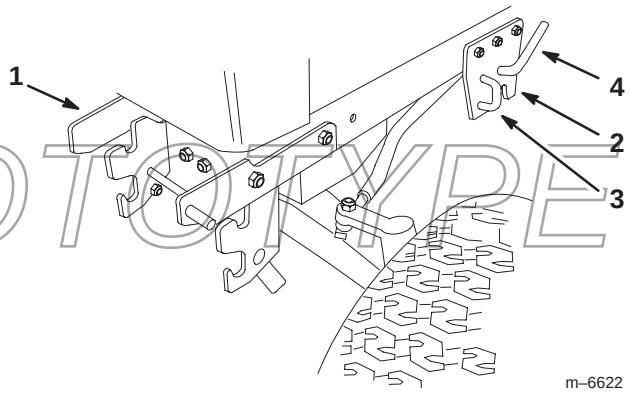

Figure 4

1. Front hitch
2. Mid-mount hitch
3. J–pin
4. Lock handle

PROTOTYPE

6. Slide the mower under the tractor from the right side and slide the attachment lift between the center and left side level bar (Fig. 5).

7. Straighten the front wheels and lower the attachment lift lever or electric lift to the mounting position; refer to the tractor *Operator's Manual*.

8. Place the attachment lift pin into the slot in the center lever bar and secure it with a washer (3/4 inch) and a hairpin cotter (Fig. 5).

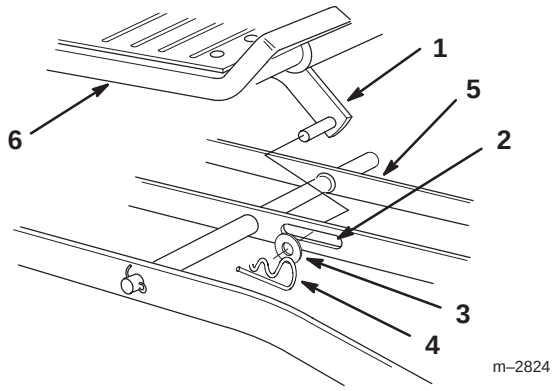

Figure 5

1. Attachment lift
2. Slot in center level bar
3. Washer
4. Hairpin cotter pin
5. Left level bar
6. Right footrest

9. Rotate the front mounting shaft so the fork faces straight up and aligned so the spacers are between the mid-mount hitch plates (Fig. 6).

10. Lift the mower with the attachment lift lever or electric lift and guide the fork to capture the hitch rod (Fig. 6).

11. Close the mid-mount hitch lock handle by rotating it forward (Fig. 4).

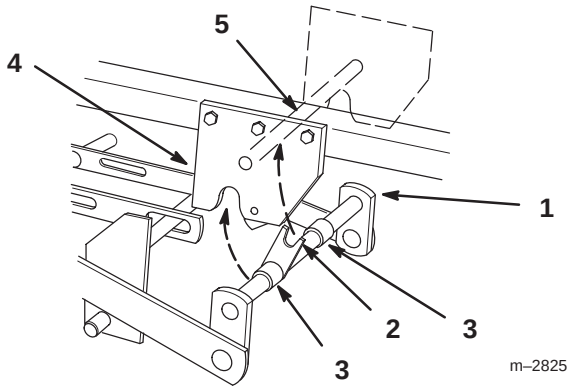

Figure 6

1. Front mounting shaft
2. Fork
3. Spacer
4. Mid-mount hitch plate
5. Hitch rod

Installing the Front Pulley Box

Install the front pulley box if it is not already installed.

1. Rotate the knobs to adjust the idler pulleys so there is a 1/4 inch (7 mm) clearance between the idler arms and the mounting pins.

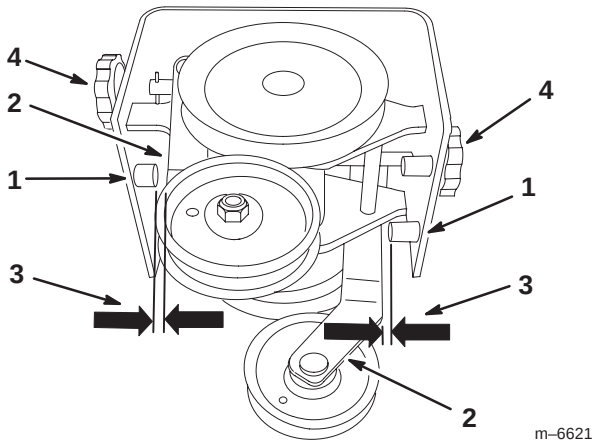

Figure 7

1. Mounting Pins
2. Idler arm
3. 1/4 inch (7 mm) clearance
4. Knob

PROTOTYPE

2. Make sure the front latches are open and then slide the pulley box into the front hitch.

Note: Make sure the pulley box engages and closes the latches.

3. Adjust both idler pulleys until they are totally to the outside by turning the knobs.

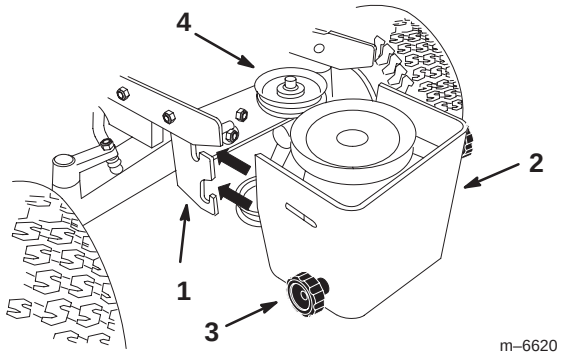

Figure 8

1. Front hitch
2. Pulley box
3. Knob
4. Idler pulley

Installing the PTO Belt

Warning

Components around engine will be hot if the machine has been running. Touching hot components can cause burns.

- **Do not touch the engine components or the muffler when hot.**
- **Allow the engine to cool before performing maintenance.**

If desired, remove the hood for better access to the upper pulleys in the pulley box. Refer to Removing the Hood on page 17.

1. Install the PTO belt onto the clutch pulley (Fig. 9).

2. Install the PTO belt onto the upper pulley and upper idler pulley in the pulley box (Fig. 9).

3. Turn the left knob on the front pulley box to tighten the PTO drive belt (Fig. 9). There needs to be a 1/2 inch (13 mm) deflection in the belt.

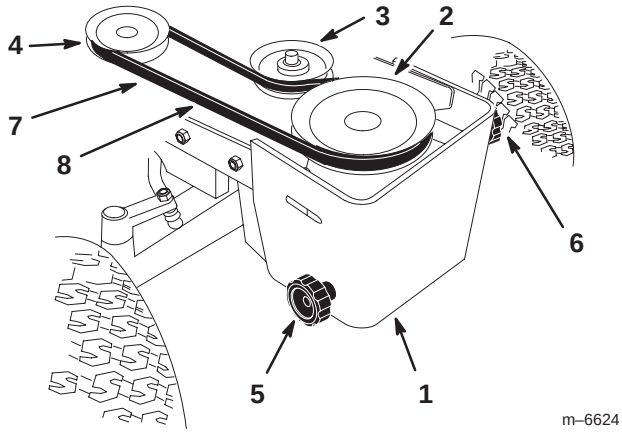

Figure 9

1. Pulley box
2. Upper pulley
3. Upper Idler pulley
4. PTO clutch pulley
5. Right knob
6. Left knob
7. PTO belt
8. Check 1/2 inch deflection here

Installing the Mower Drive Belt

1. Adjust the mower height–of–cut to the middle position; refer to Adjusting the Height–of–Cut, page 11.

2. Install the mower drive belt onto the mower center pulley (Fig. 10). Ensure that it is on the upper center pulley.

3. Install the mower drive belt onto the lower pulley and the lower idler pulley in the pulley box (Fig. 10).

4. Turn the right knob on the front pulley box to tighten the mower drive belt (Fig. 9). There needs to be a 1/2 inch (13 mm) deflection in the belt.

PROTOTYPE

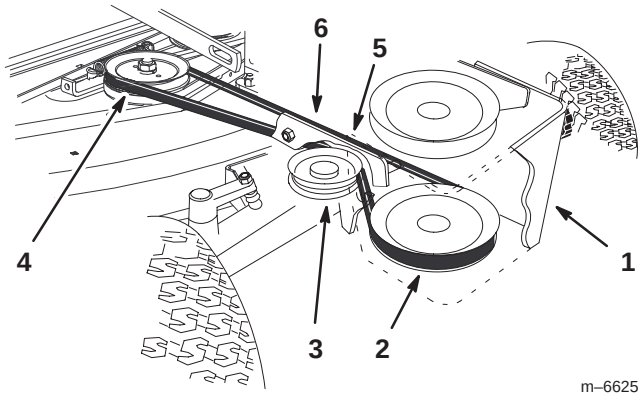

Figure 10

1. Pulley box
2. Lower pulley
3. Lower Idler pulley
4. Mower center pulley
5. Mower drive belt
6. Check 1/2 inch deflection here

Checking the Side-to-Side Blade Cut

1. Check the tire pressure on the tractor. Refer to the tractor operator's manual.

2. Position the blades side-to-side (Fig. 11). Measure at **A** and **B** locations (Fig. 11) from a level surface to the cutting edge of blade tips (Fig. 12).

3. The difference between measurements **A** and **B** should be no more than a 1/4 inch (6 mm).

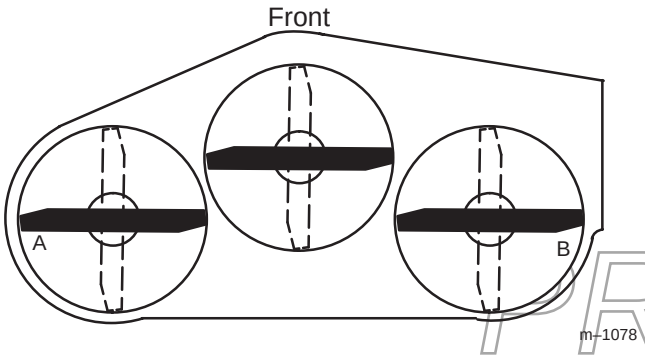

Figure 11

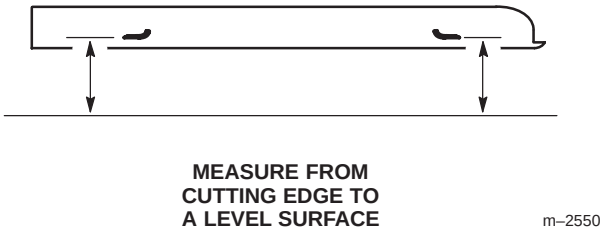

Figure 12

Adjusting the Side-to-Side Blade Cut

This adjustment is available if necessary to compensate for uneven side-to-side cut.

1. Adjust the side-to-side cut by adjusting the two carriage bolts (Fig. 13) on the rear left of the mower.

2. After adjusting the carriage bolts, check the side–to–side blade cut. Refer to Checking the Side–to–Side Blade Cut (Fig. 13).

3. Repeat steps 1 and 2 until the difference is no more than a 1/4 inch.

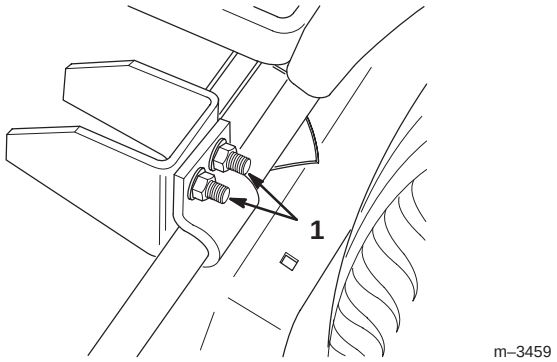

Figure 13

1. Side-to-side adjustment bolts

PROTOTYPE

Checking the Front-to-Rear Blade Slope

Check the front-to-rear blade slope any time you install the mower.

1. Check the tire pressure on the tractor. Refer to the tractor operator's manual.

2. Position one blade front-to-rear (Fig. 14). Measure at **C** and either **D** location (Fig. 14) from a level surface to the cutting edge of the blade tips (Fig. 15).

3. The mower blade should be **1/8–1/4 inch (4–7 mm) lower in front at *C* than in the rear at *D*.** Rotate the blades and repeat for the other blades.

4. If it is not correct, proceed to Changing the Front–to–Rear Blade Slope; page 9.

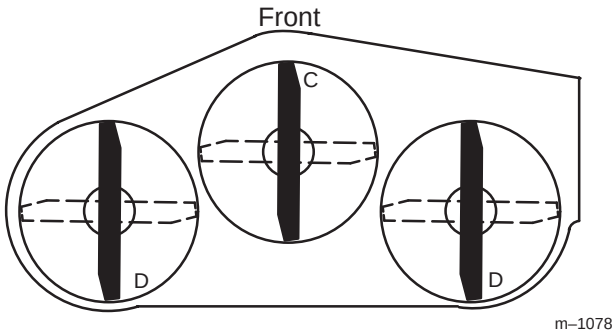

Figure 14

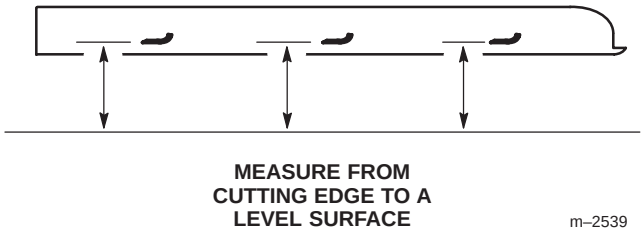

Figure 15

Changing the Front-to-Rear Blade Slope

1. To adjust the front–to–rear blade slope turn the locknut on rear adjustable link (Fig. 16).

Note: To raise the front of the mower, turn locknut clockwise, to lower front turn counterclockwise.

2. After adjusting, check the front–to–rear blade slope. Refer to Checking the Front–to–Rear Blade Slope; page 8.

3. Repeat steps 1 and 2 until the difference is no more than a 1/4 inch.

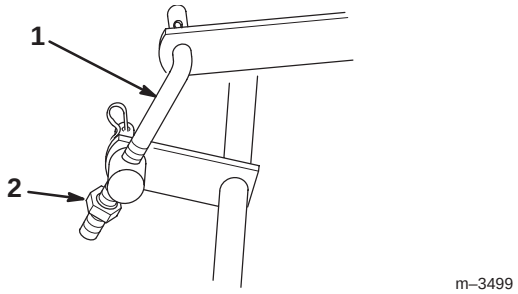

Figure 16

1. Adjustable link
2. Locknut

Transport Height Adjustment

Transport height is adjusted to stabilize the mower in the up, locked position.

1. Raise the mower to the highest height–of–cut (Fig. 23) and check if the transport level stops contact the bottom of the draft bars (Fig. 17).

2. If needed, loosen and adjust the transport level stops so they just contact the bottom of the draft bars (Fig. 17).

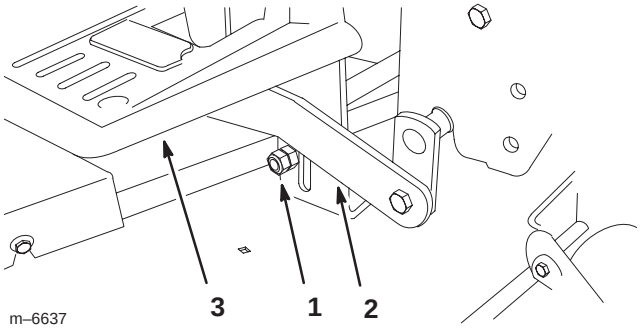

Figure 17

1. Transport level stop—right side shown
2. Draft bar
3. Right side footrest

3. Raise the attachment lift lever or electric lift all the way up. Check if bumpers, on rear of mower draft bars contact under footrests (Fig. 18).

PROTOTYPE

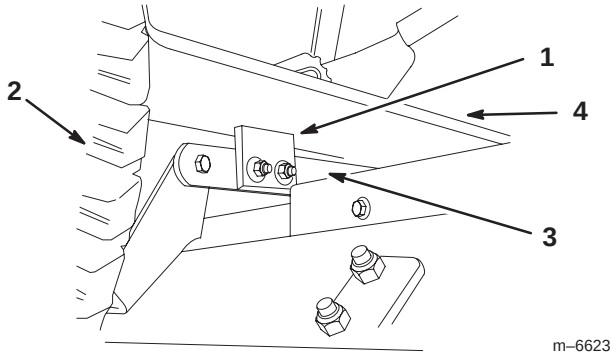

Figure 18

1. Bumper
2. Right rear tire
3. Draft bar
4. Footrest

4. If the bumpers do not contact footrests, adjust the lift chain by turning the nut on the eyebolt in the rear hole of tractor lift (Fig. 19). Turn the nut clockwise to raise the mower or counterclockwise to lower it.

5. If one of the bumpers does not contact the footrest, adjust the appropriate transport level stop (Fig. 17).

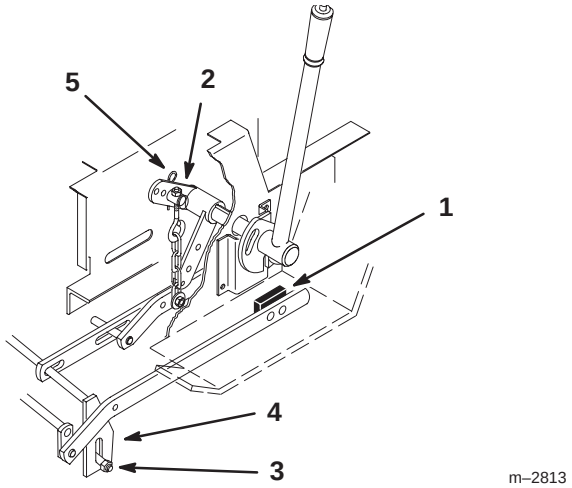

Figure 19

1. Bumper
2. Trunnion
3. Leveling bolts
4. Transport level stop
5. Hairpin cotter

Operation

Note: Determine the left and right sides of the machine from the normal operating position.

Using the Side Discharge

Warning

An uncovered discharge opening could allow the lawn mower to throw objects in the operator's or bystander's direction and result in serious injury. Also, contact with the blade could occur.

- ***Never* remove the grass deflector from the mower because the grass deflector routes material down toward the turf. If the grass deflector is ever damaged, replace it immediately.**
- ***Never* put your hands or feet under the mower.**
- ***Never* try to clear discharge area or mower blades unless you move the power take off (PTO) to *Off* and rotate the ignition key to *Off*. Also remove the key and pull the wire off the spark plug(s).**

1. The mower has a hinged grass deflector that disperses clippings to the side and down toward the turf.

Operating the Power Take Off (PTO)

The power take off (PTO) switch engages and disengages power to the electric clutch.

The PTO light, in the Indicator Module, will be on when the ignition key is in run or the lights position and the power take off (PTO) is engaged. When this light is on, it is a reminder the starter will not crank and to turn the off PTO before getting off the tractor.

Engaging the Power Take Off (PTO)

1. Move the throttle to the fast position.

2. Pull the power take off (PTO) to the **on** position (Fig. 20).

PROTOTYPE

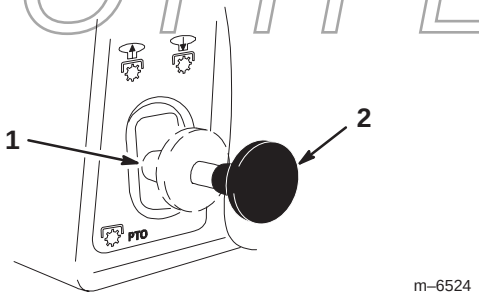

Figure 20

1. PTO—Off
2. PTO—On

Disengaging the Power Take Off (PTO)

1. Push the power take off (PTO) to the **off** position (Fig. 20).

Using the Attachment Power Lift

The attachment power lift (Fig. 21) is used to raise and lower attachments.

Raising Attachments

1. Turn key to the **on** or **run** position (Fig. 21).
2. Push the lift switch in the **up** direction to raise the attachment lift (Fig. 21). This will lift and hold the attachment in the up, or raised position.

Lowering Attachments

1. Turn key to the **on** or **run** position (Fig. 21).
2. Push the lift switch in the down direction to lower the attachment lift (Fig. 21). This will lower the attachment lift.

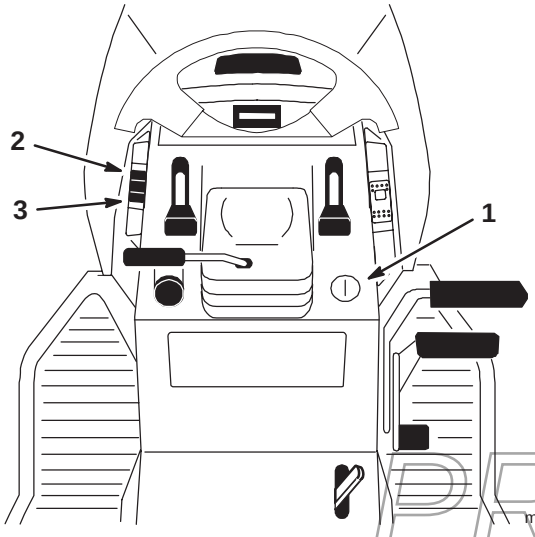

Figure 21

1. Key
2. Lift switch —up
3. Lift switch —down

Operating the Attachment Lift Lever

The attachment lift lever (Fig. 22) is used to raise and lower various attachments.

Raising an Attachment

1. Depress the brake pedal to stop the machine.
2. Pull the attachment lift lever rearward until the latch locks. In this position the lift will hold the attachment in the up, or raised position.

Lowering an Attachment

1. Depress the brake pedal to stop the machine.
2. Pull the attachment lift lever rearward, to release the lift pressure, and push the button on top to release the latch. Move the lift lever forward to lower the attachment.

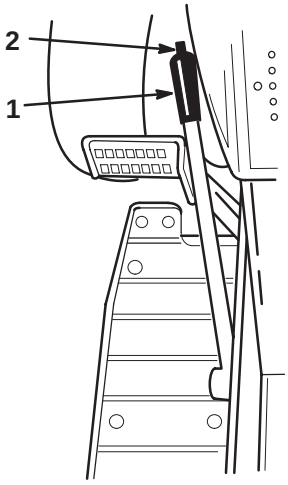

Figure 22

1. Lift lever
2. Button

PROTOTYPE

Adjusting the Height of Cut

The rear support wheels adjust for different heights of cut, between 1-1/2 and 4-1/2 inch (4 to 11 cm).

1. Disengage the PTO and set the parking brake.
2. Stop the engine, remove the key, and wait for all moving parts to stop before leaving the operating position.

3. Pull the height-of-cut lever out to disengage it from the quadrant (Fig. 23).

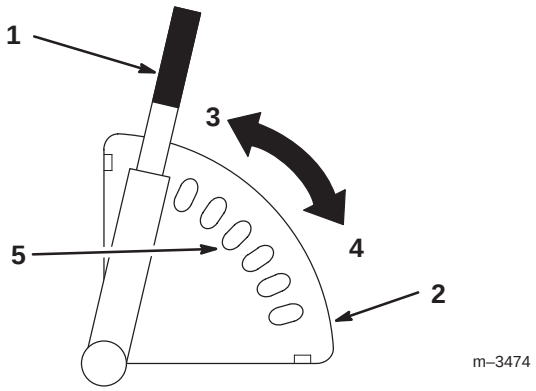

Figure 23

1. Height-of-cut lever
2. Quadrant
3. High
4. Low
5. Medium position

4. Adjust the height-of-cut to the desired level (Fig. 23).
5. Release the lever inward to lock it into the quadrant (Fig. 23).

Removing the Mower

1. Disengage the PTO and set the parking brake.
2. Stop the engine, remove the key, and wait for all moving parts to stop before leaving the operating position.
3. Lower the mower.
4. Remove the washer (3/4 inch) and a hairpin cotter from the attachment lift pin into the slot in the center lever bar (Fig. 5).
5. Open the mid-mount hitch by pulling out the J–pin and moving the lock handle rearward (Fig. 24).
6. Turn the right knob on the front pulley box to loosen the mower drive belt (Fig. 9).
7. Remove the mower drive belt from the mower (Fig. 10).
8. Remove the mower drive belt from the lower pulley and lower idler pulley in the pulley box (Fig. 10).
9. Turn the front wheels fully to the left and raise the attachment lift lever or electric lift all the way up.

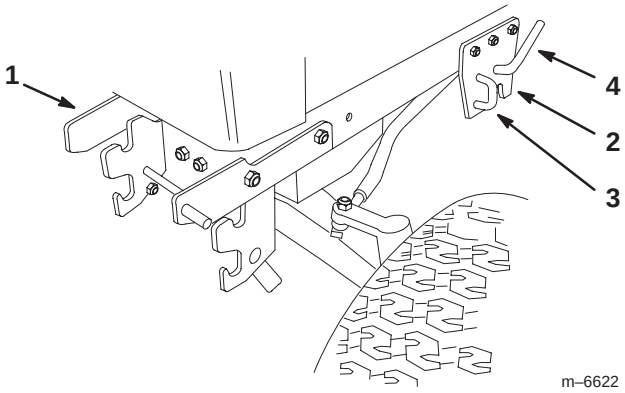

Figure 24

1. Front hitch
2. Mid-mount hitch
3. J–pin
4. Lock handle

PROTOTYPE

10. Slide the mower from under the chassis to the right side of the tractor (Fig. 5).
11. If needed, remove the pulley box by pushing on the release lever and removing the pulley box (Fig. 24).

Tips for Mowing Grass

Fast Throttle Setting

For best mowing and maximum air circulation, operate the engine at fast. Air is required to thoroughly cut grass clippings, so do not set the height-of-cut so low, as to totally surround the mower by uncut grass. Always try to have one side of the mower free from uncut grass, which allows air to be drawn into the mower.

Cutting a Lawn for the First Time

Cut grass slightly longer than normal to ensure the cutting height of the mower does not scalp any uneven ground. However, the cutting height used in the past is generally the best one to use. When cutting grass longer than six inches tall, you may want to cut the lawn twice to ensure an acceptable quality-of-cut.

Cut 1/3 of the Grass Blade

It is best to cut only about 1/3 of the grass blade. Cutting more than that is not recommended, unless grass is sparse or it is late fall when grass grows more slowly.

Mowing Direction

Alternate mowing direction to keep the grass standing straight. This also helps disperse clippings which enhances decomposition and fertilization.

Mow at Correct Intervals

Normally, mow every 4 days. But remember, grass grows at different rates at different times. So to maintain the same cutting height, which is a good practice, mow more often in early spring. As the grass growth rate slows in mid summer, mow less frequently. If you cannot mow for an extended period, first mow at a high cutting height; then mow again 2 days later at a lower height setting.

Ground Speed

To improve cut quality, use slower ground speed.

PROTOTYPE

Avoid Cutting Too Low

If the cutting width of the mower is wider than the mower you previously used, raise the cutting height to ensure uneven turf is not cut too short.

Long Grass

If the grass is ever allowed to grow slightly longer than normal, or if it contains a high degree of moisture, raise the cutting height higher than usual and cut the grass at this setting. Then cut the grass again using the lower, normal setting.

When Stopping

If the machine's forward motion must be stopped while mowing, a clump of grass clippings may drop onto your lawn. To avoid this:

1. With the blade(s) engaged, move onto a previously cut area.
2. To disperse the clippings evenly, raise the mower one or two height-of-cut settings while driving forward with the blade(s) engaged.

Keep the Underside of the Mower Clean

Clean clippings and dirt from the underside of the mower after each use. If grass and dirt build up inside the mower, cutting quality will eventually become unsatisfactory.

Blade Maintenance

Maintain a sharp blade throughout the cutting season because a sharp blade cuts cleanly without tearing or shredding the grass blades. Tearing and shredding turns grass brown at the edges, which slows growth and increases the chance of disease. Every 30 days, check the cutter blade(s) for sharpness and file down any nicks.

Maintenance

Note: Determine the left and right sides of the machine from the normal operating position.

Recommended Maintenance Schedule

Maintenance Service Interval	Maintenance Procedure
Each Use	• Mower Housing—clean
5 Hours	• Cutter Blade—check • Mower Housing—clean
25 Hours	• Mower deck—grease
At Storage	• Cutter Blade—check • Mower deck—grease • Belts—check for wear/cracks • Mower Housing—clean • Chipped Surfaces—paint • Tires—check pressure

Important Refer to your engine operator's manual for additional maintenance procedures.

Caution

If you leave the key in the ignition switch, someone could accidently start the engine and seriously injure you or other bystanders.

Remove the key from the ignition and disconnect the wire from the spark plug(s) before you do any maintenance. Set the wire aside so that it does not accidentally contact the spark plug.

Servicing the Cutting Blades

To assure a superior quality of cut, keep the blade(s) sharp. For convenient sharpening and replacement, you may want to have an extra blade(s).

Danger

A worn or damaged blade can break, and a piece of the blade could be thrown into the operator's or bystander's area, resulting in serious personal injury or death.

- **Inspect the blade periodically for wear or damage.**
- **Replace a worn or damaged blade.**

Warning

A blade that is bent or damaged could break apart and could seriously injure or kill you or bystanders.

- **Always replace bent or damaged blade with a new blade.**
- **Never file or create sharp notches in the edges or surfaces of blade.**

PROTOTYPE

Inspecting the Blade(s)

Inspect the blades every 5 hours.

1. Remove the mower; refer to Removing the Mower, page 12.
2. Carefully tip the mower over.

3. Inspect the cutting edges (Fig. 25). If the edges are not sharp or have nicks, remove the blade(s) and sharpen them; refer to Sharpening the Blade(s), page 16.

4. Inspect the blade(s), especially the curved area (Fig. 25). If you notice any damage, wear, or a slot forming in this area (Fig. 25), immediately install a new blade.

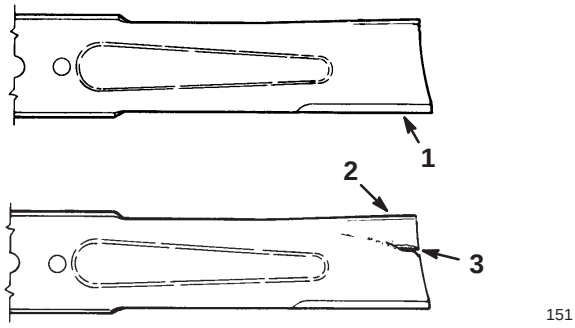

Figure 25

1. Cutting edge
2. Curved area
3. Wear/slot forming

Removing the Blades for a 42 inch Side or Rear Discharge Mower

Note: Make sure the blade and hardware are install in the positions shown in Figure 26.

1. Remove the mower; refer to Removing the Mower, page 12.
2. Carefully tip the mower over.
3. Remove the nut, flat washer, blade and washer (thick) (Fig. 26). A block of wood may be wedged between the blade and the mower to lock the blade when you are removing the bolt.
4. Inspect all parts. If damage is noticed, install new parts.

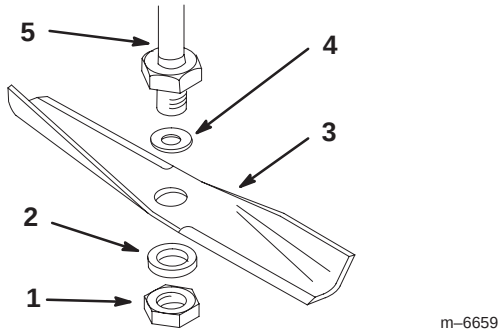

Figure 26

1. Nut
2. Washer – thick
3. Blade
4. Flat washer – thin
5. Spindle

Removing the Blades for a 48 inch Mower

Note: Make sure the blade and hardware are install in the positions shown in Figure 27.

1. Remove the mower; refer to Removing the Mower, page 12.
2. Carefully tip the mower over.
3. Remove the nut, washer (thick), blade and flat washer (Fig. 27). A block of wood may be wedged between the blade and the mower to lock the blade when you are removing the bolt.
4. Inspect all parts. If damage is noticed, install new parts.

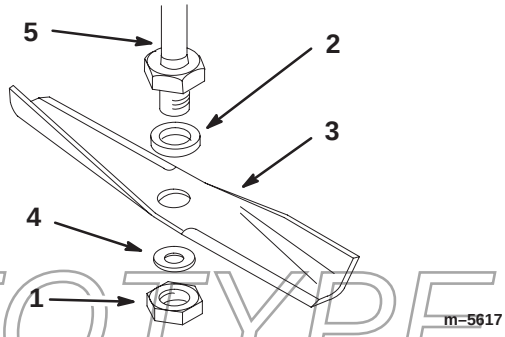

Figure 27

1. Nut
2. Washer – thick
3. Blade
4. Flat washer – thin
5. Spindle

PROTOTYPE

Removing the Blades for a 52 Inch Mower

1. Remove the mower; refer to Removing the Mower, page 12.
2. Carefully tip the mower over.
3. Remove the bolt, blade stiffener and blade (Fig. 28). A block of wood may be wedged between the blade and the mower to lock the blade when you are removing the bolt.
4. Inspect all parts. If a defect or damage is noticed, install new parts.

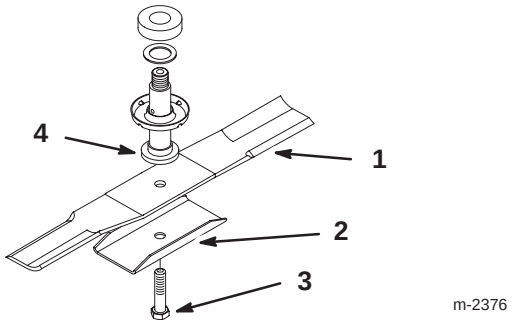

Figure 28

1. Blade
2. Blade stiffener
3. Bolt
4. Spindle

Sharpening the Blades

1. Use a file to sharpen the cutting edge at both ends of the blade (Fig. 29). Maintain the original angle. The blade retains its balance if the same amount of material is removed from both cutting edges.

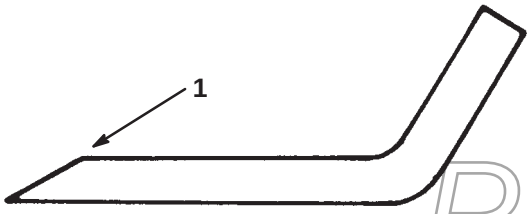

Figure 29

1. Sharpen at original angle

2. Check the balance of the blade by putting it on a blade balancer (Fig. 30). If the blade stays in a horizontal position, the blade is balanced and can be used. If the blade is not balanced, file some metal off the back side of the blade. Repeat this procedure until the blade is balanced.

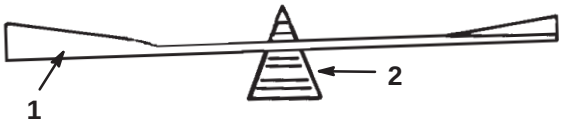

Figure 30

1. Blade
2. Balancer

Installing the Blade(s)

1. Install the washer, blade, flat washer, and the blade nut (Fig. 26).

Important The curved part of the blade must be pointing toward the inside of the mower to assure proper cutting.

2. Tighten the blade nut to 80–100 ft–lb (109–136 N•m).

Greasing and Lubrication

Service Interval/Specification

Grease the mower after every 25 operating hours or once a year, whichever occurs first. Grease more frequently when operating conditions are extremely dusty or sandy.

Grease Type: General-purpose grease.

How to Grease

1. Disengage the power take off (PTO), set the parking brake, and turn the ignition key to off. Remove the key
2. Clean the grease fittings with a rag. Make sure to scrape any paint off the end of the fitting(s).
3. Connect a grease gun to the fitting. Pump grease into the fittings.
4. Wipe up any excess grease.

PROTOTYPE

Where to Add Grease

1. Lubricate the blade spindles (Fig. 31). The side discharge model is shown, the rear discharge model will have the same spindles to grease.

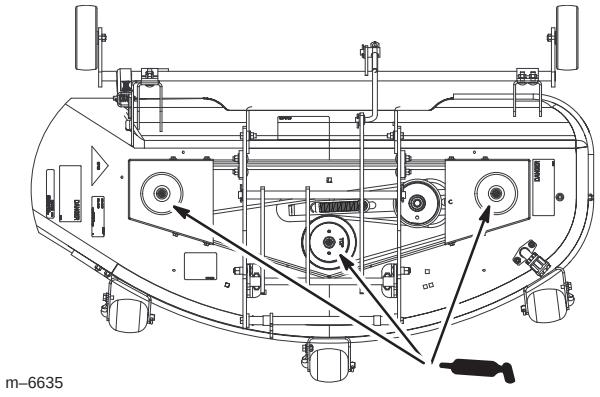

Figure 31

Removing the Hood

If desired, remove the hood for better access to the upper pulleys in the pulley box.

1. Rotate the hood fully forward (Fig. 32).
2. Disconnect the wire harness at the front left of the machine. The harness leads up the to the head lights (Fig. 32).
3. Slide the hood to the left side of the machine and off of the pivot pegs (Fig. 32).

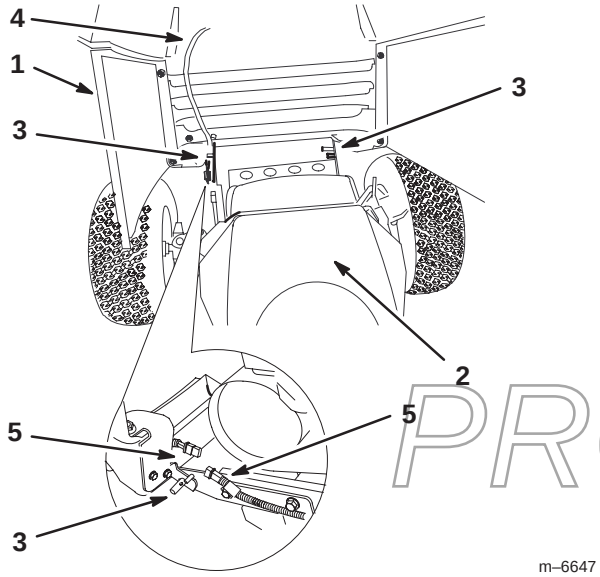

Figure 32

1. Hood—open position
2. Engine
3. Pivot peg
4. Wire harness
5. Harness connector

4. To install the hood, install the hood onto the pegs and connect the harness (Fig. 32).
5. Close the hood.

Servicing the Mower Belt

Removing the Mower Belt

1. Remove the mower; refer to Removing the Mower, page 12.
2. Remove the pulley cover mounting screws and both pulley covers.
3. Push on the idler to release the tension and remove the belt from the pulleys (Fig. 33).

Installing the Mower Belt

1. Install the new belt around the blade pulleys and the idler pulley (Fig. 33). The rear discharge model will have the same belt routing.

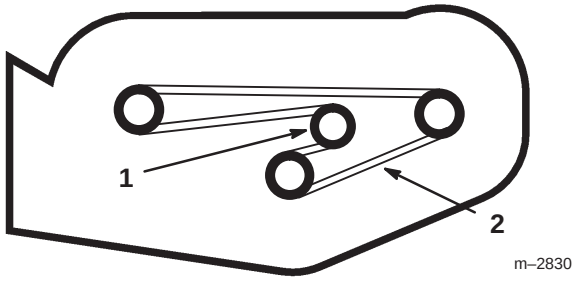

Figure 33

1. Idler
2. Mower belt

2. Install the left and right pulley covers with previously removed mounting screws.
3. Install the mower; refer to Installing the Mower, page 5.

Replacing the Power Take Off (PTO) Belt

PROTOTYPE

Warning

Components around engine will be hot if the machine has been running. Touching hot components can cause burns.

- **Do not touch the engine components or the muffler when hot.**
- **Allow the engine to cool before performing maintenance.**

Note: If desired, remove the hood for better access to the upper pulleys in the pulley box. Refer to Removing the Hood on page 17.

1. Turn the left knob on the front pulley box to loosen the PTO drive belt (Fig. 34).
2. Remove the PTO belt from the clutch pulley (Fig. 34).
3. Remove the PTO belt from the upper pulley and upper idler pulley in the pulley box (Fig. 34).
4. Install the PTO new belt onto the clutch pulley (Fig. 34).
5. Install the PTO belt onto the upper pulley and upper idler pulley in the pulley box (Fig. 34).
6. Turn the left knob on the front pulley box to tighten the PTO drive belt (Fig. 34). There needs to be a 1/2 inch (13 mm) deflection in the belt.

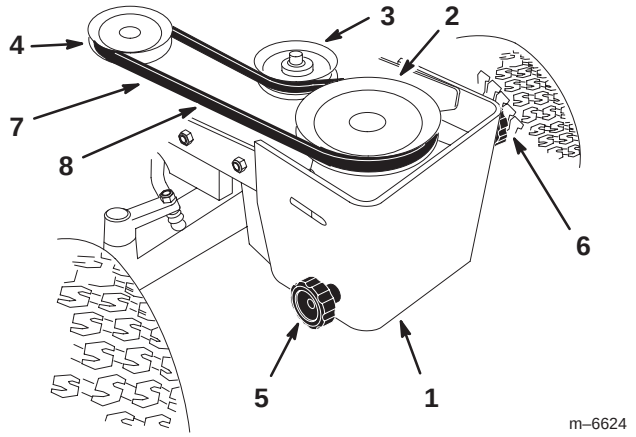

Figure 34

1. Pulley box
2. Upper pulley
3. Upper Idler pulley
4. PTO clutch pulley
5. Right knob
6. Left knob
7. PTO belt
8. Check 1/2 inch deflection here

Replacing the Mower Drive Belt

1. Turn the right knob on the front pulley box to loosen the mower drive belt (Fig. 9).
2. Remove the mower drive belt from the mower center pulley (Fig. 10).
3. Remove the mower drive belt from the lower pulley and the lower idler pulley in the pulley box (Fig. 10).
4. Install the new mower drive belt onto the mower center pulley (Fig. 10). Ensure that it is on the upper center pulley.
5. Install the mower drive belt onto the lower pulley and the lower idler pulley in the pulley box (Fig. 10).
6. Turn the right knob on the front pulley box to adjust the mower drive belt (Fig. 9). There needs to be a 1/2 inch (13 mm) deflection in the belt.

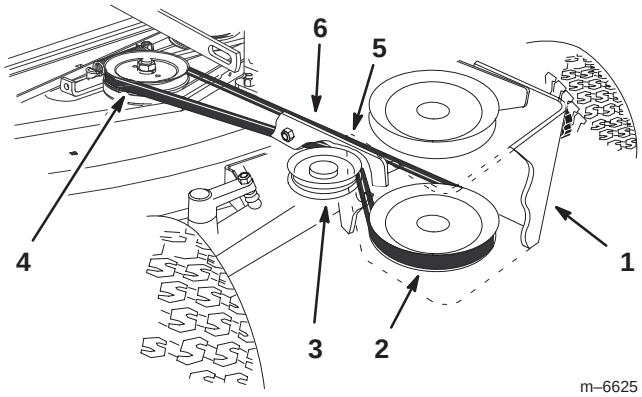

Figure 35

1. Pulley box
2. Lower pulley
3. Lower Idler pulley
4. Mower center pulley
5. Mower drive belt
6. Check 1/2 inch deflection here

Cleaning and Storage

1. Clean dirt and chaff from the outside of the engine's cylinder head fins and blower housing. Also remove grass clippings, dirt, and grime from the external parts of the entire machine, especially the engine, shrouding, and the top of the mower.

Important You can wash the machine with mild detergent and water. Do not pressure wash the machine. Avoid excessive use of water, especially near the control panel, lights, engine, and the battery.

2. Scrape heavy buildup of grass and dirt from the underside of the mower. Then wash the mower with a garden hose.
3. Check the condition of the blade(s); refer to Servicing the Cutting Blades, page 14.
4. Check the condition of all belts.
5. Grease the mower deck; refer to Greasing and Lubrication, page 16.
6. Check and tighten all bolts, nuts, and screws. Repair or replace any part that is damaged or defective.
7. Paint all scratched or bare metal surfaces. Paint is available from your Authorized Service Dealer.
8. Store the machine in a clean, dry garage or storage area. Remove the key from the ignition switch and keep it in a memorable place. Cover the machine to protect it and keep it clean.

PROTOTYPE

Troubleshooting

Problem	Possible Causes	Corrective Action
Abnormal vibration.	1. Cutting blade(s) is bent or unbalanced.	1. Install new cutting blade(s).
	2. Blade mounting bolt is loose.	2. Tighten blade mounting bolt.
	3. Engine mounting bolts are loose.	3. Tighten engine mounting bolts.
	4. Loose engine pulley, idler pulley, or blade pulley.	4. Tighten the appropriate pulley.
	5. Engine pulley is damaged.	5. Contact Authorized Service Dealer.
Blade(s) does not rotate.	1. Blade drive belt is worn, loose or broken.	1. Install new blade drive belt.
	2. Blade drive belt is off pulley.	2. Install blade drive belt and check idler pulley and belt guides for correct position.
	3. PTO belt is worn, loose or broken.	3. Install new PTO belt.
Uneven cutting height.	1. Tire pressure is incorrect.	1. Set tire pressure.
	2. Mower is not level.	2. Level mower from side-to-side and front-to-rear.
	3. Underside of mower is dirty.	3. Clean the underside of the mower.

PROTOTYPE

TORO. Consumer Riding Products

The Toro Total Coverage Guarantee

A Two-Year Full Warranty
(Limited Warranty for Commercial Use)

Conditions and Products Covered

The Toro Company and its affiliate, Toro Warranty Company, pursuant to an agreement between them, jointly promise to repair any Toro Product used for normal residential purposes* if defective in materials or workmanship. The following time periods apply from the date of purchase:

Products	Warranty Period
• All Products and Attachments	2 year full warranty
• 300, 400, and 5xi Series Tractors:	
Frame	5 year full warranty
Front Axle	5 year full warranty
Drive Shaft (5xi Series Only)	5 year full warranty
• All Batteries	1 year full warranty

This warranty covers both the cost of parts and labor, and transportation within a fifteen mile radius of the servicing dealer.

This warranty applies to all consumer riding products and their attachments.

* Normal residential purposes means use of the product on the same lot as your home. Use at more than one location is considered commercial use, and the commercial use warranty would apply.

Limited Warranty for Commercial Use

Toro Consumer Products and attachments used for commercial, institutional, or rental use are warranted against defects in materials or workmanship for the following time periods from the date of purchase:

Products	Warranty Period
• 300, 400, and 5xi Series Tractors:	
Liquid Cooled Gas Engines	1 year limited warranty
Air Cooled Gas and Diesel Engines	2 year limited warranty
All other items	1 year limited warranty
• TimeCutter Models	30 day limited warranty
• All other Riding Products	90 day limited warranty

Instructions for Obtaining Warranty Service

If you think that your Toro Product contains a defect in materials or workmanship, follow this procedure:

1. Contact any Toro Authorized or Master Service Dealer to arrange service at their dealership. To locate a dealer convenient to you, refer to the Yellow Pages of your telephone directory (look under “Lawn Mowers”) or access our website at www.Toro.com. U.S. Customers may also call 800-421-9684 to use our 24-hour Toro dealer locator system.
2. Bring the product and your proof of purchase (sales receipt) to the Service Dealer.

If for any reason you are dissatisfied with the Service Dealer’s analysis or with the assistance provided, contact us at:

Customer Care Department, Consumer Division
Toro Warranty Company
8111 Lyndale Avenue South
Bloomington, MN 55420-1196
800-348-2424 (U.S. customers)
877-484-9255 (Canada customers)

Owner Responsibilities

You must maintain your Toro Product by following the maintenance procedures described in the operator’s manual. Such routine maintenance, whether performed by a dealer or by you, is at your expense.

Items and Conditions Not Covered

There is no other express warranty except for special emission system coverage on some products. This express warranty does not cover:

- Cost of regular maintenance service or parts, such as filters, fuel, lubricants, tune-up parts, blade sharpening, brake and clutch adjustments.
- Any product or part which has been altered or misused or required replacement or repair due to normal wear, accidents, or lack of proper maintenance.
- Repairs necessary due to improper fuel, contaminants in the fuel system, or failure to properly prepare the fuel system prior to any period of non-use over three months.
- Pickup and delivery charges for distances beyond a fifteen mile radius from an Authorized Toro Service Dealer.

All repairs covered by this warranty must be performed by an Authorized Toro Service Dealer using Toro approved replacement parts.

General Conditions

Repair by an Authorized Toro Service Dealer is your sole remedy under this warranty.

Neither The Toro Company nor Toro Warranty Company is liable for indirect, incidental or consequential damages in connection with the use of the Toro Products covered by this warranty, including any cost or expense of providing substitute equipment or service during reasonable periods of malfunction or non-use pending completion of repairs under this warranty.

Some states do not allow exclusions of incidental or consequential damages, or limitations on how long an implied warranty lasts, so the above exclusions and limitations may not apply to you.

This warranty gives you specific legal rights, and you may also have other rights which vary from state to state.

PROTOTYPE

Countries Other than the United States or Canada

Customers who have purchased Toro products exported from the United States or Canada should contact their Toro Distributor (Dealer) to obtain guarantee policies for your country, province, or state. If for any reason you are dissatisfied with your Distributor’s service or have difficulty obtaining guarantee information, contact the Toro importer. If all other remedies fail, you may contact us at Toro Warranty Company.

Part No. 374-0045 Rev. A