Form No. 3328–145

TORO®

27″ Rotary Cutting Deck

Groundsmaster® 3500, 4500/4700 Traction Unit

Model No. 30827—220000001 and Up

PROTOTYPE

Operator’s Manual

English (EN)

Contents

	Page
Introduction	2
Safety	3
Safety and Instruction Decals	3
Specifications	4
General Specifications	4
Dimensions	5
Optional Equipment	5
Setup	6
Loose Parts	6
Adjusting the Carrier Frame (Groundsmaster 3500 only)	6
Adjusting the Height of Cut	6
Adjusting the Roller Scraper	7
Installing the Mulching Baffle (Optional)	7
Operation	8
Operating Tips	8
Maintenance	10
Greasing the Bearings	10
Cutting Deck Service Latch (Groundsmaster 3500–D only)	10
Separating Cutting Decks from Traction Unit	10
Mounting Cutting Decks to Traction Unit	11
Blade Plane	11
Inspecting the Blade Plane	11
Adjusting the Blade Plane	12
Removing the Cutter Blade	12
Inspecting and Sharpening the Blade	12
Blade Stopping Time	13
Servicing the Rear Roller	13
Servicing the Front Roller	14
Cutting Deck Storage	15
The Toro General Commercial Products Warranty	16

Introduction

Read this manual carefully to learn how to operate and maintain your product properly. The information in this manual can help you and others avoid injury and product damage. Although Toro designs and produces safe products, you are responsible for operating the product properly and safely.

Whenever you need service, genuine Toro parts, or additional information, contact an Authorized Service Dealer or Toro Customer Service and have the model and serial numbers of your product ready. The model and serial numbers are stamped into a plate on the rear of the mower deck, under the cover.

Write the product model and serial numbers in the space below:

Model No. _____

Serial No. _____

This manual identifies potential hazards and has special safety messages that help you and others avoid personal injury and even death. ***Danger***, ***Warning***, and ***Caution*** are signal words used to identify the level of hazard. However, regardless of the hazard, be extremely careful.

Danger signals an extreme hazard that *will* cause serious injury or death if you do not follow the recommended precautions.

Warning signals a hazard that *may* cause serious injury or death if you do not follow the recommended precautions.

Caution signals a hazard that may cause minor or moderate injury if you do not follow the recommended precautions.

This manual uses two other words to highlight information. **Important** calls attention to special mechanical information and **Note:** emphasizes general information worthy of special attention.

PROTOTYPE

© 2002 by The Toro Company
8111 Lyndale Avenue South
Bloomington, MN 55420-1196

All Rights Reserved

Printed in the USA

Safety

Safety and Instruction Decals

Safety decals and instructions are easily visible to the operator and are located near any area of potential danger. Replace any decal that is damaged or lost.

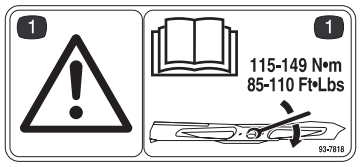

98-7818

1. Warning—torque the blade bolt to 85–110 ft.-lb (115–149 N·m). Read the operator's manual for further instructions.



43-8480

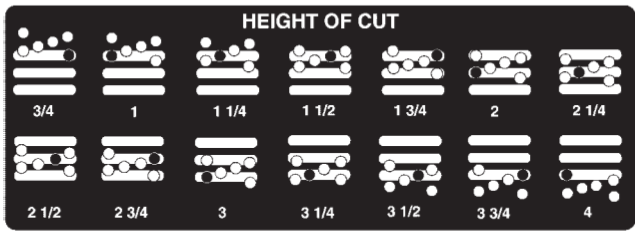

104-1086

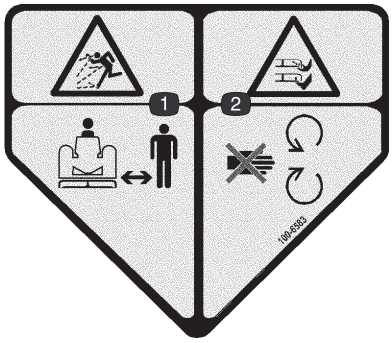

100-6583
(Affix over decal part no. 43–8480 for CE)

1. Thrown object hazard—stay a safe distance from the machine.
2. Cutting/dismemberment hazard of hand or foot, mower blade—stay away from moving parts.



104–4892

PROTOTYPE

Specifications

Note: Specifications and design subject to change without notice.

General Specifications

Chamber Construction	Welded 7 GA (.1793 in.),10 GA (.1345 in.) and 12 GA (.1036 in.) steel. Spindle support is 3/16 in. high-strength steel and 10 GA exterior channels, withstands multiple blade impact tests. Deck frame is welded 1-1/2 in. square tubing and 7 GA (.1793 in.) side supports, protects chamber, withstands collisions.
Blade	27” long, angled sail, heat treated steel
Tip Speed	15,400 ft./min. nominal
Blade Plane (factory pre-set)	Height of Cut 2.00 (5.08 cm) Right or left side 2.15 (5.46 cm) Side to side within .03 in. (.08 cm) of each other Blade rake approximately 5/16 in. (.79 cm)
Height of Cut	3/4–4 in. (1.91–10.16 cm) in 1/4 in. (.64 cm) increments
Deck Drive	Hydraulic, closed loop, integrated relief. High efficiency gear type pump. High efficiency gear type motor. Recommended oil is Mobil DTE 15M (Mobil EAL biodegradable compatible).
Spindles	1-1/4 in. (3.17 cm) shaft, greasable, tapered roller bearing, ductile iron housing which withstands multiple impact tests.
Discharge	Rear, even clipping distribution in wet or dry conditions
Mulching Baffle (Optional)	Pre-drilled mounting holes provided in decks
Front Rollers	Two 5 in. (12.7 cm) diameter, ductile iron w/hollow core, sealed bearings, close location to blade
Rear Roller	One 3 in. (7.6 cm) diameter, steel, sealed bearings, exterior shaft seal, full length, close location to blade
Anti-Scalp Cup	6 in. (15.2 cm) standard
Roller Scraper	Welded straight edge and 5/16 in. (.79 cm) diameter rod; located at centerline for self cleaning
Suspension	Non-steering carrier frame
Weight	210 lb. (95 kg)

PROTOTYPE

Dimensions

Overall length	34 in. (86.4 cm)
Overall width	34 in. (86.4 cm)
Overall height	9.6 in. (24.4 cm) to carrier mount 10-1/2 in. (26.7 cm) at 3/4 in. height of cut 13-3/4 in. (34.9 cm) at 4 in. height of cut
Roller footprint	
Front to back	29.5 in. (74.9 cm)
Rear roller	29.8 in. (75.7 cm) full length
Front rollers	18.5 in. (47 cm) between front rollers

Optional Equipment

Mulching Baffle Kit (contains parts for one deck)	Model No. 30828
High Lift Blade	Part No. 105–4089

PROTOTYPE

Setup

Note: Determine the left and right sides of the machine from the normal operating position.

Loose Parts

Note: Use this chart as a checklist to ensure that all parts have been received. Without these parts, total setup cannot be completed.

Description	Qty.	Use
Decal	1	Apply to cutting deck for CE
Parts Catalog	1	
Operator's Manual	1	Read before operating the machine.
Registration Card	1	Fill out and return to Toro.

Adjusting the Carrier Frame (Groundsmaster 3500 only)

The front and rear cutting decks require different mounting positions.

The front cutting deck has two mounting positions depending on what height-of-cut and degree of deck rotation is desired. The rear cutting deck has one mounting position for proper alignment with the sidewinder under frame.

Front Cutting Decks

1. For heights of cut in the 3/4 to 3 inch range, the front carrier frames should be mounted in the lower front mounting holes (Fig. 1).

Note: This permits more up travel of the cutting decks relative to tractor when approaching quick uphill changes in terrain. It does however limit the clearance of the chamber to carrier when cresting sharp knolls.

2. For heights of cut in the 2–1/2 to 4 inch range, the front carrier frames should be mounted in the upper front mounting holes (Fig. 1).

Note: This increases the chamber to carrier clearance due to the higher position of the cutting chamber, but will cause the cutting deck to reach their maximum up travel sooner.

Rear Cutting Decks

For all heights of cut, the rear cutting deck should be mounted in the rear mounting holes (Fig. 1).

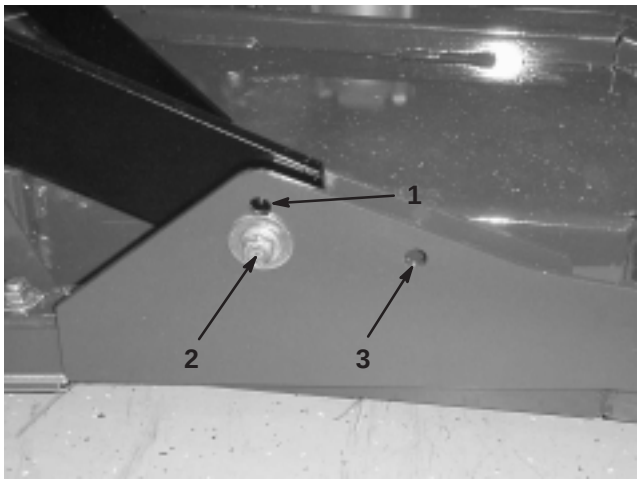

Figure 1

1. Front deck mounting hole (upper)
2. Front deck mounting hole (lower)
3. Rear deck mounting hole

PROTOTYPE

Adjusting the Height of Cut

Important This cutting deck often cuts approximately 1/4 inch lower than a reel cutting unit with the same bench setting. It may be necessary to have these rotary cutting deck's bench set 1/4 inch above that of reels cutting in the same area.

Important Access to the rear cutting units is greatly improved by removing the cutting unit from the tractor. If the unit is equipped with a Sidewinder,® sidewind the cutting units to the right, remove the rear cutting unit, and slide it out to the right side.

1. Lower cutting deck to ground, stop engine, and remove key from ignition switch.

2. Loosen capscrew securing each height of cut bracket to height of cut plate (front and each side) (Fig. 2).

3. Beginning with front adjustment, remove capscrew.

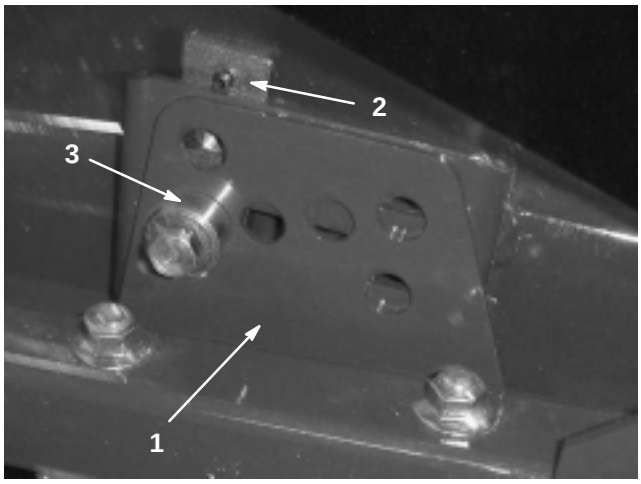

Figure 2

1. Height of cut bracket
2. Height of cut plate
3. Spacer

4. While supporting chamber, remove spacer (Fig. 2).

5. Move chamber to desired height-of-cut and install spacer into designated height-of-cut hole and slot (Fig. 3).

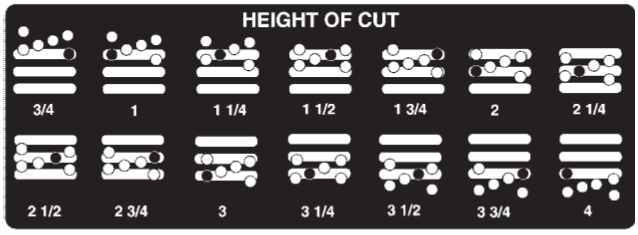

Figure 3

6. Position tapped plate in line with spacer.

7. Install capscrew finger tight.

8. Repeat steps 4–7 for each side adjustment.

9. Tighten all three capscrews to 30 ft.-lb. (41 N·m).

Note: Adjustments of more than 1-1/2 inch may require temporary assembly to an intermediate height to prevent binding (e.g. changing from 1.25 in. to 2.75 in. height-of-cut).

Adjusting the Roller Scraper

The rear roller scraper is designed to work best when there is an even gap of .020–.040 inches between the scraper and roller.

1. Loosen the top 2 mounting screws and the lower 2 flange nuts (Fig. 4).

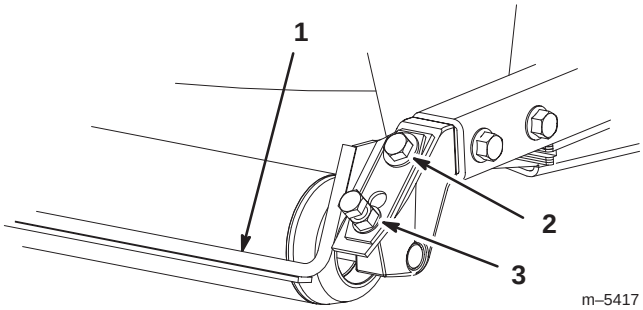

Figure 4

1. Roller scraper
2. Mounting screw
3. Flange nut

2. Slide the scraper up or down until a gap of .020–.040 in. is achieved between the rod and the roller.

3. Secure the mounting screws and flange nuts to 30 ft.-lb. (41 N·m) in an alternating sequence.

Installing the Mulching Baffle (Optional)

1. Thoroughly clean debris from mounting holes on rear wall and left side wall of chamber.

2. Install mulching baffle in rear opening and secure with 5 flange head screws (Fig. 5).

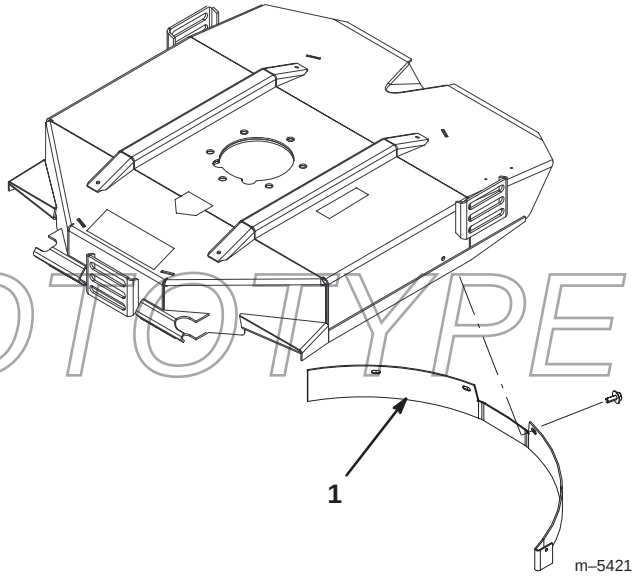

Figure 5

1. Mulching baffle

3. Verify that mulching baffle does not interfere with either tip of blade and does not protrude inside the surface of the rear chamber wall.

PROTOTYPE

Operation

Note: Determine the left and right sides of the machine from the normal operating position.

Operating Tips

Blade Selection

Standard Angled Sail

The blade generally performs best in lower heights of cut (3/4 to 2–1/2 inch). The optional high lift parallel sail blade performs better in the higher heights of cut (2 to 4 inch).

Attributes:

- Discharge remains more even at lower heights of cut.
- Discharge has less tendency to throw left and thus a cleaner look around bunkers and fairways.
- Lower power requirement at lower heights and dense turf.

High Lift Parallel Sail

The blade generally performs better in the higher heights of cut (2 to 4 inch).

Attributes:

- More lift and higher discharge velocity.
- Sparse or limp turf is picked up significantly at higher heights of cut.
- Wet or sticky clippings are discharged more efficiently reducing congestion in deck.
- Requires more horsepower to run.
- Tends to discharge further left and can tend to windrow at lower heights of cut.

Mow When Grass is Dry

Mow either in the late morning to avoid the dew, which causes grass clumping, or in late afternoon to avoid the damage that can be caused by direct sunlight on the sensitive, freshly mowed grass.

Select the Proper Height-of-Cut Setting to Suit Conditions

Remove approximately one inch or no more than 1/3 of the grass blade when cutting. In exceptionally lush and dense grass you may have to raise your height–of–cut setting another notch.

PROTOTYPE

Always Start Mowing with Sharp Blades

A sharp blade cuts cleanly and without tearing or shredding the grass blades like a dull blade. Tearing and shredding causes the grass to turn brown at the edges which impairs growth and increases susceptibility to diseases. Make sure blade is in good condition and a full sail is present.

Check Condition of Deck

Make sure cutting chambers are in good condition. Straighten any bends in chamber components to assure correct blade tip/chamber clearance.

After Operating

To ensure optimum performance, clean underside of mower housing. If residue is allowed to build up in mower housing, cutting performance will decrease.

PROTOTYPE

Maintenance

Note: Determine the left and right sides of the machine from the normal operating position.

Caution

If you leave the key in the ignition switch, someone could accidently start the engine and seriously injure you or other bystanders.

Remove the key from the ignition and disconnect the wire from the spark plug before you do any maintenance. Set the wire aside so that it does not accidentally contact the spark plug.

Greasing the Bearings

Each cutting deck has two grease fittings per spindle. Either fitting can be used, which ever is more accessible. If machine is operated under normal conditions, lubricate blade spindle bearings (Fig. 6) with No. 2 general purpose lithium base grease or molybdenum base grease, after every 50 hours of operation. Pump grease into fitting until a small amount appears at bottom of spindle housing (under deck).

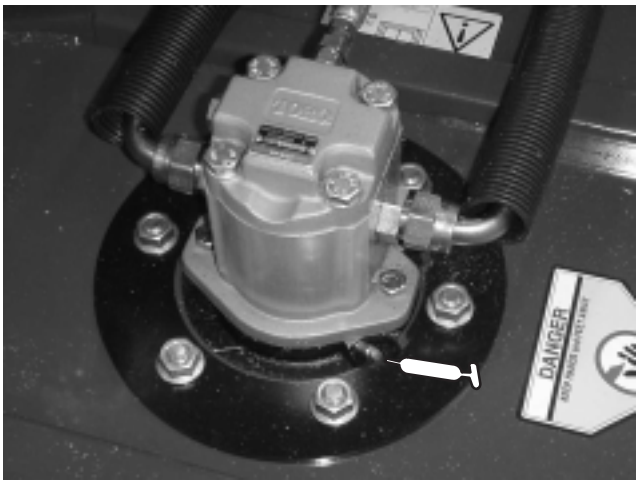

Figure 6

Cutting Deck Service Latch

Groundsmaster 3500–D only

When servicing cutting decks, use the service latch to prevent injury.

1. Center cutting deck sidewinder with the traction unit.
2. Raise cutting decks to transport position.
3. Set parking brake and turn off machine.
4. Release latch rod (Fig. 7) from front carrier frame retainer.

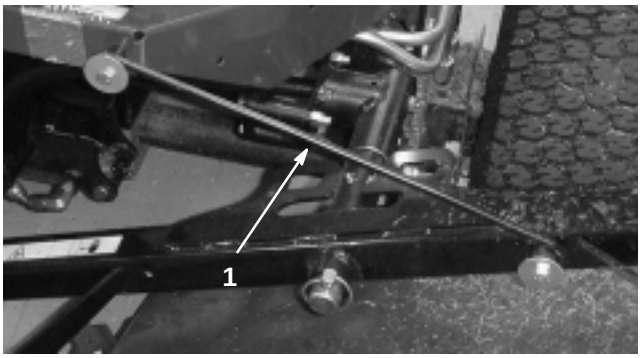

Figure 7

1. Service latch hook

5. Lift outside of front cutting decks and place latch over frame pin mounted on front of operators platform (Fig. 7).
6. Sit on operator seat and start traction unit.
7. Lower cutting decks to mow position.
8. Turn off machine and remove key.
9. Reverse procedure to unlatch cutting decks.

PROTOTYPE

Separating the Cutting Decks from the Traction Unit

1. Position machine on level surface, lower cutting decks to floor, shut engine off, and engage parking brake.
2. Disconnect and remove hydraulic motor from deck (Fig. 8). Cover top of spindle to prevent contamination.

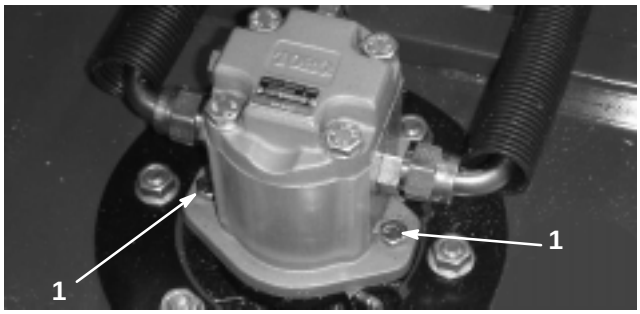

Figure 8

1. Motor mounting screws

3. Remove lynch pin or retaining nut (GM4700 only) securing deck carrier frame to lift arm pivot pin (Fig. 9).

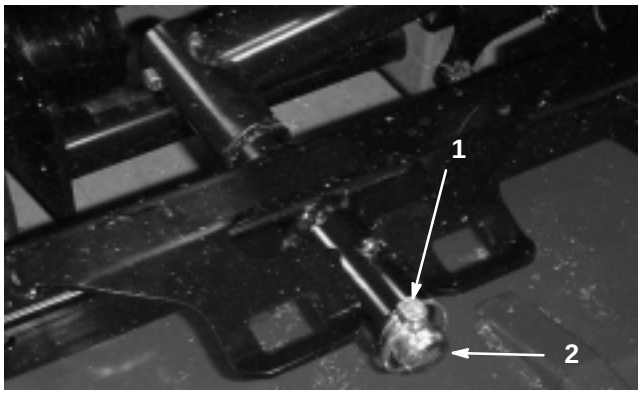

Figure 9

1. Lynch pin
2. Lift arm pivot pin

4. Roll the cutting deck away from the traction unit.

Mounting the Cutting Decks to the Traction Unit

1. Position machine on a level surface and shut engine off.

2. Move cutting deck into position in front of traction unit.

3. Slide deck carrier frame onto lift arm pivot pin. Secure with lynch pin or retaining nut (GM 4700 only) (Fig. 9).

4. Install hydraulic motor to deck (Fig. 8). Make sure O-ring is in position and not damaged.

5. Grease spindle.

Blade Plane

The rotary deck comes from the factory preset at 2.00 inch height-of-cut and blade rake of 0.310 inch. The left-hand and right-hand heights are also preset to within ±0.030 inch of the other.

The cutting deck is designed to withstand blade impacts without deformation of the chamber. If a solid object is struck, inspect the blade for damage and blade plane for accuracy.

Inspecting the Blade Plane

1. Remove hydraulic motor from cutting deck and remove cutting deck from tractor.

2. Use hoist (or minimum of two people) and place cutting deck on flat table.

3. Mark one end of blade with paint pen or marker. Use this end of blade to check all heights.

4. Position cutting edge of marked end of blade at 12 o'clock (straight ahead in direction of mowing) (Fig. 10) and measure height from table to cutting edge of blade.

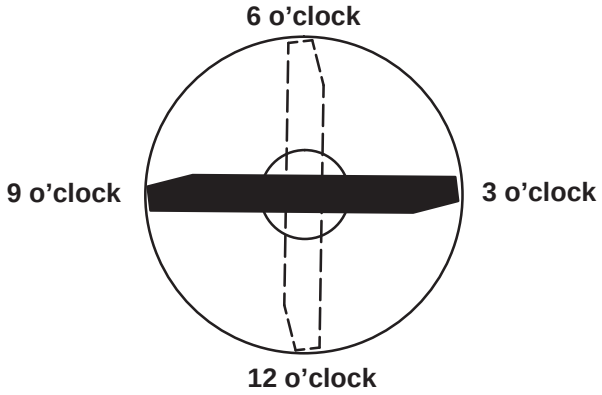

Figure 10

5. Rotate marked end of blade to the 3 and 9 o'clock positions (Fig. 10) and measure heights.

6. Compare 12 o'clock measured height to the height of cut setting. It should be within .030 inch. The 3 and 9 o'clock heights should be .150±.030 inch higher than the 12 o'clock setting and within .030 in. of each other.

If any of these measurements are not within specification, proceed to Adjusting the Blade Plane, page 12.

PROTOTYPE

Adjusting the Blade Plane

Start with front adjustment (change one bracket at a time).

1. Remove height-of-cut bracket, (front, left, or right) from deck frame (Fig. 11).
2. Adjust .060 in. shims and/or .030 in. shim between the deck frame and bracket to achieve the desired height setting (Fig. 11).

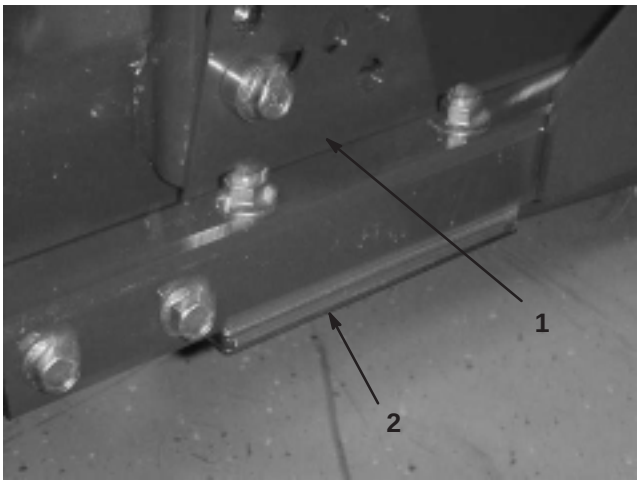

Figure 11

1. Height of cut bracket
2. Shims

3. Install height-of-cut bracket to deck frame with remaining shims assembled below the height-of-cut bracket.
4. Secure socket head bolt/spacer and flange nut.

Note: Socket head bolt/spacer are held together with Loctite to prevent spacer from falling inside the deck frame.

5. Verify 12 o'clock height and adjust if needed.
6. Determine if only one or both (right-hand and left-hand) height-of-cut brackets need to be adjusted. If the 3 or 9 o'clock side is .150±.030 in. higher than the new front height then no adjustment is needed for that side. Adjust other side to within ±.030 in. of correct side.
7. Adjust right and/or left height-of-cut brackets by repeating steps 1 thru 3.
8. Secure carriage bolts and flange nuts.
9. Again, verify 12, 3, and 9 o'clock heights.

Removing the Cutter Blade

The blade must be replaced if a solid object is hit, the blade is out of balance or if the blade is bent. Always use genuine Toro replacement blades to be sure of safety and optimum performance. Never use replacement blades made by other manufacturers because they could be dangerous.

1. Raise cutting deck to highest position, shut the engine off, and engage the parking brake. Block cutting deck to prevent it from falling accidentally.
2. Grasp end of blade using a rag or thickly padded glove. Remove blade bolt, anti-scalp cup, and blade from spindle shaft (Fig. 12).

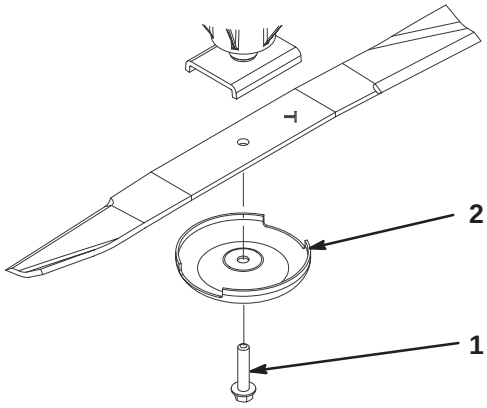

Figure 12

1. Blade bolt
2. Anti-scalp cup

3. Install blade, sail facing toward cutting deck, with anti-scalp cup and blade bolt (Fig. 12). Tighten blade bolt to 85–110 ft.-lb. (115–149 N·m).

Danger

A worn or damaged blade can break, and a piece of the blade could be thrown into the operator's or bystander's area, resulting in serious personal injury or death.

- **Inspect the blade periodically for wear or damage.**
- **Never weld a broken or cracked blade.**
- **Always replace a worn or damaged blade.**

PROTOTYPE

Inspecting and Sharpening the Blade

1. Raise cutting deck to highest position, shut the engine off, and engage the parking brake. Block cutting deck to prevent it from falling accidentally. On GR 3500, secure cutting deck service latch.

2. Examine cutting ends of the blade carefully, especially where the flat and curved parts of the blade meet (Fig. 13-A). Since sand and abrasive material can wear away the metal that connects the flat and curved parts of the blade, check the blade before using the machine. If wear is noticed (Fig. 13-B), replace the blade; refer to Removing the Cutter Blade, page 12.

Danger

If the blade is allowed to wear, a slot will form between the sail and flat part of the blade (Fig. 13-C). eventually a piece of the blade may break off and be thrown from under the housing, possibly resulting in serious injury to yourself or bystanders.

- **Inspect the blade periodically for wear or damage.**
- **Always replace a worn or damaged blade.**

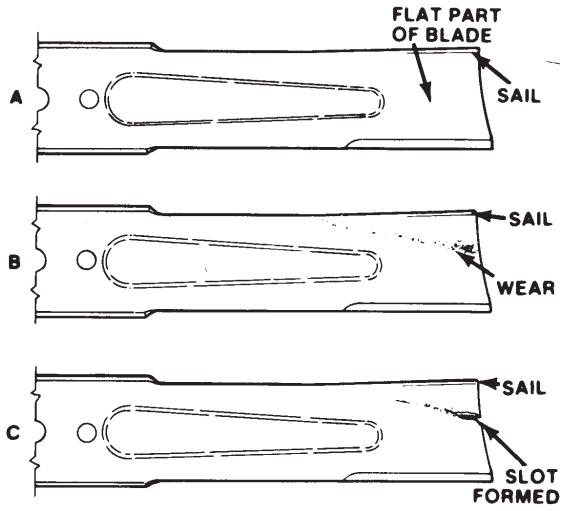

Figure 13

3. Inspect cutting edges of all blades. Sharpen the cutting edges if they are dull or nicked. Sharpen only the top of the cutting edge and maintain the original cutting angle to make sure of sharpness (Fig. 14). The blade will remain balanced if same amount of metal is removed from both cutting edges.

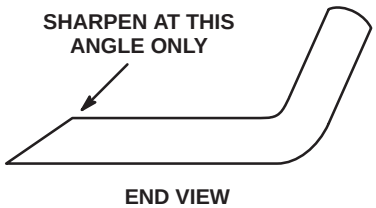

Figure 14

4. To check blade for being straight and parallel, lay blade on a level surface and check its ends. Ends of blade must be slightly lower than the center, and cutting edge must be lower than the heel of the blade. This blade will produce good quality of cut and require minimal power from the engine. By contrast a blade that is higher at the ends than the center, or if cutting edge is higher than the heel, the blade is bent or warped and must be replaced.
5. Install blade, sail facing toward cutting deck, with anti-scalp cup and blade bolt. Tighten blade bolt to 85–110 ft.-lb. (115–149 N·m).

Blade Stopping Time

The blades of the cutting deck are to come to a complete stop in approximately 5 seconds after the cutting deck engagement switch is shut down.

Note: Make sure the decks are lowered onto a clean section of turf or hard surface to avoid thrown dust and debris.

To verify this stopping time, have a second person stand back from the deck at least 20 feet and watch the blades on one of the cutting decks. Have the operator shut the cutting decks down and record the time it takes for the blades to come to a complete stop. If this time is greater than 7 seconds, the braking valve needs adjustment. Call your Toro Distributor for assistance in making this adjustment.

Servicing the Rear Roller

Disassembly

1. Remove mounting screws and nuts securing the scraper to roller mounts (Fig. 15). Remove scraper and plates.
2. Remove mounting screws securing roller mounts to rear of deck frame (Fig. 15). Remove roller mounts.
3. Remove the lower screws securing each end of roller to roller mounts (Fig. 15).

PROTOTYPE

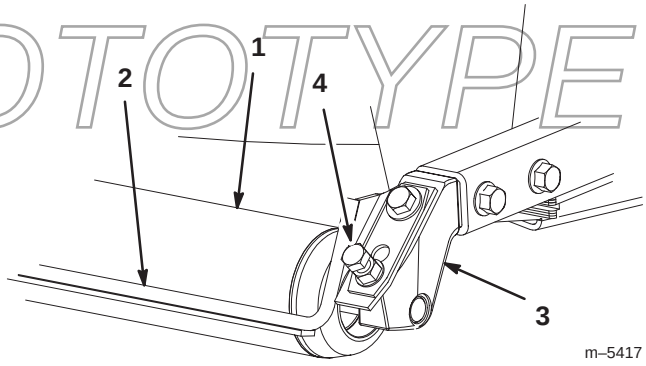

Figure 15

1. Rear roller
2. Scraper
3. Roller mount
4. Lower screw

Seal Removal

Using a 1/4 in. thick, 3 in. x 3 in. square piece of steel and the following specifications, make a seal removal tool (Fig. 16).

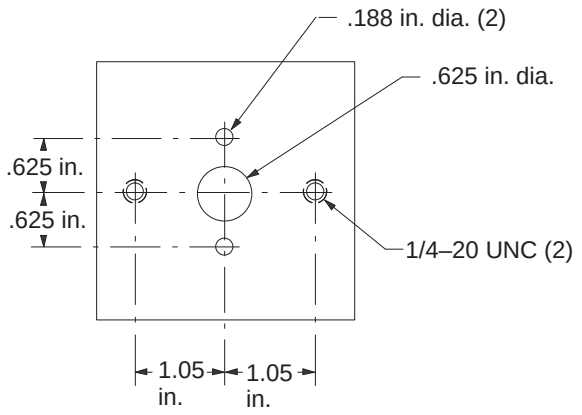

Figure 16

---

1. Slide seal tool over roller shaft.
2. Using the tool as a template, locate, mark, and drill 2 holes (7/64 in. [.109 in.] diameter) in outer face of seal.
3. Screw 2 self-tapping screws (No. 8 [.164 in.] x 3/4 in.) into outer face of seal.
4. Install 2 capscrews (1/4 x 1 in.) into seal tool.

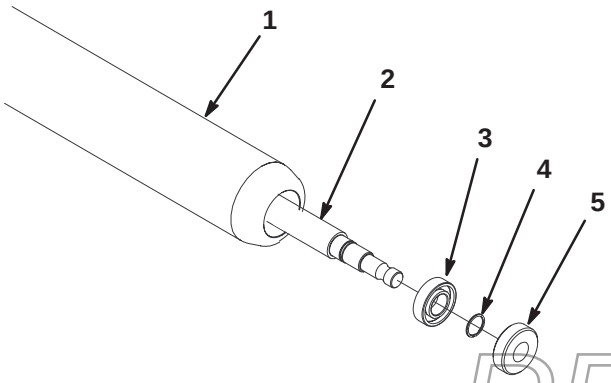

Figure 17

1. Roller
2. Roller shaft
3. Ball bearing
4. Retaining ring
5. Oil seal

---

5. Alternate tightening sequence of 1/4 in. capscrews to pull seal out of housing.

Note: Seal will be destroyed when servicing the rear roller. Do not attempt to re-use these seals.

Bearing Removal

Reference: The bearings are pressed on to the shaft (.0003–.0016 in. interference) and loose fit to housing (.0020–.0035 in. clearance).

1. Remove retaining ring (Fig. 17). Repeat on other end.
2. Loosely secure roller assembly in bench vise and lightly tap one end of roller shaft until free from housing.
3. Remove second bearing from shaft. Support bearing on inner race and tap on roller shaft.
4. Inspect bearings, shaft, and retaining ring for damage. Replace damaged components. Re-assemble roller.

Assembly

1. Press bearing onto one end of shaft. Apply pressure to inner race only.
2. Install spiral retaining ring on same end as assembled bearing.
3. Install shaft with single bearing into tube assembly.
4. Install second bearing into roller assembly. Press only on inner race. The inner race will contact shoulder of shaft before outer race contacts shoulder of housing.
5. Install second spiral retaining ring.
6. Press new seal flush to .030 in. recessed into housing. Repeat for other side.

Servicing the Front Roller

Disassembly

1. Remove roller mounting bolt (Fig. 18).
2. Insert punch through end of roller housing and drive opposite bearing out by alternating taps to opposite side of inner bearing race. There should be a 1/16 in. (.060 in.) lip of inner race exposed.

PROTOTYPE

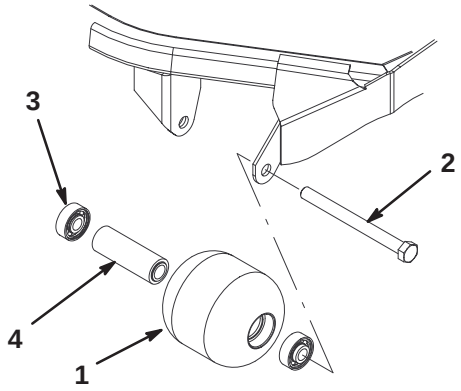

Figure 18

1. Front roller
2. Mounting bolt
3. Bearing
4. Bearing spacer

3. Push second bearing out in press.

4. Inspect roller housing, bearings, and bearing spacer for damage (Fig. 18). Replace damaged components and re-assemble.

Assembly

1. Press first bearing into roller housing (Fig. 18). Press on outer race only or equally on inner and outer race.

2. Insert spacer (Fig. 18).

3. Press second bearing into roller housing (Fig. 18) pressing equally on inner and outer race until the inner race comes in contact with spacer.

4. Install roller assembly into deck frame.

Important Securing roller assembly with a gap larger than .060 in. creates a side load on bearing and can lead to premature bearing failure.

5. Verify that there is no more than a .060 in. gap between roller assembly and the roller mount brackets of the deck frame. If there is a gap over .060 in., install enough 5/8 in. diameter washers to take up the slop.

6. Secure mounting bolt to 80 ft.-lb. (108 N·m).

Cutting Deck Storage

If cutting deck is separated from traction unit for any length of time, install spindle plug (94-2703) in top of spindle to protect spindle from dust and water.

PROTOTYPE

The Toro General Commercial Products Warranty

A Two-Year Limited Warranty

Conditions and Products Covered

The Toro Company and its affiliate, Toro Warranty Company, pursuant to an agreement between them, jointly warrant your 1996 or newer Toro Commercial Product ("Product") purchased after January 1, 1997, to be free from defects in materials or workmanship for two years or 1500 operational hours*, whichever occurs first. Where a warrantable condition exists, we will repair the Product at no cost to you including diagnosis, labor, parts, and transportation. This warranty begins on the date the Product is delivered to the original retail purchaser.

* Product equipped with hour meter

Instructions for Obtaining Warranty Service

You are responsible for notifying the Commercial Products Distributor or Authorized Commercial Products Dealer from whom you purchased the Product as soon as you believe a warrantable condition exists.

If you need help locating a Commercial Products Distributor or Authorized Dealer, or if you have questions regarding your warranty rights or responsibilities, you may contact us at:

Toro Commercial Products Service Department
Toro Warranty Company
8111 Lyndale Avenue South
Bloomington, MN 55420-1196
952-888-8801 or 800-982-2740
E-mail: commercial.service@toro.com

Owner Responsibilities

As the Product owner, you are responsible for required maintenance and adjustments stated in your operator's manual. Failure to perform required maintenance and adjustments can be grounds for disallowing a warranty claim.

Items and Conditions Not Covered

Not all product failures or malfunctions that occur during the warranty period are defects in materials or workmanship. This express warranty does not cover the following:

- Product failures which result from the use of non-Toro replacement parts, or from installation and use of add-on, modified, or unapproved accessories
- Product failures which result from failure to perform required maintenance and/or adjustments
- Product failures which result from operating the Product in an abusive, negligent or reckless manner
- Parts subject to consumption through use unless found to be defective. Examples of parts which are consumed, or used up, during normal Product operation include, but are not limited to, blades, reels, bedknives, tines, spark plugs, castor wheels, tires, filters, belts, etc.
- Failures caused by outside influence. Items considered to be outside influence include, but are not limited to, weather, storage practices, contamination, use of unapproved coolants, lubricants, additives, or chemicals, etc.
- Normal "wear and tear" items. Normal "wear and tear" includes, but is not limited to, damage to seats due to wear or abrasion, worn painted surfaces, scratched decals or windows, etc.

Parts

Parts scheduled for replacement as required maintenance are warranted for the period of time up to the scheduled replacement time for that part.

Parts replaced under this warranty become the property of Toro. Toro will make the final decision whether to repair any existing part or assembly or replace it. Toro may use factory remanufactured parts rather than new parts for some warranty repairs.

General Conditions

Repair by an Authorized Toro Distributor or Dealer is your sole remedy under this warranty.

Neither The Toro Company nor Toro Warranty Company is liable for indirect, incidental or consequential damages in connection with the use of the Toro Products covered by this warranty, including any cost or expense of providing substitute equipment or service during reasonable periods of malfunction or non-use pending completion of repairs under this warranty. Except for the Emissions warranty referenced below, if applicable, there is no other express warranty. All implied warranties of merchantability and fitness for use are limited to the duration of this express warranty.

Some states do not allow exclusions of incidental or consequential damages, or limitations on how long an implied warranty lasts, so the above exclusions and limitations may not apply to you.

This warranty gives you specific legal rights, and you may also have other rights which vary from state to state.

Note regarding engine warranty: The Emissions Control System on your Product may be covered by a separate warranty meeting requirements established by the U.S. Environmental Protection Agency (EPA) and/or the California Air Resources Board (CARB). The hour limitations set forth above do not apply to the Emissions Control System Warranty. Refer to the Engine Emission Control Warranty Statement printed in your operator's manual or contained in the engine manufacturer's documentation for details.

PROTOTYPE

Countries Other than the United States or Canada

Customers who have purchased Toro products exported from the United States or Canada should contact their Toro Distributor (Dealer) to obtain guarantee policies for your country, province, or state. If for any reason you are dissatisfied with your Distributor's service or have difficulty obtaining guarantee information, contact the Toro importer. If all other remedies fail, you may contact us at Toro Warranty Company.

Part No. 374-0031 Rev. –