Form No. 3328-177

13-32
Rear Engine Rider
Model No. 70125—Serial No. 220000001 and Up
Model No. 70184—Serial No. 220000001 and Up

Setup Instructions

Loose Parts

Description	Qty.	Use
Wheel	2	Installing the front wheels
Flat washer	4	
Cotter pin	2	
Seat	1	Installing the seat
Screw, M8 x 18 mm	4	
Flat washer, M9	4	
Lock washer	4	
Socket pin	1	Attaching the steering wheel
Engine cover	1	Installing the engine cover
Screw, M6 x 25 mm	2	
Frame	1	Assembling the grass collector
Fabric bag with clips	1	
Handle	1	
Locknut, M8	2	
Washer, M9	4	
Z-bracket	2	Installing the grass collector
Bolt, M6 x 16.2 mm	2	
Nut, M6	2	
Grass collector cover	1	
Pin	2	
Full bag lever	1	
Bolt, M6	2	Installing the battery
Flat washer, M6.5	4	
Nut, M6	2	
Recycler® cover	1	Recycling grass clippings; refer to the tractor *Operator's Manual*
Draining funnel	1	Draining the engine oil
Key	2	Use in ignition and KeyChoice® switches
Operator's Manual	1	Read before operating the machine.
Engine operator's manual	1	

PROTOTYPE

© 2002 by The Toro Company
8111 Lyndale Avenue South
Bloomington, MN 55420-1196

All Rights Reserved
Printed in Italy

Assembling the Tractor

Installing the Front Wheels

1. Slide a flat washer onto each spindle (Fig. 1).
2. Mount the wheels and secure them with a flat washer and cotter pin (Fig. 1).
3. Grease the wheels.

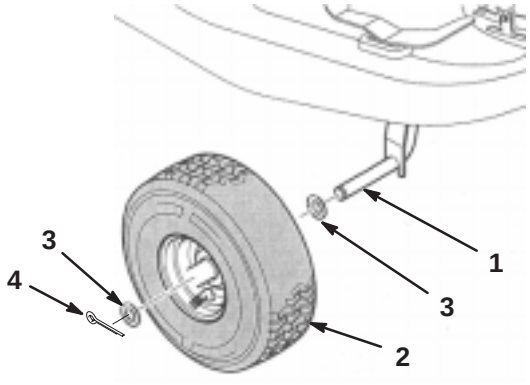

Figure 1

1. Spindle
2. Wheel
3. Flat washer
4. Cotter pin

Installing the Seat

Attach the seat to the support plate with 4 flat washers (M9), lock washers, and screws (M8 x 18 mm) (Fig. 2).

Note: Before tightening the screws, adjust the position of the seat according to the user's needs.

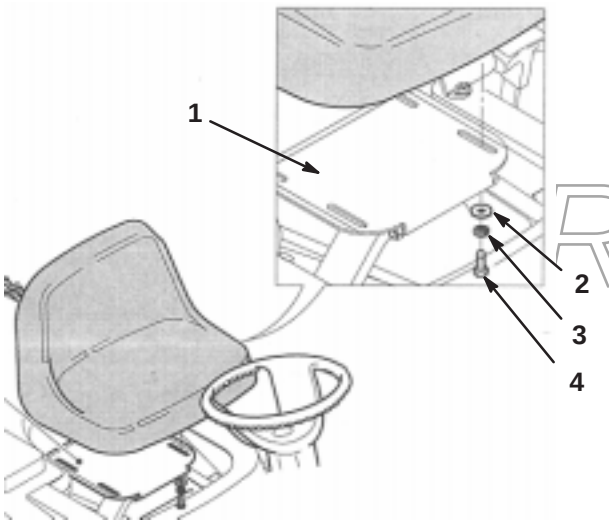

Figure 2

1. Seat Support plate
2. Flat washer, M9
3. Lock washer
4. Screw, M8 x 18 mm

Attaching the Steering Wheel

1. Rotate the steering wheel up until it is aligned with the steering column.
2. Secure the steering wheel with the socket pin (Fig. 3).

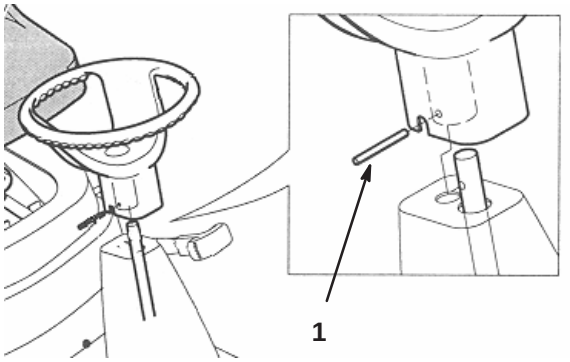

Figure 3

1. Socket pin

Installing the Engine Cover

1. Slide the tabs on the engine cover into the slots on the body of the tractor (Fig. 4).
2. Secure the cover with 2 screws (M6 x 25 mm) (Fig. 4).

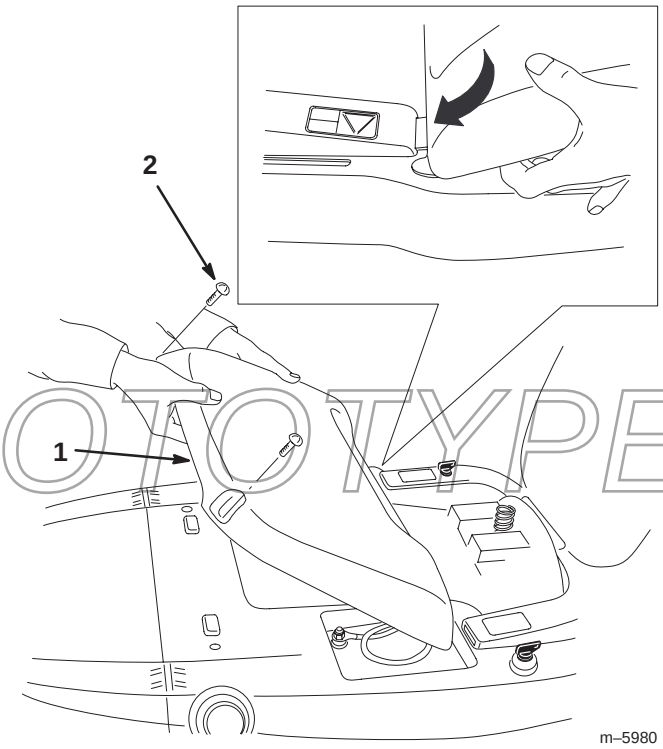

Figure 4

1. Engine cover
2. Screw

PROTOTYPE

Assembling the Grass Collector

1. Slide the bag onto the frame and secure it with the clips (Fig. 5).

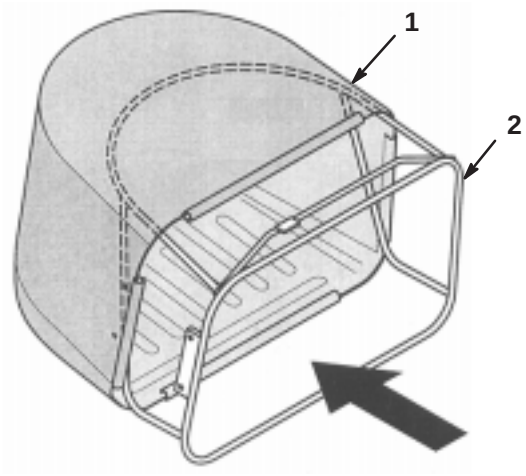

Figure 5

3. Bag
4. Frame

2. Secure the handle to the bag assembly with 4 washers (M9) and 2 locknuts (M8) (Fig. 6).

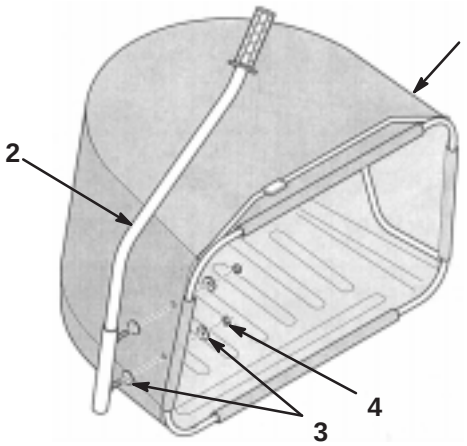

Figure 6

1. Bag assembly
2. Handle
3. Washer, M9
4. Locknut, M8

Installing the Grass Collector

1. Reach beneath the rear of the tractor and hold the full bag switch and switch plate while removing the 2 screws on the rear panel (Fig. 7).

2. Hold the switch plate against the switch and slide the full bag lever into the rectangular slot on the rear panel of the tractor. Hook the switch plate onto the lever (Fig. 7).

3. Secure the switch and switch plate to the rear panel with the 2 screws (Fig. 7).

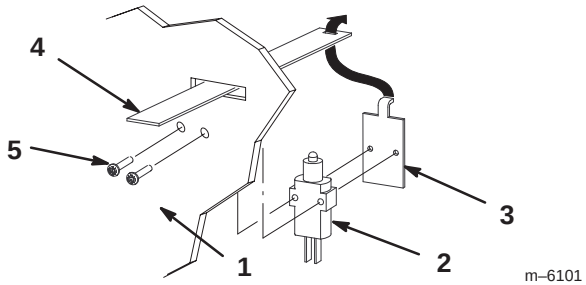

Figure 7

1. Rear panel
2. Switch
3. Switch plate
4. Full bag lever
5. Screw

4. Attach the grass collector to the rear of the tractor with 2 Z-brackets, bolts (M6 x 16.2 mm), and nuts (M6) (Fig. 8).

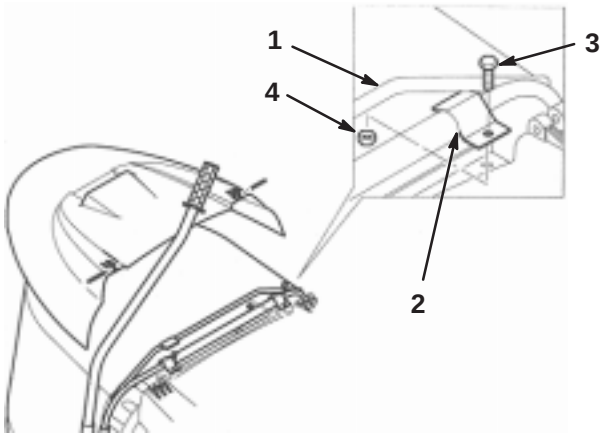

Figure 8

1. Grass collector
2. Z–bracket
3. Bolt, M6 x 16.2 mm
4. Nut, M6

5. Attach the grass collector cover to the tractor with 2 pins (Fig. 9).

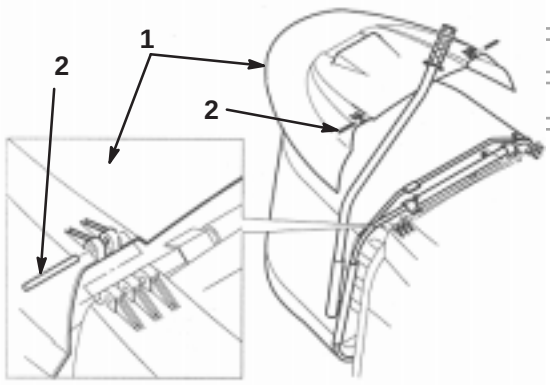

Figure 9

1. Grass collector cover
2. Pin

PRO

Activating the Battery

Bulk electrolyte with 1.260 specific gravity must be purchased from a local battery supply outlet.

Danger

Battery electrolyte contains sulfuric acid which is a deadly poison and causes severe burns.

- **Do not drink electrolyte and avoid contact with skin, eyes or clothing. Wear safety glasses to shield your eyes and robber gloves to protect your hands.**
- **Fill the battery where clean water is always available for flushing the skin.**
- **Follow all instructions and comply with all safety messages on the electrolyte container.**

1. Remove the battery from the machine and place it on a level surface; refer to the Operator's Manual, Removing the Battery.

Important Never fill the battery with electrolyte while the battery is installed in the tractor. Electrolyte could be spilled on other parts and cause corrosion.

2. Clean the top of the battery with a paper towel.
3. Remove the vent caps from the battery (Fig. 10). Slowly pour electrolyte into each battery cell until the electrolyte level is up to the Upper line on the battery case (Fig. 10).

Important Do not overfill the battery because electrolyte (sulfuric acid) can cause severe corrosion and damage to the chassis.

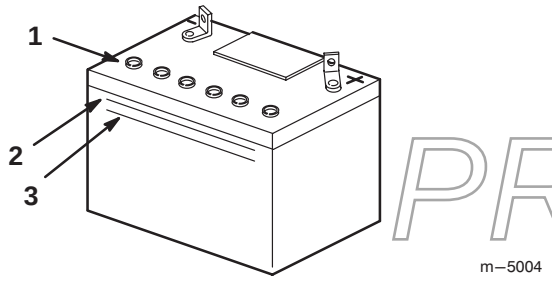

Figure 10

1. Vent caps
2. Upper line
3. Lower line

4. Wait five to ten minutes after filling the battery cells. Add electrolyte, if necessary, until the electrolyte level is up to the Upper line (Fig. 10) on the battery case.
5. Install the battery vent caps.
6. Charge the battery for 1 hour at 25 to 30 amps or 6 hours at 4 to 6 amps. Do not overcharge the battery.

Warning

Charging the battery produces gasses that can explode.

Never smoke near the battery and keep sparks and flames away from battery.

7. When the battery is fully charged, unplug the charger from the electrical outlet, then disconnect the charger leads from the battery posts (Fig. 11).
8. Install the battery in the tractor and connect the battery cables; refer to Installing the Battery in the tractor *Operator's Manual*.

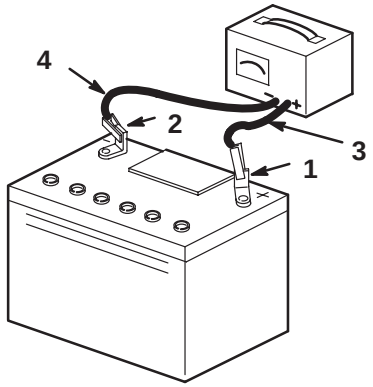

Figure 11

1. Positive post
2. Negative post
3. Charger red (+) wire
4. Charger black (–) wire

Checking the Engine Oil Level

Before you start the engine and use the machine, check the oil level in the engine crankcase; refer to Checking the Oil Level in the tractor *Operator's Manual*.

PROTOTYPE

Filling the Fuel Tank

Add fuel to the fuel tank; refer to Filling the Fuel Tank in the tractor *Operator's Manual*.

Checking the Tire Pressure

Check the front and rear tires for proper inflation; refer to Checking the Tire Pressure in the tractor *Operator's Manual*.

Testing the Safety System

Test the safety interlock system; refer to The Safety Interlock System in the tractor *Operator's Manual*.