Form No. 3328-187

High-Output Alternator Kit

Twister Utility Vehicle

Part No. 104–6978

Installation Instructions

Note: You will need the Clutch Removal Tool (part number TOR4094) (Fig.) and a torque wrench to perform this procedure. You can obtain the Clutch Removal tool from you Authorized Toro Dealer.

Loose Parts

Description	Qty.	Use
Alternator mounting bracket	1	Install the alternator.
Alternator	1	
Bolt, 3/8 x 2-1/2 inches	1	
Bolt, 3/8 x 2 inches	2	
Bolt, 3/8 x 1-3/4 inches	1	
Flange nut, 3/8 inch	4	
Bolt, M8 x 45 mm	1	
Lock washer, 5/16 inch	1	
Flat washer, 11/32 inch	1	
Small spacer	1	
Alternator drive pulley	1	Install the alternator.
Spacer	1	
Belt	1	
Bolt, 1/4 x 1 inch	4	
Lock washer, 1/4 inch	4	
Wire harness	1	Connect the wire harness

PROTOTYPE

© 2002 by The Toro Company
8111 Lyndale Avenue South
Bloomington, MN 55420-1196

All Rights Reserved
Printed in the USA

Removing the Drive Clutch

1. Park the machine on a level surface, stop the engine, set the parking brake, and remove the key from the ignition switch.
2. Remove the drive belt from the driven clutch on the transaxle and the drive clutch on the engine.
3. Remove the plastic cap from the drive clutch (Fig. 1).

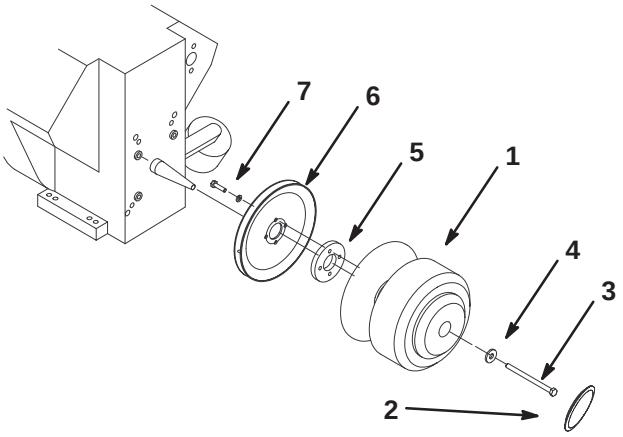

Figure 1

1. Drive clutch
2. Plastic cap
3. Bolt
4. Washer
5. Spacer
6. Alternator drive pulley
7. Bolt, 1/4 x 1 inch, and lock washer, 1/4 inch

4. Remove the bolt and washer securing the drive clutch to the engine tapered shaft (Fig. 1).
5. Grease the end of the clutch removal tool (Fig. 2).

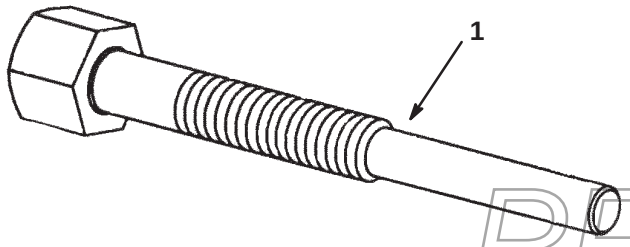

Figure 2

1. Clutch removal tool

PROTOTYPE

6. Insert the tool into the end of the clutch and thread it in slowly using a wrench until the clutch comes off of the tapered drive shaft.

Important To prevent damage to the clutch threads, thread the tool into the clutch only enough to remove it.

Installing the Alternator

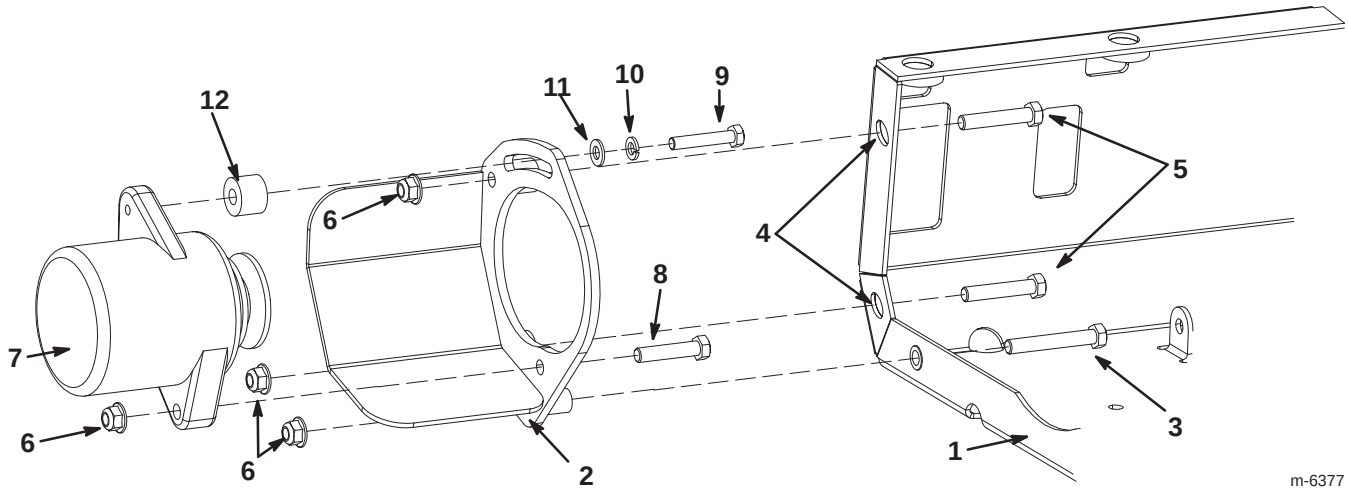

Figure 3

1. Engine mounting pan
2. Alternator mounting bracket
3. Bolt, 3/8 x 2-1/2 inches
4. Drill holes, 7/16 inch dia
5. Bolt, 3/8 x 2 inches
6. Flange nut, 3/8 inch
7. Alternator
8. Bolt, 3/8 x 1-3/4 inches
9. Bolt, M8 x 45 mm
10. Lock washer, 5/16 inch
11. Washer, 11/32 inch
12. Spacer

1. Bolt the alternator bracket to the left side of the engine mounting pan (Fig. 3), using a bolt (3/8 x 2-1/2 inches) and a flange nut (3/8 inch). Ensure that the bracket lines up with the side of the frame.

2. Using the bracket as a template, mark 2 hole locations on the flange of the engine mounting pan (Fig. 3).

3. Remove the alternator bracket and fasteners and drill 2 holes (7/16 inch dia) through the engine mounting pan at the marked locations (Fig. 3).

4. Install the bracket on the pan (Fig. 3) using 2 bolts (3/8 x 2 inches) and 2 flange nuts (3/8 inch) and the fasteners you removed in step 3.

5. Secure the thick flange on the alternator to the bottom hole on the bracket (Fig. 3) using a bolt (3/8 x 1-3/4 inches) and a flange nut (3/8 inch).

6. Secure the thin flange with the threaded hole to the adjustment slot in the bracket (Fig. 3) using a bolt (M8 x 45 mm), a lock washer (5/16 inch), a washer (11/32 inch), and a spacer. Do not fully tighten the fasteners.

Installing the Alternator Drive Pulley and Belt

1. Install the alternator drive pulley and spacer to the back of the drive clutch, as illustrated in Figure 1, using 4 bolts (1/4 x 1 inch) and lock washers (1/4 inch).

2. Torque the bolts to 41 to 55 in-lb (5 to 6 N·m).

3. Loop the alternator drive belt around the pulley.

4. Slide the drive clutch and pulley onto the engine drive shaft and secure it with the washer and bolt you removed previously.

5. Torque the bolt to 25 to 30 ft-lb (40 N·m).

6. Place the plastic cap over the end of the drive clutch.

7. Loop the alternator drive belt over the alternator pulley.

8. Push the top of the alternator away from the drive pulley and tighten the bolt (M8 x 45 mm) in the adjustment slot when the top span of the belt flexes 1/4 inch when you apply 10 lb (4.5 kg) to the center of the span (Fig. 4).

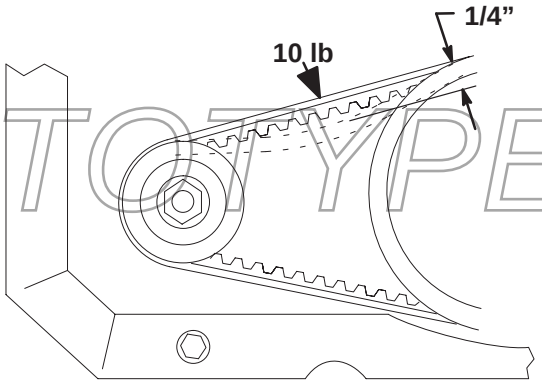

Figure 4

PROTOTYPE

9. Tighten all fasteners.

Connecting the Wire Harness

1. Disconnect the in-engine alternator from the battery by disconnecting the red connector from the white connector at the front of the engine (Fig. 5).

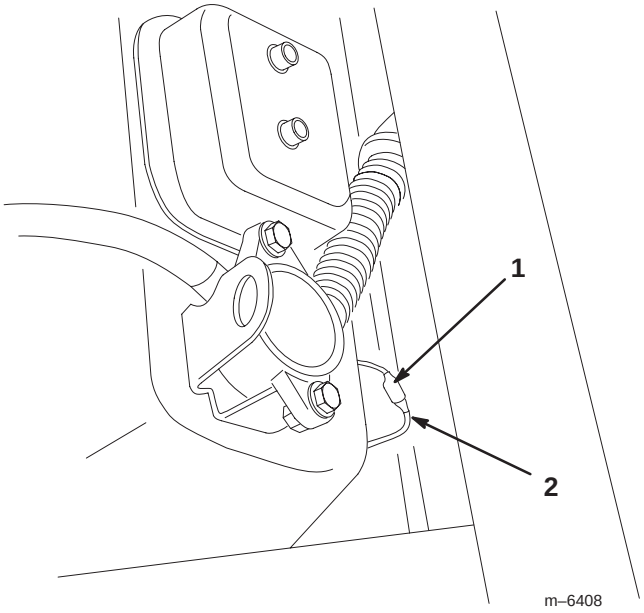

Figure 5

1. Red connector
2. White connector

2. Connect the white connector on the wire harness to the port on the back of the alternator (Fig. 6).

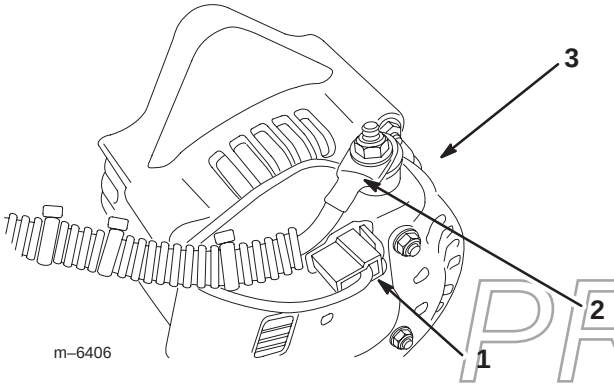

Figure 6

1. White connector
2. Eye-ring terminal on the red wire
3. Alternator

3. Connect the eye-ring terminal on the red wire to the stud on the alternator (Fig. 6).
4. Route the other end of the wire harness over the alternator and along the vehicle frame to the fuse box area.
5. Connect the blue connecter to a 25 amp fuse position on the fuse block (install a 25 amp fuse in the position if there is no fuse) (Fig. 7).

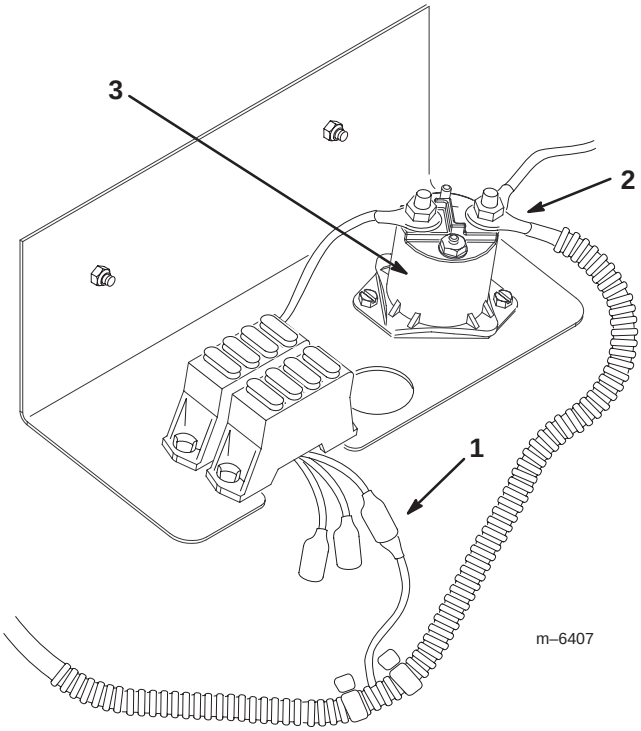

Figure 7

1. Blue connector to a 25 amp fuse position
2. Eye-ring terminal on the red wire.
3. Starter solenoid

6. Connect the eye-ring terminal on the red wire to the positive terminal (terminal with the wire running directly to the battery) on the starter solenoid near the battery (Fig. 7).

Testing the Alternator

1. Set the parking brake and start the engine.
2. Using a voltmeter, check the system voltage across the positive and negative battery terminals.

   If the new alternator is functioning correctly, the voltage should read between 13 and 15 volts at high idle.

PROTOTYPE