Form No. 3328-188

High-Output Alternator Kit

Twister® 1400 and 1600

Part No. 104-6978

Parts Catalog

Ordering Replacement Parts

To order replacement parts, please supply: the part number, the quantity, and the description of each part desired.

Understanding Reference Numbers

Each identified part in an illustration has a reference number. The reference number for a part also appears in the parts list, along with other information about the part.

This catalog uses two special reference number formats, one to indicate parts in a service assembly and another to indicate the quantity of a given part in an illustration.

Service Assembly Reference Numbers

Parts in service assemblies have reference numbers in the form **a:b.** The **a** represents the reference number of the entire service assembly and the **b** represents a sequential number unique to each part within the service assembly.

For example, a wheel assembly might be identified by reference number **6**, the tire by **6:1**, the valve by **6:2**, and the wheel by **6:3**. When you order the assembly identified by reference number 6, you receive all parts identified by reference numbers 6:1, 6:2, and 6:3. However, you may also order any part individually.

Reference numbers of this type appear in illustrations and in part lists.

Reference Numbers Indicating Quantity

In an illustration, if a reference number indicates more than one part, the reference number has the form **nX y.** The **n** represents the quantity of the part, the **X** is the multiplication symbol, and the **y** represents the reference number.

For example, in an illustration, the reference number **2X 37** means that two of the parts identified by reference number 37 are indicated.

© The TORO Company — 2002
All Rights Reserved

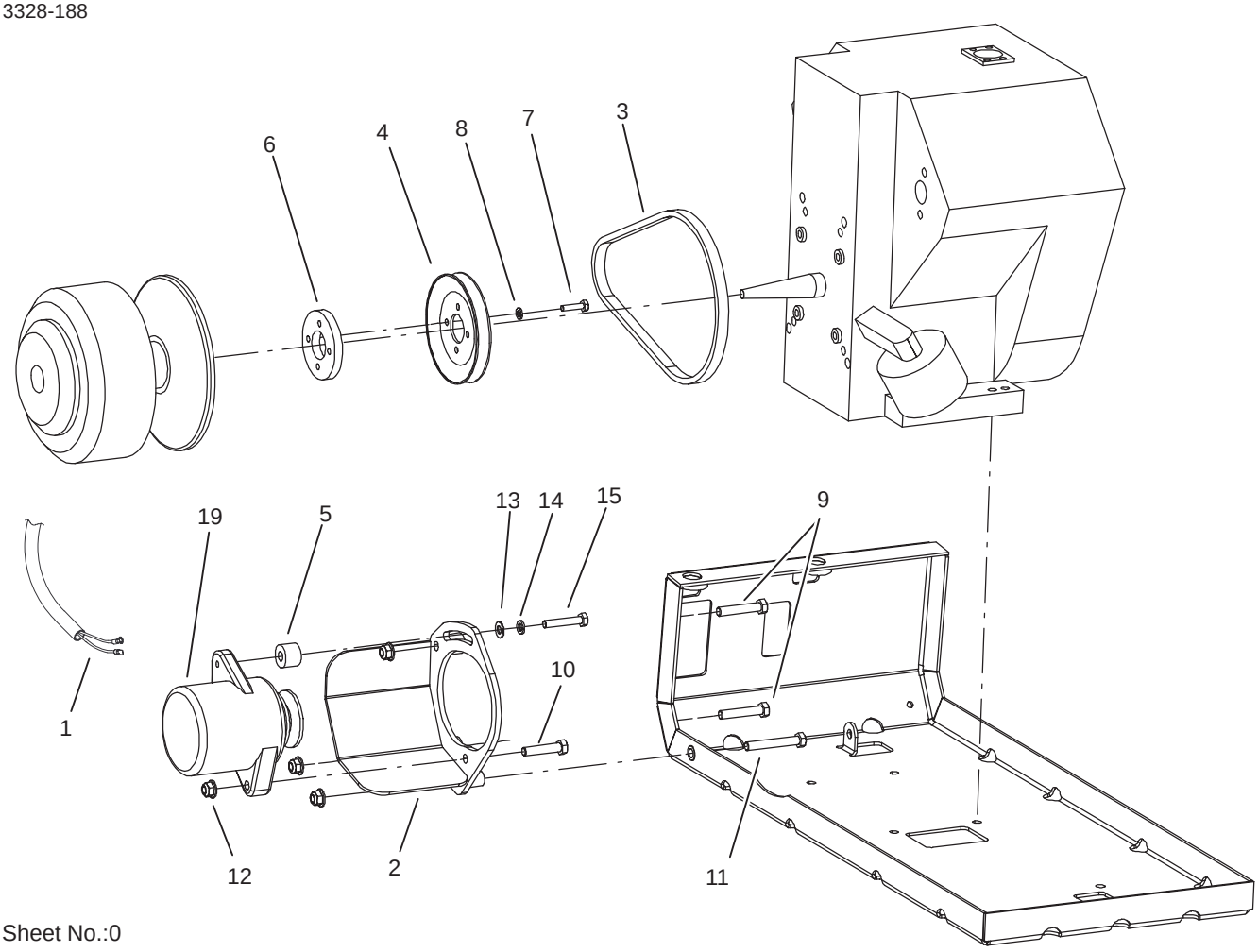

Sheet No.:0

High-Output Alternator Assembly

Ref. No.	Part No.	Qty.	Description
1	104-6578	1	Harness-Wire
2	104-6576-03	1	Bracket-Alternator
3	104-6579	1	Belt-Alternator
4	104-6582	1	Pulley-Drive
5	99-3440	1	Spacer
6	99-7064	1	Spacer-Starter
7	321-6	4	Screw-HH
8	3253-3	4	Washer-Lock
9	323-10	2	Screw-HH
10	323-9	1	Screw-HH
11	323-12	1	Screw-HH
12	104-8301	4	Nut-Flange, NI
13	3256-23	1	Washer-Flat
14	3253-4	1	Washer-Lock
15	33114-045	1	Screw-HH
19	99-9209	1	Alternator

Ref. No.	Part No.	Qty.	Description

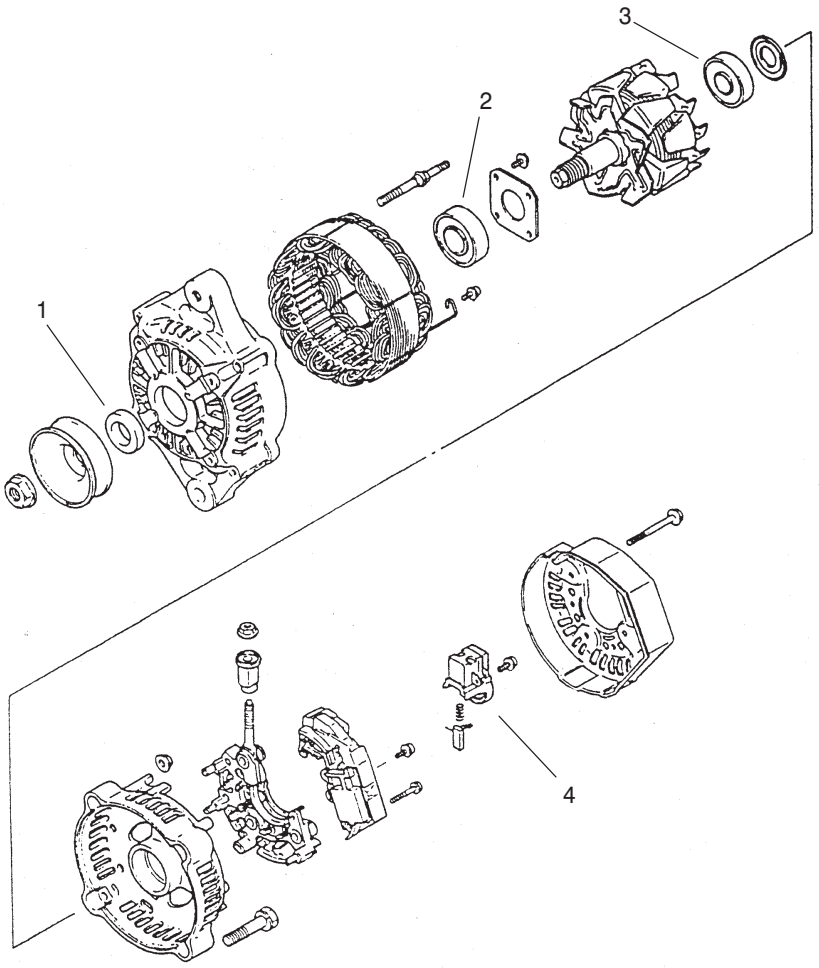

Sheet No.:A1
T-3540

Alternator Assembly No. 99-9209

Ref. No.	Part No.	Qty.	Description
1	100-5315	1	Collar
2	100-5316	1	Bearing
3	100-5317	1	Bearing
4	100-5318	1	Brush Holder ASM

Ref. No.	Part No.	Qty.	Description


TORO®