Form No. 3328–214

Bagger Arm Kit for Use with ROPS

100 Series Z Master Mowers

200 Series Z Master Mowers

Part No. 106–5869

Part No. 106–5890

Installation Instructions

Loose Parts

Description	Qty.	Use
Bagger arm	1	Installing the bagger lever for 100 Series and 200 Series baggers
Cable tie	2	
Grip	1	
Cotter pin	1	
Cable—100 Series Baggers Only	1	
Bolt, 5/16 x 1–1/4 inch	4	Installing the washers for a 100 Series ROPS
Washer, 11/32 inch	4	

Install this kit when both a bagger and Roll Over Protection System (ROPS) are used together.

Removing the Existing Bagger Arm

1. Remove the shoulder bolt and cable from the bagger arm (Fig. 1). Keep the shoulder bolt for use with new bagger arm.

Note: Steps 2 and 3 are for 100 Series baggers only.

2. For 100 Series baggers only, remove the nut and pulley from the bagger and remove the cable (Fig. 1). Save the pulley and all hardware.
3. For 100 Series baggers only, remove the cable from the bagger door hinge (Fig. 1). Save all hardware.
4. Loosen the setscrew holding the latch lever.
5. Cut the cable tie (Fig. 1).
6. Remove the grip from the bagger arm (Fig. 1).

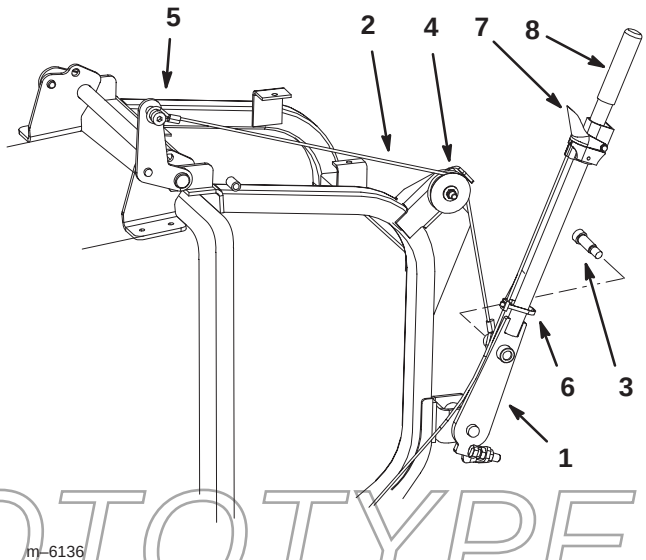

PROTOTYPE

Figure 1

1. Bagger arm
2. Cable
3. Shoulder bolt
4. Pulley and nut
5. Bagger door hinge
6. Cable tie
7. Latch lever
8. Grip

© 2002 by The Toro Company
8111 Lyndale Avenue South
Bloomington, MN 55420-1196

All Rights Reserved
Printed in the USA

7. Remove the cotter pin and washer from the bagger arm (Fig. 2). Save the washer.
8. Slide the existing bagger arm out from the bagger and save the washer (Fig. 2).
9. Remove the latch lever off of the bagger arm (Fig. 1).

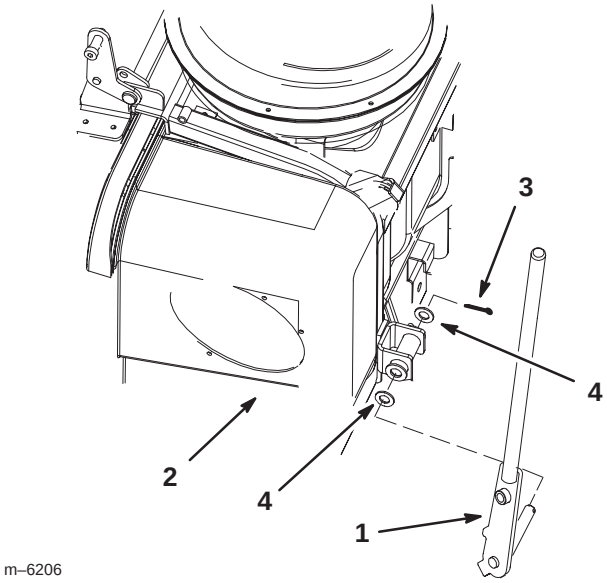

Figure 2

1. Bagger arm
2. Bagger
3. Cotter pin
4. Washer

Installing the New Bagger Arm on 100 and 200 Series Baggers

Note: Make sure the bagger is installed before installing the handle.

1. Loosely install the latch lever onto the new handle (Fig. 3).
2. Slide the grip on. Make sure the grip is totally on the bagger lever (Fig. 3).

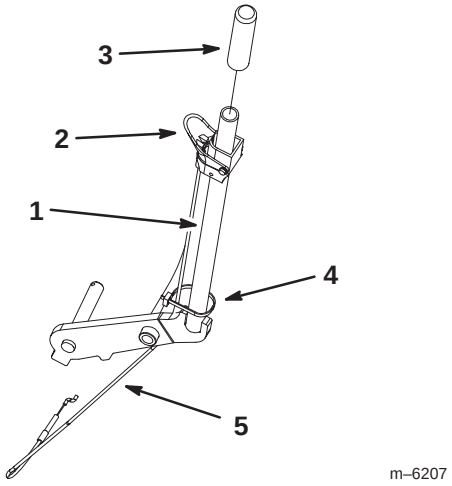

Figure 3

1. Bagger arm
2. Latch lever
3. Grip
4. Cable tie
5. Release lever cable

3. For 100 Series baggers, position the bagger arm inside the right rear corner of the ROPS and under the cross member (Fig. 4).
4. For 200 Series baggers, position the bagger arm outside the right rear corner of the ROPS (Fig. 5).
5. Install an existing washer onto the bagger arm and insert the arm into the bagger (Figure 4 or 5).
6. Secure the bagger arm with an existing washer and a cotter pin (Figure 4 or 5).

PROTOTYPE

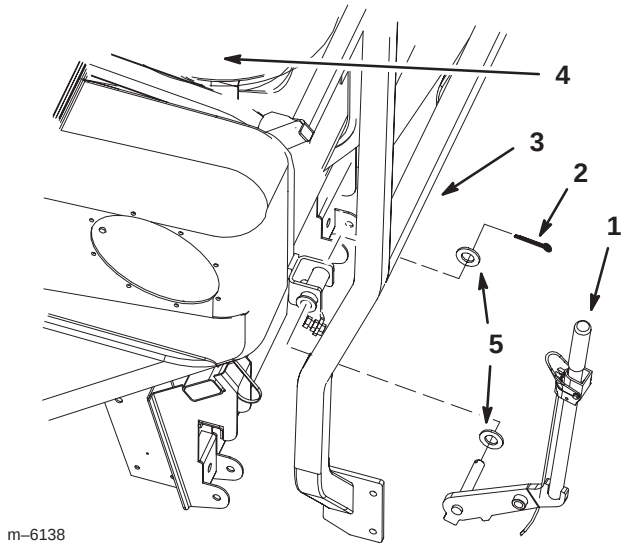

Figure 4

1. Bagger arm—100 Series (Install inside ROPS)
2. Cotter pin
3. ROPS—100 Series (Rollover Protection System)
4. Bagger
5. Existing washer

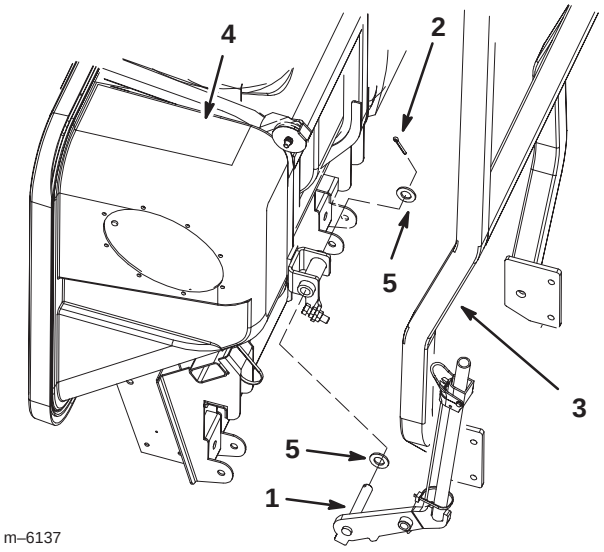

Figure 5

1. Bagger arm—200 Series (Install outside ROPS)
2. Cotter pin
3. ROPS—200 Series (Rollover Protection System)
4. Bagger
5. Existing washer

Note: For **100 Series baggers**, use the **new** cable included in the kit. **200 Series baggers** use the **existing** cable.

7. For 100 Series baggers, install the new cable to the bagger door hinge (Fig. 6).

8. For 100 Series baggers, install the cable onto the pulley and install to the bagger (Fig. 6).

9. For 100 and 200 Series baggers, install the bagger cable to the bagger arm with the existing shoulder bolt (Fig. 6).

PROTOTYPE

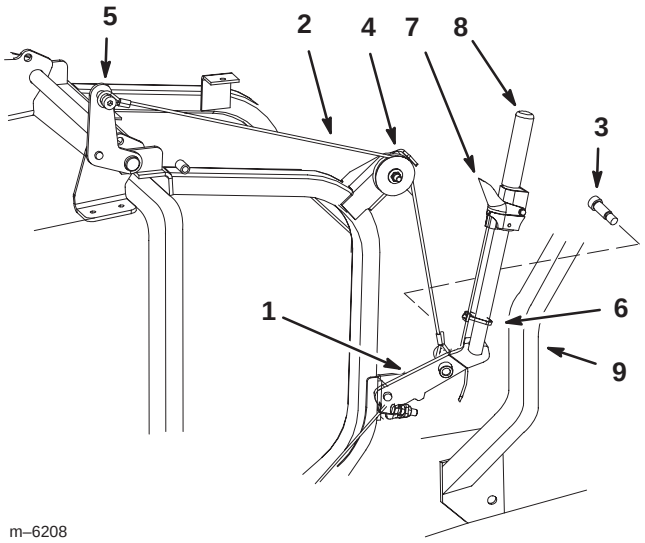

Figure 6

1. Bagger arm
2. Cable
3. Existing shoulder bolt
4. Pulley and nut
5. Bagger door hinge
6. Cable tie
7. Latch lever
8. Grip
9. ROPS (Rollover Protection System)

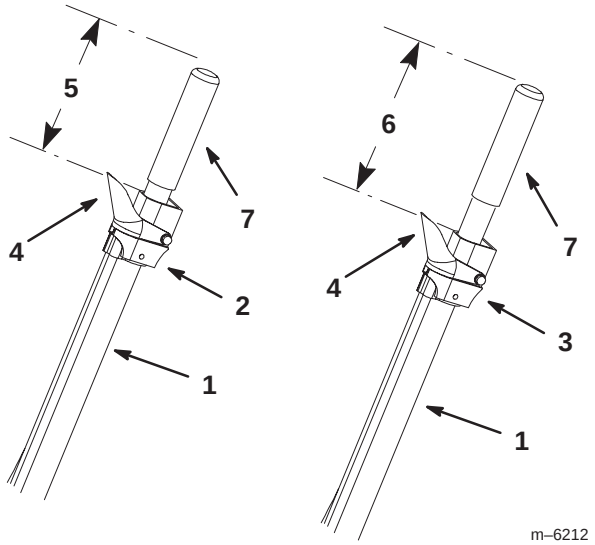

Figure 7

1. Bagger arm
2. Latch lever position—100 Series
3. Latch lever position—200 Series
4. Latch lever cable
5. 5 inches—100 Series
6. 6 inches—200 Series
7. Grip

Adjusting the Latch Lever

1. For a 100 Series bagger, position the latch lever 5 inches down from the top of the grip. See Figure 7.

2. For a 200 Series bagger, position the latch lever 6 inches down from the top of the grip. See Figure 7.

3. Tighten the setscrew that holds the latch lever.

4. Install the cable ties (Fig. 6).

Adjusting the Bagger Arm

Check the bagger arm and if needed, adjust it to remove any slack.

1. Loosen the nuts on both sides of the stop bracket (Fig. 8).

2. Adjust the stop bolt until there is **no** slack in the bagger cable (Fig. 8).

3. Tighten the nuts on both sides of the stop bracket (Fig. 8).

PROTOTYPE

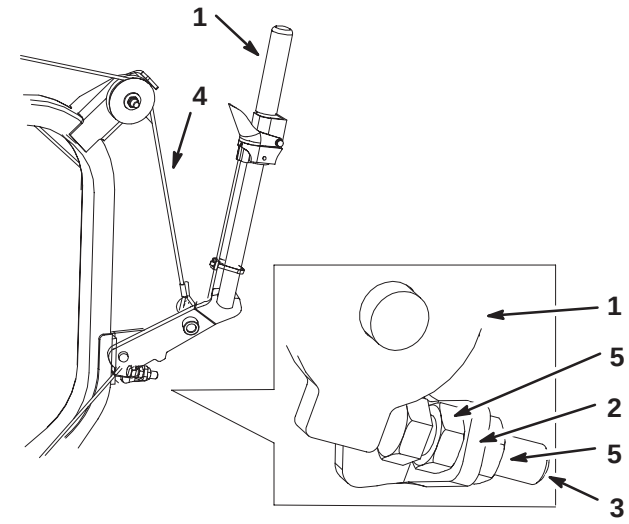

m–6209

Figure 8

1. Bagger arm
2. Stop bracket
3. Stop bolt
4. Bagger cable
5. Nut

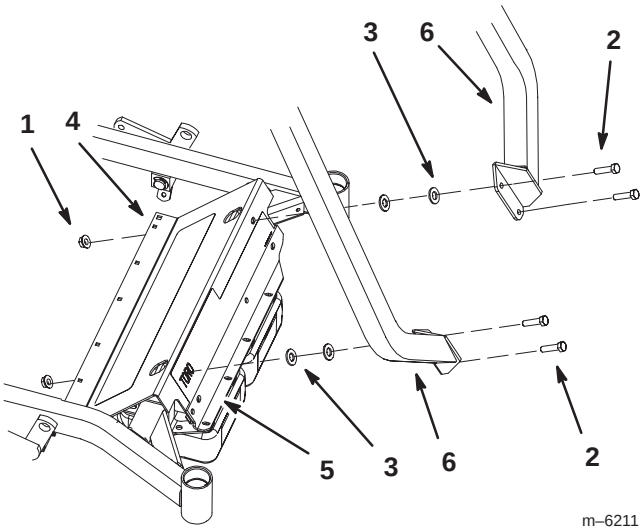

m–6211

Figure 9

1. Existing flange nut, 5/16 inch
2. Bolt, 5/16 x 1–1/4 inch
3. Flat washer, 5/16 inch
4. Front floorpan
5. Support plate
6. ROPS—100 Series (Rollover Protection System)

Installing the Washers for a 100 Series ROPS

Install washers when a 100 Series bagger and ROPS are used at the same time.

1. Remove the 4 bolts, washers and flange nuts that hold the front floorpan and support plate to the front frame (Fig. 9). Save the flange nuts.

2. For the top 2 holes, position 2 washers (11/32 inch) between the ROPS and front floorpan for each hole (Fig. 9).

3. Install the top 2 bolts (5/16 x 1–1/4 inch) through the ROPS, washers and front floorpan (Fig. 9). Secure the bolts with existing flange nuts.

4. Using the bottom holes that hold the front floorpan, install the support plate and ROPS to the front of the machine with 2 new bolts (5/16 x 1–1/4 inch) and 2 existing flange nuts (5/16 inch) (Fig. 9).

PROTOTYPE

PROTOTYPE

PROTOTYPE



PROTOTYPE