Form No. 3328–222

Z149

Z–Master® with 52in SFS Side Discharge Mower

Model No. 74179—230000001 and Up

Parts Catalog

Ordering Replacement Parts

To order replacement parts, please supply: the part number, the quantity, and the description of each part desired.

Understanding Reference Numbers

Each identified part in an illustration has a reference number. The reference number for a part also appears in the parts list, along with other information about the part.

This catalog uses two special reference number formats, one to indicate parts in a service assembly and another to indicate the quantity of a given part in an illustration.

Service Assembly Reference Numbers

Parts in service assemblies have reference numbers in the form **a:b.** The **a** represents the reference number of the entire service assembly and the **b** represents a sequential number unique to each part within the service assembly.

For example, a wheel assembly might be identified by reference number **6**, the tire by **6:1**, the valve by **6:2**, and the wheel by **6:3**. When you order the assembly identified by reference number 6, you receive all parts identified by reference numbers 6:1, 6:2, and 6:3. However, you may also order any part individually.

Reference numbers of this type appear in illustrations and in part lists.

Reference Numbers Indicating Quantity

In an illustration, if a reference number indicates more than one part, the reference number has the form **nX y.** The **n** represents the quantity of the part, the **X** is the multiplication symbol, and the **y** represents the reference number.

For example, in an illustration, the reference number **2X 37** means that two of the parts identified by reference number 37 are indicated.

© The TORO Company — 2002
All Rights Reserved

Contents

Description	Page
Front Frame Assembly	4
Caster Wheel Assembly No. 1–634662	5
Front Spring Assembly No. 103–1987	6
Height of Cut Assembly	7
Main Frame Assembly	8
Seat Assembly No. 1–633705	9
Fuel System Assembly	10
Parking Brake System Assembly	11
Motion Control System Assembly	12
Hydraulic System Assembly	13
Pump, Idler and Belt Assembly	15
Engine and Clutch Assembly	16
Deck Assembly	17
Deck Spindle Assembly	18
Idler, Pulley/Lift Strut, Chain Assembly	19
Electrical System Assembly	20
Electrical Schematic	21
Cylinder/Crankcase Assembly Kawasaki FH601V–DS06	22
Cylinder/Crankcase Assembly Kawasaki FH601V–DS06	23
Piston/Crankshaft Assembly Kawasaki FH601V–DS06	24
Valve/Camshaft Assembly Kawasaki FH601V–DS06	25
Valve/Camshaft Assembly Kawasaki FH601V–DS06	26
Lubrication Equipment Assembly Kawasaki FH601V–DS06	27
Cooling Equipment Assembly Kawasaki FH601V–DS06	28
Cooling Equipment Assembly Kawasaki FH601V–DS06	29
Electric Equipment Assembly Kawasaki FH601V–DS06	30
Electric Equipment Assembly Kawasaki FH601V–DS06	31
Control Equipment Assembly Kawasaki FH601V–DS06	32
Control Equipment Assembly Kawasaki FH601V–DS06	33
Carburetor Assembly Kawasaki FH601V–DS06	34
Carburetor Assembly Kawasaki FH601V–DS06	35
Air–Filter Assembly Kawasaki FH601V–DS06	36
Fuel Tank/Fuel Valve Assembly Kawasaki FH601V–DS06	37
Starter/Decal – Kawasaki FH601V–DS06	38

Accessories

Description	Model / Part No.
Recycler Kit	59225
Bahaia Mulch Kit	59227
High Sail Blades (3 required for improved bagging)	56–2390
Atomic Blades (3 required for improved mulching)	104–1301
Steel Bagger	30107
Striping Kit	30121
High Suspension Seat	99–8522
Z–Stand Kit	105–1621
Hitch Kit	99–8924

Part Description Abbreviations

Part descriptions in this catalog may include the following abbreviations.

Abbreviation	Meaning
AR	as required
ASM	assembly
CARR	carriage
DEG	degrees
FH	flat head
GA	gauge
HF	hex flange
HH	hex head
HHF	hex head flange
HLH	hex lag head
HJ	hex jam
HOC	height-of-cut
HS	hex socket
HSBH	hex socket button head
HSFH	hex socket flat head
HSH	hex socket head
HWH	hex washer head
HWHTF	hex washer head thread forming
HYD	hydraulic
INC	incorporated
LH	left hand
NI	nylon insert
PPH	Phillips pan head
PTH	Phillips truss head
PTO	power take off
RH	right hand
SFH	slotted fillister head
SHH	slotted hex head
SQH	square head
SHWH	slotted hex washer head
SPH	slotted pan head
SRH	slotted round head
STD	standard
TAP	self tapping
TTH	Torx truss head
WH	wing head

3328–222

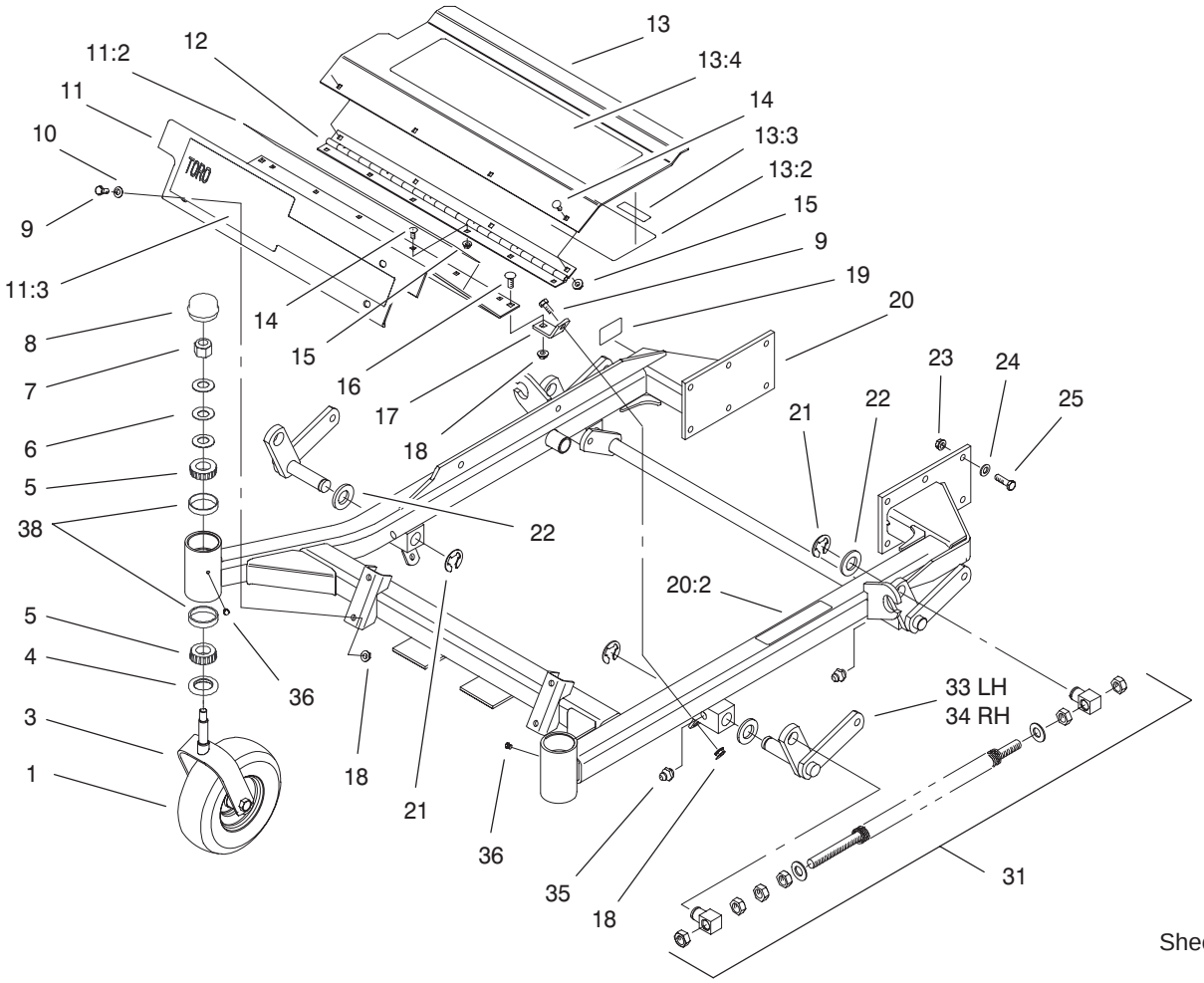

Sheet No.:2

Front Frame Assembly

Ref. No.	Part No.	Qty.	Description
1	1–634662	2	Caster Wheel ASM
3	1–632511–01	2	Caster
4	1–543511	2	Seal–Grease
5	254–94	4	Bearing–Cone, Taper
6	1–633508	6	Washer–Bellville
7	3296–51	2	Nut–Lock, NI
8	1–543513	2	Cap–Grease
9	322–3	6	Screw–HH
10	3256–23	4	Washer–Flat
11	99–3940	1	Floorpan–Front
11:2	1–633553	1	Pad–Antiskid
11:3	1–633737	1	Decal–Z Master
12	1–653049	1	Hinge–Floorpan
13	99–3930	1	Footrest ASM
13:2	99–3924	1	Decal–Service
13:3	98–5954	1	Decal–Missing, Cover
13:4	1–633553	1	Pad–Antiskid
14	3229–10	10	Screw–CARR
15	32128–33	10	Nut–HF
16	3230–1	2	Screw–CARR
17	99–3870–01	2	Bracket–Floorpan
18	32128–20	8	Nut–HF
19	105–2625	1	Decal–Safety STD
20	99–3931	1	Front Frame ASM
20:2	1–633818	1	Decal–Warning
21	32151–103	6	Ring–Snap

Ref. No.	Part No.	Qty.	Description
22	3256–29	6	Washer–Flat
23	3290–357	12	Nut–HHF
24	98–5975	12	Washer–Belleville
25	323–7	12	Screw–HH
31	103–1987	2	Front Spring ASM
33	99–3871–01	1	LH Lift Arm ASM
34	99–3872–01	1	RH Lift Arm ASM
35	302–19	4	Fitting–Grease
36	1–811010	2	Plug
38	254–72	4	Bearing–Cup, Tapered

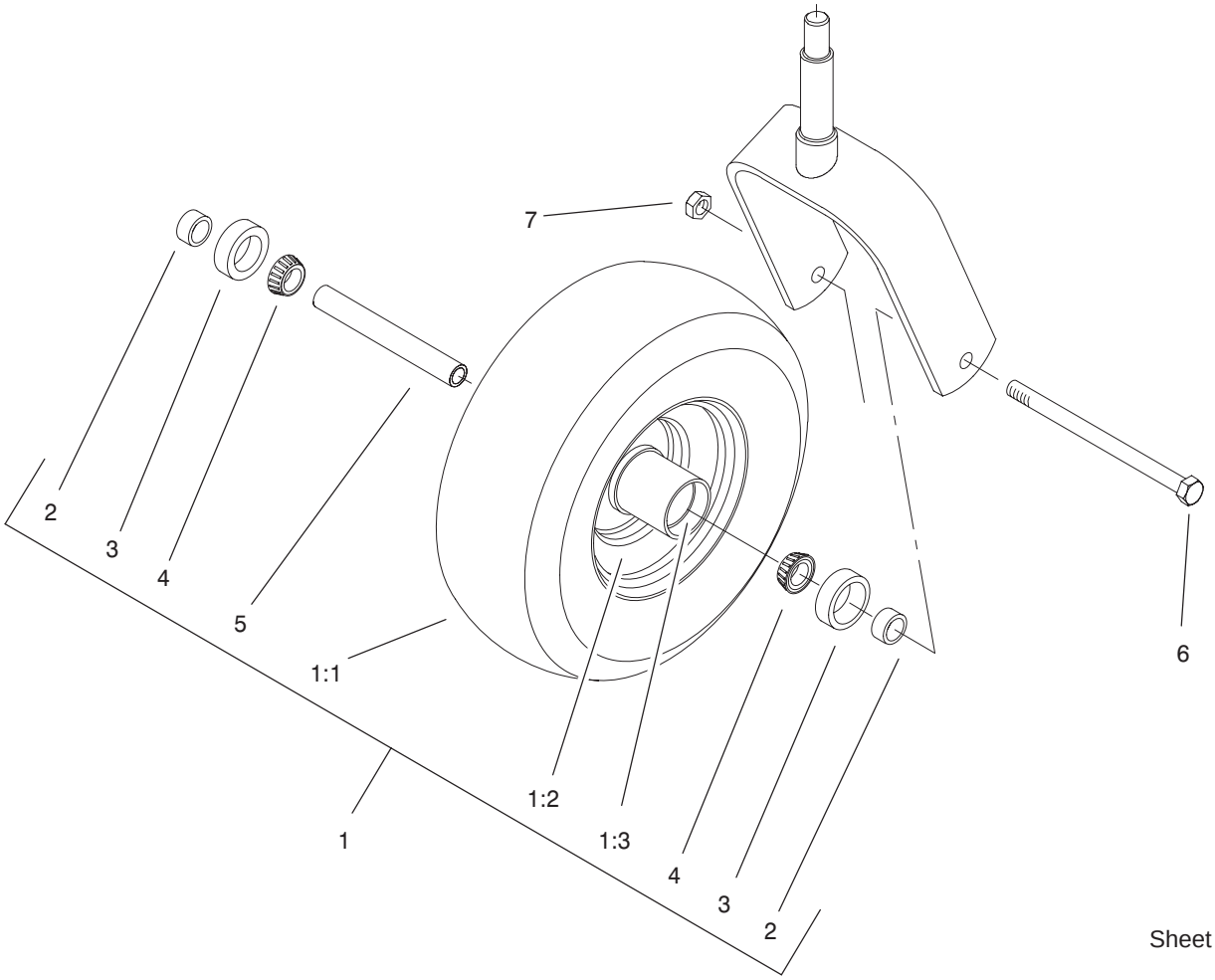

Sheet No.:A1
C–3038

Caster Wheel Assembly No. 1–634662

Ref. No.	Part No.	Qty.	Description
1	1–633582	1	Wheel & Tire ASM
1:1	1–633002	1	Tire
1:2	1–633583	1	Wheel
1:3	1–633584	2	Bearing–Cup
2	1–633581	2	Spacer–Bearing
3	1–633580	2	Seal–Bearing
4	1–633585	2	Bearing–Cone, Taper
5	1–633579	1	Spacer–Caster, Front
6	325–36	1	Screw–HH
7	3296–45	1	Nut–Lock, NI

Ref. No.	Part No.	Qty.	Description

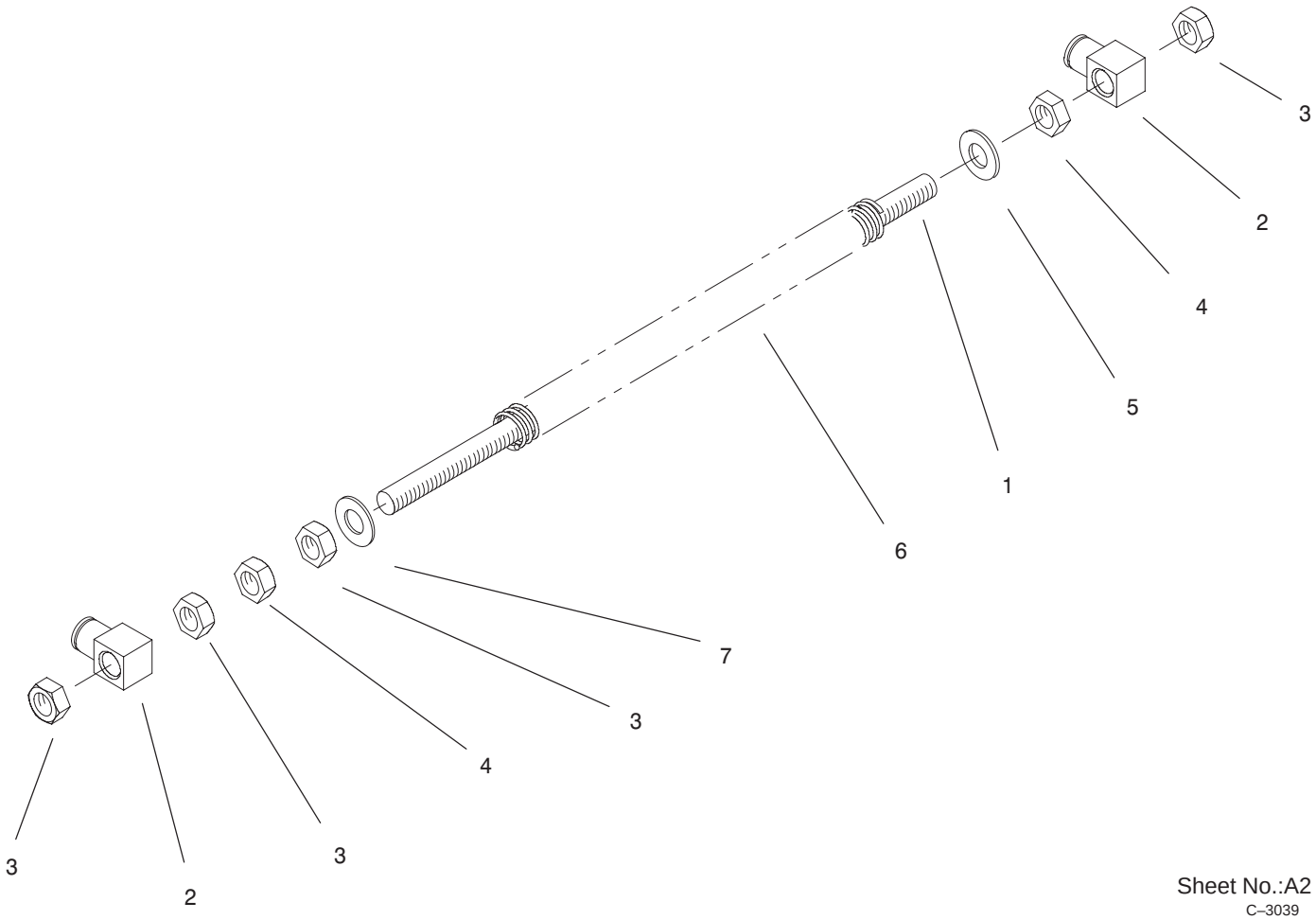

Sheet No.:A2
C–3039

Front Spring Assembly No. 103–1987

Ref. No.	Part No.	Qty.	Description
1	1–653011	1	Rod–Lift, Deck
2	1–633441	2	Swivel–Deck Mount, Rear
3	3217–11	4	Nut–Hex
4	3218–6	2	Nut–Jam
5	1–805517	1	Washer
6	1–653009	1	Spring–Compression
7	3256–27	1	Washer–Flat

Ref. No.	Part No.	Qty.	Description

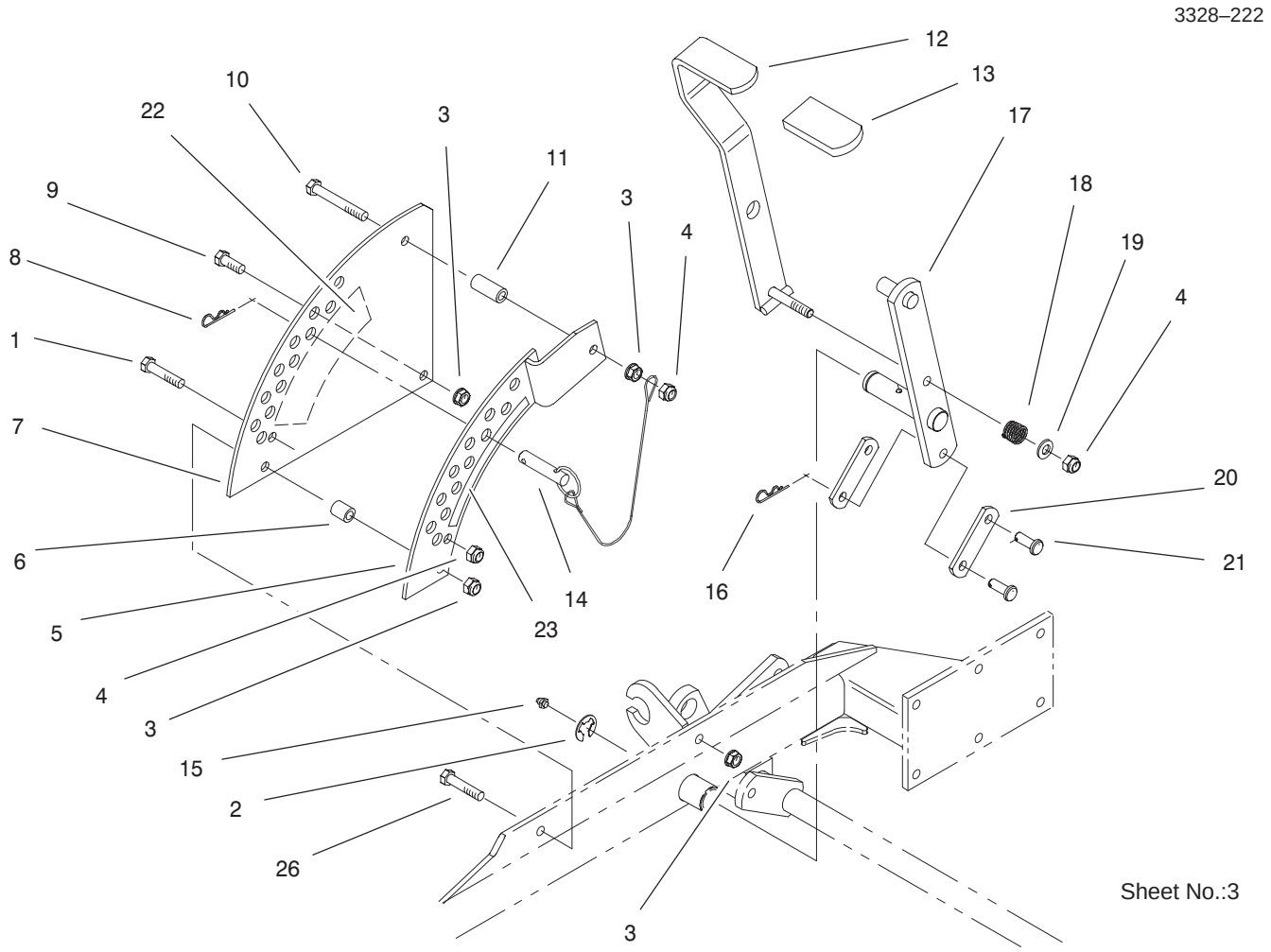

Height of Cut Assembly

Ref. No.	Part No.	Qty.	Description
1	323–9	1	Screw–HH
2	32151–103	1	Ring–Snap
3	3290–357	3	Nut–HHF
4	3296–39	3	Nut–Lock, NI
5	1–652235–01	1	Plate–Lift, Deck
6	1–633080	1	Bushing–Lever, Lift
7	1–653230–01	1	Plate–Lift, Deck
8	1–806005	1	Pin–Hair
9	323–6	1	Screw–HH
10	323–13	1	Screw–HH
11	1–633082	1	Bushing–Lever, Lift
12	103–2078–03	1	Handle–Lift
13	1–633295	1	Grip–Lever, Lift
14	1–633097	1	Pin–Hitch W/Lanyard
15	302–19	1	Fitting–Grease
16	1–806003	2	Pin–Hair
17	99–3922–03	1	Arm–Lift
18	1–633325	1	Spring–Compression
19	3256–24	1	Washer–Flat
20	1–633068	2	Arm–Lift, Deck
21	1–808284	2	Pin–Clevis
22	1–653140	1	Decal–Deck Height, Outer
23	1–653147	1	Decal–Deck Height, Inner
26	323–8	1	Screw–HH

Ref. No.	Part No.	Qty.	Description

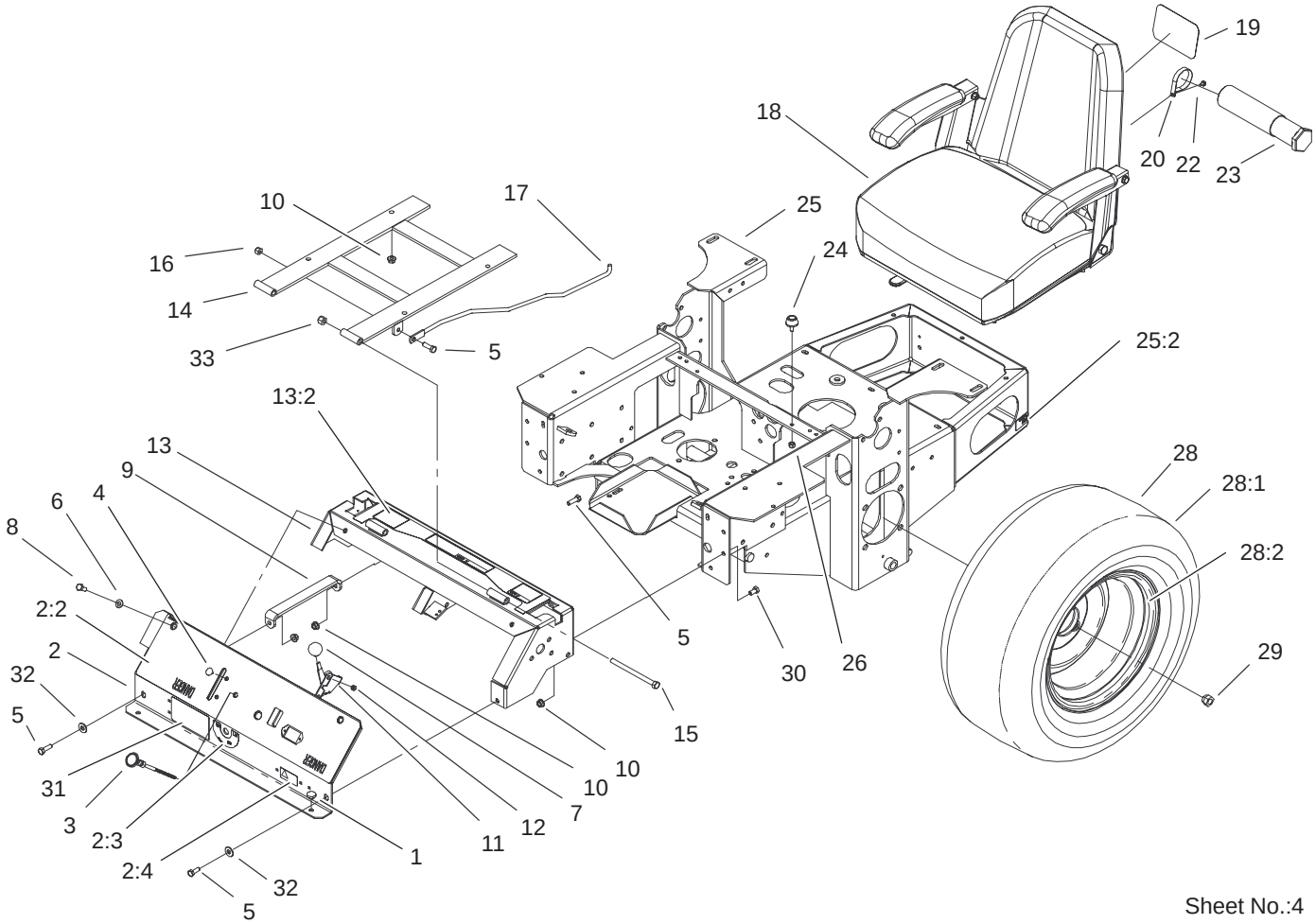

Sheet No.:4

Main Frame Assembly

Ref. No.	Part No.	Qty.	Description
1	1–513658	2	Bumper–Catcher, Grass
2	99–3932	1	Control Panel ASM
2:2	99–3942	1	Decal–Panel, Control
2:3	103–0262	1	Decal–Valve, Fuel
2:4	98–4387	1	Decal–Protection, Ear
3	1–603336	1	Control–Choke
4	1–807513	2	Bolt–CARR
5	322–5	3	Screw–HH
6	3256–23	2	Washer–Flat
7	1–513592	1	Knob–Ball
8	322–3	3	Screw–HH
9	1–653089–03	1	Bracket
10	32128–20	12	Nut–HF
11	1–633696	1	Cable–Throttle
12	3296–2	2	Nut–Lock
13	105–6123	1	Console ASM
13:2	103–1997	1	Decal–Console, Top
14	1–632187–03	1	Frame–Seat
15	323–39	2	Screw–HH
16	3296–29	1	Nut–Lock, NI
17	103–1731	1	Rod–Retainer, Seat
18	1–633705	1	Seat ASM
19	99–4693	1	Decal–Toro
20	2412–120	2	R–Clamp
22	32104–76	2	Screw

Ref. No.	Part No.	Qty.	Description
23	74–0720	1	Tube–Manual
24	1–523420	2	Bumper
25	105–3649	1	Main Frame ASM
25:2	65–2690	2	Decal–Surface, Hot
26	3296–42	2	Nut–Lock, NI
28	1–653159	2	Wheel And Tire ASM
28:1	1–653160	1	Tire
28:2	1–653161	1	Wheel
29	242–50	8	Nut–Lug
30	322–2	6	Screw–HH
31	99–8909	1	Decal–Z149
32	3256–3	2	Washer–Flat
33	3296–39	2	Nut–Lock, NI

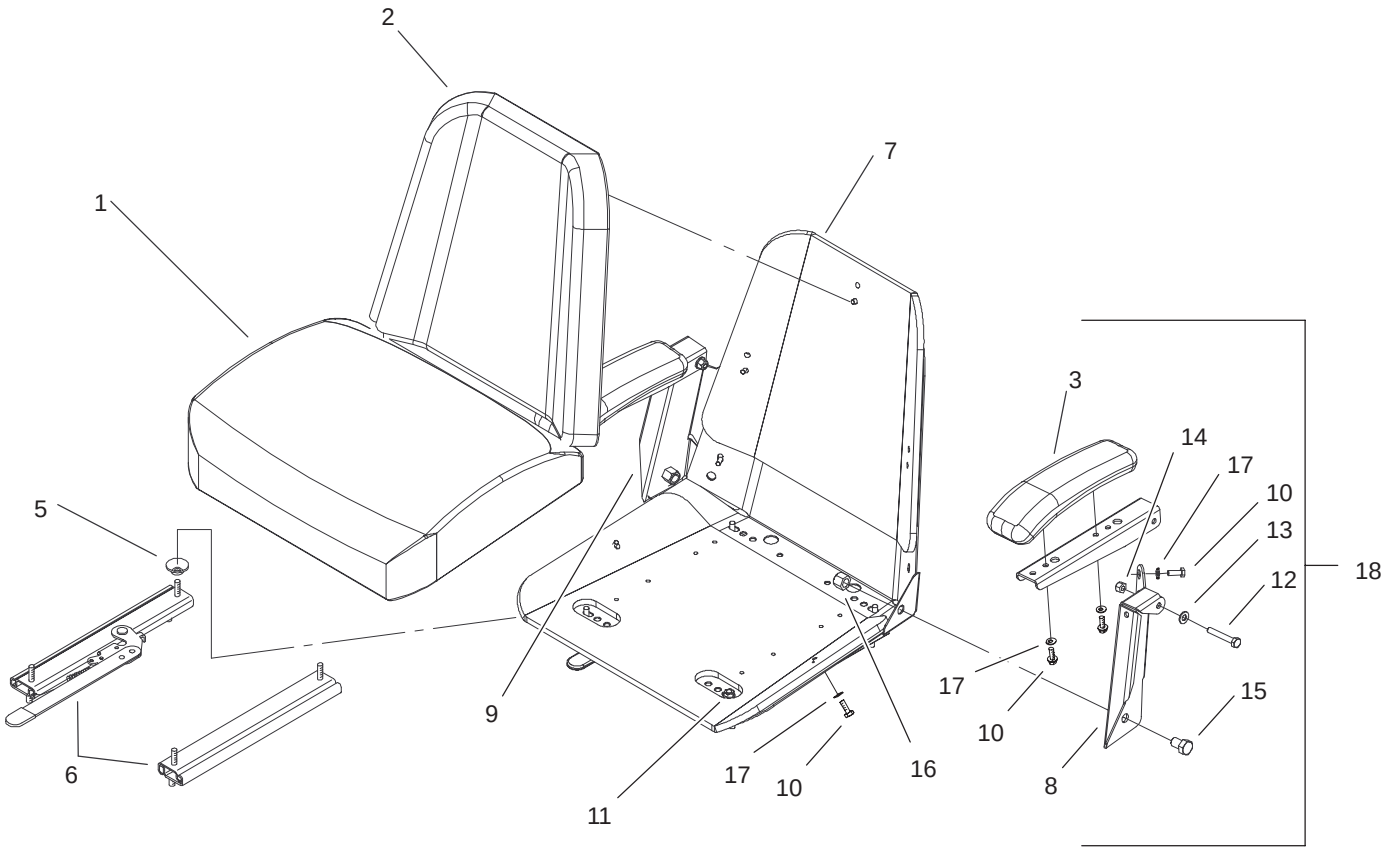

Sheet No.:A3
C–3037

Seat Assembly No. 1–633705

Ref. No.	Part No.	Qty.	Description
1	103–0290	1	Cushion–Seat, Bottom
2	104–7754	1	Cushion–Seat, Back
3	1–633710	2	Cushion–Armrest
5	1–543401	4	Spacer–Track
6	1–643255	1	Track–Seat
7	1–633859	1	Frame–Seat
8	105–3622	1	Bracket–Armrest, LH
9	105–3621	1	Bracket–Armrest, RH
10	321–4	11	Screw–HH
11	32128–20	4	Nut–HF
12	322–10	2	Screw–HH
13	3256–23	4	Washer–Flat
14	3296–29	2	Nut–Lock, NI
15	325–2	2	Screw–HH
16	3296–23	2	Nut–Lock, NI
17	3256–22	11	Washer–Flat
18	105–3620	1	Kit–Armrest

Ref. No.	Part No.	Qty.	Description

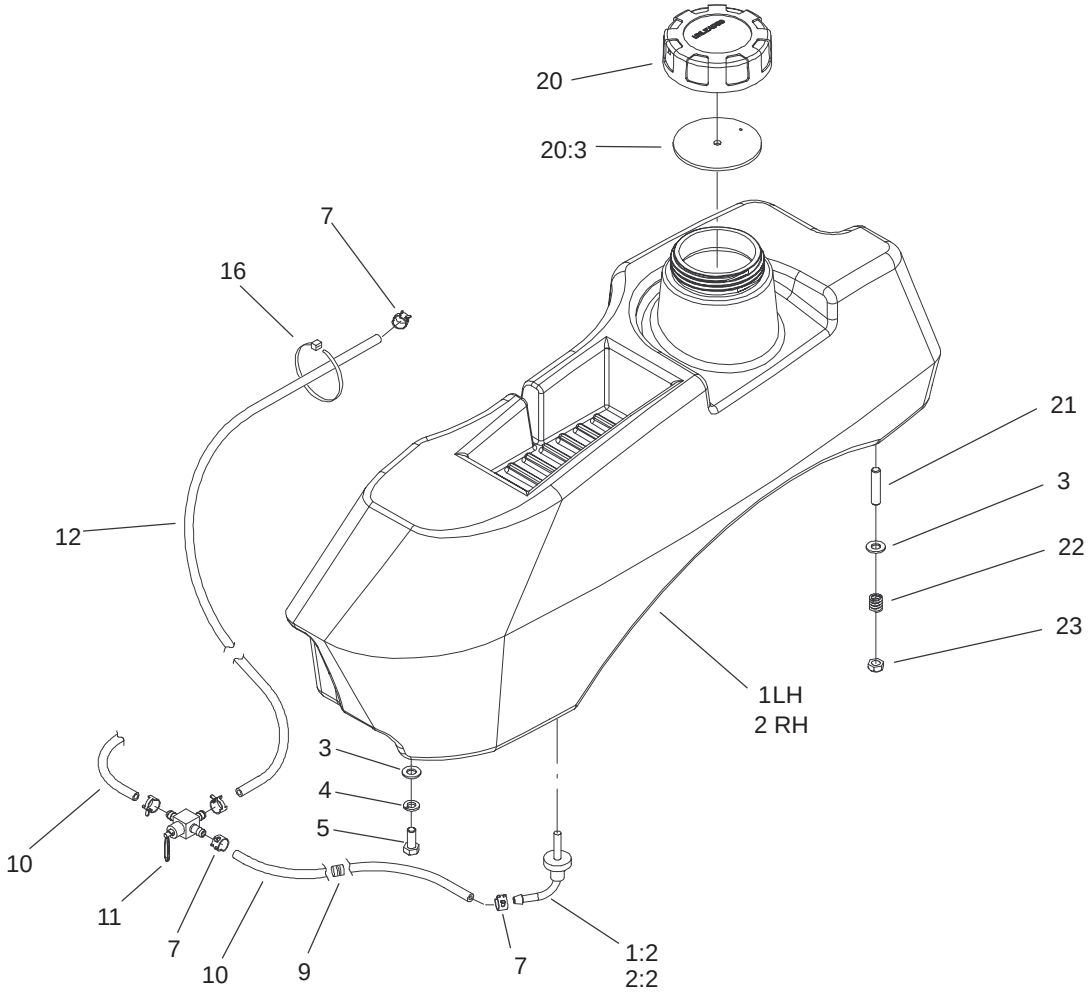

Sheet No.:5

Fuel System Assembly

Ref. No.	Part No.	Qty.	Description
1	105–3625	1	LH Fuel Tank ASM
1:2	103–2605	1	Fitting–Fuel, Bulkhead
2	105–3624	1	RH Fuel Tank ASM
2:2	103–2605	1	Fitting–Fuel, Bulkhead
3	3256–23	8	Washer–Flat
4	1–805005	4	Washer–Lock
5	322–3	4	Screw–HH
7	1–303077	6	Clamp–Line, Fuel
9	1–543296	2	Grommet–Line, Fuel
10	1–543526	2	Hose–Fuel
11	1–633347	1	Valve–Fuel
12	103–0216	1	Hose–Fuel
16	1–303335	1	Tie–Plastic
20	88–3980	2	Gas Cap ASM
20:3	88–4010	1	Gasket–Cap, Gas
21	1–633023	4	Stud
22	1–633349	4	Spring–Tank, Fuel
23	3296–47	4	Nut–Lock, NI

Ref. No.	Part No.	Qty.	Description

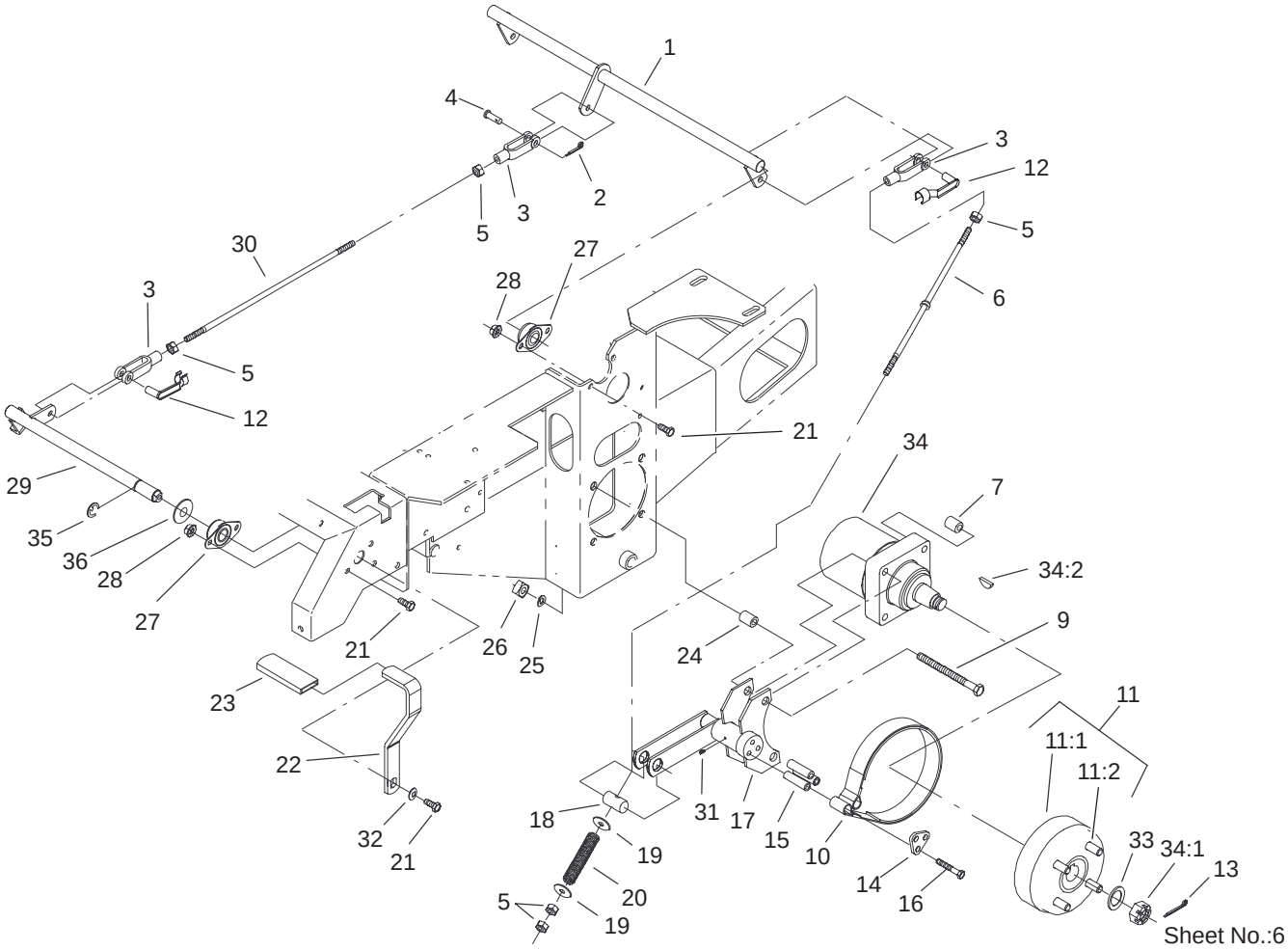

Parking Brake System Assembly

Ref. No.	Part No.	Qty.	Description
1	1–652073–03	1	Crank–Brake, Park
2	3272–10	1	Pin–Cotter
3	1–633131	4	Yoke–Linkage, Brake
4	1–808285	1	Pin–Clevis
5	3219–3	8	Nut–HH
6	103–0356	2	Rod–Brake
7	1–653068	4	Spacer–Wheel
9	325–13	8	Screw–HH
10	103–0355	2	Band–Brake
11	103–0590	2	Hub–Wheel
11:1	103–0589	1	Hub–Wheel
11:2	1–633926	4	Stud–Wheel
12	103–2399	3	Pin–Spring, Clevis
13	1–806800	2	Pin–Cotter
14	103–0374	2	Retainer–Band, Brake
15	103–0384	6	Spacer
16	322–9	6	Screw–HH
17	103–0352–03	2	Bracket–Brake
18	1–633144	2	Pin–Trunion
19	3256–4	4	Washer–Flat
20	1–633454	2	Spring–Brake
21	323–4	9	Screw–HH
22	1–653074–03	1	Handle–Brake, Park
23	1–633268	1	Grip–Lever, Brake
24	1–653069	4	Spacer–Wheel
25	3253–7	8	Washer–Lock

Ref. No.	Part No.	Qty.	Description
26	103–0131	8	Nut–Square
27	1–633102	4	Bearing–Flange, Side
28	3290–357	8	Nut–HHF
29	103–3116	1	Shaft–Brake, Parking
30	1–653061	1	Linkage–Handle, Brake
31	1481	2	Fitting–Grease
32	98–5975	1	Washer–Belleville
33	1–523157	2	Washer–Spacer
34	1–523328	2	Motor–Wheel
34:1	1–809036	1	Nut–HH
34:2	3257–42	1	Key–Woodruff
*34:99	103–2748	1	Drive Link Kit
*34:99	1–000139	1	Bearing Kit
*34:99	1–000099	1	Seal Kit
35	32151–48	1	E–Ring
36	3256–28	1	Washer–Flat

* Not illustrated

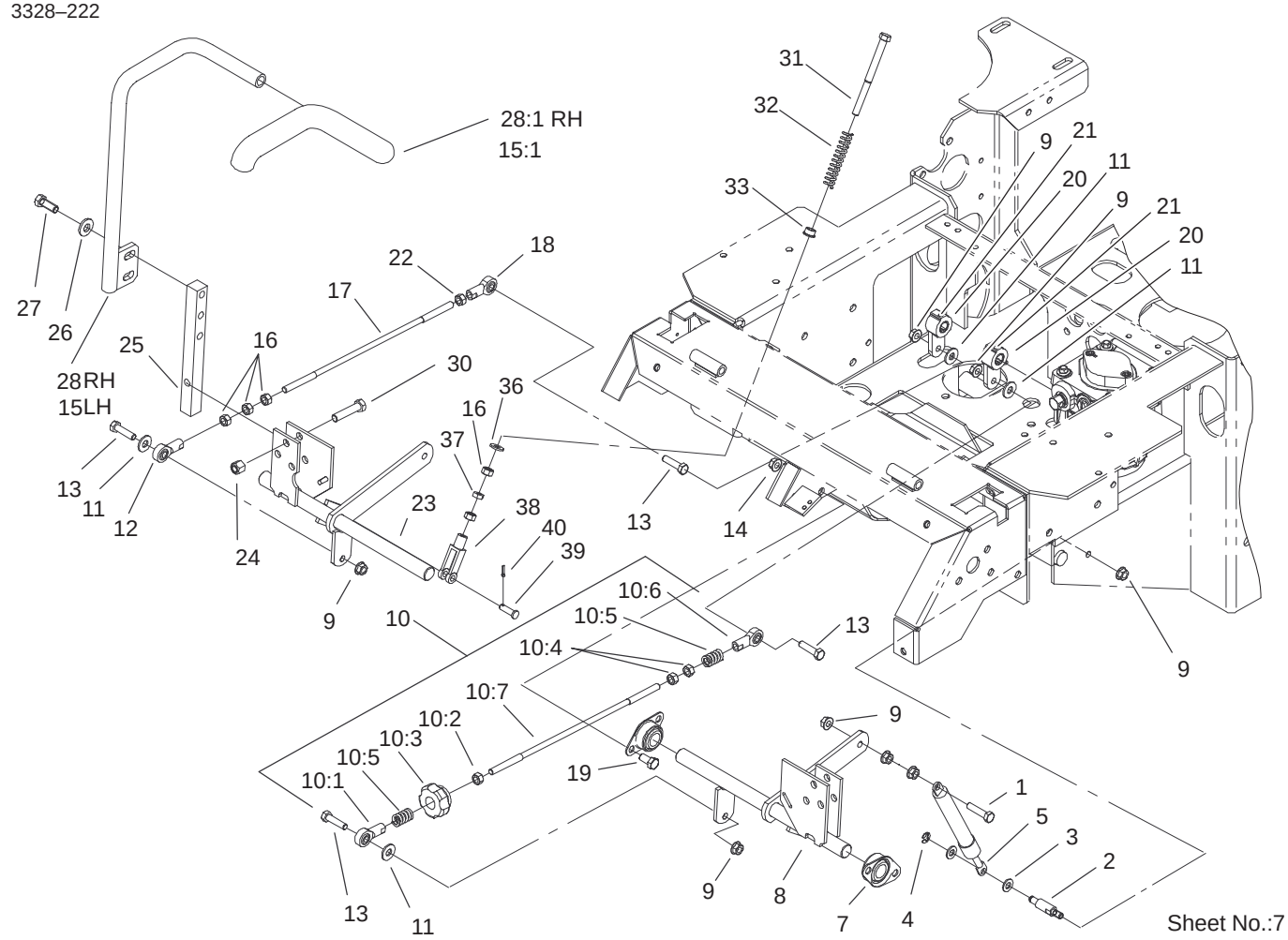

Motion Control System Assembly

Ref. No.	Part No.	Qty.	Description
1	1–403180	2	Screw–HH
2	1–653316	2	Pin–Damper
3	3256–23	4	Washer–Flat
4	32120–35	2	E–Ring
5	103–2913	2	Damper–Control, Motion
7	1–633102	4	Bearing–Flange, Side
8	103–2199	1	LH Motion Control ASM
9	32128–20	12	Nut–HF
10	103–3063	1	ASM,Tracking Rod Lhp
10:1	1–543017	1	Balljoint–RH
10:2	3219–2	1	Nut–Hex
10:3	103–3060	1	Knob–Tracking
10:4	1–804524	2	Nut
10:5	1–323245	2	Spring–Compression
10:6	1–633152	1	Balljoint–Thread, LH
10:7	103–3066	1	Link–Rod, Tracking
11	3256–3	4	Washer–Flat
12	1–543017	1	Balljoint–RH
13	322–6	4	Screw–HH
14	3290–357	8	Nut–HHF
15	103–0631	1	LH Lever ASM
15:1	1–633257	1	Grip–Control, Motion
16	3219–2	7	Nut–Hex

Ref. No.	Part No.	Qty.	Description
17	1–653046	1	Linkage–Pump/Lever
18	1–633152	1	Balljoint–Thread, LH
19	323–4	8	Screw–HH
20	1–653092	2	Arm–Control, Pump
21	1–803022	2	Screw–Set
22	1–804524	1	Nut
23	103–2200	1	RH Motion Control ASM
24	3296–39	6	Nut–Lock, NI
25	103–0407	2	Arm–Shaft, Control
26	98–5975	4	Washer–Belleville
27	323–6	4	Screw–HH
28	103–0632	1	RH Lever ASM
28:1	1–633257	1	Grip–Control, Motion
30	323–9	6	Screw–HH
31	1–603737	2	Bolt–Return, Neutral
32	1–603807	2	Spring–Return, Neutral
33	1–603735	2	Bushing–Flanged
36	3256–2	2	Washer–Flat
37	3220–2	2	Nut
38	1–303105	2	Yoke–Adjustable
39	1–808280	2	Pin–Clevis
40	3272–5	2	Pin–Cotter

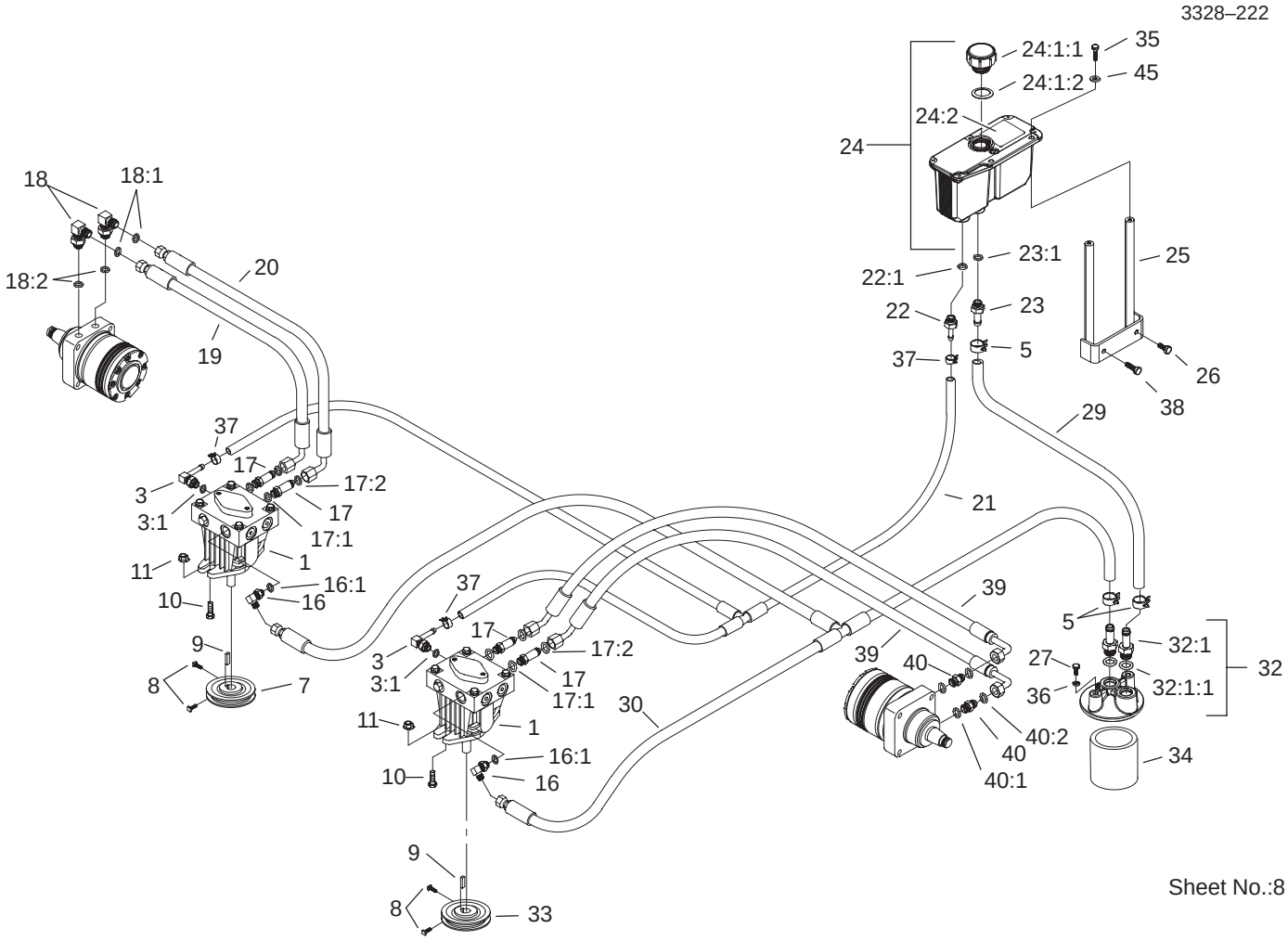

Hydraulic System Assembly

Ref. No.	Part No.	Qty.	Description
1	103–1942	2	Pump–Hydraulic
*1:1	105–6184	1	Seal Overhaul Kit
*1:2	105–6185	1	Plate–Valve
*1:8	103–2664	1	Input Shaft Kit
*1:9	103–2665	1	Thrust Bearing Kit
*1:10	103–2666	1	Cylinder Block Kit
*1:14	106–2053	1	Shock Valve Kit
3	103–1799	2	Elbow–90°
3:1	237–42	1	O–Ring
5	103–1988	3	Clamp–Hose
7	1–653156	2	Sheave
8	1–803050	4	Screw–Set
9	1–807272	2	Key
10	323–7	4	Screw–HH
11	3290–357	4	Nut–HHF
16	103–1802	2	Elbow–HYD, 90°
16:1	237–42	1	O–Ring
17	103–1940	4	Adapter–HYD, Straight
17:1	237–79	1	O–Ring
17:2	1–603992	1	O–Ring
18	1–633605	2	Fitting–HYD, 90°
18:1	1–603992	1	O–Ring
18:2	237–80	1	O–Ring
19	1–653186	1	Hose–Front
20	1–653187	1	Hose–RH, Rear
21	103–2357	1	Hydraulic Hose ASM

Ref. No.	Part No.	Qty.	Description
22	103–1801	1	Adapter–Straight
22:1	237–42	1	O–Ring
23	103–1912	1	Adapter–Straight
23:1	237–42	1	O–Ring
24	103–1947	1	HYD Reservoir ASM
☆24:1		1	Reservoir–HYD
24:1:1	103–1948	1	Cap–Reservoir, HYD
24:1:2	103–1949	1	Gasket–Cap
24:2	1–523552	1	Decal–Tank, HYD
25	103–2644	1	Decal–Exhaust
25	103–3071–03	1	Stand–Reservoir
26	322–3	1	Screw–HH
27	321–3	2	Screw–HH
29	103–3077	1	Hydraulic Hose ASM
30	103–2930	1	Hydraulic Hose ASM
32	103–2889	1	Filter Head ASM
32:1	103–1912	2	Adapter–Straight
32:1:1	237–42	1	O–Ring
33	32128–20	2	Nut–HF
34	1–633750	1	Filter–HYD
34	1–633752	1	Filter–HYD, Winter
35	321–6	2	Screw–HH
36	1–805004	2	Washer–Lock
37	103–1716	3	Clamp–Hose
38	322–5	1	Screw–HH
39	103–1680	2	Hose–LH

* Not illustrated
☆ Not serviced separately

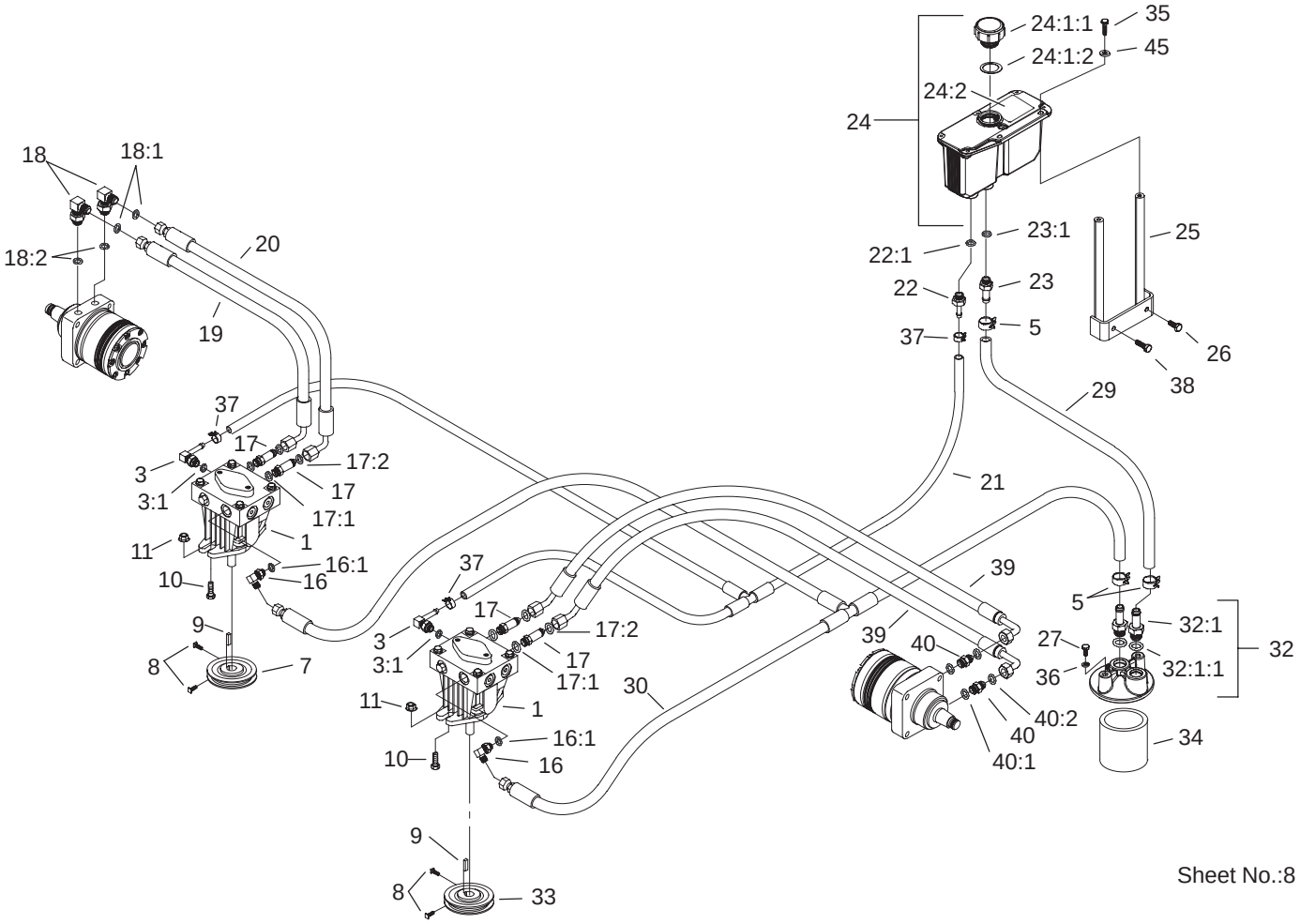

Hydraulic System Assembly (Continued)

Ref. No.	Part No.	Qty.	Description
40	1–603991	2	Fitting–Straight
40:1	237–80	1	O–Ring
40:2	1–603992	1	O–Ring
45	3256–22	2	Washer–Flat

Ref. No.	Part No.	Qty.	Description

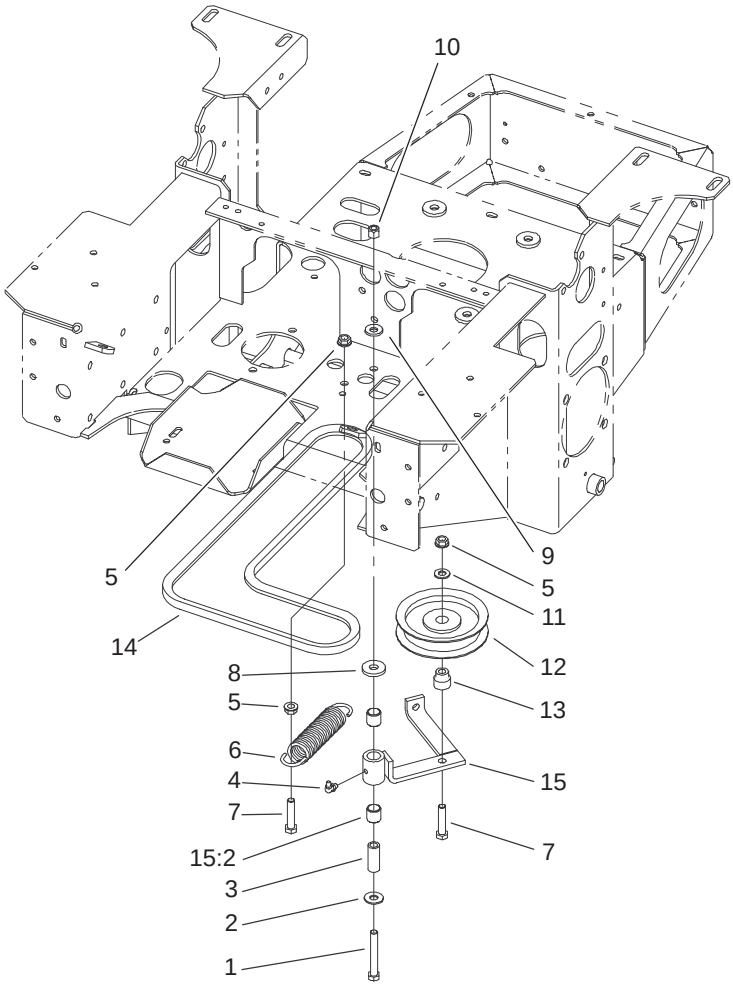

Sheet No.:9

Pump, Idler and Belt Assembly

Ref. No.	Part No.	Qty.	Description
1	323–13	1	Screw–HH
2	3256–4	1	Washer–Flat
3	1–603044	1	Bushing
4	302–40	1	Fitting–Grease
5	3290–357	3	Nut–HHF
6	103–1767	1	Spring–Extension
7	323–9	2	Screw–HH
8	1–373034	1	Washer
9	98–5975	1	Washer–Belleville
10	3296–39	1	Nut–Lock, NI
11	3256–24	1	Washer–Flat
12	1–603843	1	Pulley–Idler
13	1–603496	1	Bushing–Idler
14	1–653283	1	Belt–Pump
15	1–654143	1	Idler Arm
15:2	1–513034	2	Sleeve–Bearing

Ref. No.	Part No.	Qty.	Description

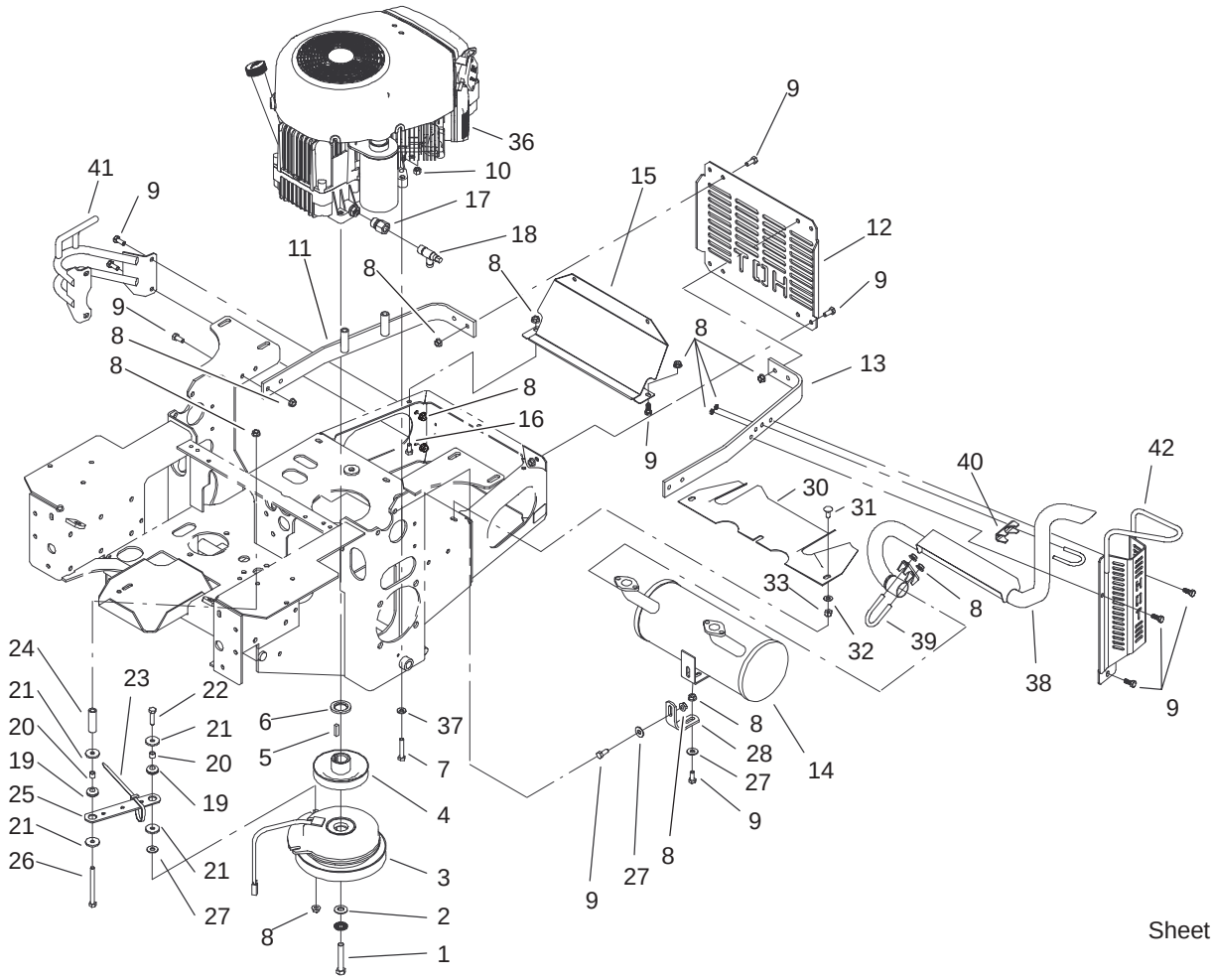

Sheet No.:10

Engine and Clutch Assembly

Ref. No.	Part No.	Qty.	Description
1	3212–12	1	Screw–HH
2	1–603610	2	Washer–Spring
3	103–0690	1	Clutch
4	1–653035	1	Sheave W/Hub
5	1–807259	1	Key
6	103–2308	1	Spacer–Crankshaft
7	322–9	4	Screw–HH
8	32128–20	27	Nut–HF
9	322–3	21	Screw–HH
10	3296–29	4	Nut–Lock, NI
11	103–3078–03	1	Strap–Guard, Engine RH
12	1–653095–03	1	Shield–Engine
13	103–2751–03	1	Strap–Guard, Engine LH
14	103–1322	1	Muffler
15	103–2560–03	1	Shield–Heat
16	322–2	4	Screw–HH
17	103–1966	1	Adapter
18	103–1965	1	Valve–Drain, Oil
19	1–633630	2	Grommet–Brake
20	1–633545	2	Spacer–Grommet
21	1–613235	4	Washer
22	322–6	1	Screw–HH
23	1–303335	2	Tie–Plastic
24	103–2614	1	Spacer

Ref. No.	Part No.	Qty.	Description
25	1–633543–03	1	Strap–Clutch, Brake
26	322–22	1	Screw–HH
27	3256–3	3	Washer–Flat
28	1–653196	1	Bracket–Support, Muffler
30	1–653539–03	1	Shield–Heat
31	3230–1	3	Screw–CARR
32	3256–23	3	Washer–Flat
33	3296–29	3	Nut–Lock, NI
☆36		1	Engine–Kawasaki, Fh601v–Ds06
37	1–303334	2	Washer–Spring
38	103–2599	1	Tailpipe
39	103–2630	1	Clamp
40	103–2631	1	Clamp
41	103–2564–03	1	RH Exhaust Guard ASM
42	103–2566–03	1	LH Exhaust Guard ASM

☆ Not serviced separately

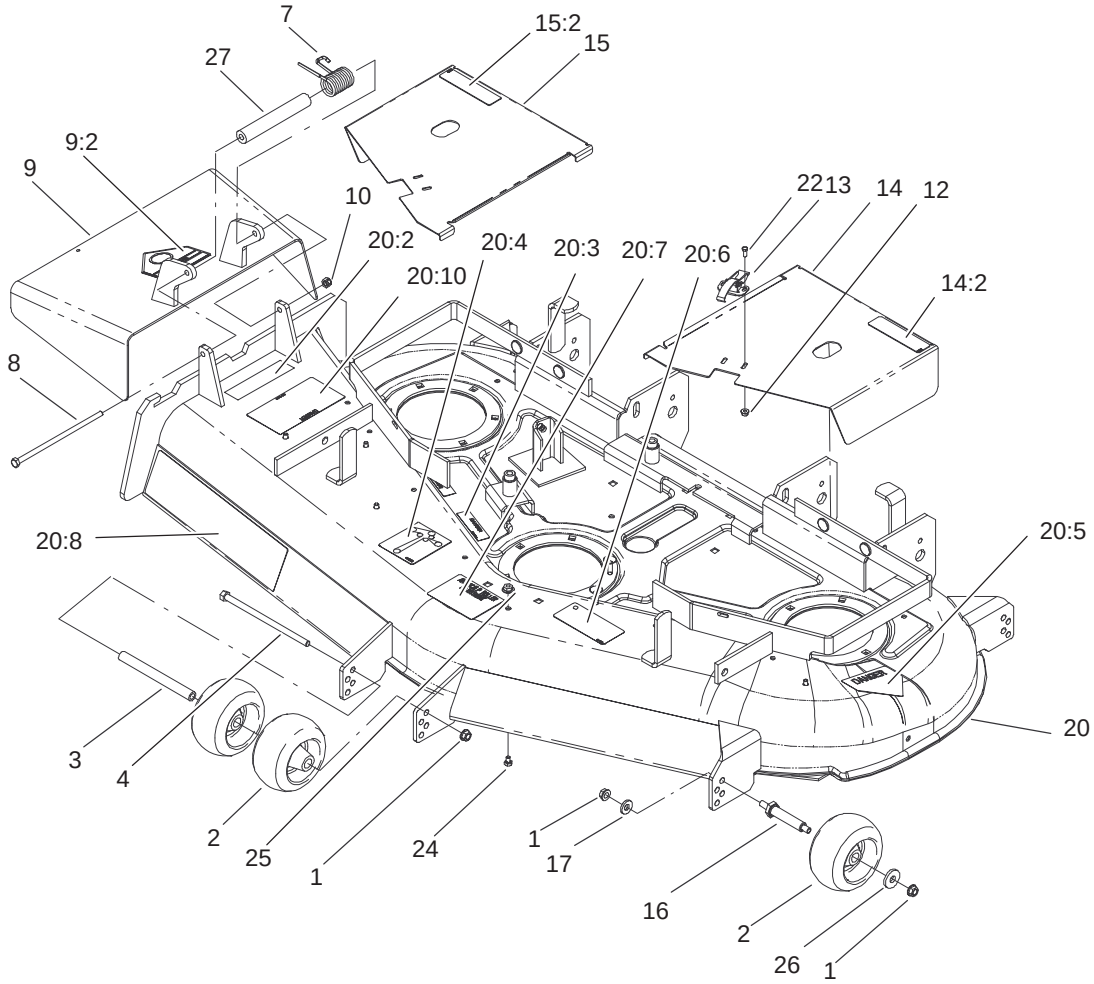

Sheet No.:14

Deck Assembly

Ref. No.	Part No.	Qty.	Description
1	3290–357	9	Nut–HHF
2	68–2730	6	Wheel–Gage
3	98–5967	1	Spacer
4	323–28	1	Screw–HH
7	104–8554	1	Spring–Torsion
8	322–50	1	Screw–HH
9	105–4623	1	Deflector ASM
9:2	93–1122	1	Decal–Danger
10	3296–29	1	Nut–Lock, NI
12	32128–17	4	Nut–Lock, Flange
13	249–21	2	Clamp–Slotted
14	99–3896	1	LH Cover ASM
14:2	67–5360	1	Decal–Danger
15	99–3895	1	RH Cover ASM
15:2	67–5360	1	Decal–Danger
16	99–2842	4	Spacer
17	98–5975	4	Washer–Belleville
☆20	106–5875	1	Z100/52” Deck ASM W/Decals
20:2	104–8569	1	Decal–Warning
20:3	98–5954	3	Decal–Missing, Cover
20:4	99–3943	1	Decal–Routing, Belt
20:5	43–8480	1	Decal–Danger
20:6	93–7818	1	Decal–Torque, Blade Bolt
20:7	98–3798	1	Decal–Wheel, Gage

Ref. No.	Part No.	Qty.	Description
20:8	98–5953	1	Decal–Sfs
20:10	66–1340	1	Decal–Danger
22	3290–321	4	Screw–HWH
24	321–1	6	Screw–HH
25	32128–33	6	Nut–HF
26	1–373034	4	Washer
27	105–4622	1	Spacer

☆ Not serviced separately

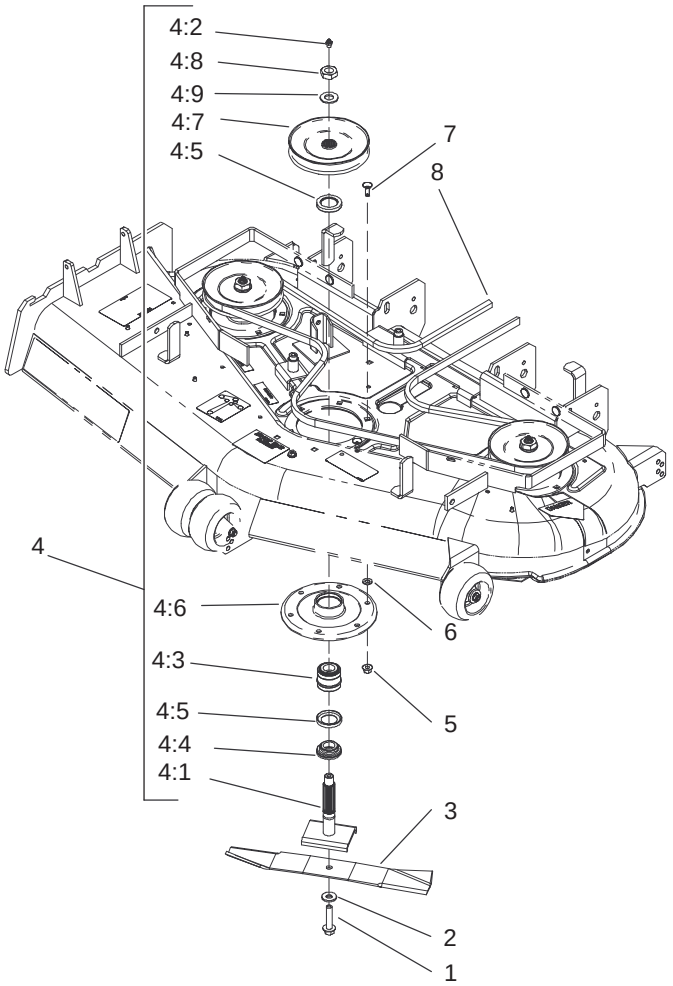

Sheet No.:15

Deck Spindle Assembly

Ref. No.	Part No.	Qty.	Description
1	92–5816	3	Bolt–Blade
2	1–513435	3	Washer–Spring
3	56–2390	3	Blade
4	100–3976	3	Spindle Housing ASM
4:1	100–3972	1	Spindle Shaft ASM
4:2	302–2	1	Fitting–Grease
4:3	46–8530	1	Bearing ASM
4:4	27–0950	1	Spacer
4:5	253–139	2	Seal–Oil
4:6	61–4160	1	Housing
4:7	100–3970	1	Pulley And Hub ASM
4:8	32146–20	1	Nut–Jam
4:9	7–4150	1	Washer
5	32128–21	18	Nut–HF
6	3256–24	6	Washer–Flat
7	3231–22	18	Screw–CARR
8	99–3904	1	Belt–Deck

Ref. No.	Part No.	Qty.	Description

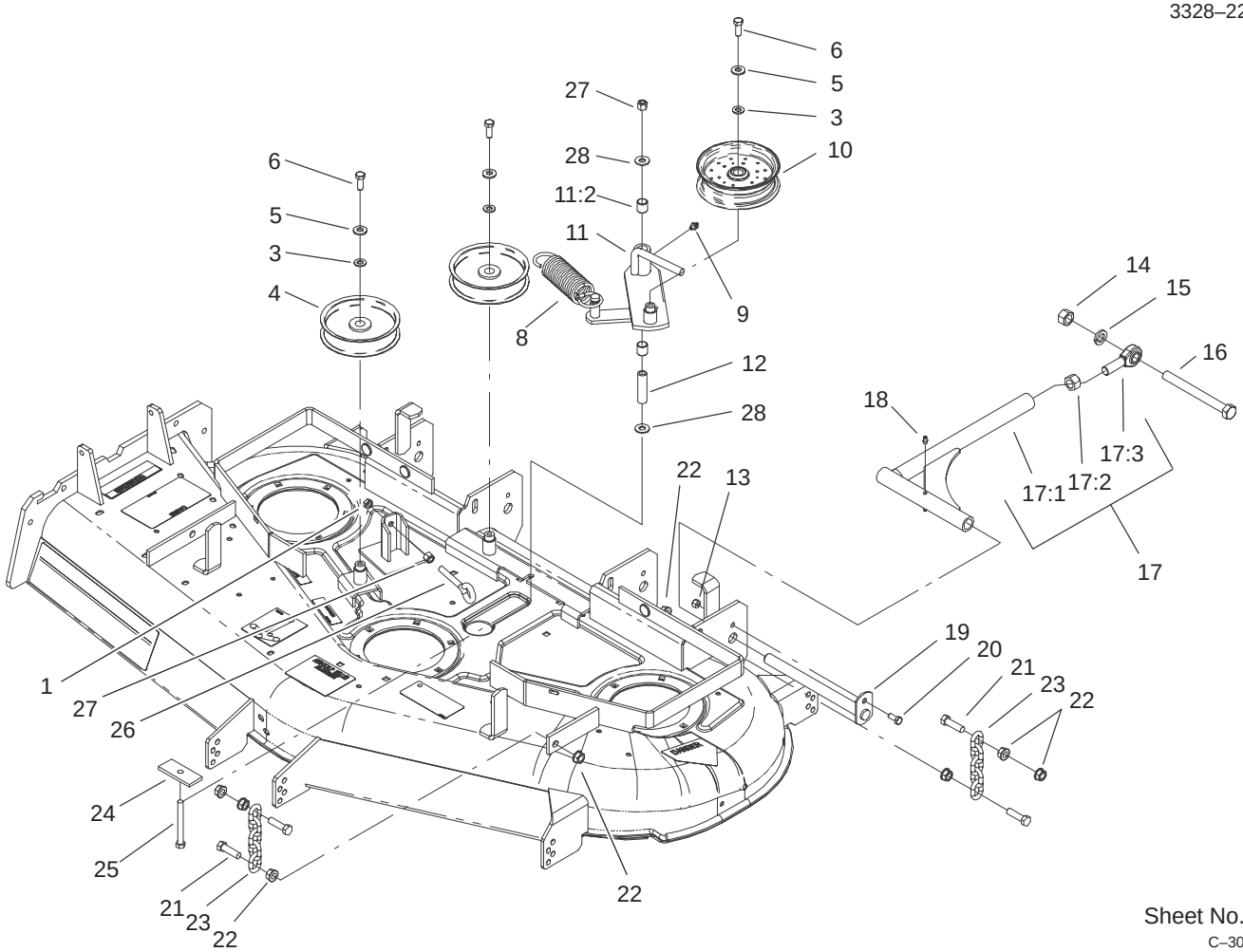

Sheet No.:16
C–3040

Idler, Pulley/Lift Strut, Chain Assembly

Ref. No.	Part No.	Qty.	Description
1	3217–7	1	Nut–Hex
3	3256–24	3	Washer–Flat
4	1–613098	2	Pulley–Idler
5	98–5975	3	Washer–Belleville
6	323–6	3	Screw–HH
8	1–633151	1	Spring–Extension
9	302–40	1	Fitting–Grease
10	1–413099	1	Pulley–Idler
11	99–3879	1	Idler Arm ASM
11:2	1–513034	2	Sleeve–Bearing
12	1–603384	1	Bushing–Pivot, Idler
13	3296–29	2	Nut–Lock, NI
14	3217–11	2	Nut–Hex
15	3253–8	2	Washer–Lock
16	1–800344	2	Screw
17	103–1081	2	Strut ASM
17:1	103–1072–01	1	Strut–Deck
17:2	3219–6	1	Nut–Hex
17:3	1–633029	1	Balljoint–Spherical
18	302–19	4	Fitting–Grease
19	1–632199–01	2	Pin–Strut, Deck
20	322–3	2	Screw–HH
21	1–800811	8	Screw–Cap, HH
22	32128–37	16	Nut–HF
23	1–633447	4	Chain–Lift, Deck
24	99–3946–01	1	Plate–Retainer, Bolt

Ref. No.	Part No.	Qty.	Description
25	1–800805	1	Screw–HH
26	94–2547	1	Bolt–Eye
27	3296–39	2	Nut–Lock, NI
28	1–809107	2	Washer–Hardened

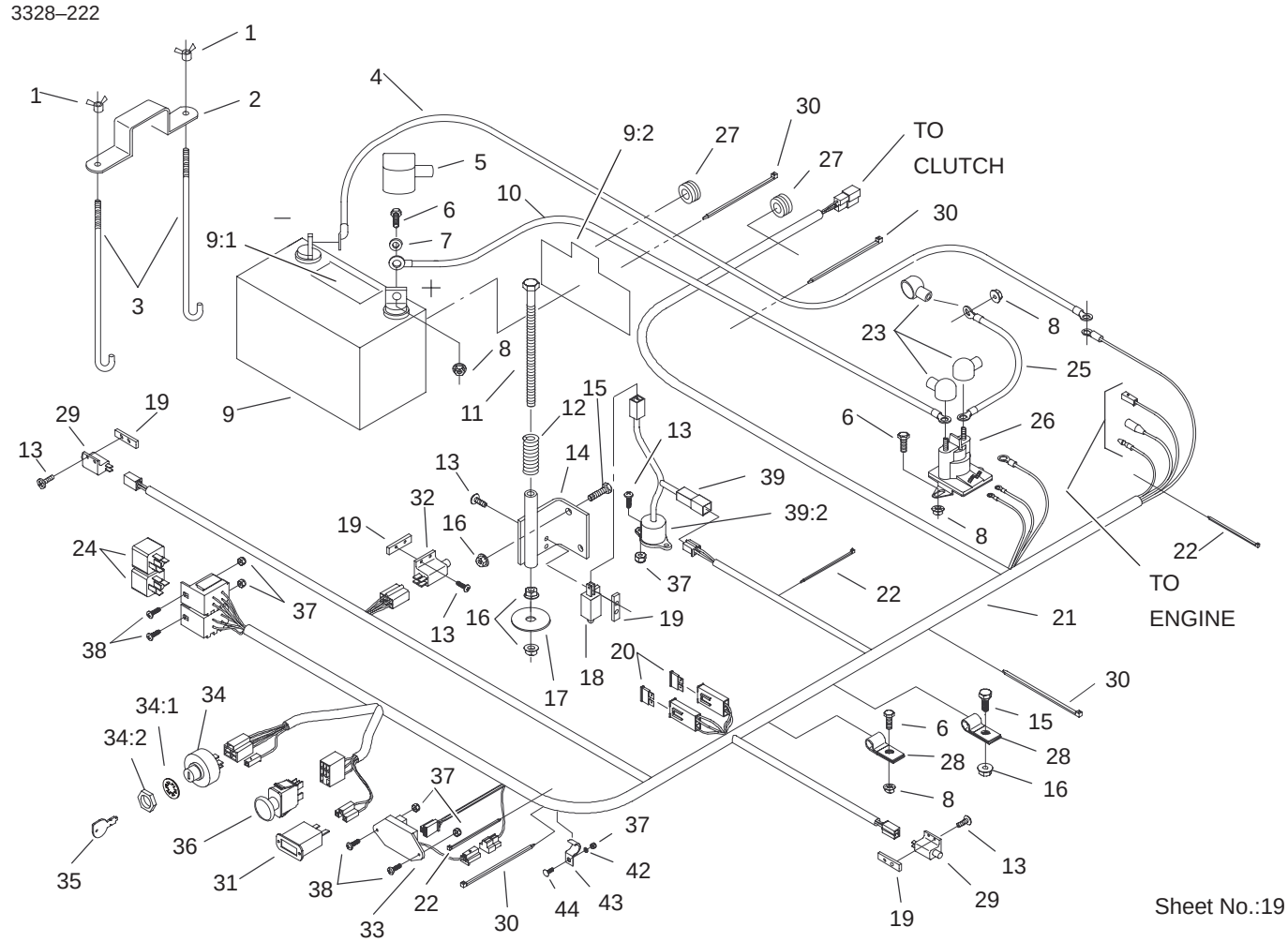

Electrical System Assembly

Ref. No.	Part No.	Qty.	Description
1	1–543792	2	Wingnut
2	1–633652–03	1	Strap–Holddown
3	1–633651	2	Bolt–Holddown
4	103–0705	1	Cable–Ground, Negative
5	1–543391	1	Insulator–Battery
6	321–4	5	Screw–HH
7	3256–2	2	Washer–Flat
8	32128–33	6	Nut–HF
9	105–1692	1	Battery
9:1	104–4163	1	Decal–Battery
9:2	104–4164	1	Decal–Battery
10	103–0707	1	Cable–Battery, Positive
11	1–800282	1	Screw–HH
12	1–523415	1	Spring–Switch, Seat
13	3290–500	10	Screw–PPH
14	1–652072–03	1	Bracket–Switch, Seat
15	322–3	3	Screw–HH
16	32128–20	5	Nut–HF
17	1–653036	1	Washer
18	1–513152	1	Switch–Closed, Normally
19	1–633181	4	Plate–Tapped
20	1–816001	2	Fuse–Type, Blade
21	103–0623	1	Harness–Wire

Ref. No.	Part No.	Qty.	Description
22	1–303287	3	Tie–Plastic
23	1–543393	3	Insulator–Solenoid
24	1–643275	2	Relay
25	1–633306	1	Wire–Starter
26	1–513075	1	Switch–Solenoid
27	1–543286	2	Grommet
28	1–633396	2	Clip–Loom
29	1–513051	2	Switch–Open, Normally
30	1–303335	4	Tie–Plastic
31	1–513374	1	Meter–Hour
32	1–633111	1	Switch
33	100–6186	1	Module–Delay, Seat
34	88–9830	1	Key Switch ASM
34:1	3254–5	1	Washer–Lock, Internal
34:2	218–461	1	Nut–HH
35	63–8360	2	Key–Ignition
36	1–633673	1	Switch–Delta
37	3296–2	7	Nut–Lock
38	1–807513	4	Bolt–CARR
39	1–644427	1	Tilt Switch ASM
39:2	1–643401	1	Decal–Switch, Mercury
42	3256–14	1	Washer–Flat
43	103–1193	1	Clip–Half, Loom
44	1–807533	1	Bolt–CARR

Electrical Schematic

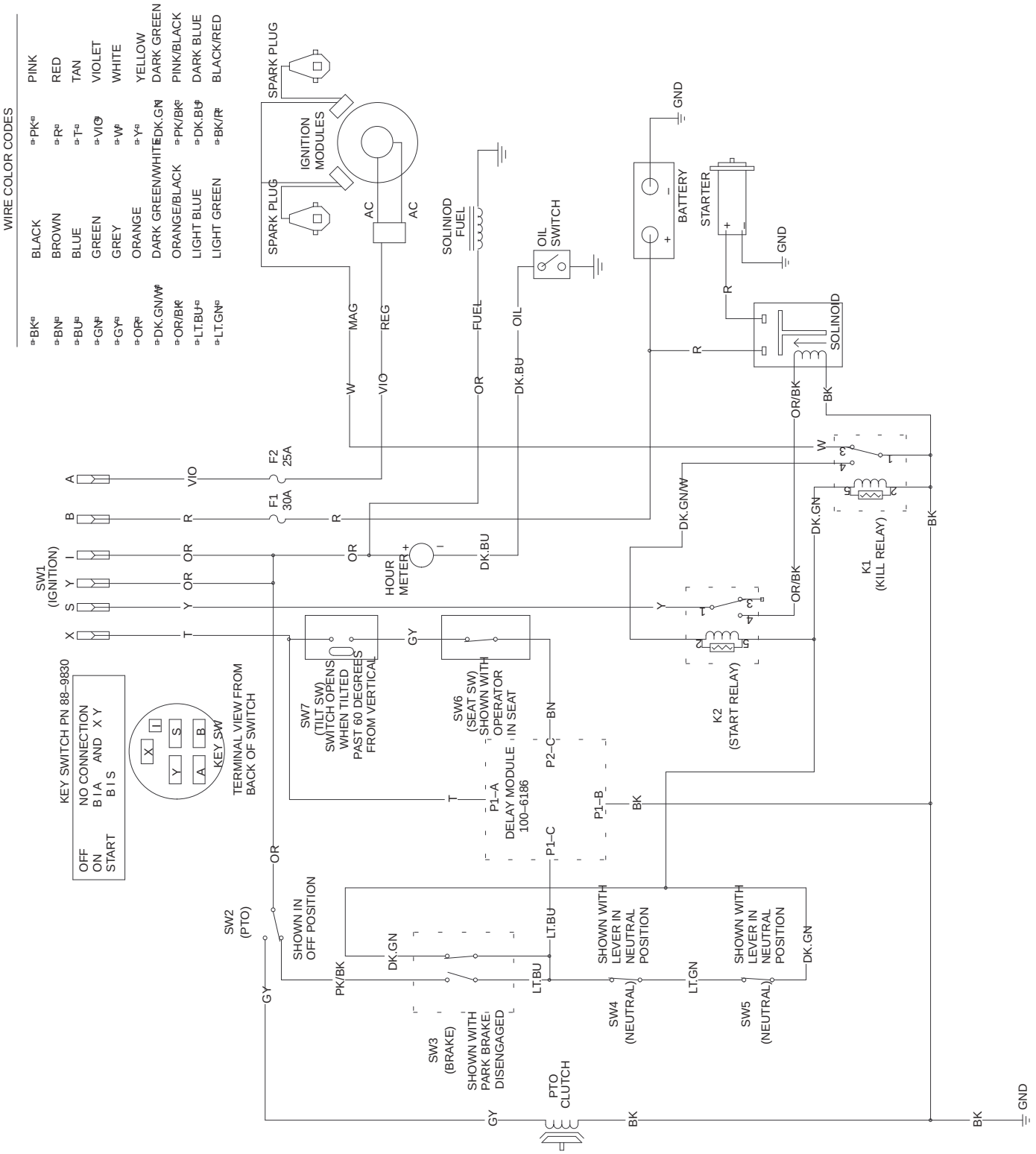

Cylinder/Crankcase Assembly Kawasaki FH601V–DS06

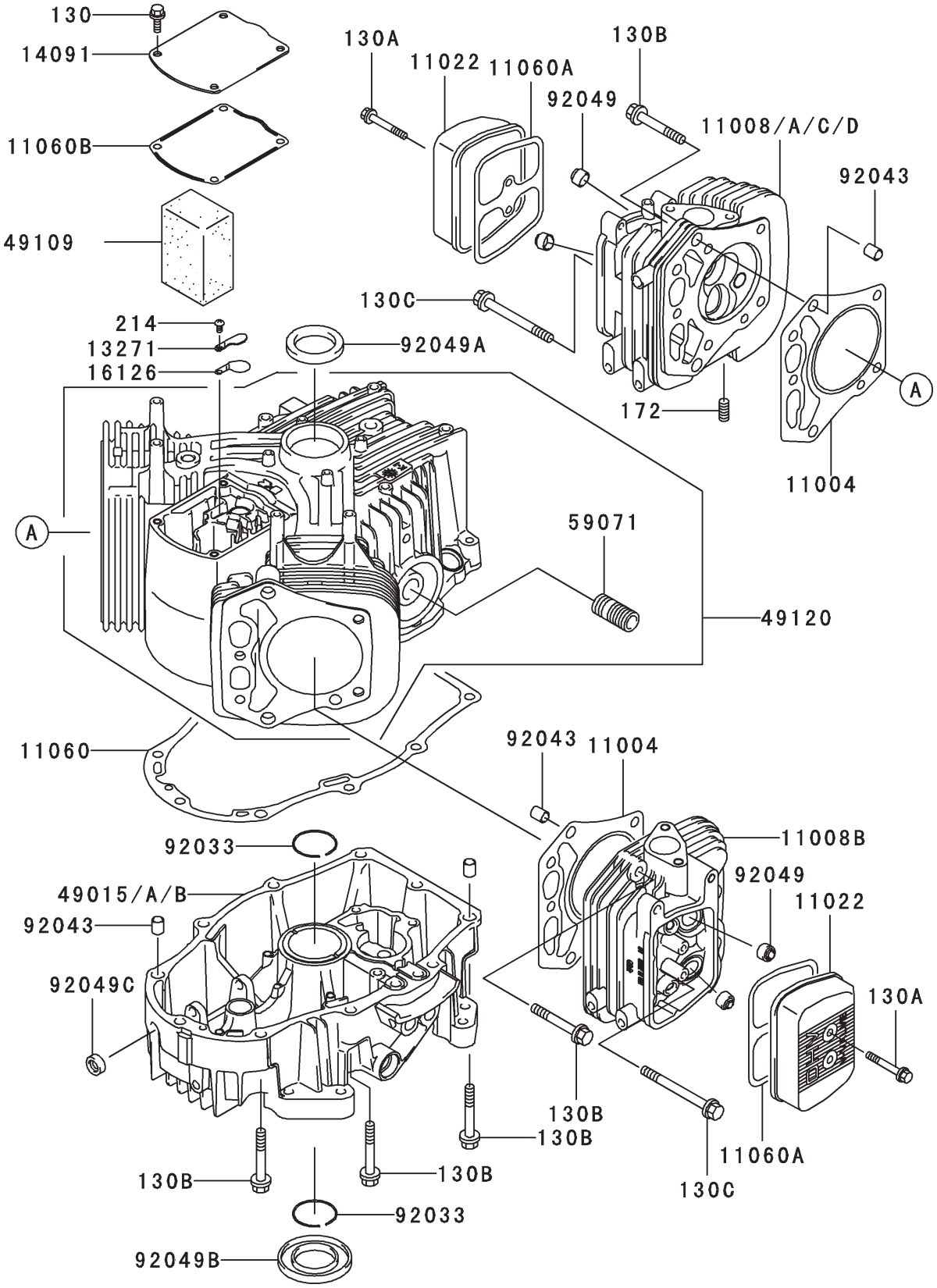

Cylinder/Crankcase Assembly Kawasaki FH601V–DS06

Ref. No.	Part No.	Qty.	Description
11004	11004–7004	2	Gasket–Head
11008	11008–7007	1	Head–Comp–Cylinder No. 1
11008A	11008–7004	1	Head–Comp–Cylinder No. 2
11022	11022–7002	2	Case–Rocker
11060	11060–7012	1	Gasket, CrankCase Cover
11060A	11060–7013	2	Gasket, Rocker Case
11060B	11060–7014	1	Gasket, Breather
13271	13271–7006	1	Plate
14090	14091–7004	1	Cover
16126	16126–7001	1	Valve
49015	49015–6225	1	Cover–Crankcase
49109	49109–7003	1	Element–Breather
49120	49120–6130	1	Crankcase–Comp
59071	59071–2079	1	Joint
92033	92033–7004	2	Ring–Snap
92043	92043–7001	6	Pin
92049	92049–7001	4	Seal–Oil
92049A	92049–7002	1	Seal–Oil
92049B	92049–7004	1	Seal–Oil
92049C	92049–7005	1	Seal–Oil
130	130B0612	4	Bolt–Flanged
130A	130B0640	4	Bolt–Flanged
130B	130T0850	18	Bolt–Flanged
130C	130T0875	2	Bolt–Flanged
172	172G0818	4	Bolt–Stud
214	214B0408	1	Screw–Pan

Ref. No.	Part No.	Qty.	Description

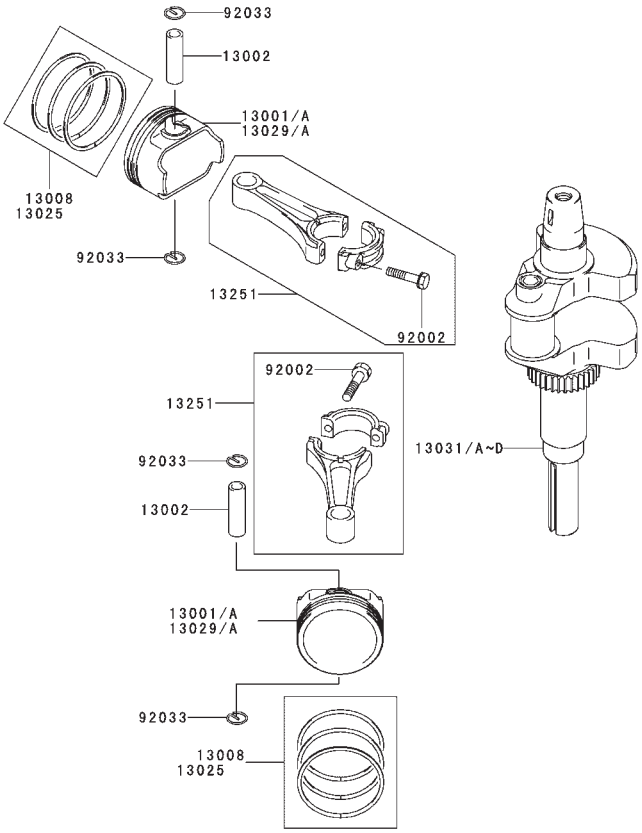

Piston/Crankshaft Assembly Kawasaki FH601V–DS06

Ref. No.	Part No.	Qty.	Description
13001	13001–7007	2	Piston–Engine
13002	13002–7001	2	Pin–Piston
13008	13008–6058	2	Ring–Set–Piston
13025	13025–7002	A/R	Ring–Set–Piston L, 0.50
13029A	13029–7003	A/R	Piston–Engine L, 0.50
13031	13031–7015	1	Crankshaft–Comp
13251	13251–7006	2	Rod–Assy–Connecting
92002	92002–2053	4	Bolt
92033	92033–7005	4	Ring–Snap

Ref. No.	Part No.	Qty.	Description

Valve/Camshaft Assembly Kawasaki FH601V–DS06

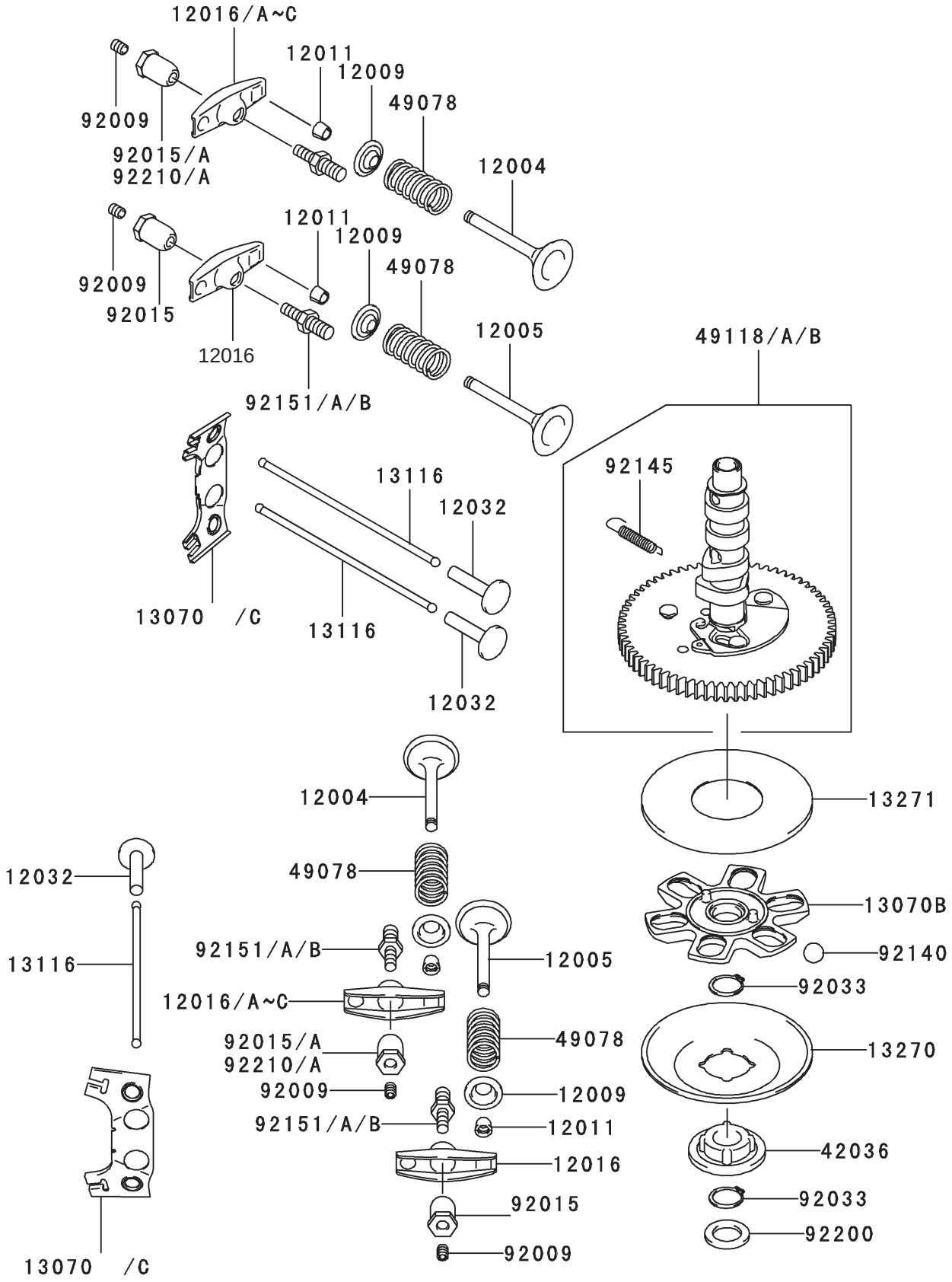

Valve/Camshaft Assembly Kawasaki FH601V–DS06

Ref. No.	Part No.	Qty.	Description
12004	12004–7002	2	Valve–Intake
12005	12005–7002	2	Valve–Exhaust
12009	12009–7001	4	Retainer–Valve Spring
12011	12011–2056	8	Collet
12016	12016–7006	4	Arm–Rocker
12032	12032–7001	4	Tappet
13070	13070–7004	1	Guide
13070A	13070–7007	2	Guide
13116	13116–7002	4	Rod–Push
13270	13270–7002	1	Plate
13271	13271–7007	1	Plate
42036	42036–7001	1	Sleeve
49078	49078–7002	4	Spring–Engine Valve
49118	49118–7007	1	Camshaft–Comp
92009	92009–2341	4	Screw
92015	92015–2253	4	Nut
92033	92033–7001	2	Ring–Snap
92140	92140–7002	6	Ball
92145	92145–7001	1	Spring
92151	92151–7019	4	Bolt
92200	92200–7001	1	Washer

Ref. No.	Part No.	Qty.	Description

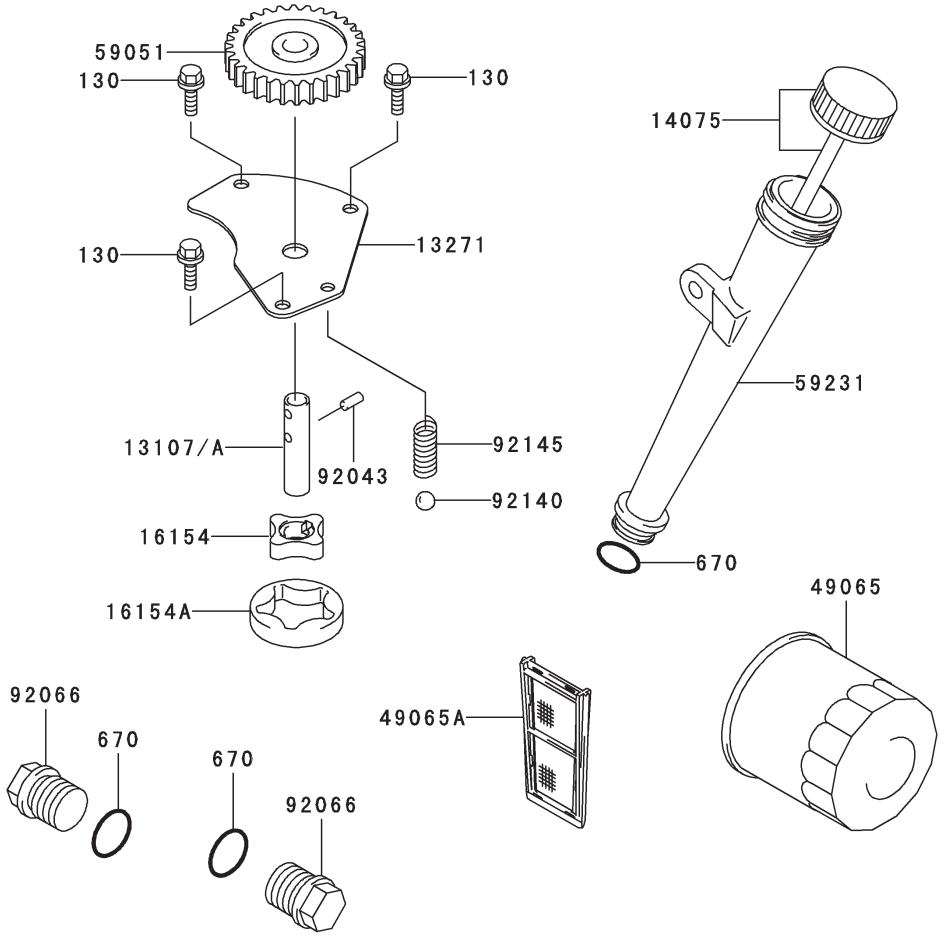

Lubrication Equipment Assembly Kawasaki FH601V–DS06

Ref. No.	Part No.	Qty.	Description
13107	13107–7009	1	Shaft, Oil Pump
13271	13271–7005	1	Plate
14075	14075–7002	1	Cap–Assy
16154	16154–2053	1	Rotor–Pump, In
16154A	16154–2054	1	Rotor–Pump, Out
49065	49065–2078	1	Filter–Oil
49065A	49065–7003	1	Filter–Oil
59051	59051–7004	1	Gear–Spur
59071	59071–7003	1	Joint
59231	59231–7002	1	Filler
92043	92043–7003	1	Pin
92066	92066–7003	2	Plug
92140	92140–7003	1	Ball
92145	92145–7002	1	Spring
130	130B0612	3	Bolt–Flanged
670	670D2016	4	O–Ring, 16mm

Ref. No.	Part No.	Qty.	Description

Cooling Equipment Assembly Kawasaki FH601V–DS06

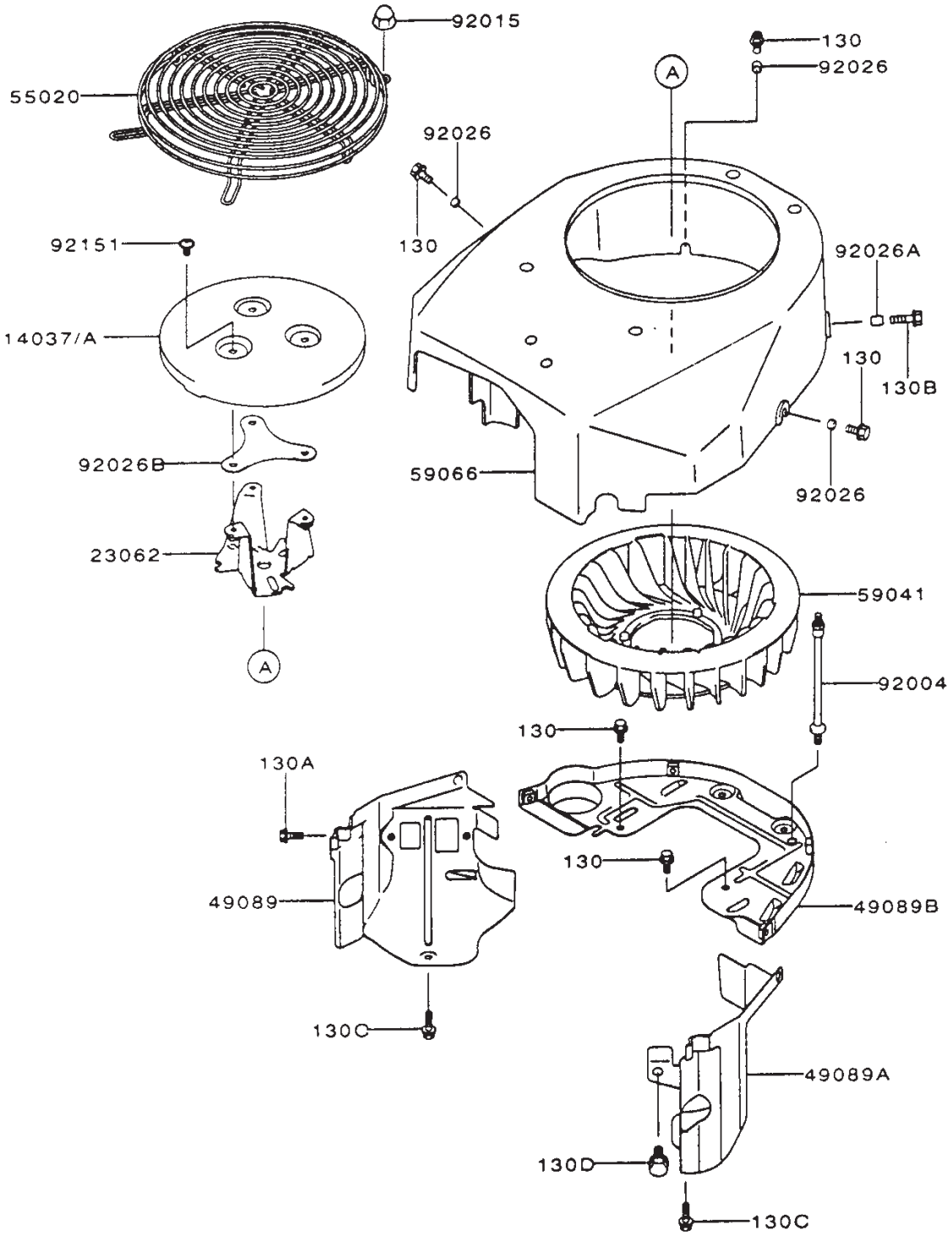

Cooling Equipment Assembly Kawasaki FH601V–DS06

Ref. No.	Part No.	Qty.	Description
13270	13270–7007	1	Plate
14037	14037–7008–9H	1	Screen
14091	14091–7002	1	Cover
23062	23062–7005	1	Bracket–Comp
49089	49089–7004	1	Shroud–Engine
49089A	49089–7005	1	Shroud–Engine
49089B	49089–7006	1	Shroud–Engine
55020	55020–7002	1	Guard
59041	59041–7003	1	Fan
59066	59066–7004	1	Housing–Fan
92004	92004–2148	2	Stud
92009	92009–7008	3	Screw 6 x 10
92015	92015–1170	4	Nut
92026	92026–7001	3	Spacer, 6.2x7.9x5
92026A	92026–7003	1	Spacer, 6.5x7.9x10.5
92026C	92026–7007	A/R	Spacer
92200	92200–2078	1	Washer–6.5x18x2.0
130	130B0612	9	Bolt–Flanged
130A	130B0620	1	Bolt–Flanged
130B	130B0816	1	Bolt–Flanged

Ref. No.	Part No.	Qty.	Description

Electric Equipment Assembly Kawasaki FH601V–DS06

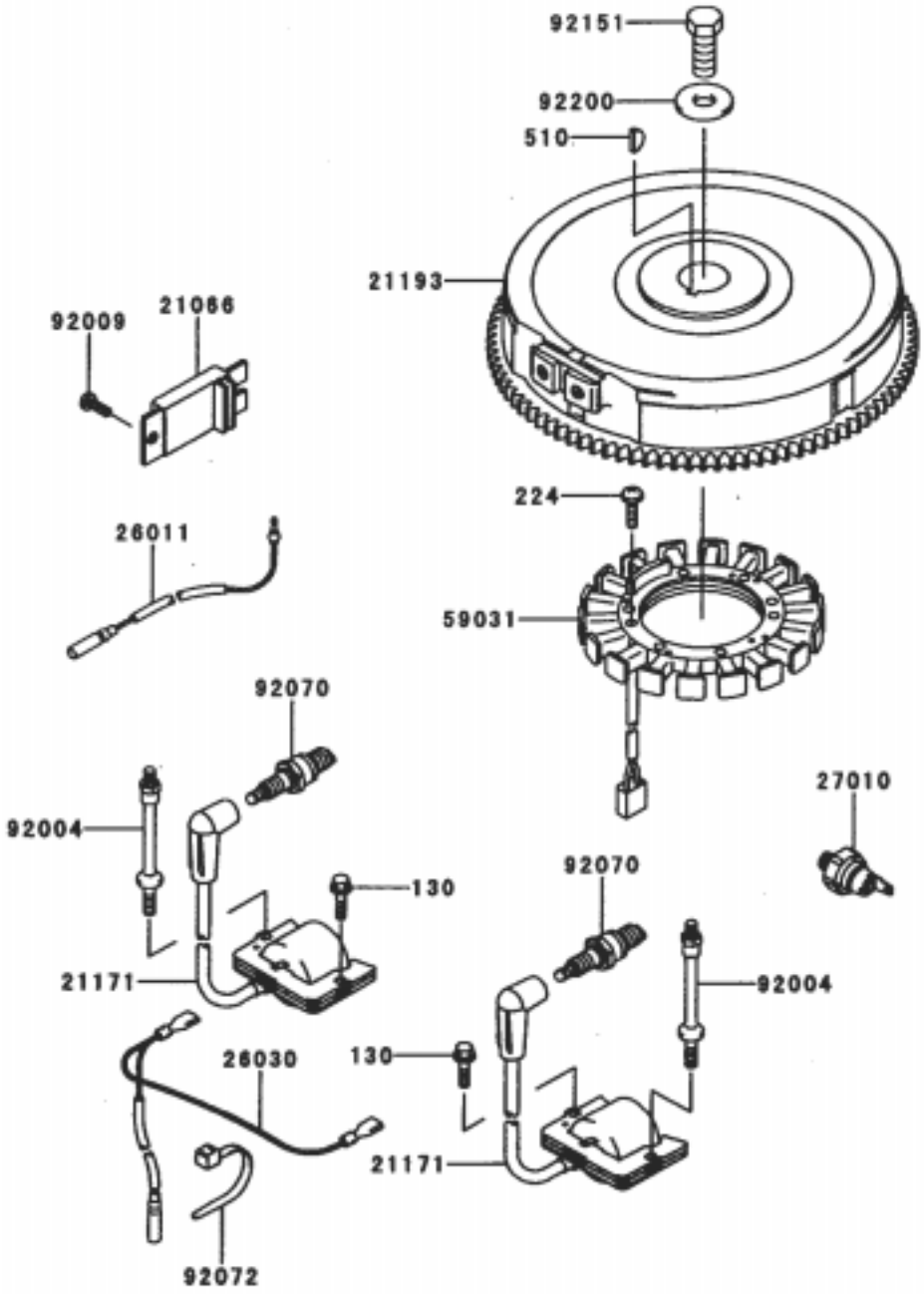

Electric Equipment Assembly Kawasaki FH601V–DS06

Ref. No.	Part No.	Qty.	Description
21066	21066–7003	1	Regulator–Voltage
21171	21171–7001	2	Coil–Assy–Ignition
21193	21193–7012	1	Flywheel–Assy
26011	26011–7008	1	Wire–Lead
26030	26030–7002	1	Harness
27010	27010–7001	1	Switch
59031	59031–7001	1	Coil–Charging
92004	92004–2147	2	Stud
92009	92009–2308	1	Screw
92070	92070–7004	2	Plug–Spark, BPR5ES (NGK, Solid)
92072	92072–7003	2	Band
92151	92151–2097	1	Bolt, 12x30
92220	92220–7002	1	Washer
130	130B0620	1	Bolt–Flanged
224	224B0520	4	Screw–Pan–WP–Cross
510	510A5100	1	Key–Woodruff

Ref. No.	Part No.	Qty.	Description

Control Equipment Assembly Kawasaki FH601V–DS06

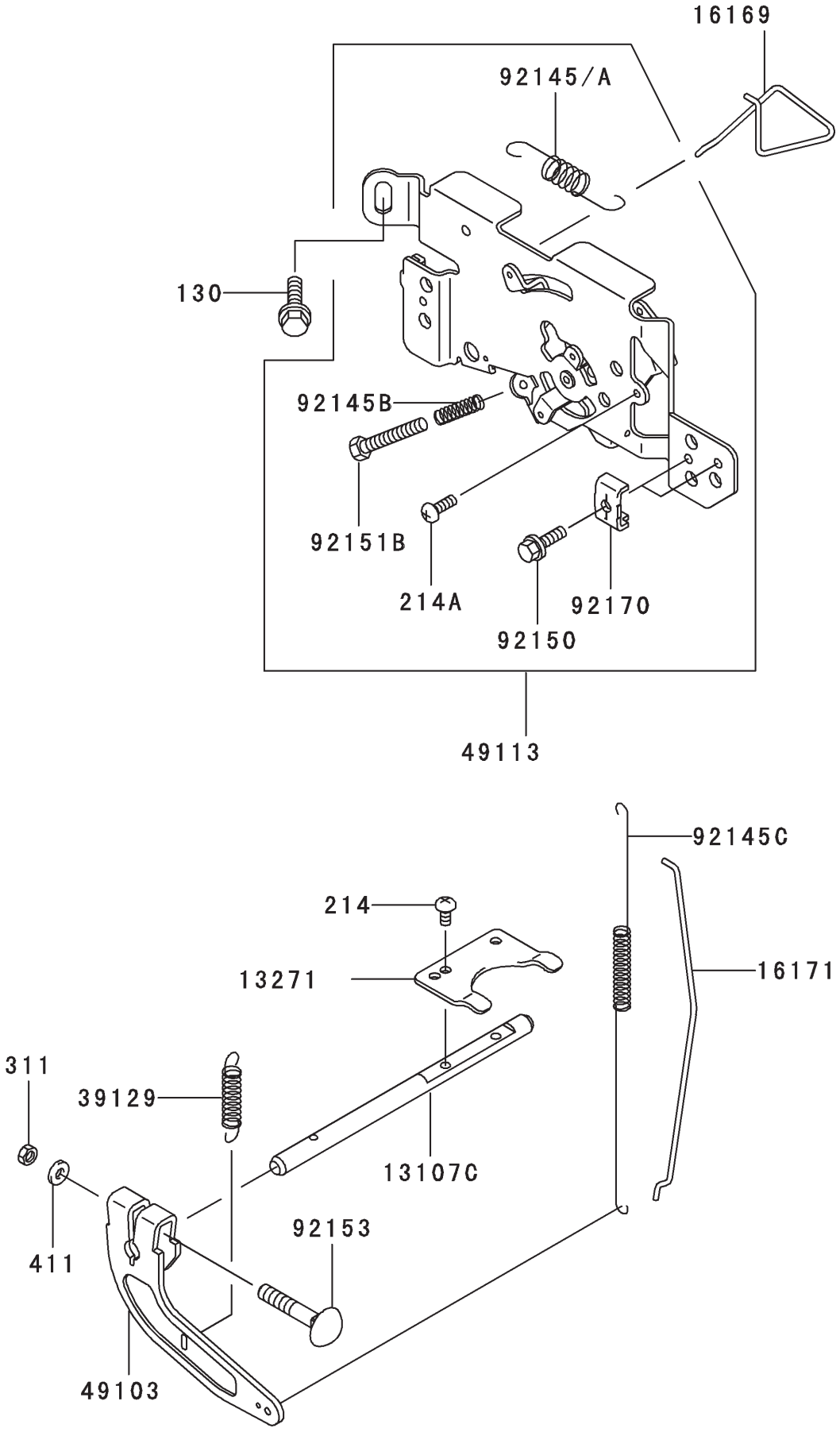

Control Equipment Assembly Kawasaki FH601V–DS06

Ref. No.	Part No.	Qty.	Description
13107	13107–7013	1	Shaft
13270	13271–7018	1	Plate
16169	16169–7006	1	Link–Choke
16171	16171–7004	1	Link
39129	39129–7004	1	Spring–Governor
49103	49103–7004	1	Arm–Governor
49113	49113–7017	1	Panel–Comp–Control
92145	92145–7005	1	Spring
92145B	92145–7005	1	Spring
92145C	92145–7009	1	Spring
92150	92150–2182	2	Bolt, 5x18
92151B	92151–7014	1	Bolt, 5x30
92153	92151–7005	1	Bolt, 6x35
92170	92170–7001	2	Clamp
130	130B0612	2	Bolt–Flanged
214	214B0408	2	Screw–Pan
214A	214B0412	1	Screw–Pan
311	311B0600	1	Nut–Hex
411	411B0600	1	Washer–Plain

Ref. No.	Part No.	Qty.	Description

Carburetor Assembly Kawasaki FH601V–DS06

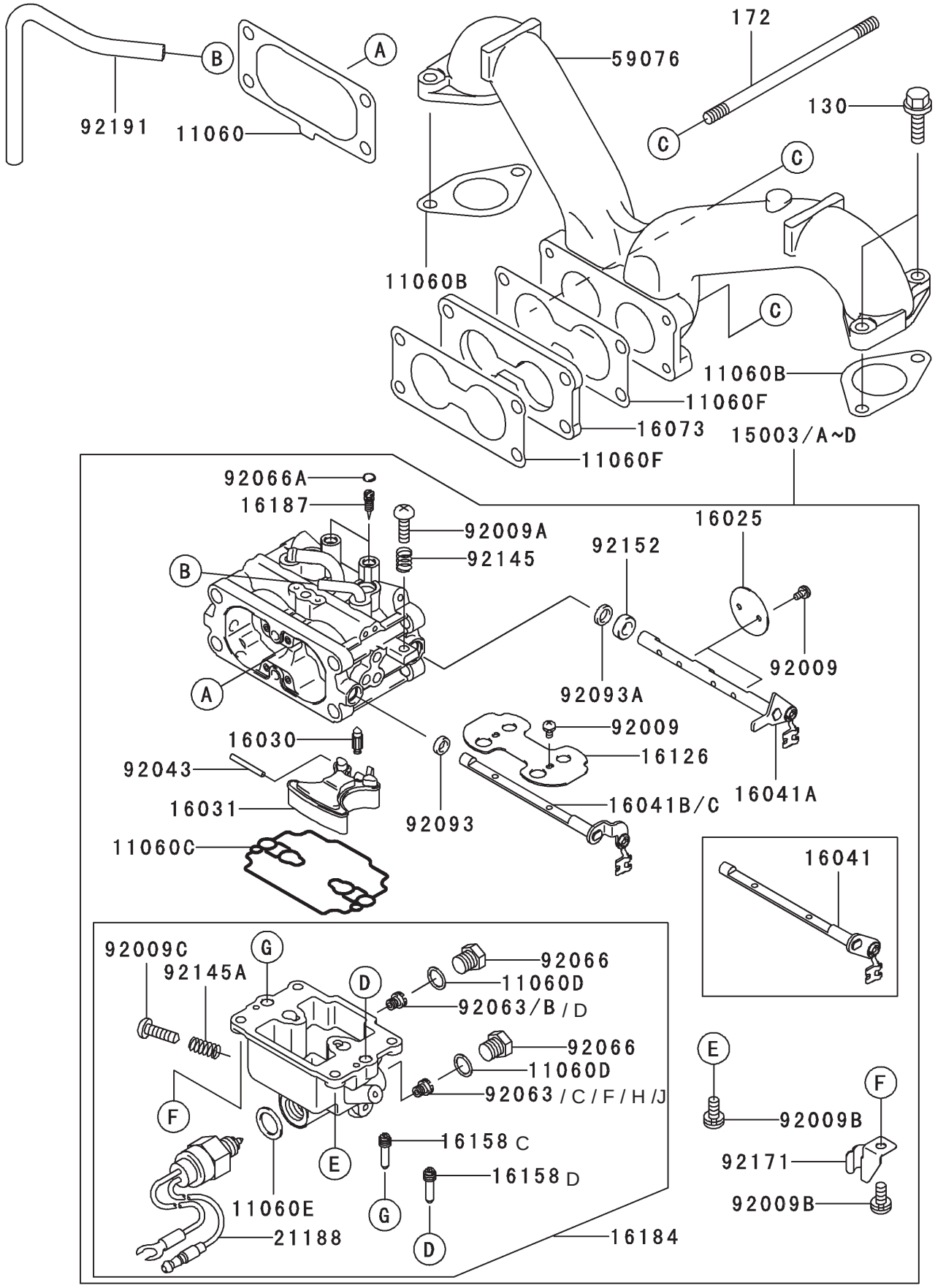

Carburetor Assembly Kawasaki FH601V–DS06

Ref. No.	Part No.	Qty.	Description
11060	11060–7009	1	Gasket, Air Filter
11060F	11060–7024	2	Gasket, Carburetor
11060B	11060–7011	2	Gasket–Manifold
11060C	11060–7018	1	Gasket, Float Chamber
11060D	11060–7019	2	Gasket, Main Plug
11060E	11060–7020	1	Gasket, Solenoid
15003	15003–7046	1	Carburetor–Assy
16025	16025–7001	2	Valve–Throttle
16030	16030–7002	1	Valve–Float
16031	16031–7001	1	Float
16041	16041–7007	1	Shaft–Carburetor, Choke
16041A	16041–7002	1	Shaft–Carburetor Throttle
16073	16073–7005	1	Insulator
16126	16126–7004	1	Valve, Choke
16158C	16158–7006	2	Jet–Slow
16158D	16158–7007	2	Jet–Slow
16184	16184–7006	1	Chamber–Assy–Float
16187	16187–7002	2	Needle–Jet
21188	21188–7001	1	Solenoid
59076	59076–7002	1	Manifold–Intake
92009	92009–7003	6	Screw
92009A	92009–7004	1	Screw
92009B	92009–7005	4	Screw
92009C	92009–7006	1	Screw, Drain
92043	92043–7004	1	Pin–Float
92063B	92063–7010	1	Jet–Main
92063C	92063–7011	1	Jet–Main
92063D	92063–7017	A/R	Jet–Main
92063F	92063–7018	A/R	Jet–Main
92063H	92063–7019	A/R	Jet–Main
92063J	92063–7020	A/R	Jet–Main
92066	92066–7008	2	Plug, Main Jet
92066A	92066–7009	2	Plug, Expansion
92093	92093–7001	1	Seal
92093A	92093–7002	2	Seal
92145	92145–7010	1	Spring
92145A	92145–7011	1	Spring
92152	92152–7001	1	Collar
92171	92171–7001	1	Clamp
92191	92191–7010	1	Tube
130	130B0620	4	Bolt–Flanged
172	172G06105	2	Bolt–Stud

Ref. No.	Part No.	Qty.	Description

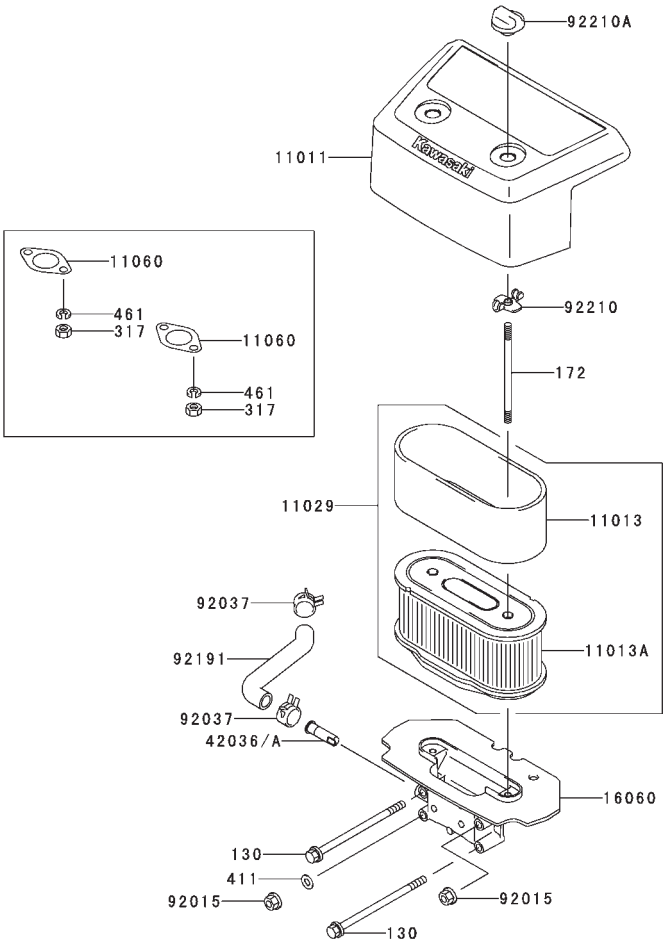

Air–Filter Assembly Kawasaki FH601V–DS06

Ref. No.	Part No.	Qty.	Description
11011	11011–7003	1	Case–Air Filter
11013	11013–7009	1	Element–Air Filter
11013A	11013–7010	1	Element–Air Filter
11029	11029–7002	1	Element–Assy–Air Filter
11060	11060–7016	2	Gasket, Muffler
16060	16060–7001	1	Pipe–Intake
42036	42036–7002	1	Sleeve
92015	92015–1193	2	Nut
92037	92037–2079	2	Clamp
92191	92191–7006	1	Tube
92210	92210–7004	2	Nut
92210A	92210–7008	2	Nut
130	130B06105	2	Bolt–Flanged
172	172G0690	2	Bolt–Stud
317	317R0800	4	Nut–Hex–Small
411	411B0600	1	Washer–Plain
461	461F0800	4	Washer–Spring

Ref. No.	Part No.	Qty.	Description

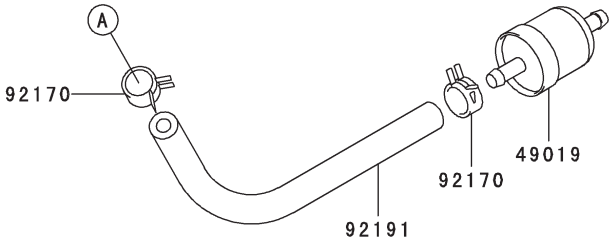

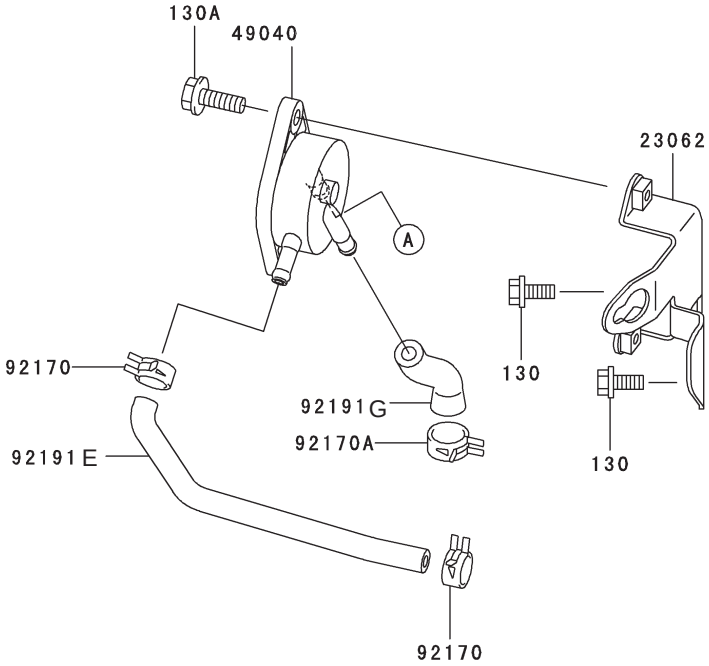

Fuel Tank/Fuel Valve Assembly Kawasaki FH601V–DS06

Ref. No.	Part No.	Qty.	Description
23062	23062–7004–9H	1	Bracket–Comp
49019	49019–7001	1	Filter–Fuel
49040	49040–2075	1	Pump–Fuel
92170	92170–2088	4	Clamp
92170A	92170–7003	1	Clamp
92191	92191–7003	1	Tube,6.35x12.7x160
92191E	92191–7017	1	Tube
92191G	92191–7019	1	Tube
130	130B0616	2	Bolt–Flanged
130A	130B0620	2	Bolt–Flanged

Ref. No.	Part No.	Qty.	Description

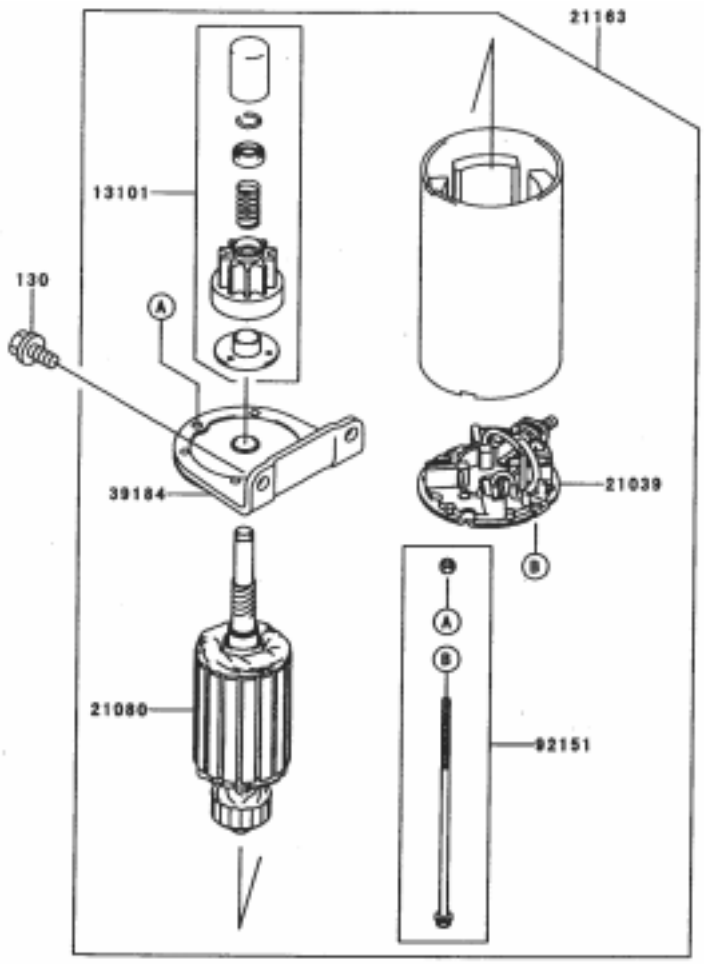

Starter/Decal – Kawasaki FH601V–DS06

Ref. No.	Part No.	Qty.	Description
13101	13101–7001	1	Gear–Assy
21039	21039–7001	1	Brush
21080	21080–7001	1	Armature
21163	21163–7001	1	Starter–Electric
39184	39184–7001	1	Bracket–Assy
92151	92151–7013	1	Bolt
130	130B0816	1	Bolt–Flanged
56033	56033–7001	1	Decal–Manual
56080	56080–7006	1	Decal–Brand

Ref. No.	Part No.	Qty.	Description

Maintenance Record

Date								

TORO®