Form No. 3383-613 Rev F

TORO®

Count on it.

Parts Catalog

Greensmaster® 3250-D 2-Wheel Drive Traction Unit

Model No. 04384—Serial No. 314003001 and Up

Register at www.Toro.com.
Original Instructions (EN)

CE

3383-613 F

Ordering Replacement Parts

To order replacement parts, please supply the part number, the quantity, and the description of each part desired.

Understanding Reference Numbers

Each identified part in an illustration has a reference number. The reference number for a part also appears in the parts list, along with other information about the part.

This catalog uses two special reference number formats, one to indicate parts in a service assembly and another to indicate the quantity of a given part in an illustration.

Service Assembly Reference Numbers

Parts in service assemblies have reference numbers in the form a:b. The a represents the reference number of the entire service assembly and the b represents a sequential number unique to each part within the service assembly.

For example, a wheel assembly might be identified by reference number 6, the tire by 6:1, the valve by 6:2, and the wheel by 6:3. When you order the assembly identified by reference number 6, you receive all parts identified by reference numbers 6:1,6:2, and 6:3. However, you may also order any part individually. Reference numbers of this type appear in illustration and in parts lists.

Reference Numbers Indicating Quantity

In an illustration, if a reference number indicates more than one part, the reference number has the form nX y. The n represents the quantity of the part, the X is the multiplication symbol, and the y represents the reference number.

For example, in an illustration, the reference number 2X 37 means that two of the parts identified by reference number 37 are indicated.

Contents

Traction Control Assembly . . . 5
Brake Pedal Assembly . . . 6
Front Wheel and Brake Assembly . . . 7
Brake Assembly No. 104-7705 . . . 8
Hydraulic Motor Assembly (CCW) No. 110-4015 . . . 9
Hydraulic Motor Assembly (CW) No. 110-4016 . . . 10
Steering Arm Assembly . . . 11
Steering Valve Assembly No. 114-4672 . . . 12
Rear Wheel Assembly . . . 13
Hydraulic Cylinder Assembly No. 112-0298 . . . 14
Console Assembly . . . 15
Functional Control Lever Assembly . . . 16
Seat Assembly . . . 17
Battery and Electrical Component Assembly . . . 19
Hydrostat and Gear Pump Drive Assembly . . . 20
Hydraulic Pump Assembly No. 121-9557 . . . 21
Hydraulic Gear Pump Assembly No. 114-9956 . . . 23
Neutral System Assembly . . . 24
Engine Installation Assembly . . . 25
Air Cleaner, Fuel Filter and Exhaust Assembly . . . 26
Air Cleaner Assembly No. 95-5805 . . . 27
Radiator Assembly . . . 28
Manifold Block Installation Assembly . . . 29
Hydraulic Manifold Assembly No. 112-9197 . . . 30
Front Bulkhead and Reel Motor Assembly . . . 32
Hydraulic Reel Motor Assembly No. 120-2072 . . . 33
Rear Bulkhead and Reel Motor Assembly . . . 34
Left Hand and Right Hand Lift Arm Assembly . . . 35
Hydraulic Cylinder Assembly No. 105-3821 . . . 37
Center Lift Arm Assembly . . . 38
Hydraulic Cylinder Assembly No. 105-3820 . . . 39
Fuel System Assembly . . . 40
Hydraulic Tank and Filter Assembly . . . 41
Miscellaneous Part Assembly . . . 42
Pull Frame Assembly . . . 43
Roll-Over Protection System Assembly . . . 44
Crankcase Assembly . . . 45
Oil Pan, Oil Pump and Dipstick Assembly . . . 46
Cylinder Head Assembly . . . 47
Gear Case and Oil Filter Cartridge Assembly . . . 48
Cylinder Head Cover Assembly . . . 49
Main Bearing Case Assembly . . . 50
Camshaft and Idle Gear Shaft Assembly . . . 51
Piston and Crankshaft Assembly . . . 52
Fuel Camshaft Assembly . . . 53
Idle Apparatus and Fuel Pump Cover Assembly . . . 54
Stop Solenoid and Speed Control Plate Assembly . . . 55
Injection Pump Assembly . . . 56
Governor Assembly . . . 57
Nozzle Holder and Glow Plug Assembly . . . 58
Nozzle Holder Assembly . . . 60
Alternator and Pulley Assembly . . . 62
Alternator Components Assembly . . . 63
Starter and Flywheel Assembly . . . 64

© 2023—The Toro® Company

8111 Lyndale Avenue South
Bloomington, MN 55420

Contact us at www.Toro.com.
Printed in the USA.

All Rights Reserved

Contents (continued)

Starter Component Assembly 65
Water Flange and Thermostat Assembly 66
Water Pump and Water Pipe Assembly 67
Valve and Rocker Arm Assembly 68
Inlet and Exhaust Manifold Assembly 69
Miscellaneous Engine Parts 70
Attachments and Accessories 71

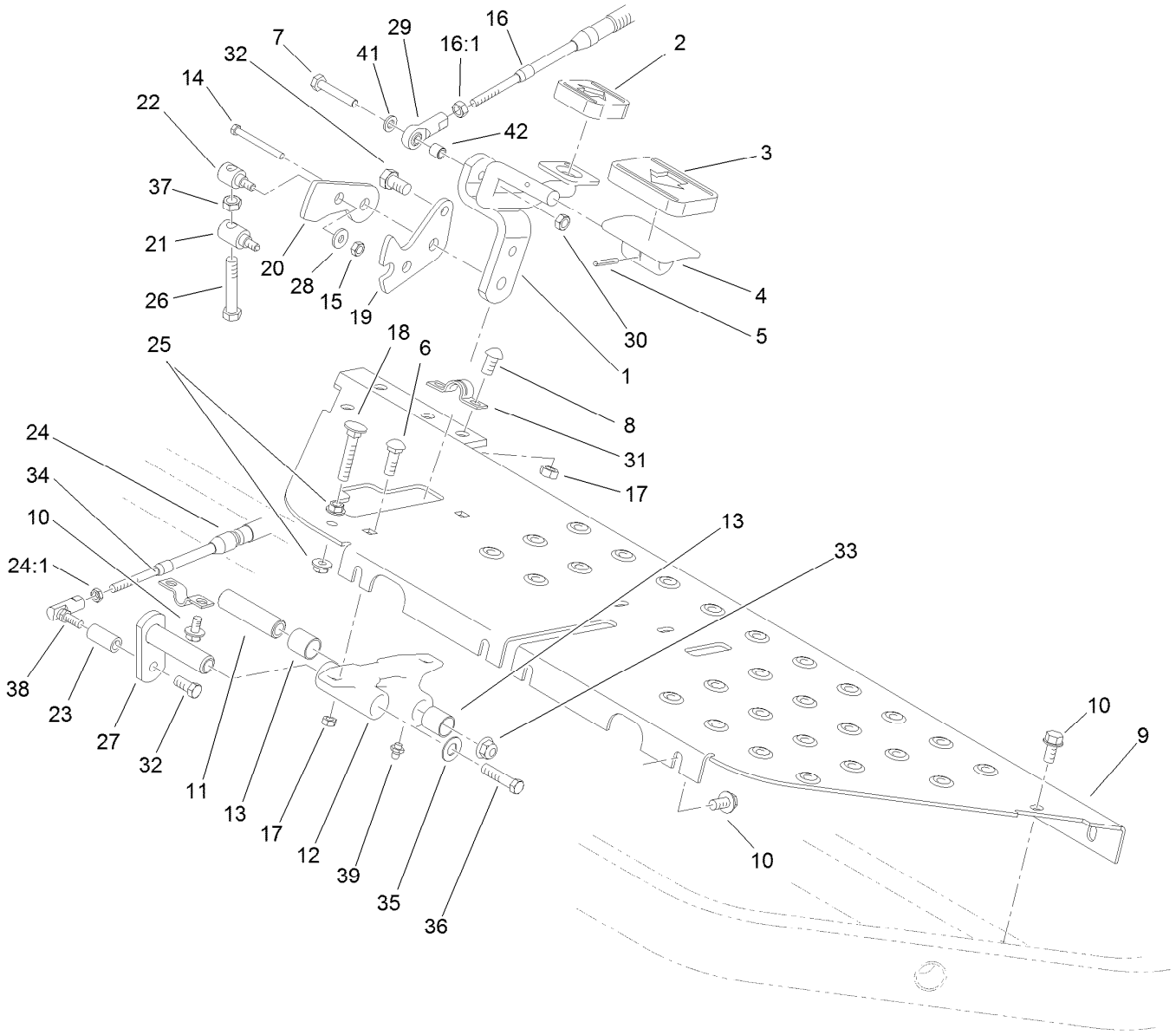

Traction Control Assembly

Ref.	Part Number	Qty.	Description
1	93-2085-01	1	Rod ASM
2	74-9110	1	Pad-Pedal, Reverse
3	74-9100	1	Pad-Pedal, Forward
4	117-9507	1	Pedal-Accelerator
5	32121-45	1	Pin-Spring
6	3230-16	2	Screw-CARR
7	94-5781	1	Screw-HHF
8	3274-55	2	Screw-HSBH
9	105-9750-01	1	Plate-Floor
10	32104-32	8	Screw-HWH
11	94-1371	1	Spacer
12	115-6695	1	Pedal-Pivot
13	256-311	4	Bushing-Split
14	323-42	1	Screw-HH
15	33023-00	2	Nut-Lock
16	107-2550	1	Cable-Control, Traction
16:1	3220-1	2	Nut-Jam
17	104-8300	4	Nut-HF, NI
18	17-9420	1	Screw-Handle
19	94-1373	1	Bracket-Lock
20	94-1372	1	Bracket-Mow
21	94-1375	1	Trunnion-Bracket, Lock
22	94-1374	1	Trunnion-Bracket, Mow
23	94-1386	1	Shaft-Pedal
24	94-1304	1	Cable-Lock, Neutral
24:1	3219-14	2	Nut-Hex
25	32128-20	2	Nut-HF
26	94-3489	1	Screw-HH
27	94-1300	1	Lock-Neutral
28	3256-1	2	Washer-Flat
29	2411-41	1	Rod End-Ball Joint
30	104-7201	1	Nut-HF, NI
31	93-2092	1	Clamp-Cable
32	33114-016	2	Screw-HH
33	104-8301	1	Nut-HF, NI
34	93-2279	1	Clamp-Cable
35	3256-24	1	Washer-Flat
36	33115-016	1	Screw-HH
37	33014-00	1	Nut-Hex
38	2411-38	1	Joint-Ball
39	302-5	1	Fitting-Grease
41	33093-00	1	Washer-Flat
42	99-3545	1	Spacer

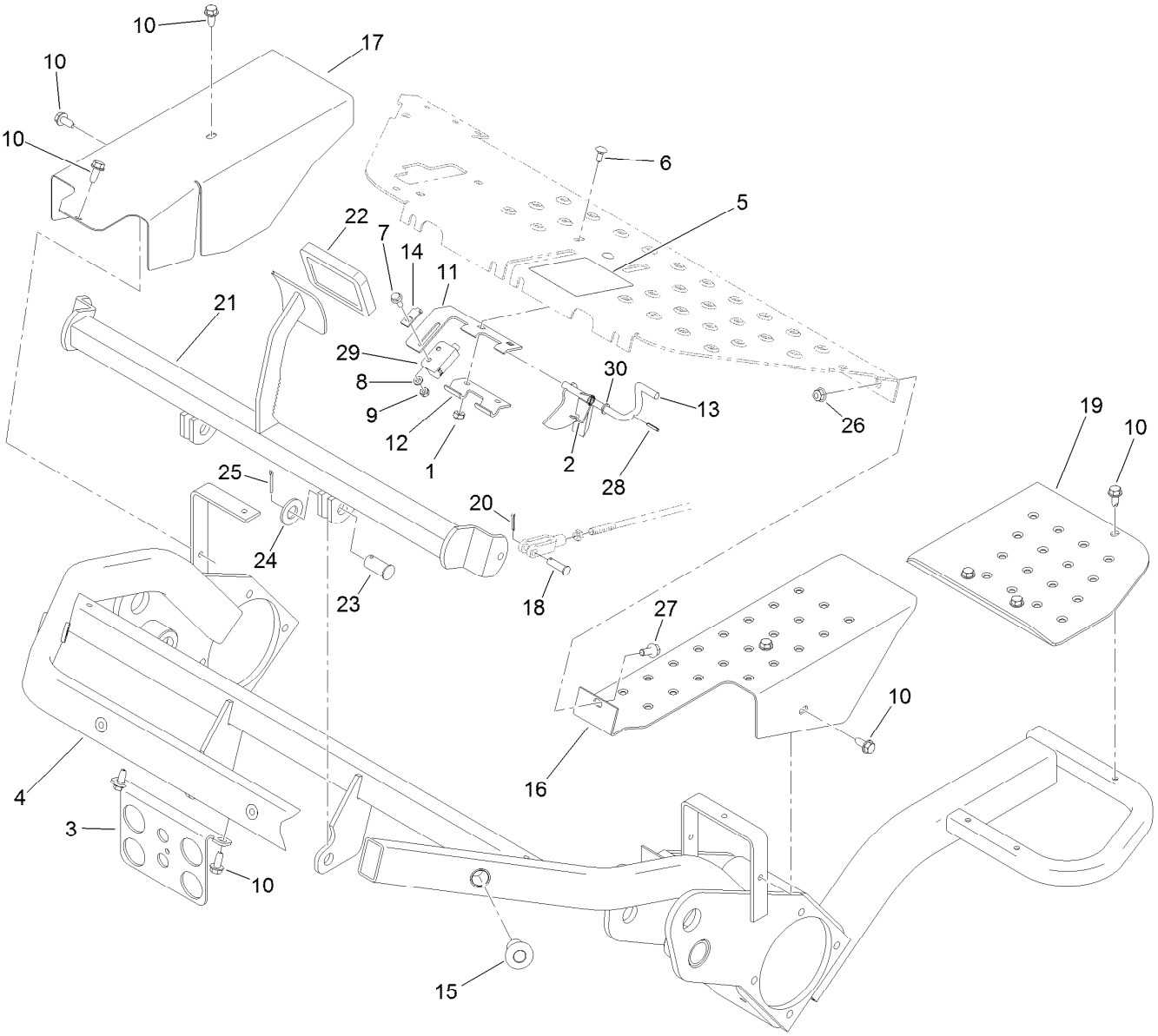

Brake Pedal Assembly

Ref.	Part Number	Qty.	Description
1	3296-16	2	Nut-Lock, NI
2	104-7704	1	Spring-Latch, Brake
3	121-2636-01	1	Bracket-Bulkhead
4	127-6145-01	1	Frame
5	93-8062	1	Decal-Brake, Parking
6	3229-11	2	Screw-CARR
7	114-8414	1	Screw-HHF
8	33093-00	1	Washer-Flat
9	33023-00	1	Nut-Lock
10	32104-32	10	Screw-HWH
11	104-2096	1	Bracket-Switch
12	104-7703	1	Hinge-Lower
13	104-2094	1	Brake-Latch
14	104-7702	1	Plate-Switch
15	83-1700	3	Bushing-Flange

Ref.	Part Number	Qty.	Description
16	93-2073-01	1	Shield-Wheel, LH
17	93-2072-01	1	Shield-Wheel, RH
18	283-61	2	Pin-Yoke
19	130-0104-01	1	Step
20	3272-6	2	Pin-Cotter
21	93-2075-01	1	Brake Pedal ASM
22	93-7629	1	Pad-Foot, Brake
23	283-87	2	Pin-Clevis
24	3256-27	2	Washer-Flat
25	3272-11	2	Pin-Cotter
26	104-8300	1	Nut-HF, NI
27	3234-47	1	Screw-HHF
28	32121-50	1	Pin-Spring
29	104-2057	1	Sensor
30	75-5470	1	Spacer-Bearing

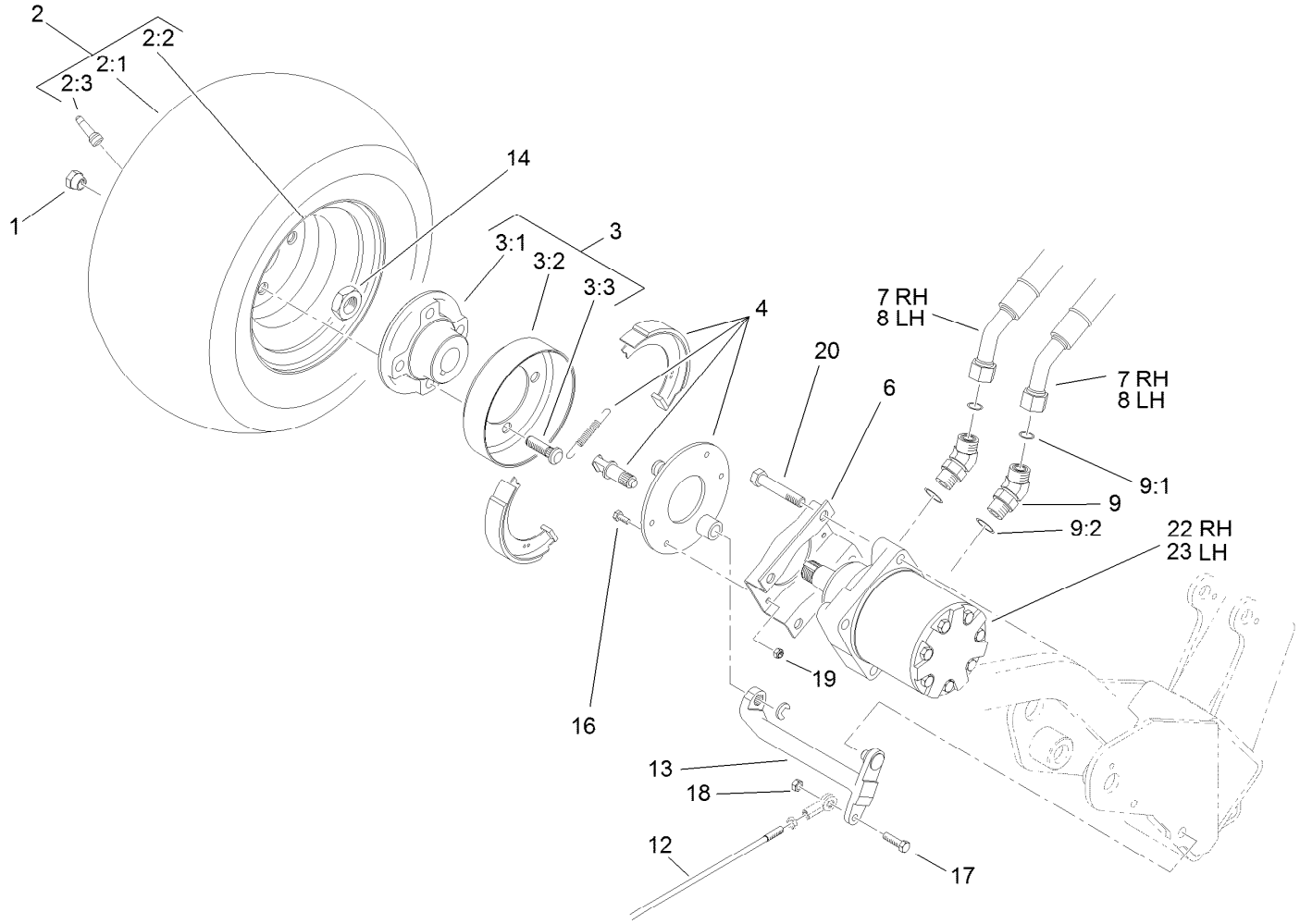

Front Wheel and Brake Assembly

Ref.	Part Number	Qty.	Description
1	242-50	8	Nut-Lug
2	114-4665	2	Tire ASM
2:1	70-8500	1	Tire-Smooth, 4-Ply
2:2	114-4643	1	Wheel
2:3	232-27	1	Stem-Valve
3	120-5330	2	Brake Drum ASM
3:1	108-2103-03	1	Hub-Wheel
3:2	10-6850	1	Drum-Brake
3:3	117-3749	4	Stud-Drive
4	104-7705	2	Brake ASM
6	84-2000-03	2	Bracket-Brake
7	94-5357	2	Hose ASM
8	94-5358	2	Hose ASM

Ref.	Part Number	Qty.	Description
9	340-14	4	Fitting-HYD, 45 DEG
9:1	237-65	1	O-Ring
9:2	237-80	1	O-Ring
12	115-6675	2	Brake Rod ASM
13	93-2096	2	Lever-Brake
14	26-3790	2	Nut-Lock
16	321-5	8	Screw-HH
17	3234-36	2	Screw-HHF
18	104-8300	2	Nut-HF, NI
19	3296-42	8	Nut-Lock, NI
20	33116-060	8	Screw-HH
22	110-4015	1	HYD Motor ASM (CCW)
23	110-4016	1	HYD Motor ASM (CW)

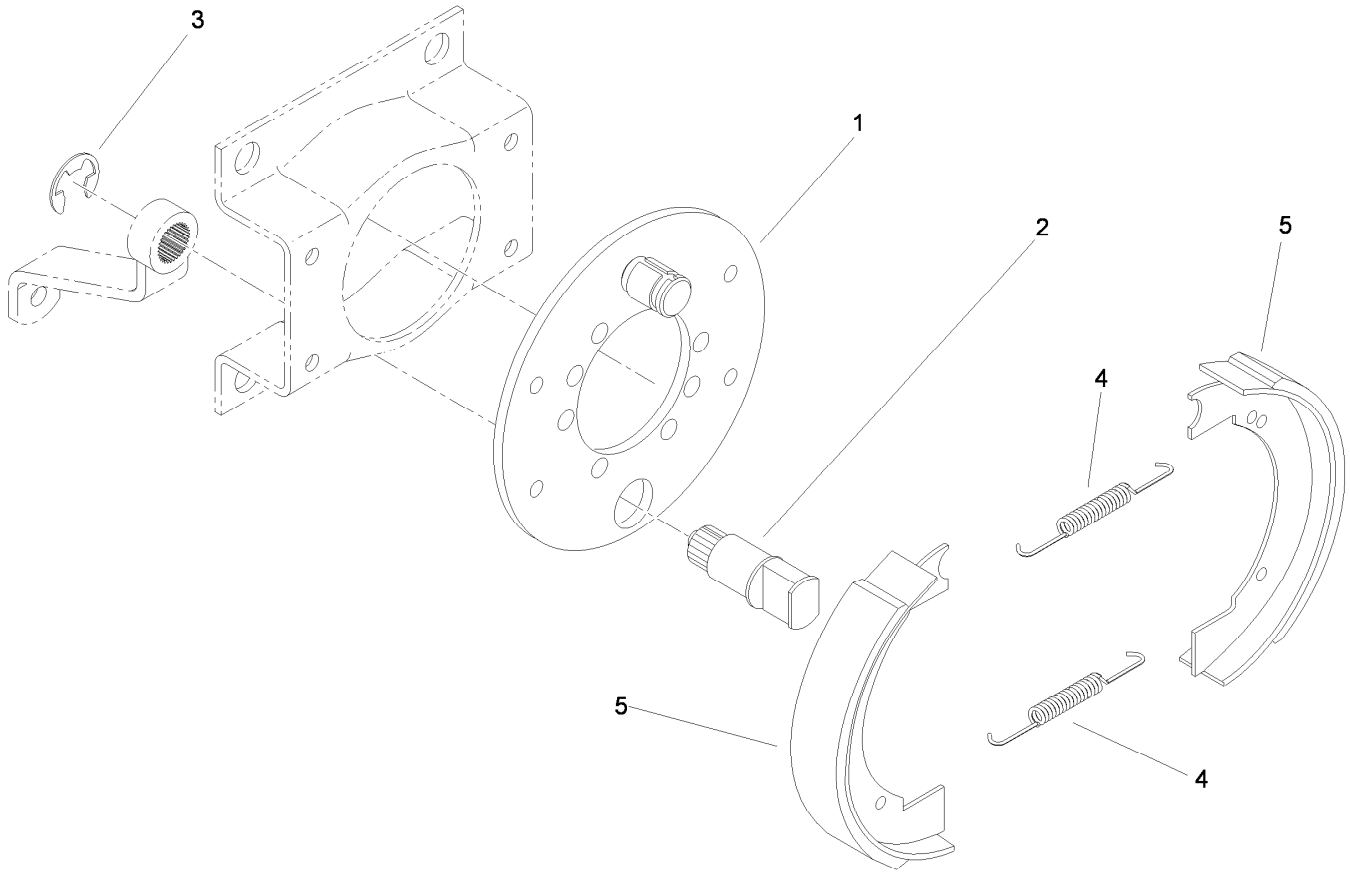

Brake Assembly No. 104-7705

Ref.	*Part Number*	*Qty.*	*Description*
1	70-9870	1	Plate-Backing
2	104-7707	1	Shaft-Cam, Brake
3	104-7706	1	E-Ring, Bowed
4	70-9880	2	Spring-Return
5	70-9840	2	Shoe-Brake

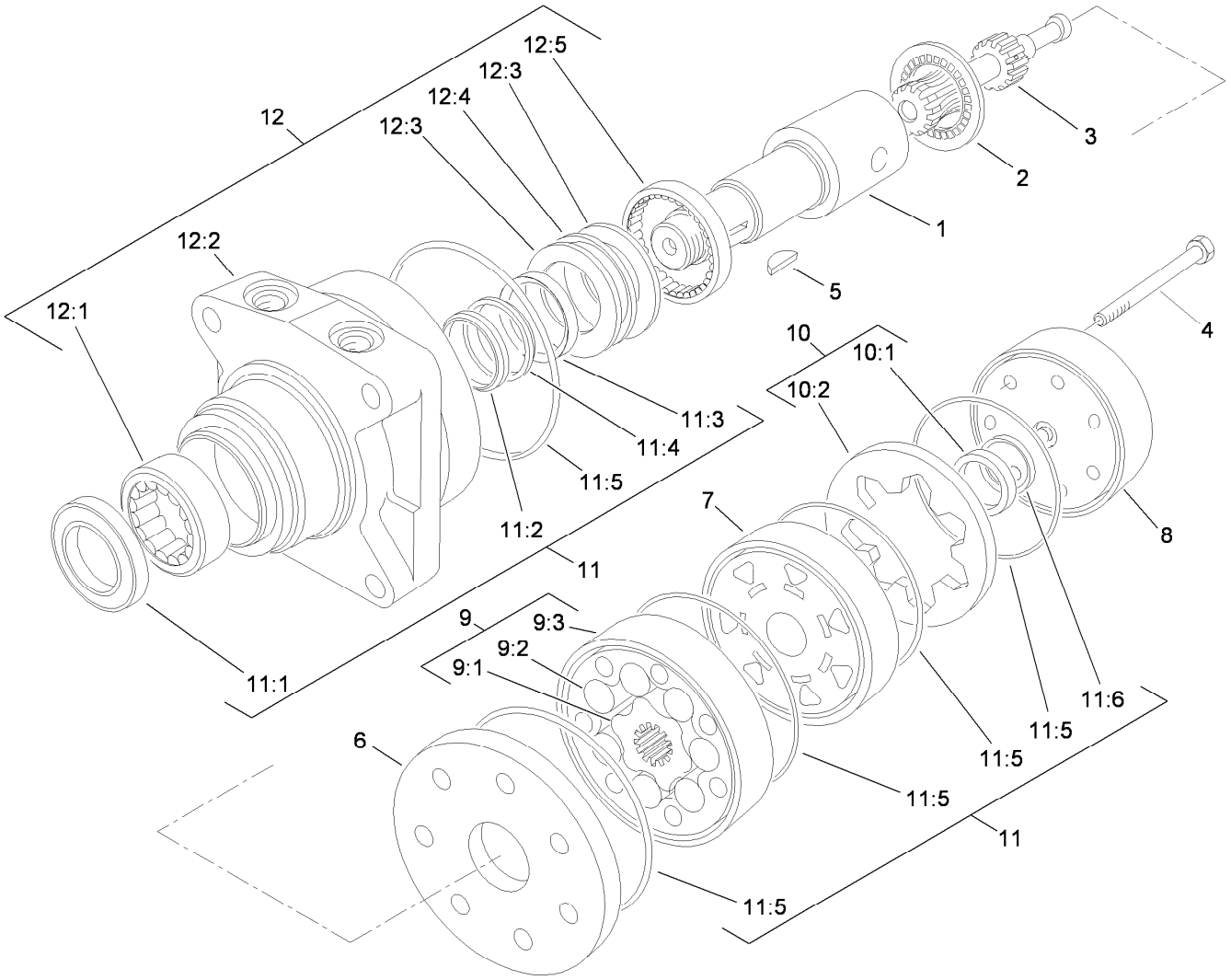

Hydraulic Motor Assembly (CCW) No. 110-4015

Ref.	Part Number	Qty.	Description
1	76-0860	1	Shaft-Coupling
2	76-0850	1	Bearing-Thrust
3	92-9761	1	Link-Drive
4	92-9762	7	Screw-HH
5	3257-42	1	Key-Woodruff
6	92-9754	1	Plate-Wear
7	76-0840	1	Manifold
8	76-0940	1	End Cover ASM
9	92-9763	1	Rotor Set
9:1		1	Rotor ●
9:2		1	Vane ●
9:3		1	Stator ●
10	76-0880	1	Commutator ASM
10:1		1	Commutator ●

Ref.	Part Number	Qty.	Description
10:2		1	Ring-Commutator ●
11	94-8178	1	Seal Kit
11:1		1	Seal-Dirt And Water ●
11:2		1	Backup-Ring ●
11:3		1	Seal-Shaft ●
11:4		1	Washer-Backup ●
11:5		5	Seal-Square, Ring (Inner) ●
11:6		1	Seal-Commutator ●
12	76-0810	1	Housing ASM
12:1		1	Bearing ●
12:2		1	Housing ●
12:3		2	Washer-Thrust ●
12:4		1	Bearing-Thrust ●
12:5		1	Bearing ●

● Not serviced separately

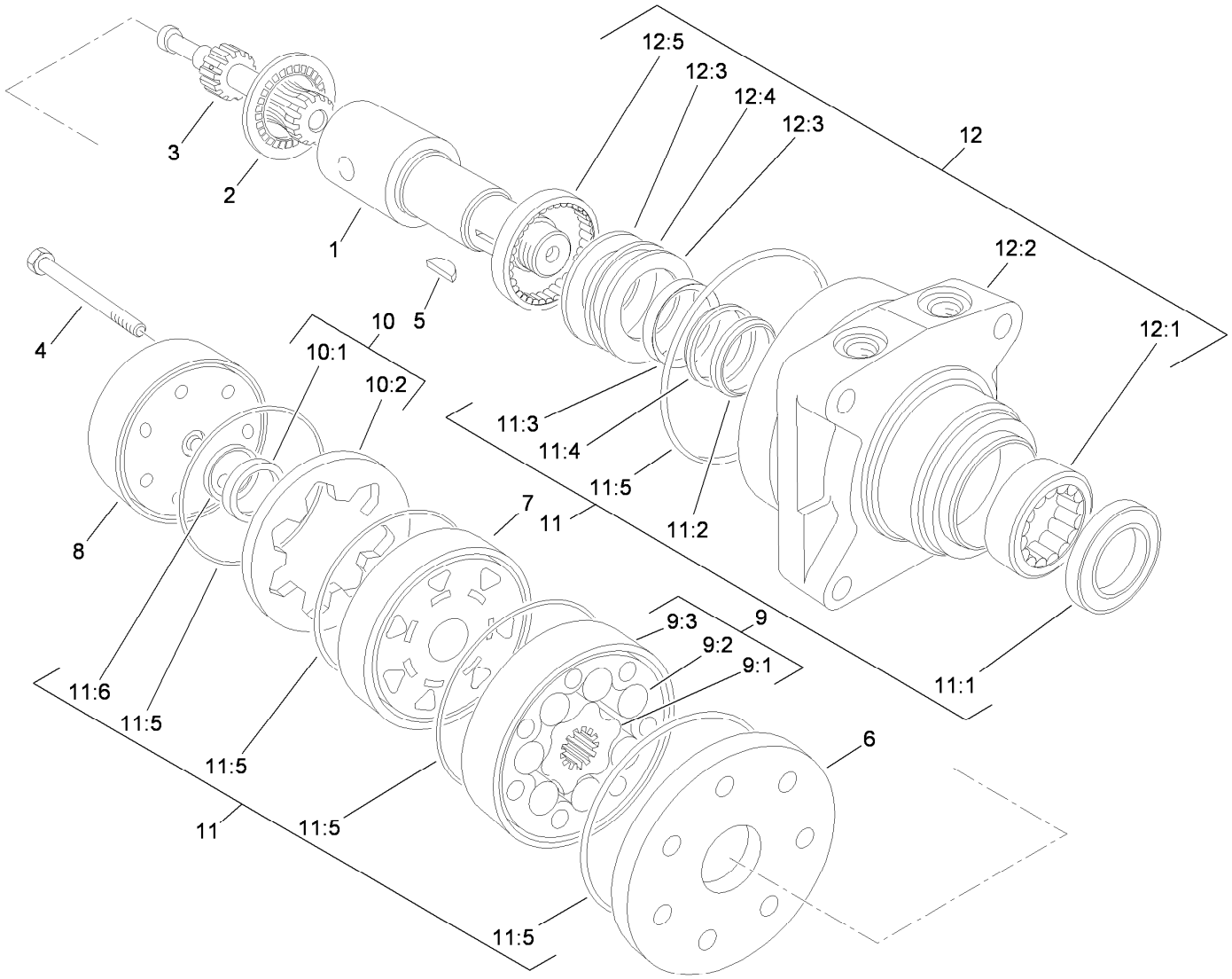

Hydraulic Motor Assembly (CW) No. 110-4016

Ref.	Part Number	Qty.	Description
1	76-0860	1	Shaft-Coupling
2	76-0850	1	Bearing-Thrust
3	92-9761	1	Link-Drive
4	92-9762	7	Screw-HH
5	3257-42	1	Key-Woodruff
6	92-9754	1	Plate-Wear
7	76-0840	1	Manifold
8	76-0940	1	End Cover ASM
9	92-9763	1	Rotor Set
9:1		1	Rotor ●
9:2		1	Vane ●
9:3		1	Stator ●
10	76-0880	1	Commutator ASM
10:1		1	Commutator ●

Ref.	Part Number	Qty.	Description
10:2		1	Ring-Commutator ●
11	94-8178	1	Seal Kit
11:1		1	Seal-Dirt And Water ●
11:2		1	Backup-Ring ●
11:3		1	Seal-Shaft ●
11:4		1	Washer-Backup ●
11:5		5	Seal-Square, Ring (Inner) ●
11:6		1	Seal-Commutator ●
12	76-0810	1	Housing ASM
12:1		1	Bearing ●
12:2		1	Housing ●
12:3		2	Washer-Thrust ●
12:4		1	Bearing-Thrust ●
12:5		1	Bearing ●

● Not serviced separately

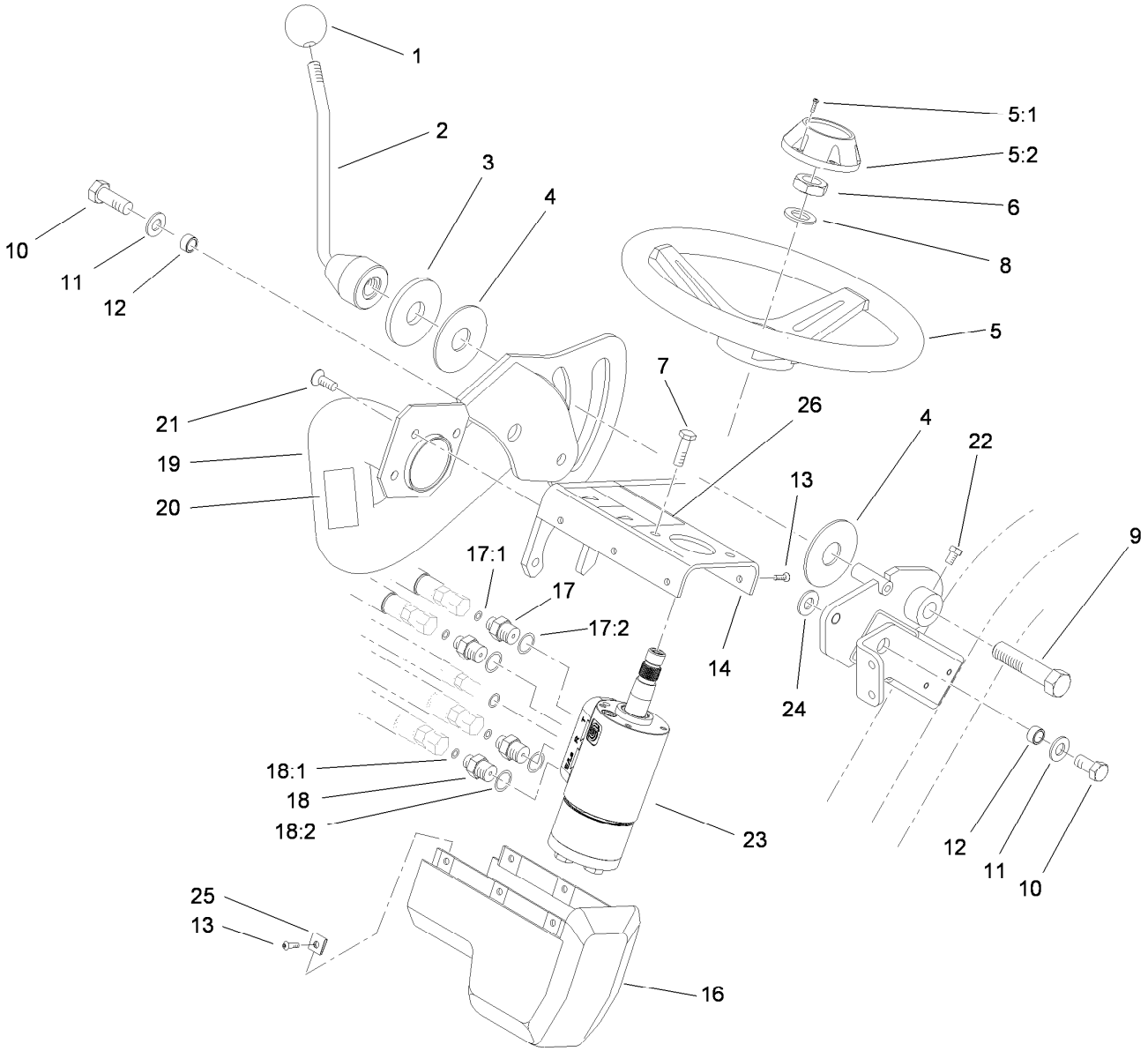

Steering Arm Assembly

Ref.	Part Number	Qty.	Description
1	233-48	1	Knob
2	93-2400-03	1	Lockup Handle ASM
3	83-0760	1	Spacer-Plate, Lockup
4	83-0740	2	Disc-Friction
5	75-0560	1	Steering Wheel ASM
5:1	32144-21	1	Screw
5:2	68-5140	1	Cap-Wheel, Steering
6	3296-33	1	Nut-Lock, NI
7	33103-016	4	Screw-HHF
8	3256-27	1	Washer-Flat
9	93-2199	1	Screw-HH, RH
10	325-4	2	Screw-HH
11	3256-26	2	Washer-Flat
12	47-2890	2	Bushing
13	3274-39	6	Screw-HSBH
14	114-4698-03	1	Steering Mount ASM
16	83-0810	1	Cover-Steering

Ref.	Part Number	Qty.	Description
17	340-1	2	Fitting-Straight
17:1	237-21	1	O-Ring
17:2	237-42	1	O-Ring
18	340-2	2	Fitting-Straight
18:1	237-22	1	O-Ring
18:2	237-42	1	O-Ring
19	93-2115-01	1	Steering Arm ASM
20	93-8068	1	Decal-Arm, Steering
21	3274-80	3	Screw-HH
22	3242-2	1	Screw-SQH
23	114-4672	1	Steering Valve ASM
24	65-6390	1	Washer-Thrust, Plain
25	3290-277	6	Nut-Speed
26	121-2640	1	Decal-Danger, CE
26	121-2641	1	Decal-Danger

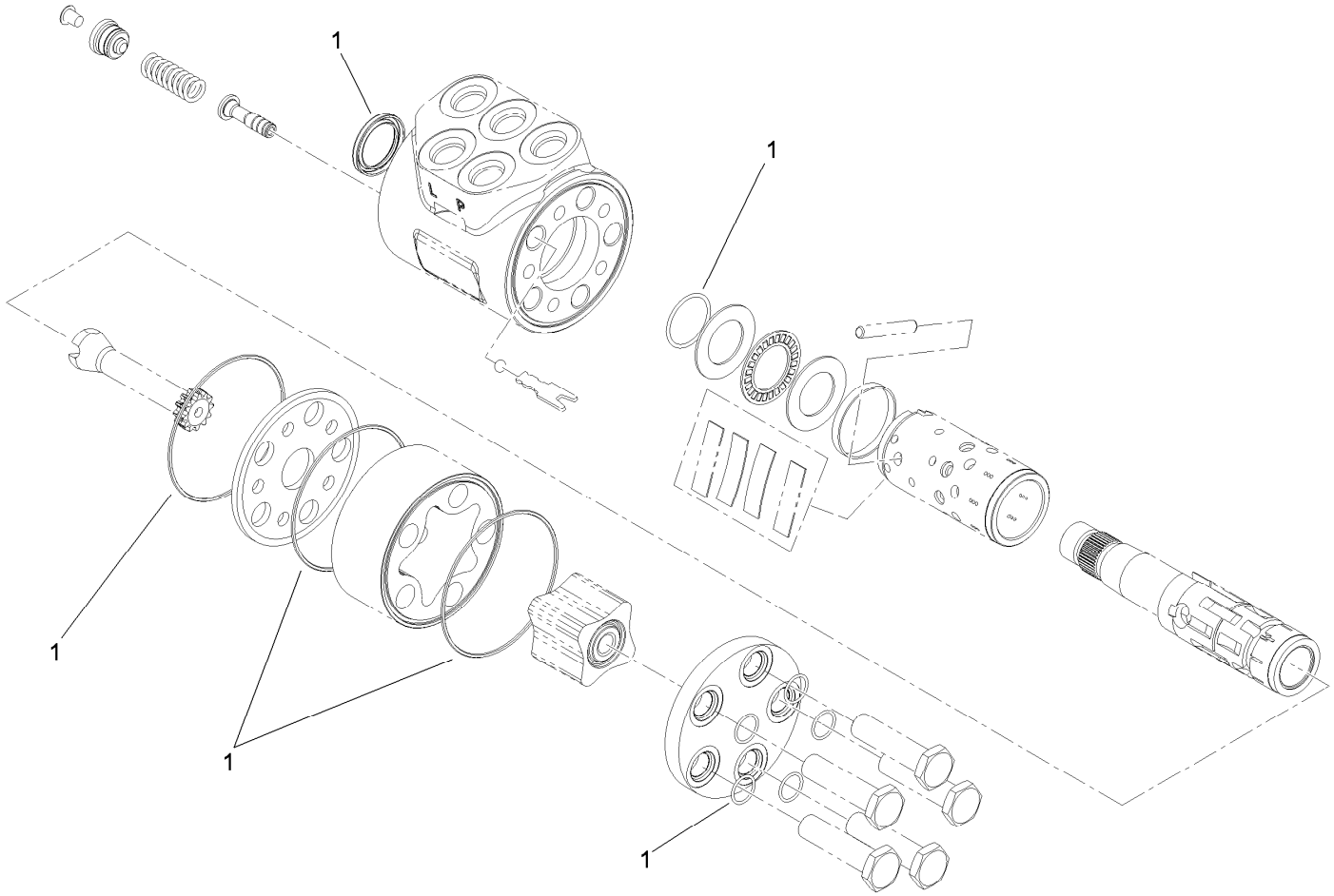

Steering Valve Assembly No. 114-4672

Ref.	*Part Number*	*Qty.*	*Description*
1	106-6716	1	Seal Kit

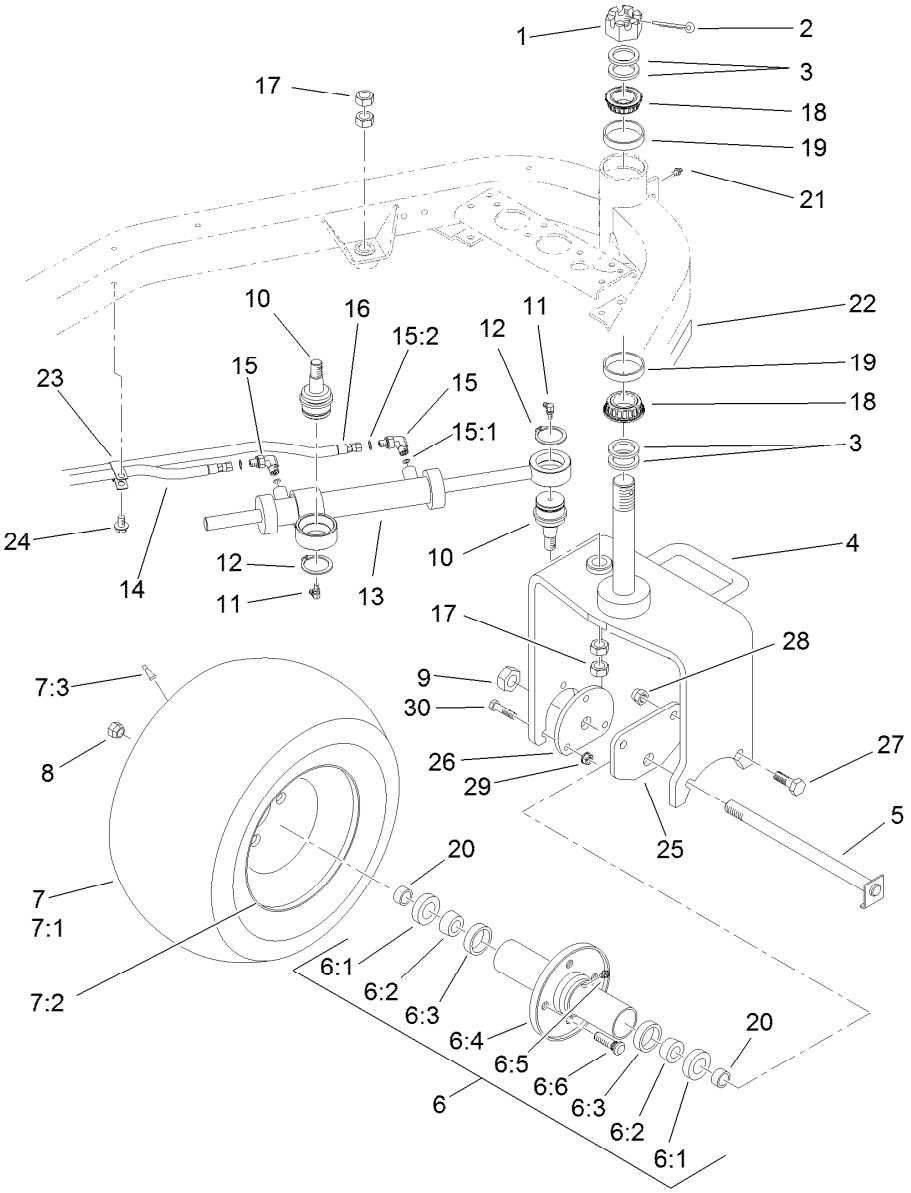

Rear Wheel Assembly

Ref.	Part Number	Qty.	Description
1	32136-9	1	Nut-Hex, Slotted
2	3272-37	1	Pin-Cotter
3	18-6320	4	Washer-Steering
4	112-9174-01	1	Fork-Caster
5	70-8370	1	Bolt
6	72-9710	1	Hub-Tire
6:1	253-111	2	Seal-Oil
6:2	254-78	2	Bearing-Cone
6:3	254-79	2	Bearing-Roller, Cup
6:4	75-9440	1	Hub ASM
6:5	302-11	1	Fitting-Lube, 45 DEG
6:6	10-6830	4	Stud-Type, Drive
7	114-4665	1	Tire ASM
7:1	70-8500	1	Tire-Smooth, 4-Ply
7:2	114-4643	1	Wheel
7:3	232-27	1	Stem-Valve
8	242-50	4	Nut-Lug
9	3296-67	1	Nut-Lock, NI
10	106-6774	2	Joint-Ball
11	302-60	2	Fitting-Grease
12	32151-104	2	Ring-Retaining, External

Ref.	Part Number	Qty.	Description
13	112-0298	1	HYD Steering Cylinder ASM
14	93-2270	1	HYD Hose ASM
15	340-132	2	Fitting-Elbow, 90 DEG
15:1	237-78	1	O-Ring
15:2	237-21	1	O-Ring
16	108-5675	1	Hydraulic Hose ASM
17	3220-6	4	Nut-Jam
18	115-9472	2	Bearing-Cone And Seal
19	115-9471	2	Bearing-Cup
20	70-8490	2	Spacer-Spindle, Rear
21	302-5	1	Fitting-Grease
22	99-1493	1	Decal
23	92-5753	1	Clamp-Hose
24	32104-32	1	Screw-HWH
25	99-1485-01	1	Plate-Adapter, Motor
26	99-1486-01	1	Plate-Adapter
27	325-6	2	Screw-HH
28	99-5107	2	Nut-Lock
29	104-8301	3	Nut-HF, NI
30	114-4681	3	Screw-HHF

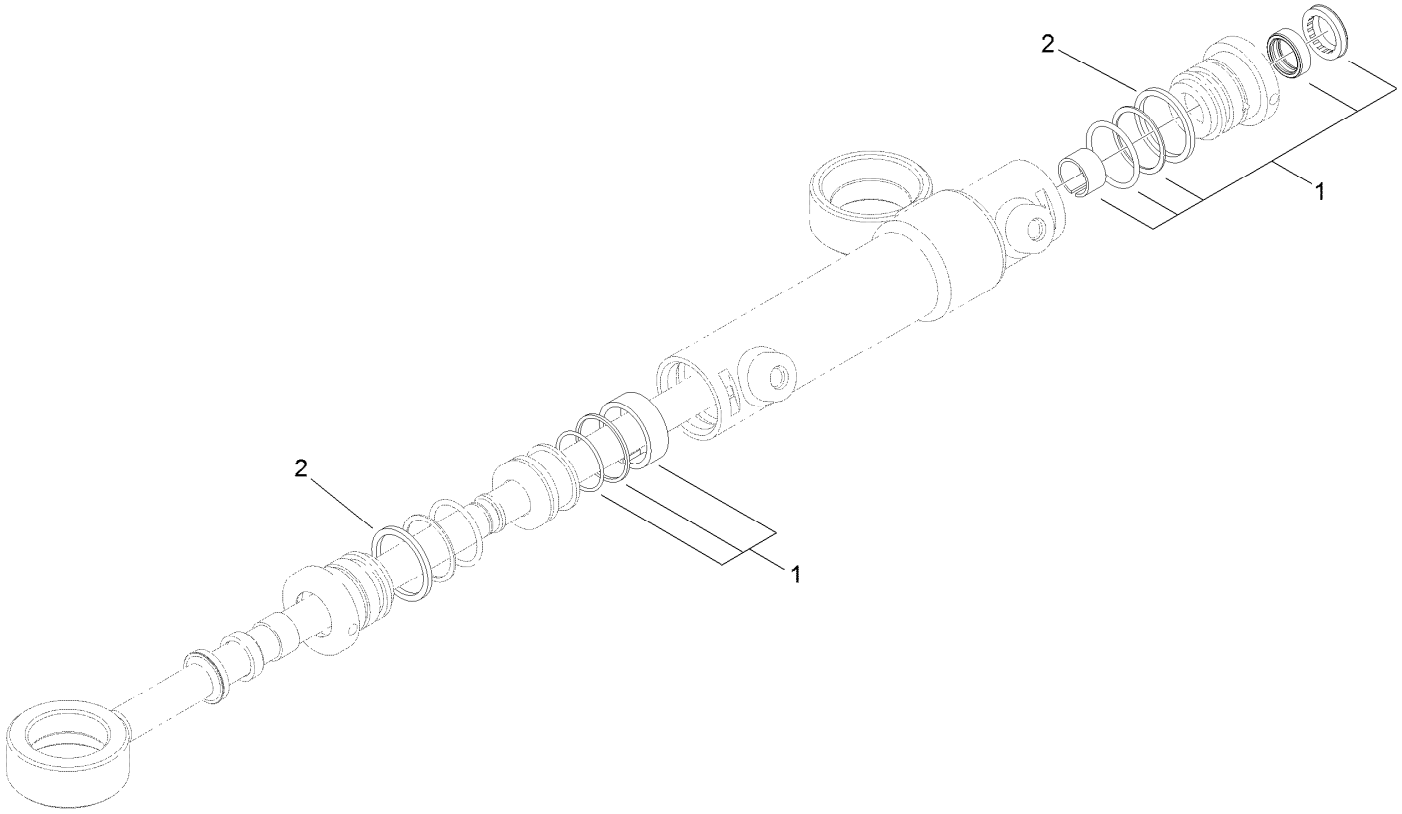

Hydraulic Cylinder Assembly No. 112-0298

Ref.	*Part Number*	*Qty.*	*Description*
1	112-9170	2	Seal Kit
2	117-9548	2	Ring-Retaining

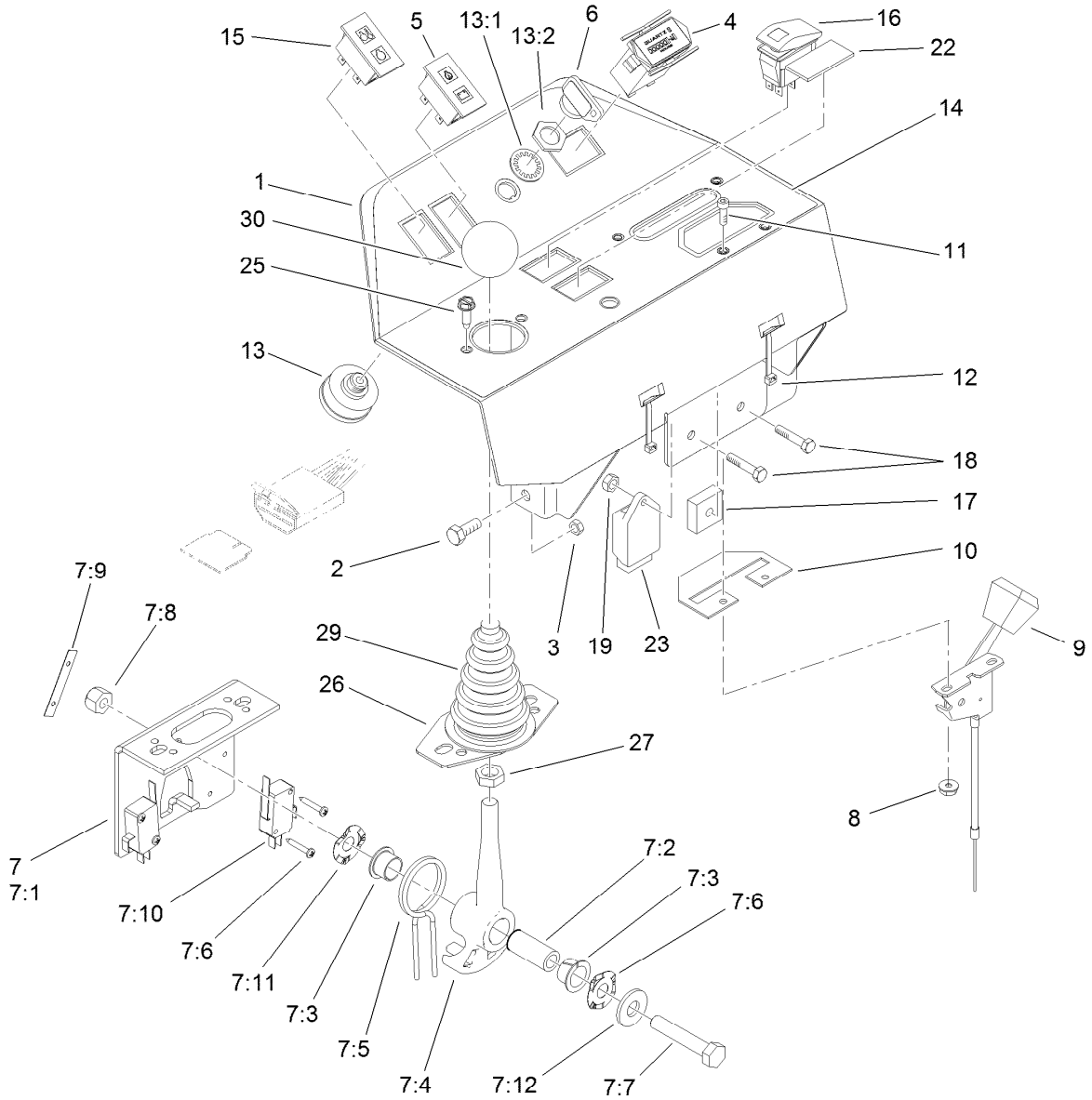

Console Assembly

Ref.	Part Number	Qty.	Description
1	108-6503-03	1	Console ASM
2	3234-47	4	Screw-HHF
3	104-8300	4	Nut-HF, NI
4	1-513374	1	Meter-Hour
5	100-8070	1	Lamp-Warning
6	63-8360	2	Key-Ignition
7	120-5280	1	Bracket-Joystick
7:1	115-5357-03	1	Bracket-Joystick
7:2	106-4192	1	Spacer
7:3	93-5547	2	Bushing-Nylon
7:4	119-3540	1	Hub-Pivot, Joystick
7:5	105-8289	1	Spring-Torsion
7:6	106-4193	2	Washer-Finger, Spring
7:7	322-9	1	Screw-HH
7:8	3296-29	1	Nut-Lock, NI
7:9	3290-354	2	Nut-Speed
7:10	108-6496	2	Switch (W/Boot)
7:11	95-3003	4	Screw-PPHTF
7:12	3256-3	1	Washer-Flat
8	32149-8	2	Nut-Keps
9	120-5261	1	Control-Throttle

Ref.	Part Number	Qty.	Description
10	112-9179	1	Plate-Cover
11	3273-26	2	Screw-HSH
12	3290-378	2	Tie-Cable
13	27-2360	1	Switch
13:1	218-446	1	Nut-Hex
13:2	218-447	1	Washer-Lock
14	107-9529	1	Decal-Instrument
15	100-8071	1	Lamp-Warning
16	100-8072	1	Switch-Rocker, On-None-(On)
17	92-2538	1	Module-Timer
18	3234-21	2	Screw-HHF
19	104-7201	2	Nut-HF, NI
22	99-7420	1	Plug-Hole
23	107-9097	1	Controller-Glow
25	32144-19	2	Screw-SHWH
26	112-9181	1	Plate-Boot
27	3218-3	1	Nut-Jam
29	93-5961	1	Boot-Lever
30	233-42	1	Knob

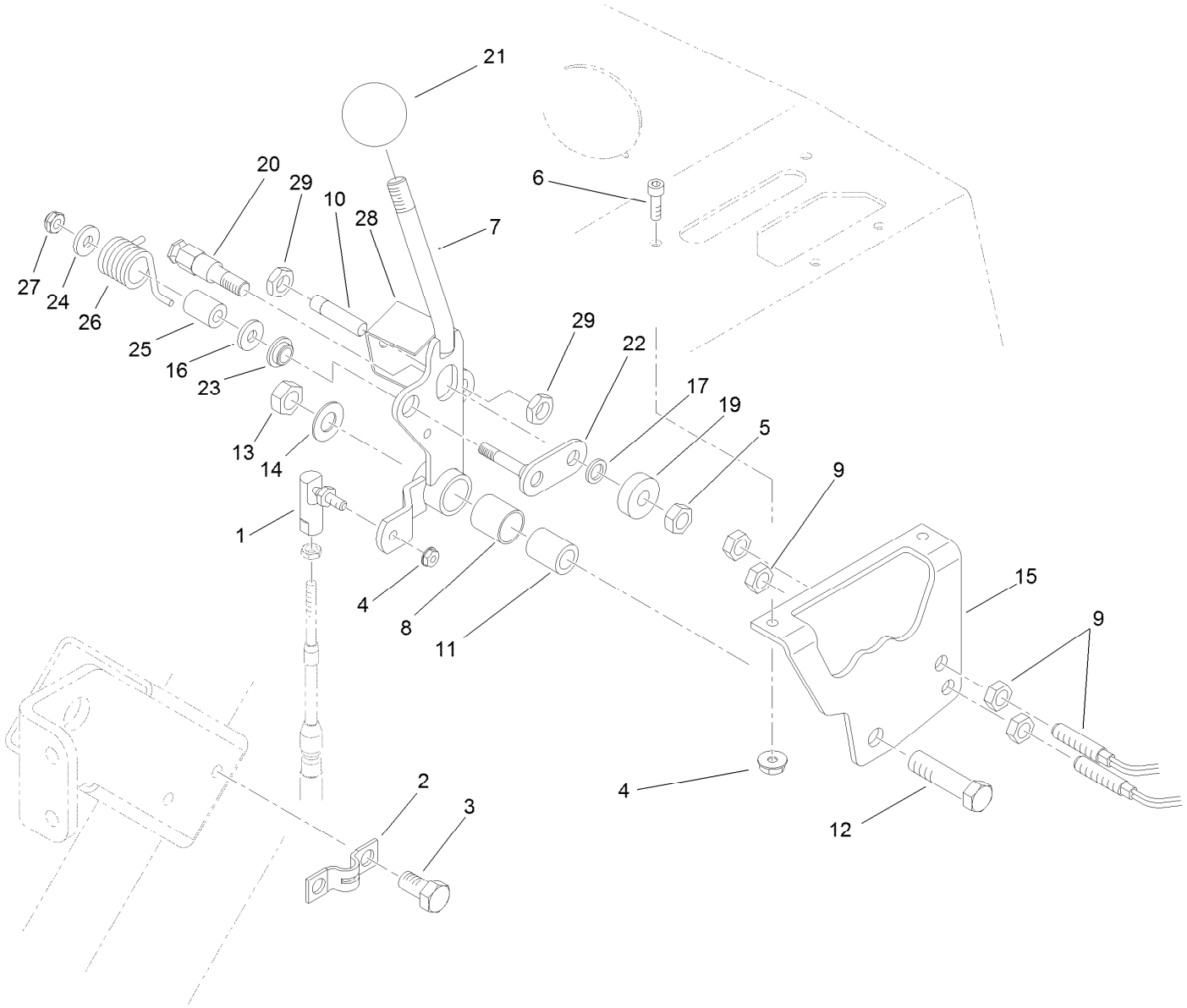

Functional Control Lever Assembly

Ref.	Part Number	Qty.	Description
1	2411-38	1	Joint-Ball
2	93-2279	1	Clamp-Cable
3	32104-32	2	Screw-HWH
4	32149-8	3	Nut-Keps
5	33024-00	1	Nut-Lock, NI
6	3273-26	2	Screw-HSH
7	94-9611	1	Handle
8	256-311	1	Bushing-Split
9	112-0278	2	Switch-Reed
10	120-5348	1	Actuator-Switch
11	94-1378	1	Tube-Pivot, Handle
12	33115-040	1	Screw-HH
13	33025-00	1	Nut-Lock, NI
14	3256-24	1	Washer-Flat

Ref.	Part Number	Qty.	Description
15	94-6398	1	Bracket-Traction
16	3256-23	1	Washer-Plain
17	75-5470	1	Spacer-Bearing
19	251-259	1	Bearing-Ball
20	94-9617	1	Pin-Spring
21	233-42	1	Knob
22	120-3198	1	Roller-Pivot
23	94-9619	1	Bushing
24	3256-67	1	Washer
25	94-9618	1	Spacer-Spring
26	94-9620	1	Spring-Torsion
27	33023-00	1	Nut-Lock
28	106-6356	1	Shield-Switch
29	117-4059	2	Nut-Hex

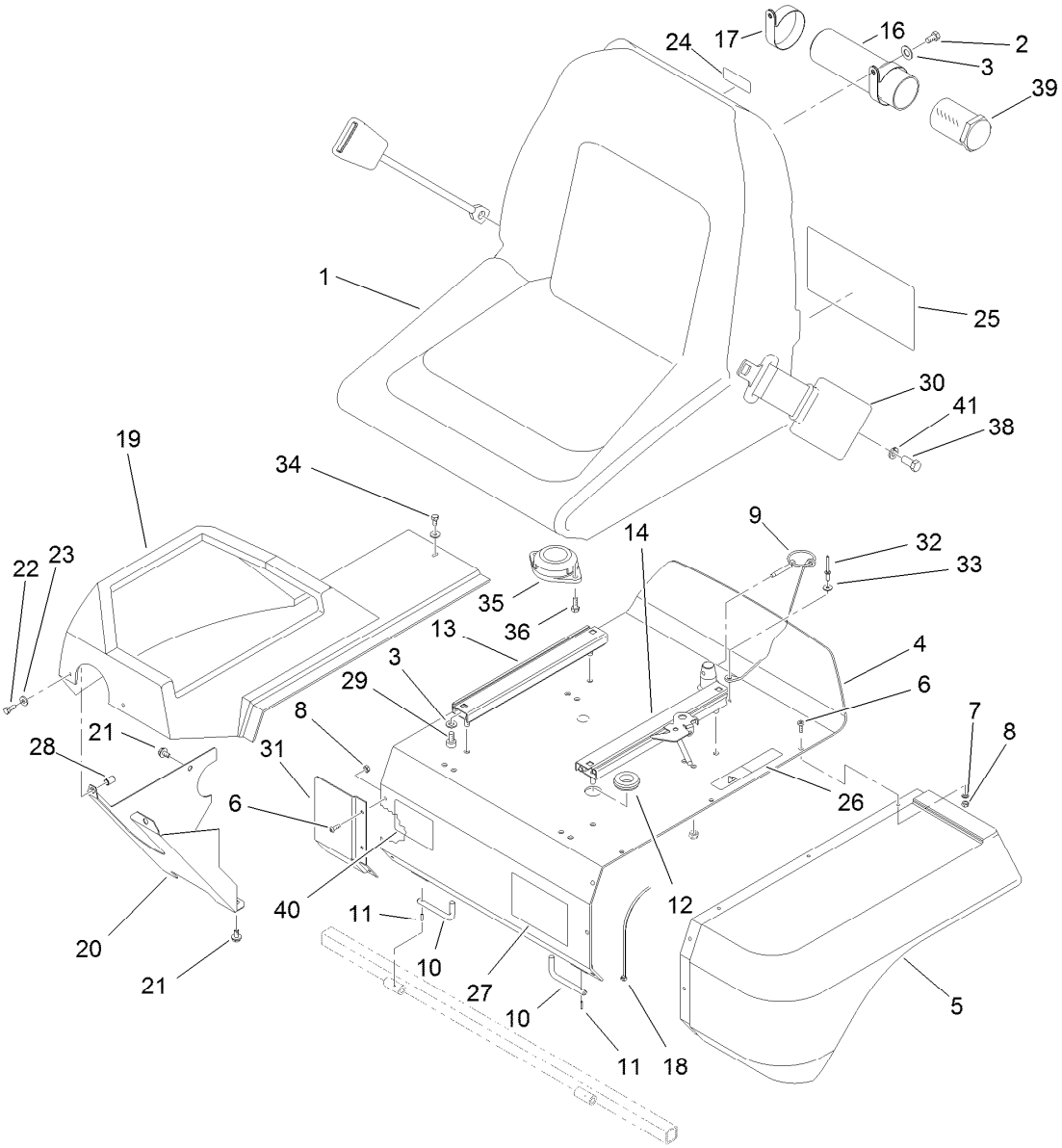

Seat Assembly

Ref.	Part Number	Qty.	Description
1	104-4620	1	Seat
2	3234-7	2	Screw-HHF
3	3256-23	4	Washer-Plain
4	93-2135-03	1	Seat Support ASM
5	93-2128	1	Panel-Base, Seat
6	3274-39	9	Screw-HSBH
7	3256-77	6	Washer-Flat
8	3296-12	9	Nut-Lock, NI
9	77-3780	1	Pin ASM-Lynch
10	93-2422	2	Rod-Pivot, Seat
11	32121-7	2	Pin-Roll, Slotted
12	237-100	1	Grommet
13	92-8990	1	Adjuster-Seat, Non-Locking
14	92-8991	1	Adjuster (W/Latch)
16	104-7050	1	Tube-Manual
17	2412-133	2	Clamp-R
18	3290-378	1	Tie-Cable
19	99-4208	1	Shroud-Console
20	94-4547-03	1	Panel-Lower, RH
21	32104-32	2	Screw-HWH
22	33113-016	2	Screw-HH

Ref.	Part Number	Qty.	Description
23	3256-1	3	Washer-Flat
24	93-6686	1	Decal-Oil, HYD
25	121-9500	1	Decal-Service, English
25	121-9501	1	Decal-Service, Spanish
25	121-9502	1	Decal-Service, French
25	121-9503	1	Decal-Service, German
25	121-9504	1	Decal-Service, Swedish
25	121-9505	1	Decal-Service, Italian
25	121-9506	1	Decal-Service, Portuguese
25	121-9507	1	Decal-Service, Norwegian
25	121-9508	1	Decal-Service, Finnish
25	121-9509	1	Decal-Service, Danish
25	121-9510	1	Decal-Service, Dutch
25	121-9511	1	Decal-Service, Japanese
26	93-6689	1	Decal-No Riders
27	94-2579	1	Decal
28	93-5447	2	Nut-Clinch
29	3274-12	4	Screw-HSH
30	100-4928	1	Belt-Seat
31	94-4546-03	1	Panel-Extension
32	3290-282	1	Rivet-Blind

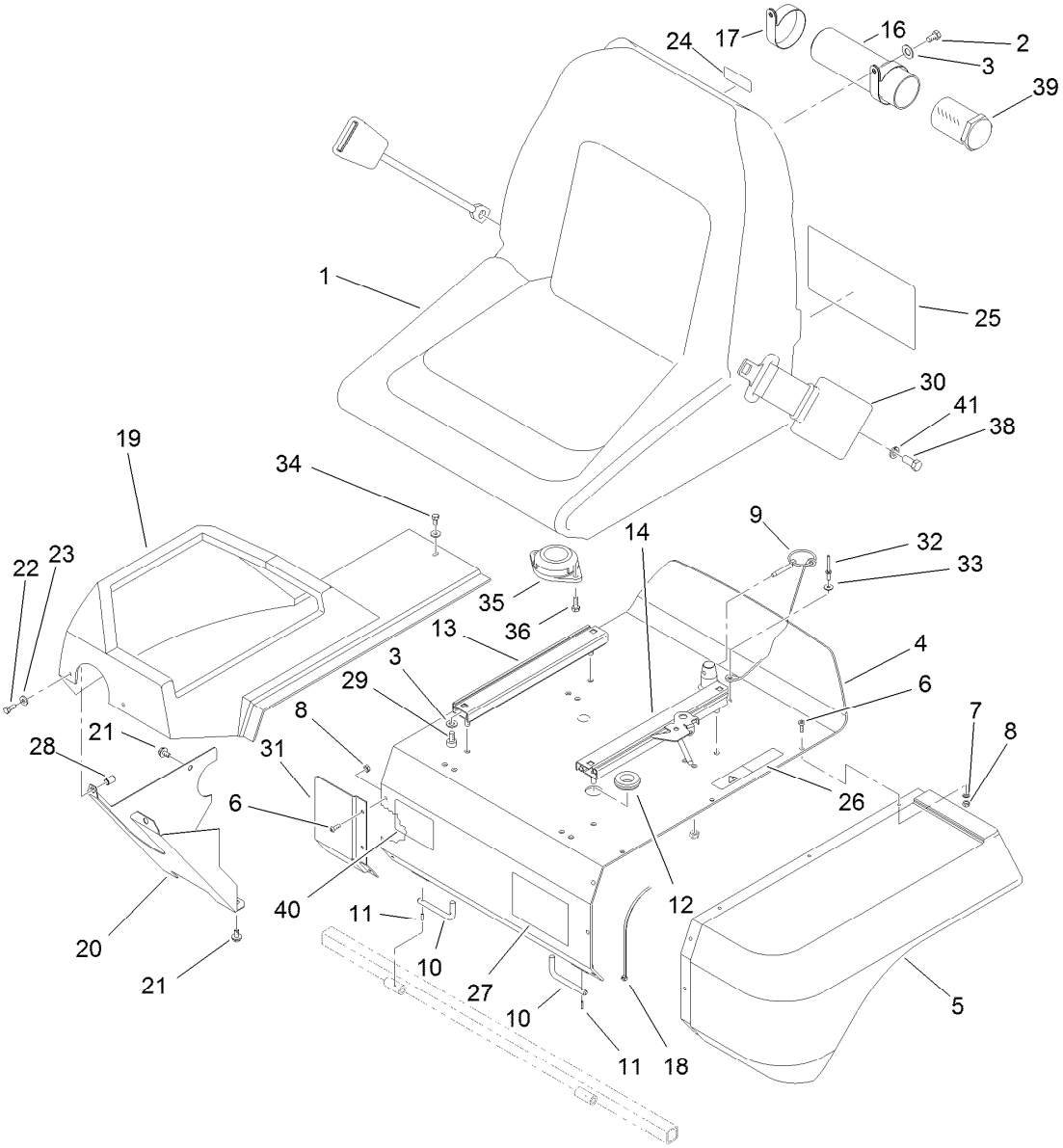

Seat Assembly (continued)

Ref.	Part Number	Qty.	Description
33	3256-49	1	Washer-Plain
34	33113-012	1	Screw-HH
35	92-6282	1	Switch-Seat
36	32144-10	2	Screw-HWH

Ref.	Part Number	Qty.	Description
38	3212-4	2	Screw-HH
39	104-7048	1	Cap-Housing
40	115-8156	1	Decal-Speed, Clip
41	3253-6	2	Washer-Lock

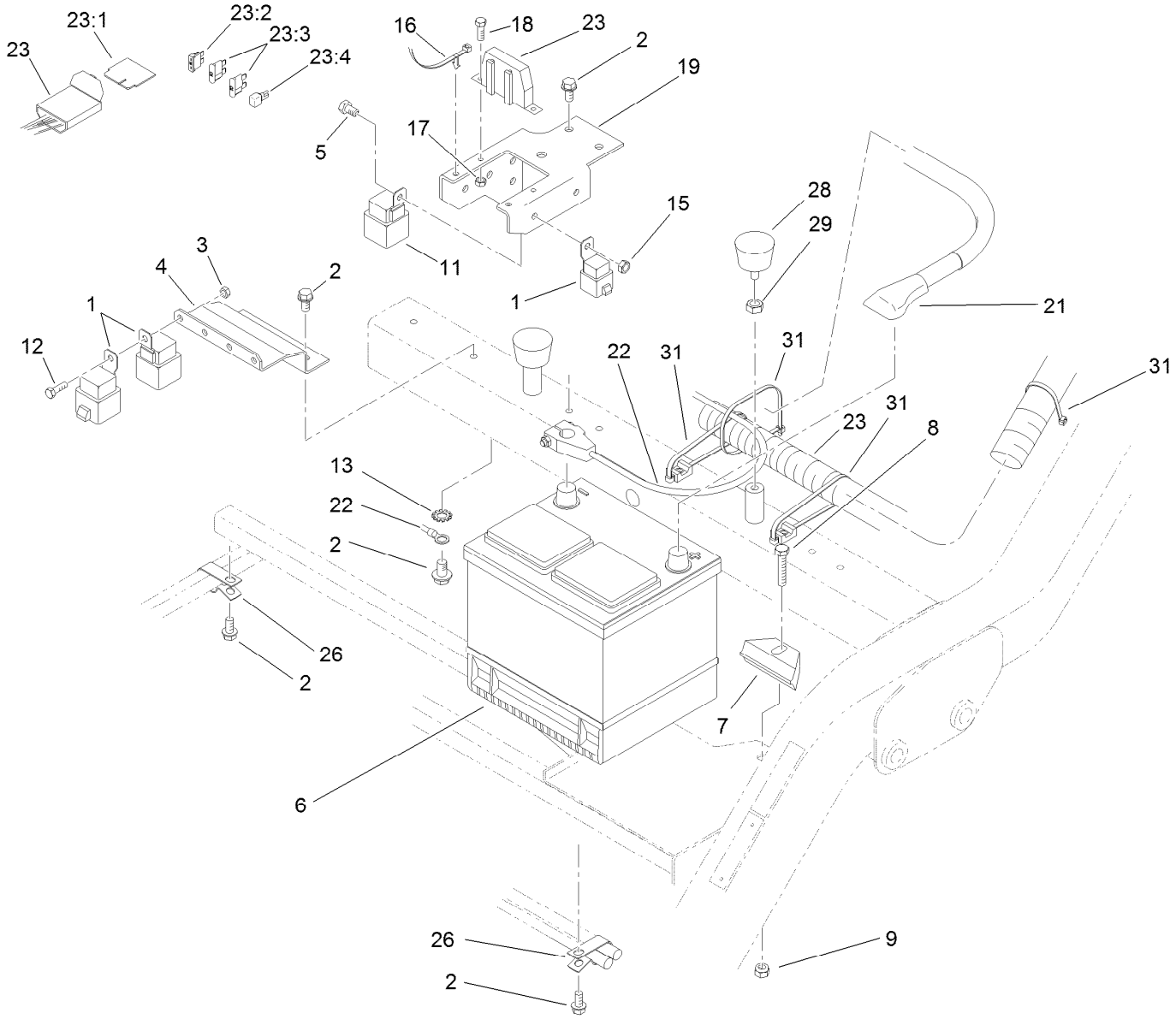

Battery and Electrical Component Assembly

Ref.	Part Number	Qty.	Description
1	99-7430	9	Relay-Mini
2	32104-32	7	Screw-HWH
3	104-7201	4	Nut-HF, NI
4	93-2169-01	1	Bracket-Relay
5	3290-134	1	Screw
6	106-5187	1	Battery, 525 CCA W/O Electrolyte
7	66-2490	1	Retainer-Battery
8	3234-19	1	Screw-HHF
9	104-8301	1	Nut-HF, NI
11	99-7435	1	Relay
12	99-6810	4	Screw-HHF
13	3254-2	1	Washer-Lock, Internal
15	3296-2	1	Nut-Lock, NI
16	32180-030	2	Clip-Tie

Ref.	Part Number	Qty.	Description
17	32149-7	2	Nut-Keps
18	32105-13	2	Screw-HWH
19	119-3537-01	1	Bracket-Fuse Block
21	95-8853	1	Cable-Battery, Positive
22	99-8167	1	Cable-Battery, Negative
23	120-6306	1	Harness-Wire
23:1	92-3188	2	Diode-Board, Circuit
23:2	109355	1	Fuse-Blade, 15 Amp
23:3	218-578	2	Fuse-Blade, 10 Amp
23:4	104-4022	1	Resistor-75 Ohm
26	92-5753	2	Clamp-Hose
28	68-3270	2	Bumper-Rubber
29	3218-2	2	Nut-Hex Jam
31	3290-378	6	Tie-Cable

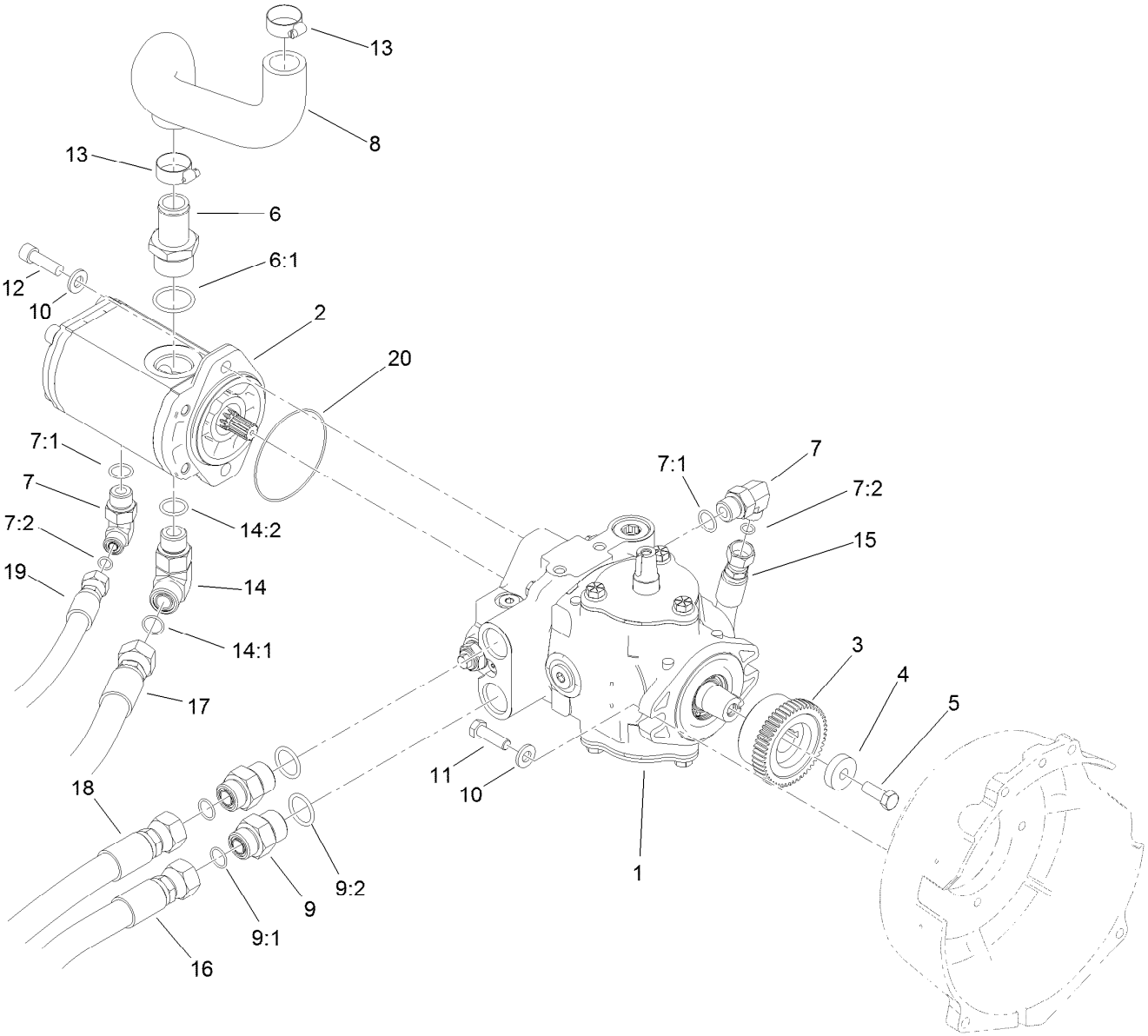

Hydrostat and Gear Pump Drive Assembly

Ref.	Part Number	Qty.	Description
1	121-9557	1	Pump-Hydro
2	114-9956	1	HYD Gear Pump ASM
3	119-4418	1	Coupling
4	117-3657	1	Spacer
5	3211-4	1	Screw-HH
6	354-78	1	Fitting-STR
6:1	237-146	1	O-Ring
7	340-18	2	Fitting-HYD, 90 DEG
7:1	237-79	1	O-Ring
7:2	237-22	1	O-Ring
8	99-1905	1	Hose-Inlet, Pump
9	340-8	2	Fitting-Straight
9:1	237-65	1	O-Ring
9:2	237-81	1	O-Ring

Ref.	Part Number	Qty.	Description
10	100-4852	4	Washer-Hardened
11	323-7	2	Screw-HH
12	3274-1	2	Screw-HSH
13	2412-34	2	Clamp-Hose
14	340-17	1	Fitting-Elbow, 90 DEG
14:1	237-65	1	O-Ring
14:2	237-80	1	O-Ring
15	121-2562	1	HYD Hose ASM
16	99-4220	1	HYD Hose ASM
17	99-4216	1	HYD Hose ASM
18	99-4217	1	Hose-Hydraulic
19	105-4339	1	Hose-HYD
20	353-949	1	O-Ring

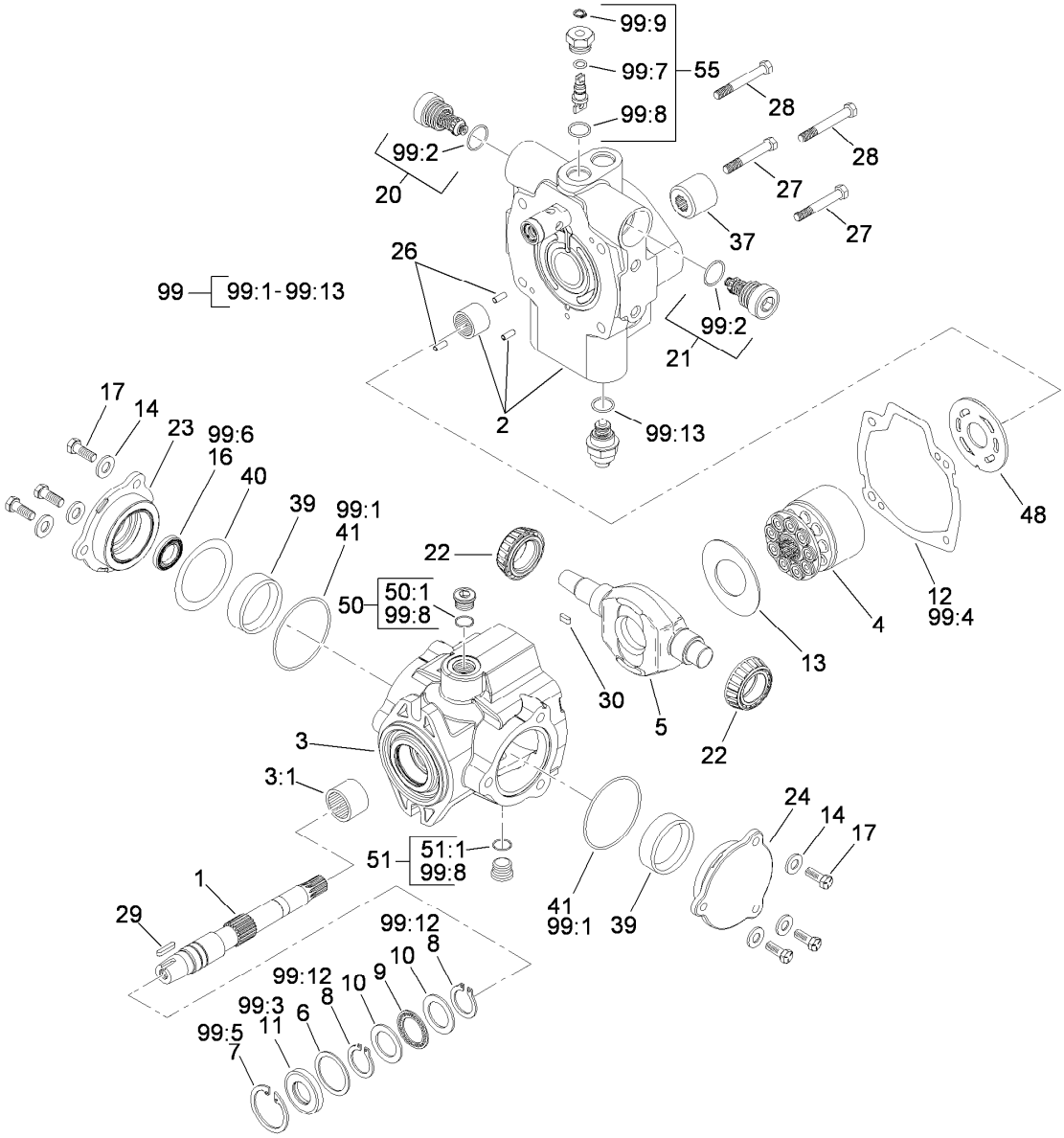

Hydraulic Pump Assembly No. 121-9557

Ref.	Part Number	Qty.	Description
1	119-7148	1	Shaft-Drive, Tapered
2	121-9574	1	Endcover ASM
3	100-3176	1	Housing ASM
3:1	94-6363	1	Bearing
4	76-6070	1	Rotating Kit
5	100-3175	1	Camplate
6	33-3720	1	Washer
7	32151-13	1	Ring-Retaining
8	32151-29	2	Ring-Retaining
9	252-66	1	Bearing-Thrust
10	252-71	2	Washer-Thrust
11	104-4861	1	Seal-Shaft
12	33-4930	1	Gasket-Housing
13	98-4635	1	Insert-Plate, Cam
14	105-9762	6	Washer
16	76-6190	1	Seal-Shaft
17	98-4640	6	Screw-Cap
20	120-1989	1	Relief Valve ASM

Ref.	Part Number	Qty.	Description
21	120-1989	1	Relief Valve ASM
22	98-4639	2	Bearing-Cone
23	98-4645	1	Plate-Cover
24	98-4644	1	Plate-Cover
26	76-6150	2	Pin-Dowel
27	76-6160	2	Capscrew
28	76-6170	2	Capscrew
29	120-5751	1	Key
30	94-3646	1	Key
37	74-9040	1	Coupler
39	104-4046	2	Bearing-Cup
40	100-3182	1	Shim Kit
41	100-3179	2	O-Ring
48	100-3180	1	Plate-Valve
50	74-9280	1	Plug ASM
50:1		1	O-Ring ■
51	74-9280	1	Plug ASM
51:1		1	O-Ring ■

● Not illustrated

■ Not serviced separately

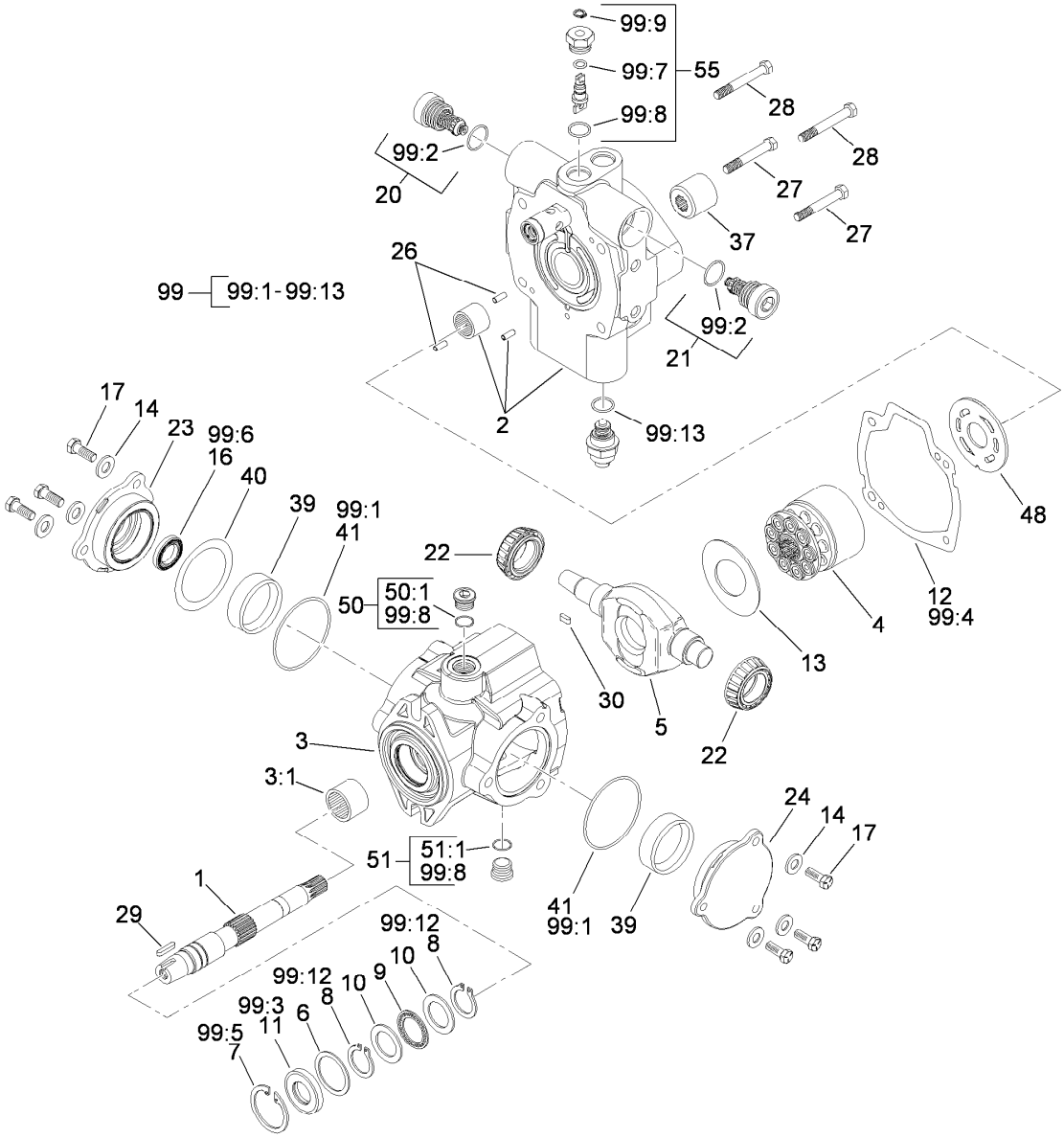

Hydraulic Pump Assembly No. 121-9557 (continued)

Ref.	Part Number	Qty.	Description
55	105-3811	1	Valve-Bypass
99	120-5754	1	Seal Kit
99:1		2	O-Ring ■
99:2		2	O-Ring ■
99:3		1	Seal-Shaft ■
99:4		1	Gasket ■
99:5		1	Ring-Retaining ■
99:6		1	Seal-Shaft ■
99:7		1	O-Ring ■
99:8		5	O-Ring ■
99:9		1	Ring-Retaining ■
99:10		1	O-Ring (Not Used For This Configuration) ● ■
99:11		1	O Ring-Molded (Not Used For This Configuration) ● ■
99:12		2	Ring-Retaining ■
99:13		1	O-Ring ■

● Not illustrated

■ Not serviced separately

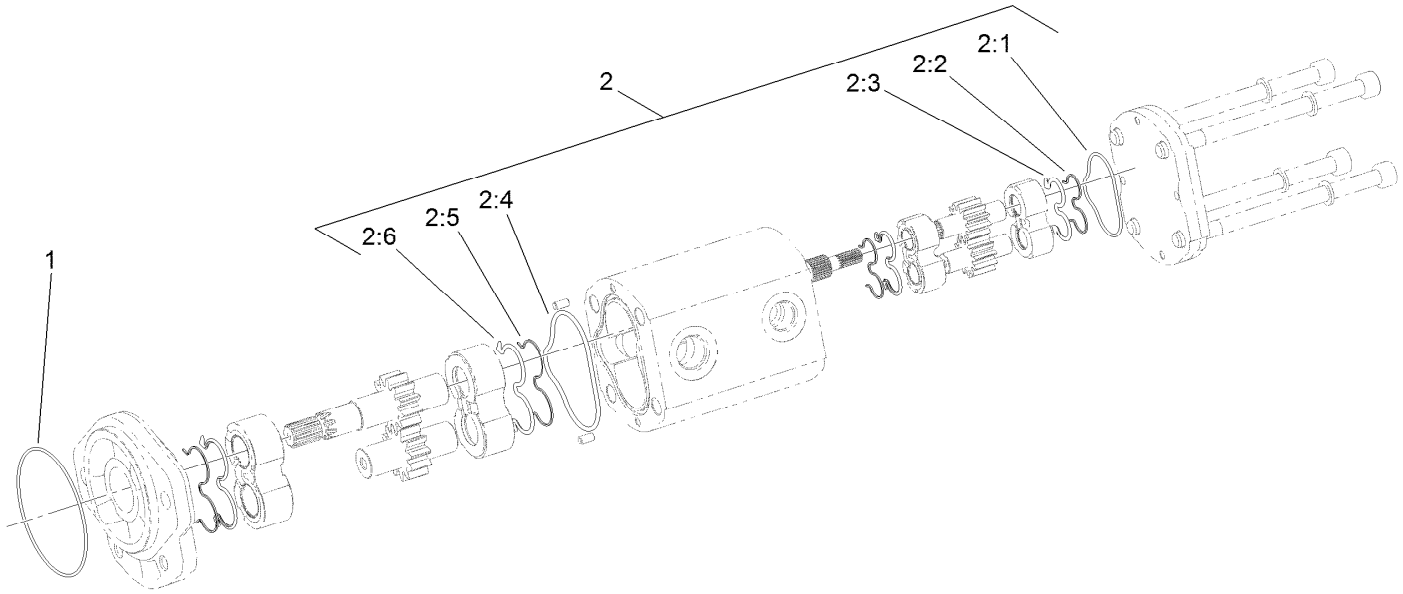

Hydraulic Gear Pump Assembly No. 114-9956

Ref.	*Part Number*	*Qty.*	*Description*
1	353-949	1	O-Ring
2	119-7134	1	Kit-Seal
2:1		1	O-Ring ●
2:2		2	Seal-Extrusion, Anti ●
2:3		2	Seal-Backup ●
2:4		1	O-Ring ●
2:5		2	Seal-Extrusion, Anti ●
2:6		2	Seal-Backup ●

● Not serviced separately

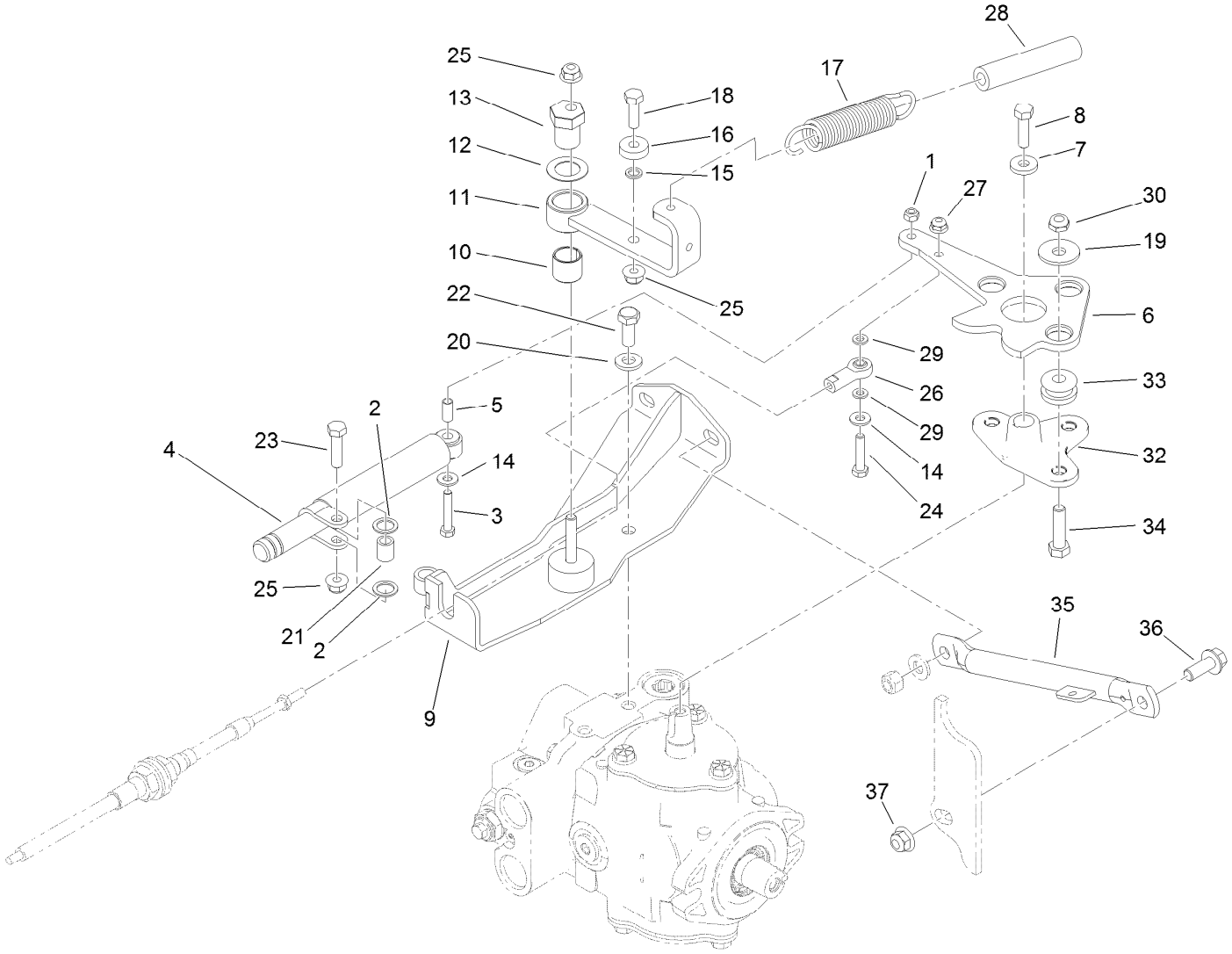

Neutral System Assembly

Ref.	Part Number	Qty.	Description
1	33023-00	1	Nut-Lock
2	94-8196	2	Washer-Nylon
3	33113-035	1	Screw-HH
4	76-8870	1	Damper-Lever
5	94-1312	1	Spacer-Pivot
6	94-3488-03	1	Lever-Pump
7	88-7200	1	Washer-Flat
8	3210-6	1	Screw-HH
9	120-5263-03	1	Mount-Muffler, Upper
10	94-9609	1	Bushing-Straight
11	94-4527	1	Arm-Neutral
12	3-6498	1	Washer-Thrust
13	93-2111	1	Stud-Traction
14	3256-22	2	Washer-Flat
15	75-5470	1	Spacer-Bearing
16	251-259	1	Bearing-Ball
17	99-4254	1	Spring-Extension
18	322-5	1	Screw-HH

Ref.	Part Number	Qty.	Description
19	93-8806	3	Washer-Hardened
20	100-4852	2	Washer-Hardened
21	94-8197	1	Tube-Pivot
22	323-5	2	Screw-HH
23	322-6	1	Screw-HH
24	321-8	1	Screw-HH
25	104-8300	3	Nut-HF, NI
26	2411-41	1	Rod End-Ball Joint
27	104-7201	1	Nut-HF, NI
28	99-4251	1	Hose-Dampener
29	33093-00	2	Washer-Flat
30	3296-59	3	Nut-Lock, NI
32	117-9500	1	Plate-Pivot
33	63-9750	3	Mount
34	323-29	3	Screw-HH
35	120-5318-03	1	Support-Exhaust
36	3234-42	1	Screw-HHF
37	104-8301	1	Nut-HF, NI

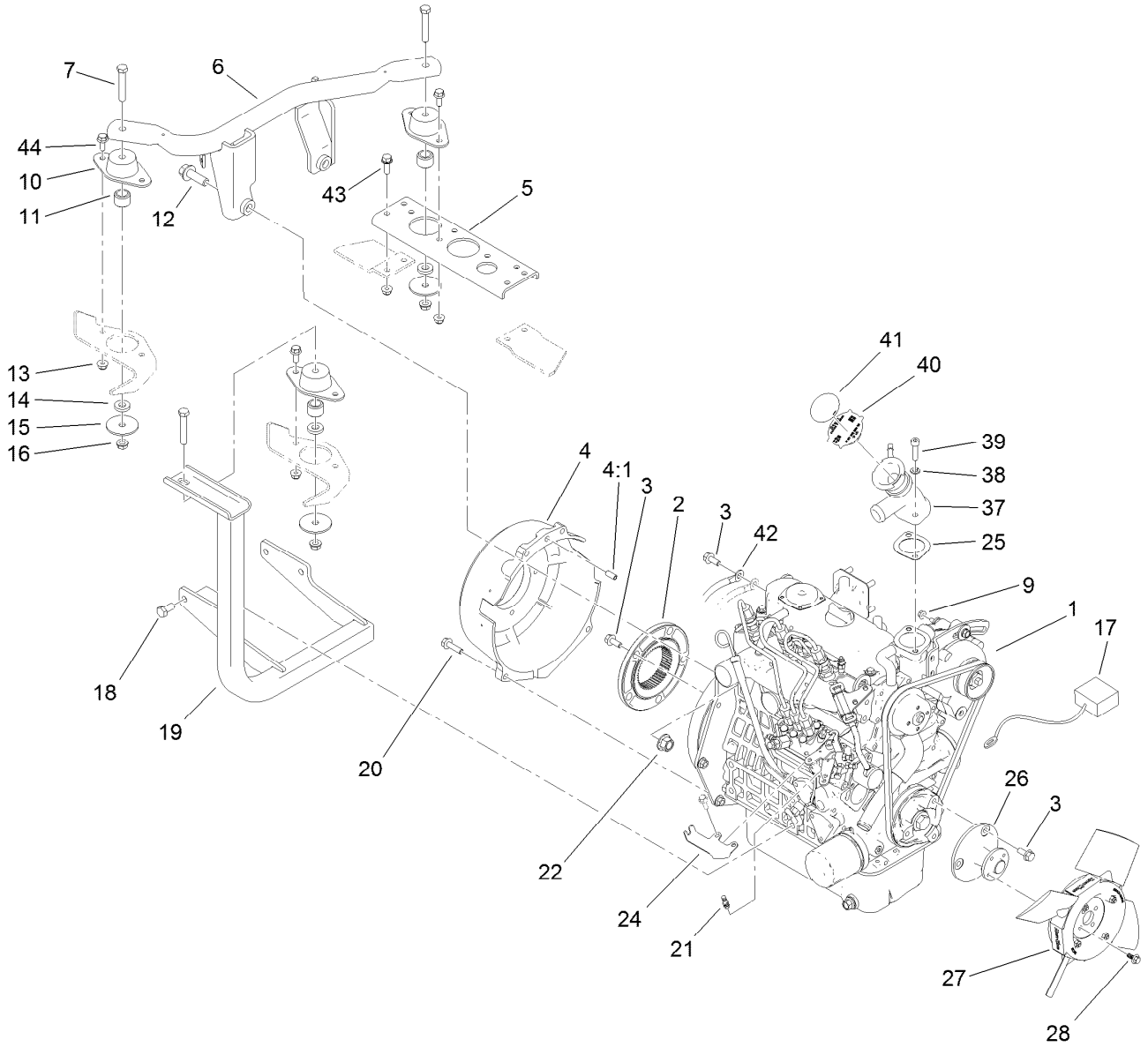

Engine Installation Assembly

Ref.	Part Number	Qty.	Description
1	127-9656	1	Engine-Kubota, D902
2	115-8727	1	Flange-Coupling
3	33104-020	9	Screw-HHF
4	119-4412	1	Bellhousing
4:1	32121-123	1	Pin-Roll
5	93-2020-01	1	Bracket-Support
6	120-5313-03	1	Mount-Engine
7	323-11	3	Screw-HH
9	33003-00	1	Nut-HF
10	83-1030	3	Mount-Engine
11	94-4538	3	Spacer-Mount
12	100-6116	2	Screw-HHF
13	104-8300	10	Nut-HF, NI
14	66-6480	3	Washer
15	83-1040	3	Washer-Flat
16	3290-357	3	Nut-HSF
17	99-3441	1	Harness-Wire, Fusible Link
18	63-7790	4	Screw-Cap
19	119-4424-03	1	Support-Engine
20	33104-030	4	Screw-HHF
21	108-5928	1	Swivel-Stop, Cable
22	99-5107	2	Nut-Lock
24	120-5316	1	Bracket-Support, Throttle
25	105-3748	1	Gasket-Thermostat
26	119-4421	1	Adaptor-Fan
27	120-5287	1	Fan-35 DEG
28	99-6810	4	Screw-HHF
37	119-3532	1	Blade (Discontinued)
38	3253-4	2	Washer-Lock
39	94-3559	2	Screw-HSH
40	66-3240	1	Cap-Radiator
41	106-5976	1	Decal-Warning
42	120-6325	1	Harness-Wire, Ground
43	3234-29	4	Screw-HHF
44	3234-47	6	Screw-HHF

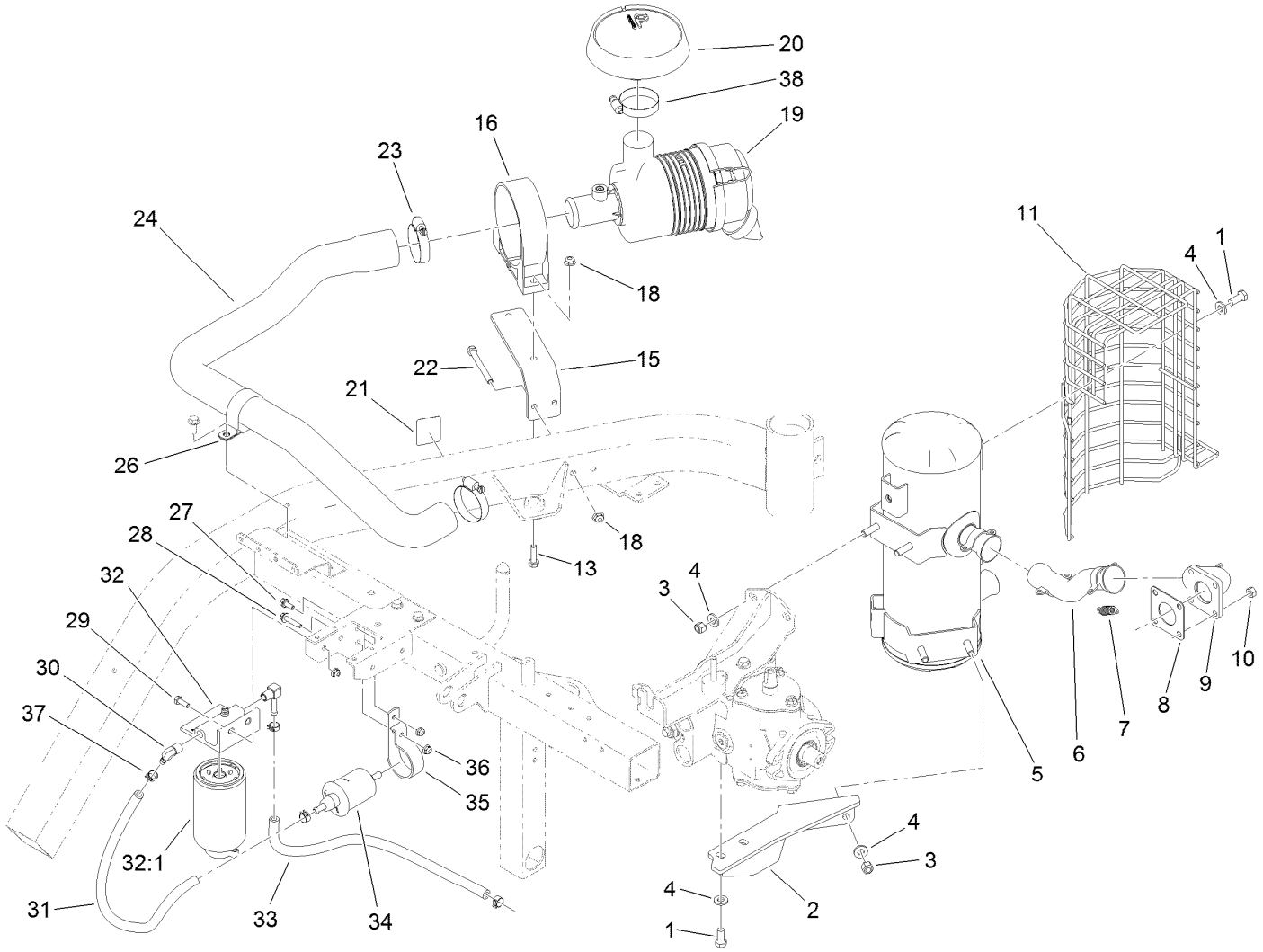

Air Cleaner, Fuel Filter and Exhaust Assembly

Ref.	Part Number	Qty.	Description
1	323-5	6	Screw-HH
2	119-4474	1	Bracket-Muffler
3	32152-2	4	Nut-Lock, Cone
4	100-4852	10	Washer-Hardened
5	120-1950	1	Muffler
6	114-8013	1	Pipe-Exhaust
7	104-6478	4	Spring-Extension
8	99-8343	1	Gasket-Muffler
9	114-8009	1	Plate-Exhaust
10	33014-00	4	Nut-Hex
11	115-8718-03	1	Shield-Muffler
13	322-16	2	Screw-HH
15	99-4203	1	Bracket-Cleaner, Air
16	95-5806	1	Bracket-Mounting, Air Cleaner
18	104-8300	4	Nut-HF, NI
19	95-5805	1	Air Cleaner ASM
20	120-4848	1	Hood-Inlet, Air

Ref.	Part Number	Qty.	Description
21	93-7275	1	Decal-Fluid, Starting
22	322-20	2	Screw-HH
23	2412-92	2	Clamp-Hose
24	119-3536	1	Hose-Air Cleaner
26	115-9469	1	Clamp-R
27	3234-33	1	Screw-HHF
28	3234-21	1	Screw-HHF
29	321-4	2	Screw-HH
30	353-781	2	Fitting-HYD, 90
31	106-1126	1	Hose-Fuel
32	110-9044	1	Separator-Filter
32:1	110-9049	1	Filter-Spin On, Fuel/Water
33	114-4028	1	Hose-Fuel
34	110-8806	1	Pump-Fuel
35	110-8817	1	Bracket-Pump, Fuel
36	104-7201	4	Nut-HF, NI
37	92-2379	4	Clamp-Hose
38	2412-92	1	Clamp-Hose

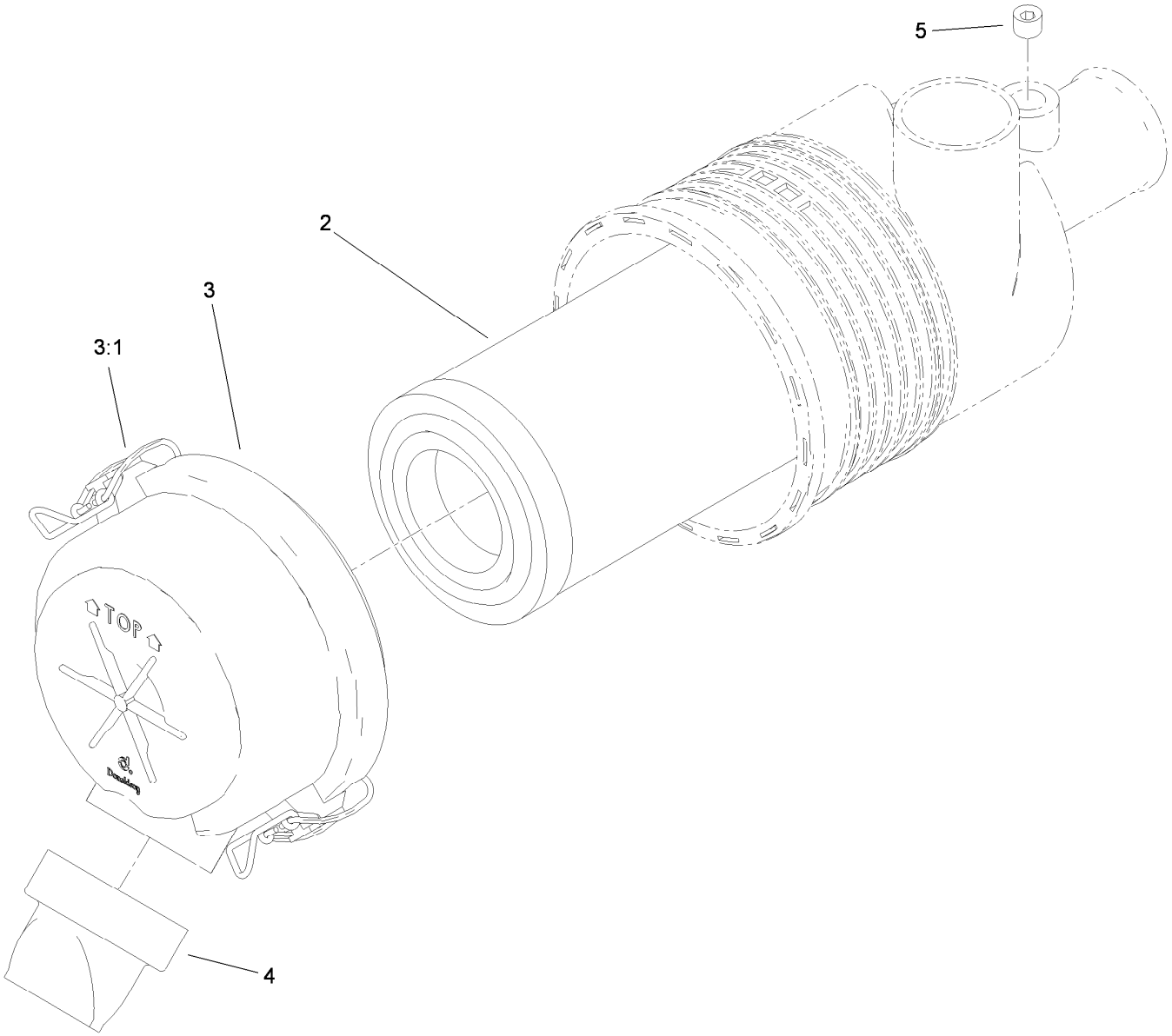

Air Cleaner Assembly No. 95-5805

Ref.	*Part Number*	*Qty.*	*Description*
2	108-3811	1	Filter-Air
3	94-3652	1	Cover ASM
3:1	1-643283	2	Latch-Cleaner, Air
4	87-9400	1	Valve-Vacuator
5	285-17	1	Plug-Pipe

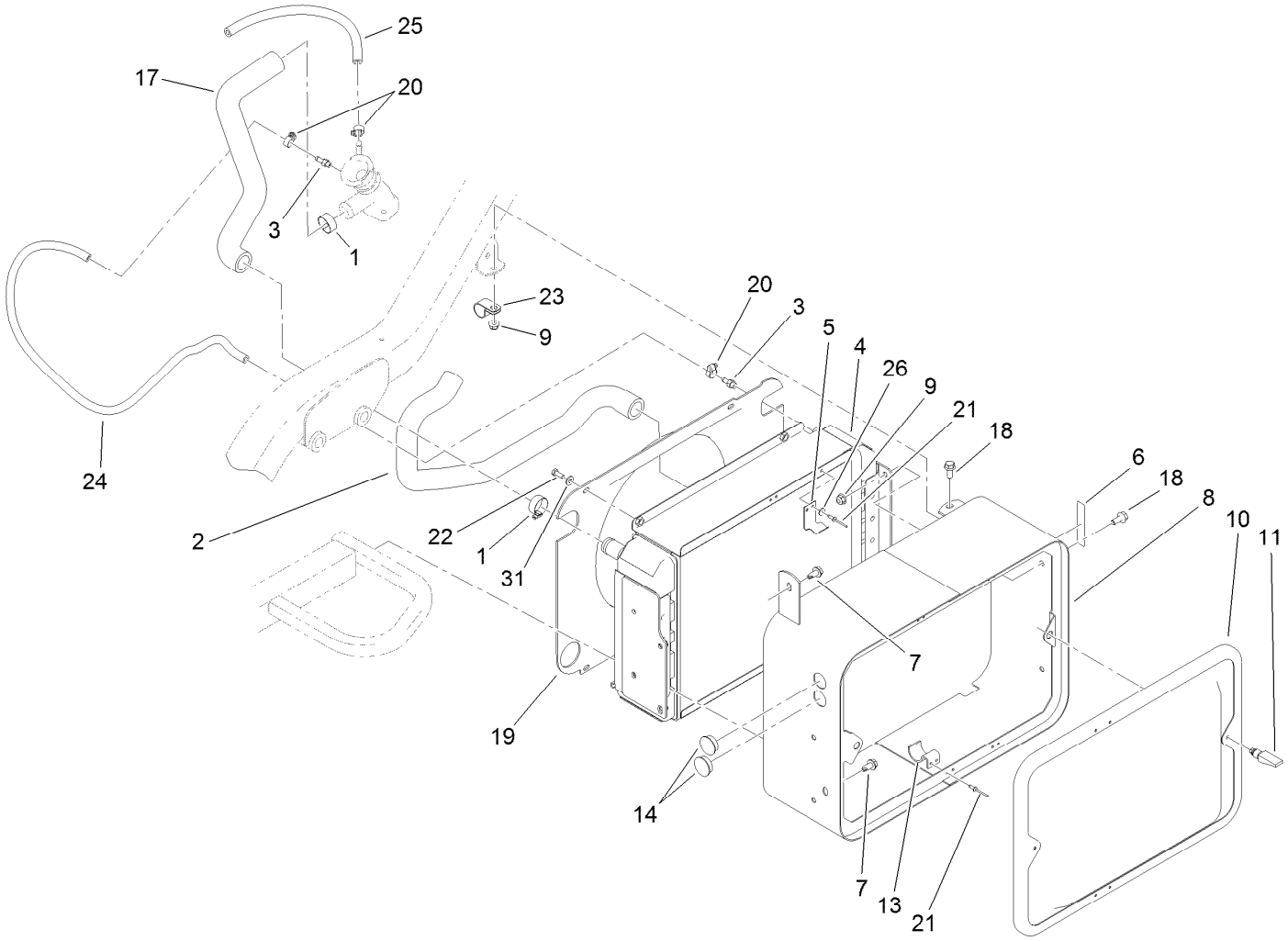

Radiator Assembly

Ref.	Part Number	Qty.	Description
1	2412-34	4	Clamp-Hose
2	119-3554	1	Hose-Radiator, Lower
3	304-73	2	Fitting-Straight
4	119-3555	1	Radiator
5	104-7736	1	Bracket-Cooler, Upper
6	93-6681	1	Decal-Warning, Fan
7	32104-32	2	Screw-HWH
8	106-9056-01	1	Support-Radiator
9	104-8300	5	Nut-HF, NI
10	100-3172-03	1	Screen ASM
11	74-5950	2	Latch-Swell
13	93-2424	2	Bracket-Cooler, Lower

Ref.	Part Number	Qty.	Description
14	94-4528	2	Plug
17	119-3556	1	Hose-Radiator, Upper
18	3234-47	5	Screw-HHF
19	119-3571	1	Shroud-Fan
20	2412-108	3	Clamp-Worm
21	3269-15	6	Rivet-Pop
22	33113-016	4	Screw-HH
23	2412-41	1	Clamp-R
24	109-0286	1	Hose-Fuel
25	110-4101	1	Hose-Fuel
26	3269-6	2	Washer-Flat
31	3256-22	4	Washer-Flat

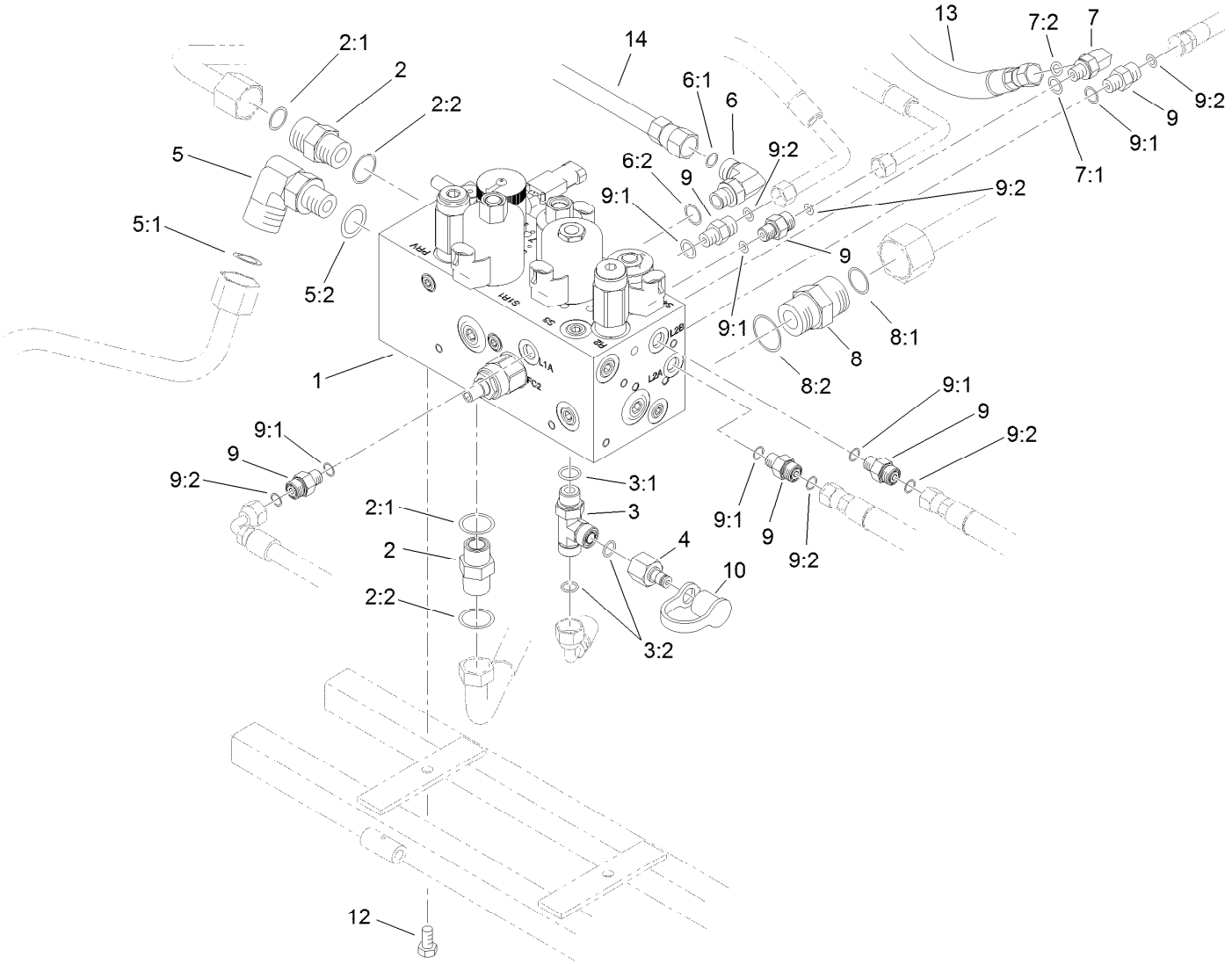

Manifold Block Installation Assembly

Ref.	Part Number	Qty.	Description
1	112-9197	1	Manifold ASM W/Backlap
2	340-7	2	Fitting-Straight
2:1	237-65	1	O-Ring
2:2	237-80	1	O-Ring
3	340-109	1	Fitting-Tee
3:1	237-79	1	O-Ring
3:2	237-30	2	O-Ring
4	100-5616	1	Fitting
5	340-17	1	Fitting-Elbow, 90 DEG
5:1	237-65	1	O-Ring
5:2	237-80	1	O-Ring
6	340-77	1	Fitting-Elbow, 90 DEG
6:1	237-22	1	O-Ring
6:2	237-42	1	O-Ring

Ref.	Part Number	Qty.	Description
7	340-97	1	Fitting-Elbow, 90 DEG
7:1	237-22	1	O-Ring
7:2	237-78	1	O-Ring
8	340-9	1	Fitting-STR
8:1	237-58	1	O-Ring
8:2	237-81	1	O-Ring
9	340-92	5	Fitting-Straight
9:1	237-78	1	O-Ring
9:2	237-21	1	O-Ring
10	354-79	1	Cap-Dust
12	33114-016	2	Screw-HH
13	112-0274	1	Hose-HYD
13:3	237-42	1	O-Ring ●
14	105-9790	1	Hose ASM

● Not illustrated

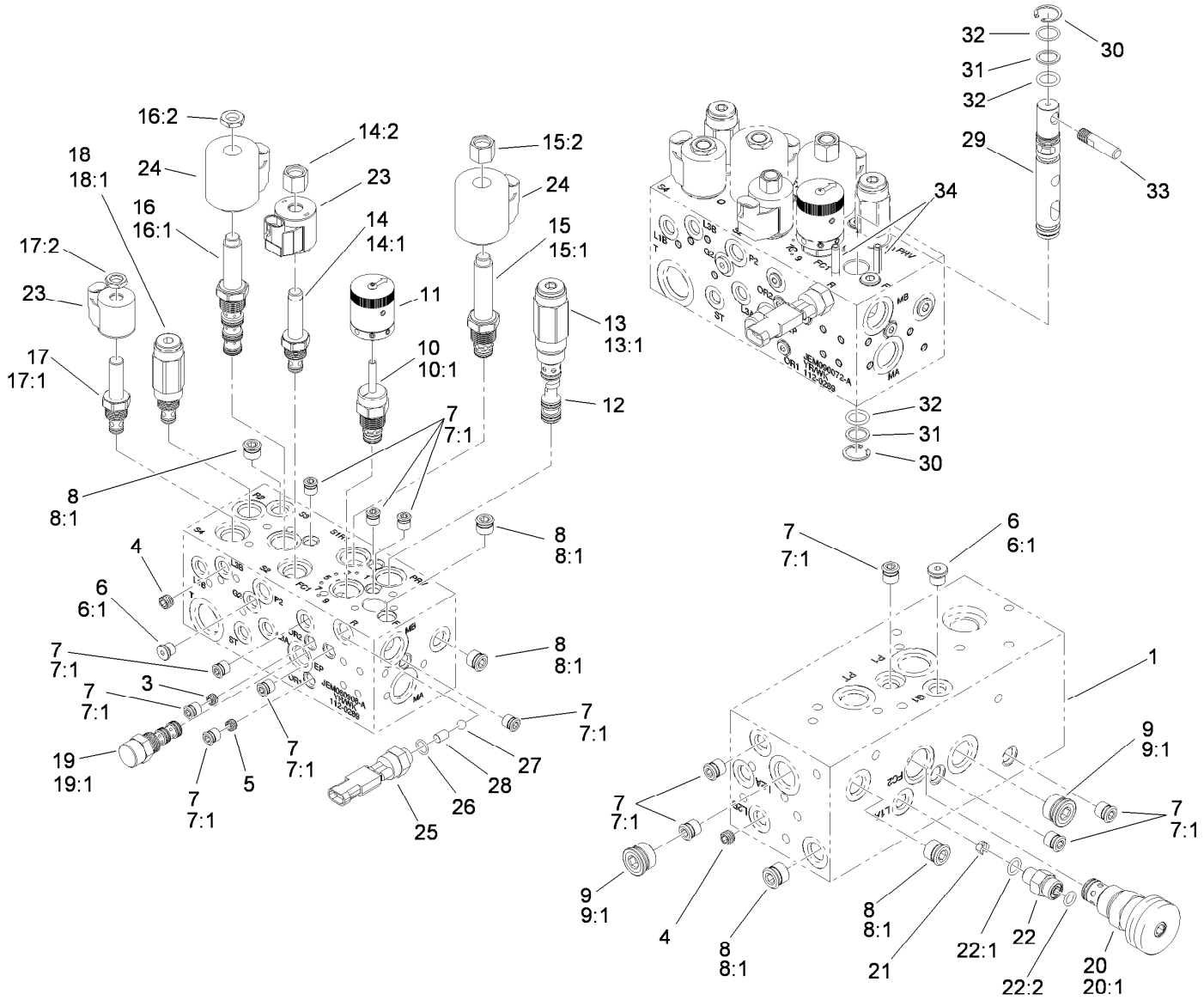

Hydraulic Manifold Assembly No. 112-9197

Ref.	Part Number	Qty.	Description
1		1	Body-Manifold ●
3	112-9202	1	Orifice-Flow, Control (.060)
4	110-8887	2	Plug-Orifice (0.055)
5	112-9203	1	Orifice-Control, Flow (.013)
6	353-990	2	Plug ASM
6:1	237-78	1	O-Ring
7	106-1025	13	Plug-HYD
7:1	237-78	1	O-Ring
8	106-1026	5	Plug-HYD
8:1	237-42	1	O-Ring
9	106-1027	2	Plug
9:1	237-79	1	O-Ring
10	110-8769	1	Valve-Control, Manual Flow
10:1	110-2633	1	Seal Kit
11	110-8767	1	Rotary Handle ASM
12	119-3506	1	Piston-Pilot
13	112-9205	1	Valve-Relief
13:1	105-9159	1	Seal Kit

Ref.	Part Number	Qty.	Description
14	107-7517	1	Valve-Solenoid
14:1	105-9156	1	Seal Kit
14:2	107-7812	1	Nut-Solenoid
15	110-8768	1	Valve-Relief, Solenoid (3000 PSI)
15:1	110-6316	1	Seal Kit
15:2	130-8180	1	Nut-Coil (9/16-24 Unef-2B)
16	110-8906	1	Valve-Solenoid
16:1	110-8908	1	Spool Valve Seal Kit
16:2	110-2634	1	Nut-Coil
17	112-9206	1	Solenoid Valve ASM
17:1	105-9156	1	Seal Kit
17:2	110-2634	1	Nut-Coil
18	133-8873	1	Valve-Relief
18:1	105-9156	1	Seal Kit
19	110-8988	1	Element-Logic
19:1	110-8773	1	Seal Kit
20	119-4136	1	Control-Flow

● Not serviced separately

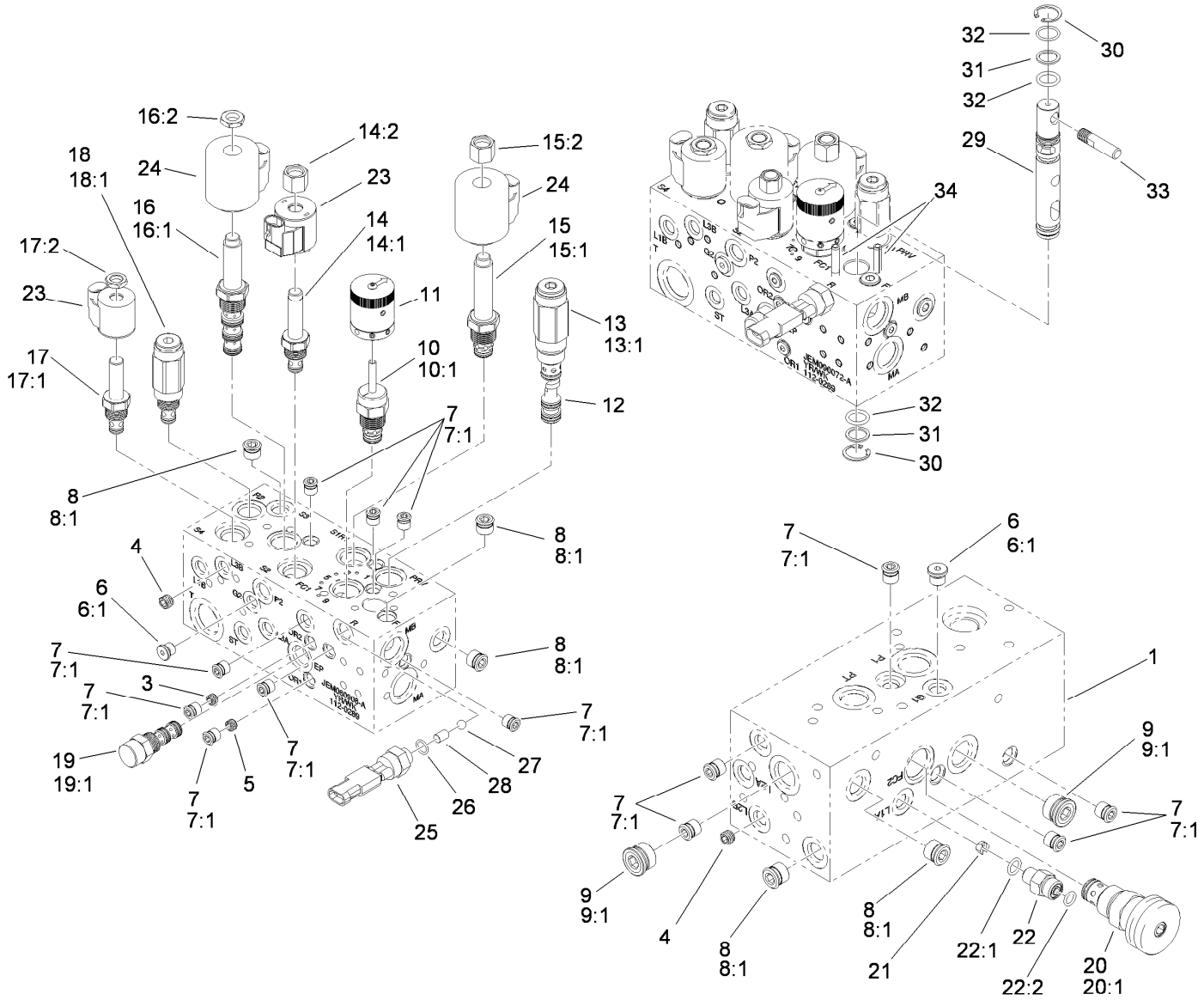

Hydraulic Manifold Assembly No. 112-9197 (continued)

Ref.	Part Number	Qty.	Description
20:1	110-2633	1	Seal Kit
21	110-8903	1	Orifice-Control, Flow (0.055)
22	340-92	1	Fitting-Straight
22:1	237-78	1	O-Ring
22:2	237-21	1	O-Ring
23	105-9333	2	Coil-12Vdc
24	110-2630	2	Coil-12Vdc
25	72-4320	1	Switch-Ball
26	110-8757	1	O-Ring

Ref.	Part Number	Qty.	Description
27	110-8762	1	Ball-Chrome
28	112-6533	1	Pin-Dowel
29	112-6536	1	Spool
30	112-6532	2	Ring-Retaining
31	112-6534	2	Ring-Back Up
32	117-4606	3	O-Ring
33	110-8758	1	Handle-Spool
34	112-6531	2	Pin-Spring

● Not serviced separately

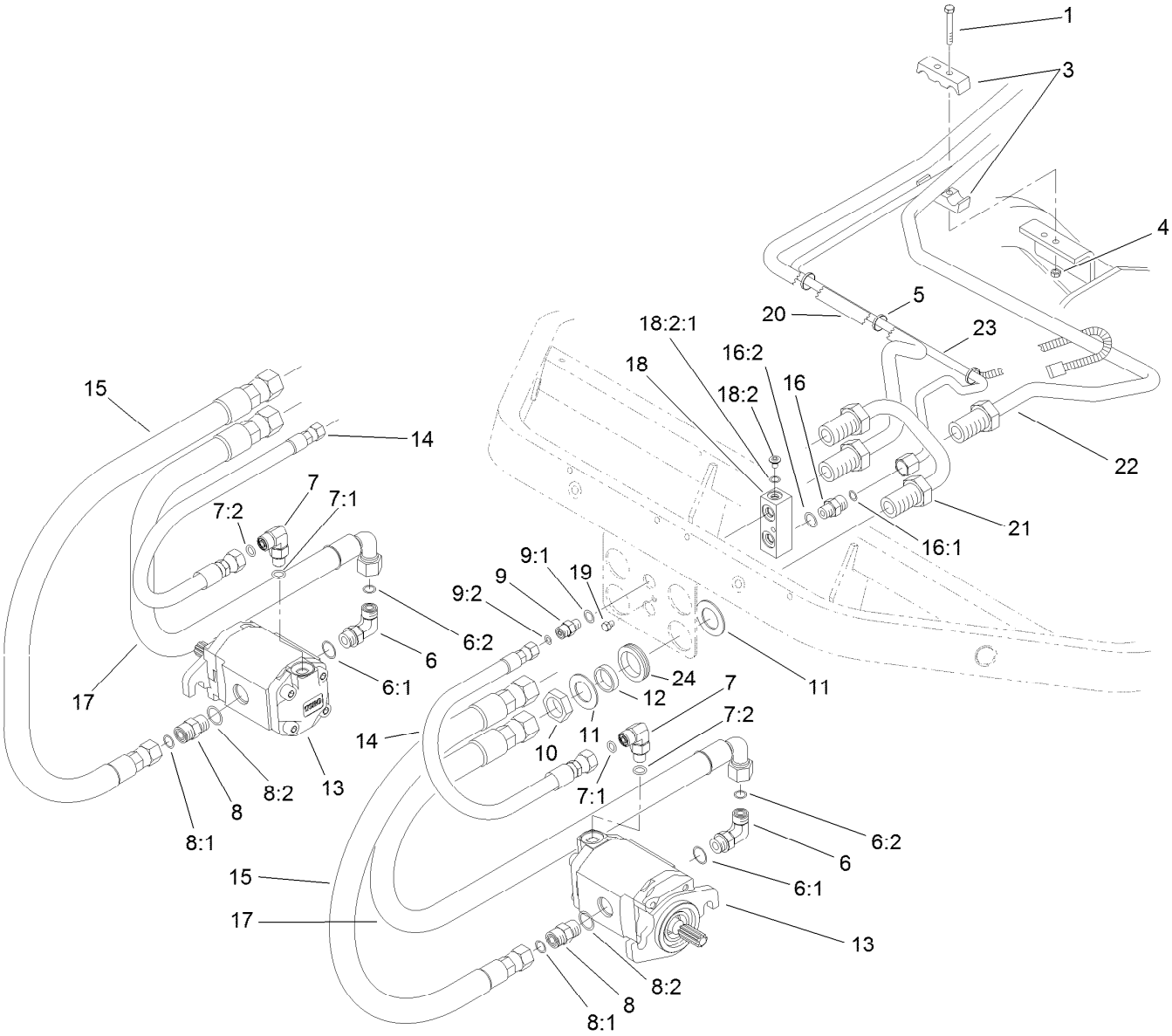

Front Bulkhead and Reel Motor Assembly

Ref.	Part Number	Qty.	Description
1	321-44	2	Screw-HHF
3	93-2509	2	Clamp-Tube
4	104-7201	2	Nut-HF, NI
5	3290-378	3	Tie-Cable
6	340-98	2	Fitting-Elbow, 90 DEG
6:1	237-79	1	O-Ring
6:2	237-30	1	O-Ring
7	340-132	2	Fitting-Elbow, 90 DEG
7:1	237-78	1	O-Ring
7:2	237-21	1	O-Ring
8	340-4	2	Fitting-Straight
8:1	237-30	1	O-Ring
8:2	237-79	1	O-Ring
9	340-92	2	Fitting-Straight
9:1	237-78	1	O-Ring
9:2	237-21	1	O-Ring
10	340-74	2	Nut-Lock, Bulkhead
11	69-9010	4	Washer
12	125-1984	2	Spacer

Ref.	Part Number	Qty.	Description
13	120-2072	2	HYD Motor ASM
14	106-9674	2	Hose-HYD
15	95-2908	2	Hose-HYD
16	340-2	1	Fitting-Straight
16:1	237-22	1	O-Ring
16:2	237-42	1	O-Ring
17	95-2909	2	Hose-HYD
18	93-2238	1	T-Block
18:2	353-991	1	Plug-Hex, Hollow
18:2:1	237-156	1	O-Ring
19	33113-008	1	Screw-HH
20	94-1318	1	Tube-HYD
21	94-1319	1	Tube-HYD
22	94-1320	1	Tube-HYD
22:1	237-65	1	O-Ring ●
23	94-1321	1	Tube-HYD
23:1	237-22	2	O-Ring ●
24	240-3	2	Grommet-Rubber

● Not illustrated

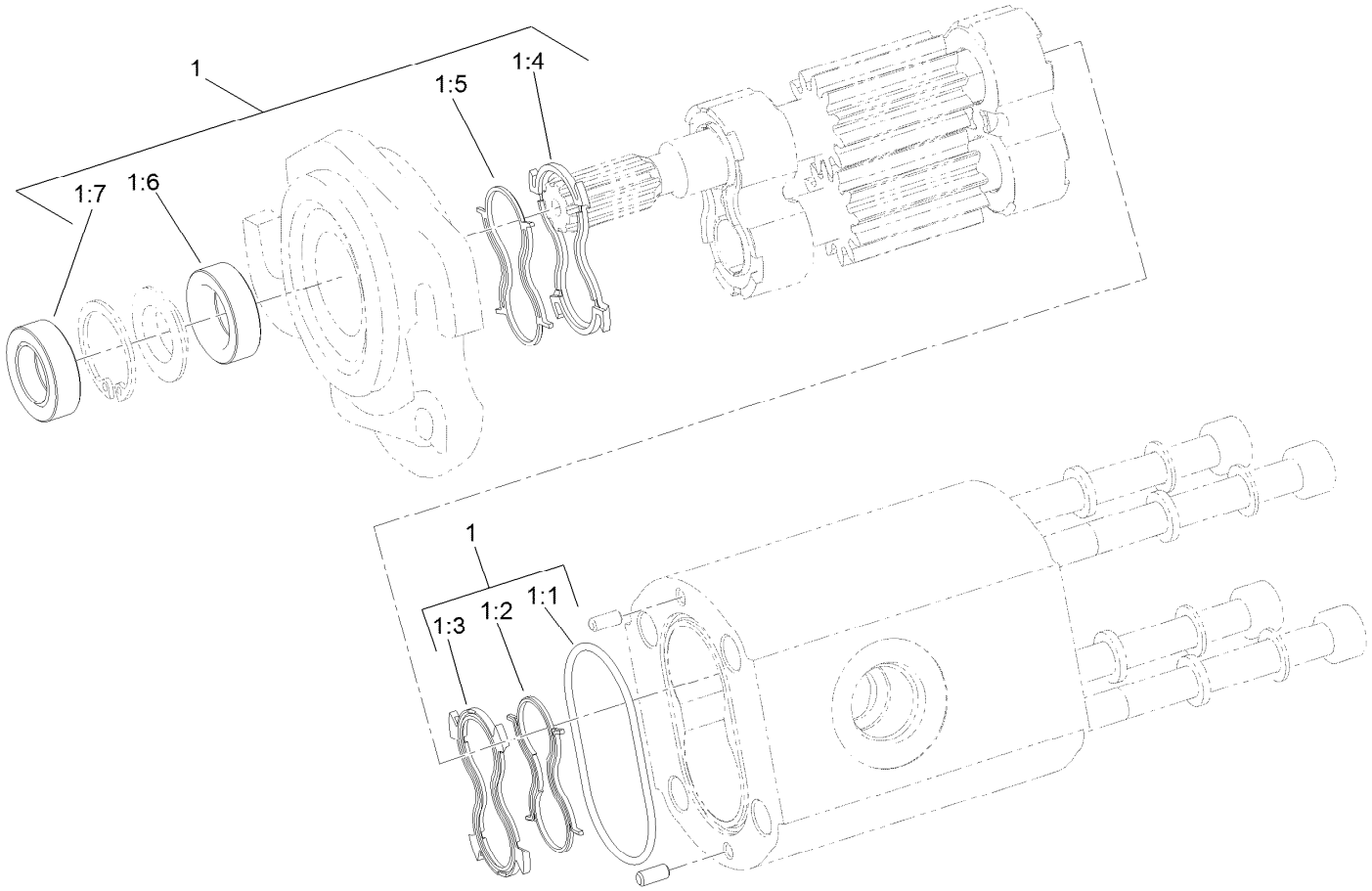

Hydraulic Reel Motor Assembly No. 120-2072

Ref.	*Part Number*	*Qty.*	*Description*
1	119-7113	1	Seal Kit
1:1		1	O-Ring Housing ●
1:2		1	Seal-Anti Extrusion ●
1:3		1	Seal-Plate, Balancing ●
1:4		1	Seal-Plate, Balancing ●
1:5		1	Seal-Anti Extrusion ●
1:6		1	Seal-Shaft (Inboard) ●
1:7		1	Seal-Shaft (Outboard) ●

● Not serviced separately

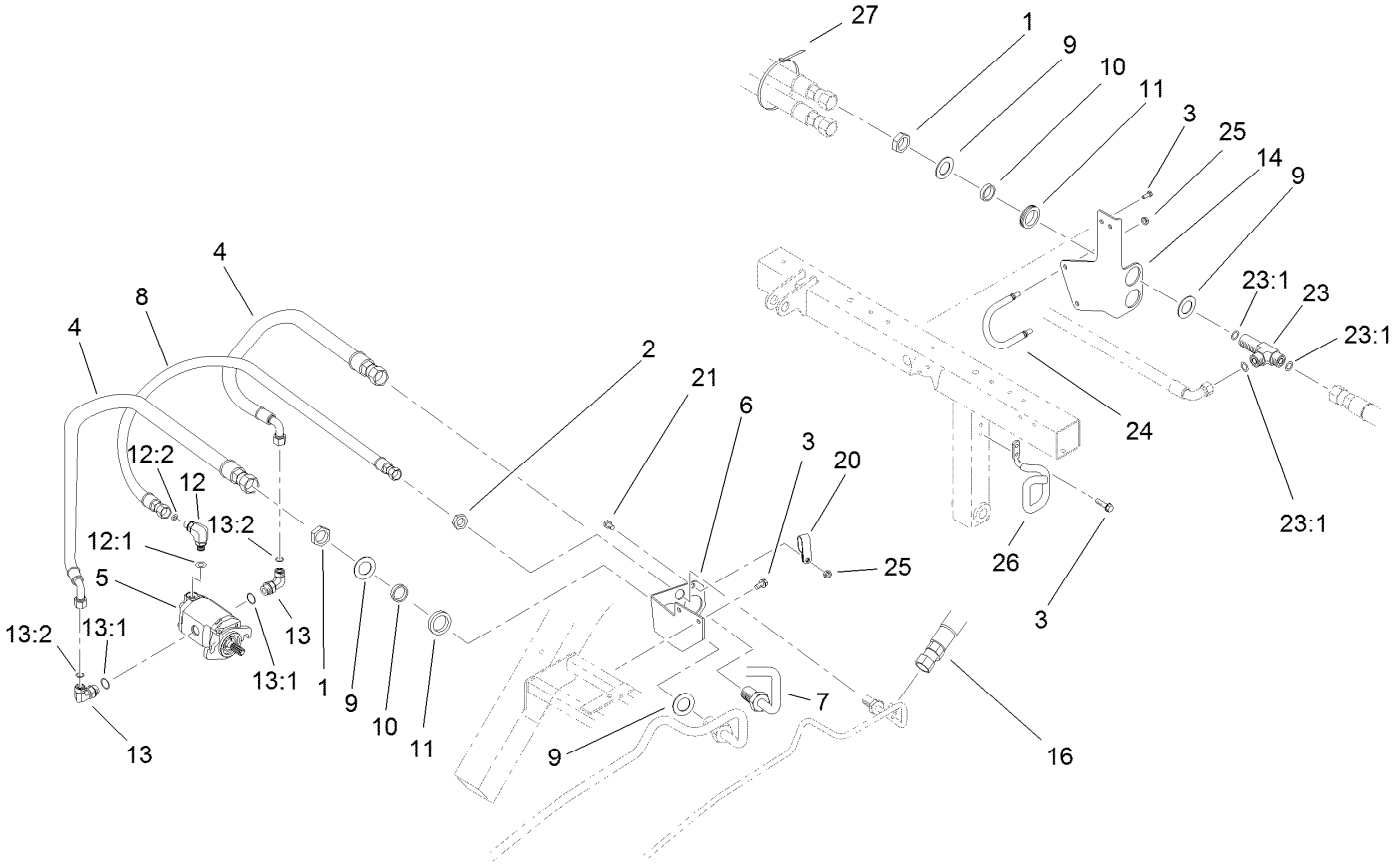

Rear Bulkhead and Reel Motor Assembly

Ref.	Part Number	Qty.	Description
1	340-74	4	Nut-Lock, Bulkhead
2	340-70	1	Nut-Lock
3	32104-32	6	Screw-HWH
4	95-2907	2	Hose ASM
5	120-2072	1	HYD Motor ASM
6	94-1316	1	Bracket-Bulkhead
7	94-1317	1	Tube-HYD
8	105-5405	1	Hose-HYD
9	69-9010	8	Washer
10	125-1984	4	Spacer
11	240-3	4	Grommet-Rubber
12	340-132	1	Fitting-Elbow, 90 DEG
12:1	237-78	1	O-Ring
12:2	237-21	1	O-Ring

Ref.	Part Number	Qty.	Description
13	340-98	2	Fitting-Elbow, 90 DEG
13:1	237-79	1	O-Ring
13:2	237-30	1	O-Ring
14	99-4222-03	1	Bracket-Hose
16	110-4008	1	HYD Hose ASM
20	2412-137	1	Clamp-R, Double
21	3234-47	1	Screw-HHF
23	94-5350	2	Fitting-Tee
23:1	237-65	3	O-Ring
24	99-4221	1	Retainer-Hose
25	104-8300	3	Nut-HF, NI
26	94-5352	1	Retainer-Hose
27	3290-378	1	Tie-Cable

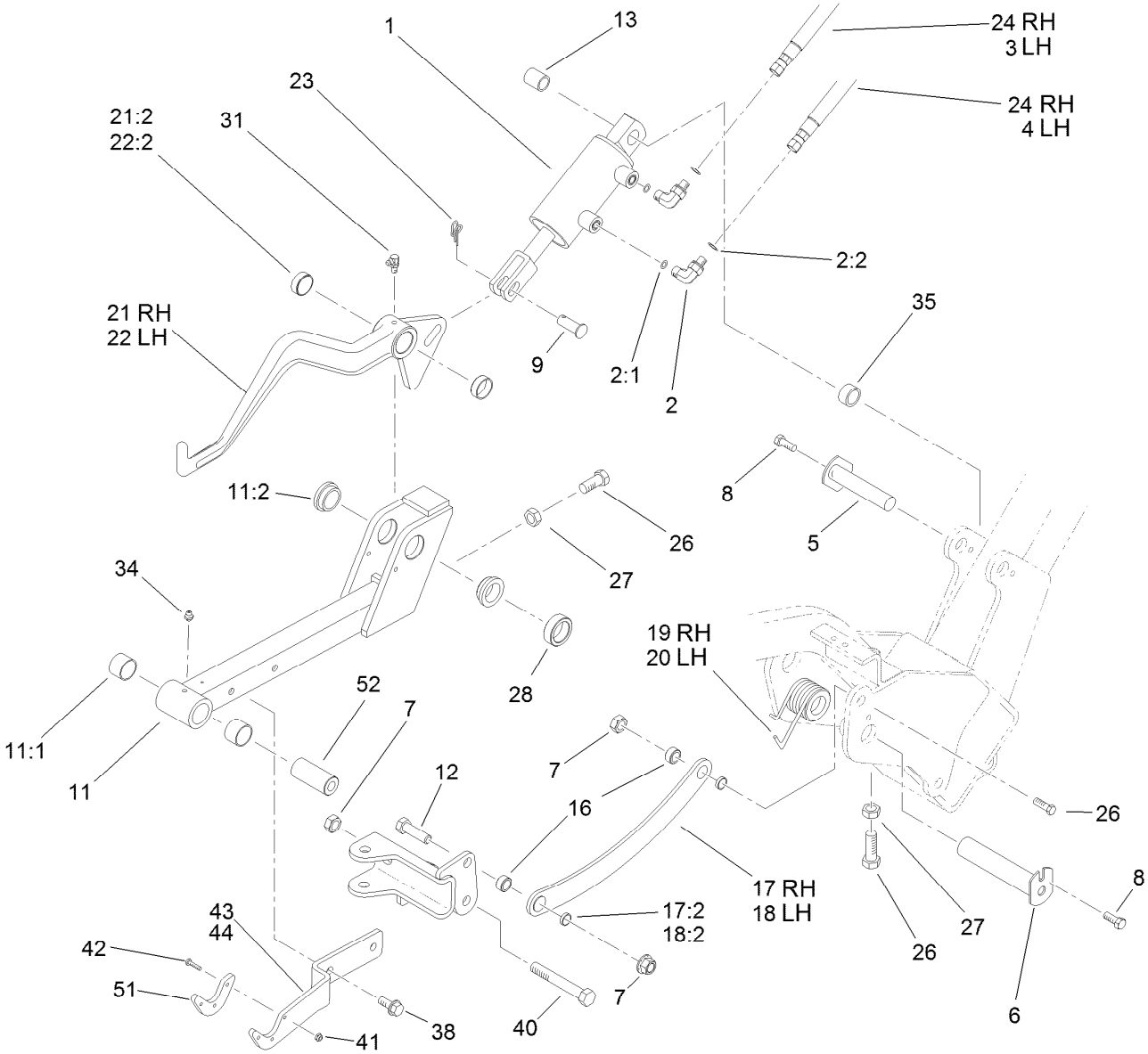

Left Hand and Right Hand Lift Arm Assembly

Ref.	Part Number	Qty.	Description
1	105-3821	2	HYD Cylinder ASM
2	340-132	4	Fitting-Elbow, 90 DEG
2:1	237-78	1	O-Ring
2:2	237-21	1	O-Ring
3	108-6505	1	Hose-HYD
4	112-9193	1	Hose-HYD
5	120-3199	2	Pin-Pivot
6	94-8198	2	Pin
7	99-5107	6	Nut-Lock
8	32104-32	4	Screw-HWH
9	283-8	2	Pin-Clevis
11	99-4115	2	Front Lift Frame ASM
11:1	98-4166	2	Bushing
11:2	94-9610	2	Bushing-Flange
12	325-6	4	Screw-HH
13	105-3838	2	Spacer
16	99-4201	4	Tube-Spacer
17	99-4258	1	RH Link Bracket ASM
17:2	99-4243	2	Bushing-Flange
18	99-4260	1	LH Link Bracket ASM
18:2	99-4243	2	Bushing-Flange

Ref.	Part Number	Qty.	Description
19	105-3809	1	Spring-Torsion, RH
20	105-3818	1	Spring-Torsion, LH
21	99-4213	1	RH Lift Arm ASM
21:2	92-8995	2	Bushing
22	99-4212	1	LH Lift Arm ASM
22:2	92-8995	2	Bushing
23	112-1491	2	Pin-Cotter
24	93-2254	2	HYD Hose ASM
26	325-7	4	Screw-HH
27	3218-5	3	Nut-Jam
28	93-2384	2	Spacer-Carrier
31	302-60	2	Fitting-Grease
34	302-5	2	Fitting-Grease
35	74-3730	2	Spacer-Spindle, Rear
38	32144-69	4	Screw-HWHTF
40	325-14	2	Screw-HH
41	3296-54	6	Nut-Lock
42	3250-17	6	Screw-PPH
43	99-4111-01	1	Plate-Transport, 1 And 3
44	99-4112-01	1	Plate-Transport, #2

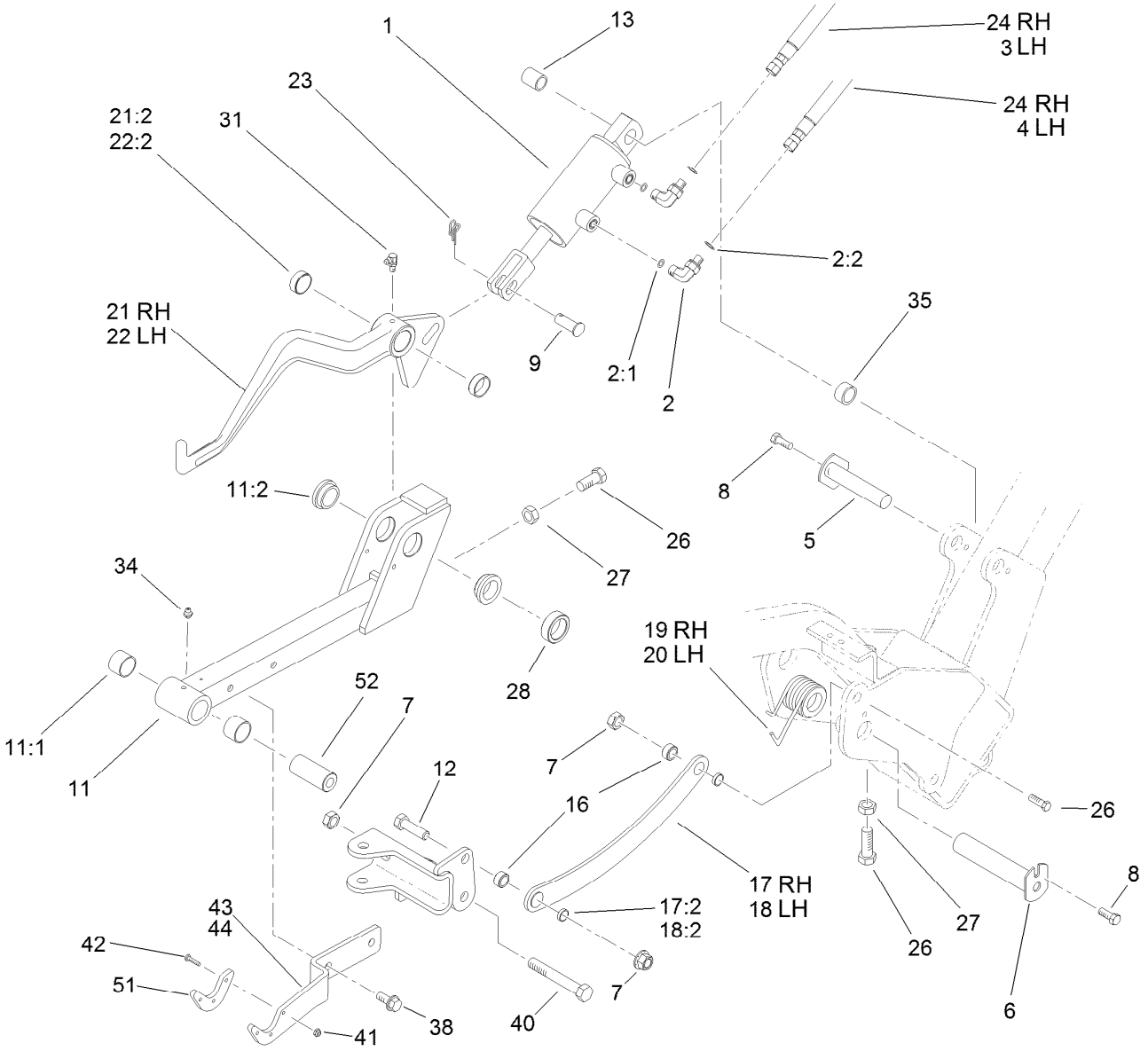

Left Hand and Right Hand Lift Arm Assembly (continued)

Ref.	*Part Number*	*Qty.*	*Description*
51	99-4225	2	Pad-Wear
52	99-4072	2	Spacer

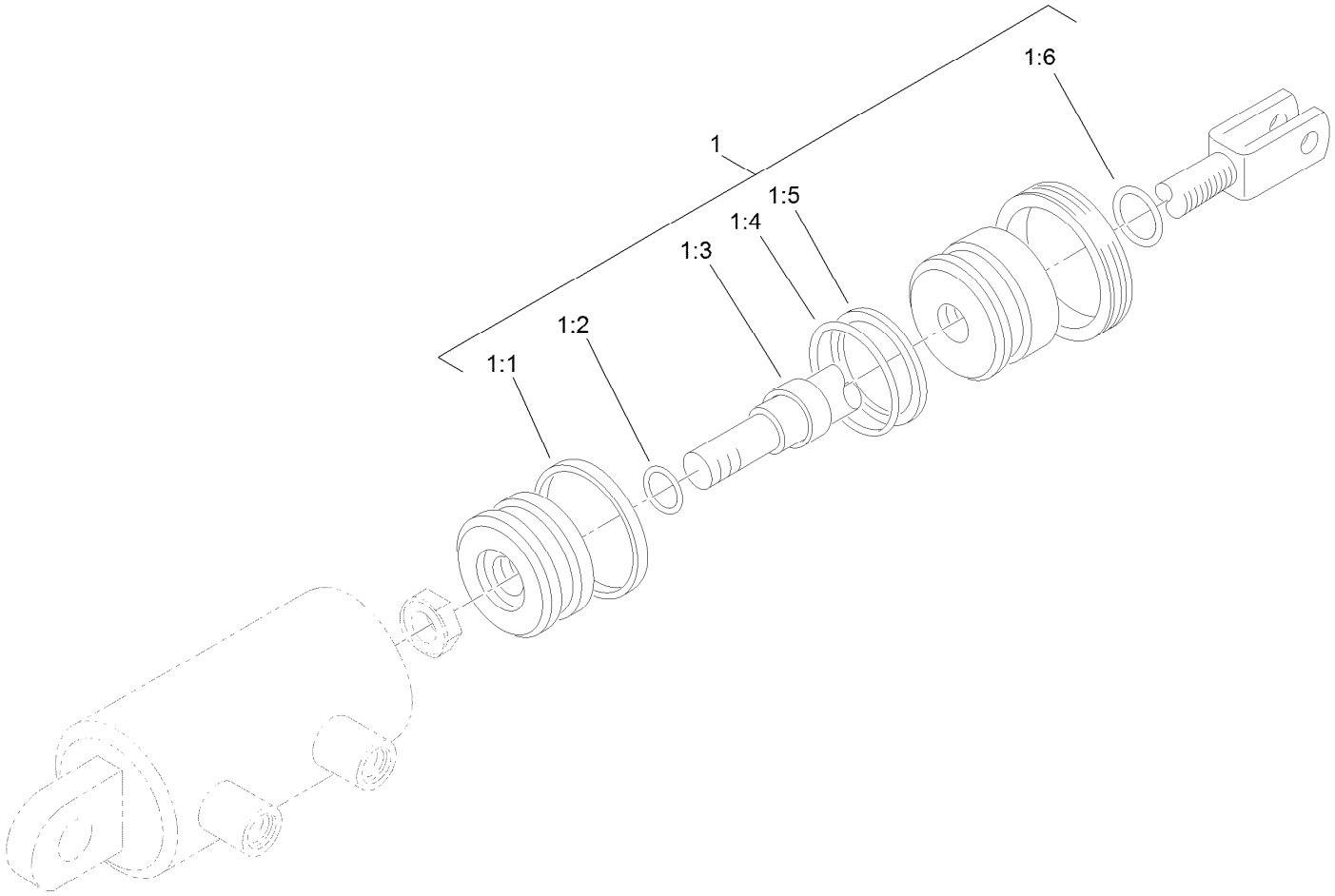

Hydraulic Cylinder Assembly No. 105-3821

Ref.	*Part Number*	*Qty.*	*Description*
1	105-3836	1	Seal Kit
1:1		1	T-Seal ●
1:2		1	O-Ring ●
1:3		1	Seal-Rod ●
1:4		1	O-Ring ●
1:5		1	Backup ●
1:6		1	Seal-Dust ●

● Not serviced separately

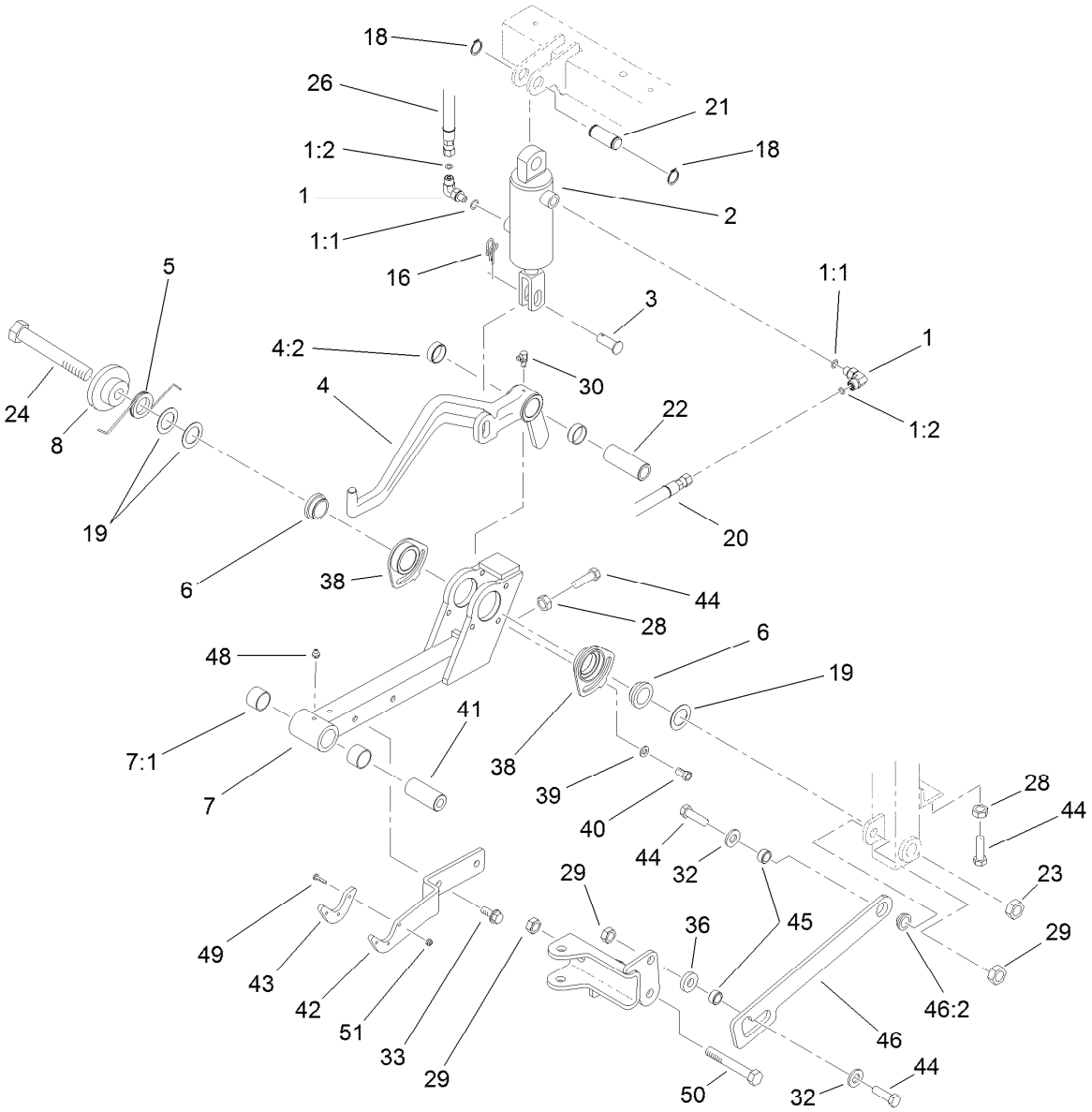

Center Lift Arm Assembly

Ref.	Part Number	Qty.	Description
1	340-132	2	Fitting-Elbow, 90 DEG
1:1	237-78	1	O-Ring
1:2	237-21	1	O-Ring
2	105-3820	1	HYD Cylinder ASM
3	283-8	1	Pin-Clevis
4	99-4126	1	Center Lift Arm ASM
4:2	92-8995	2	Bushing
5	105-9781	1	Spring-Torsion
6	98-2197	2	Bushing-Flange
7	99-4116	1	Rear Lift Frame ASM
7:1	98-4166	2	Bushing
8	105-9779	1	Guide-Spring
16	112-1491	1	Pin-Cotter
18	32120-72	2	Ring-Snap
19	63-2290	3	Washer-Thrust
20	112-9185	1	Hose ASM
21	94-3452	1	Pin
22	94-8199	1	Tube-Pivot
23	3296-53	1	Nut-Lock, NI
24	327-25	1	Screw-HH
26	106-7981	1	Hose-HYD

Ref.	Part Number	Qty.	Description
28	3218-5	2	Nut-Jam
29	99-5107	3	Nut-Lock
30	302-60	1	Fitting-Grease
32	3256-26	2	Washer-Flat
33	32144-69	2	Screw-HWHTF
36	99-4248	1	Spacer
38	125-5222	2	Bushing-Eccentric, Machined
39	3256-74	2	Washer-Flat
40	33114-016	2	Screw-HH
41	99-4072	1	Spacer
42	99-4111-01	1	Plate-Transport, 1 And 3
43	99-4225	1	Pad-Wear
44	325-7	4	Screw-HH
45	99-4201	2	Tube-Spacer
46	99-4246	1	Link Bracket ASM
46:2	99-4243	1	Bushing-Flange
48	302-5	1	Fitting-Grease
49	3250-17	3	Screw-PPH
50	325-14	1	Screw-HH
51	3296-54	3	Nut-Lock

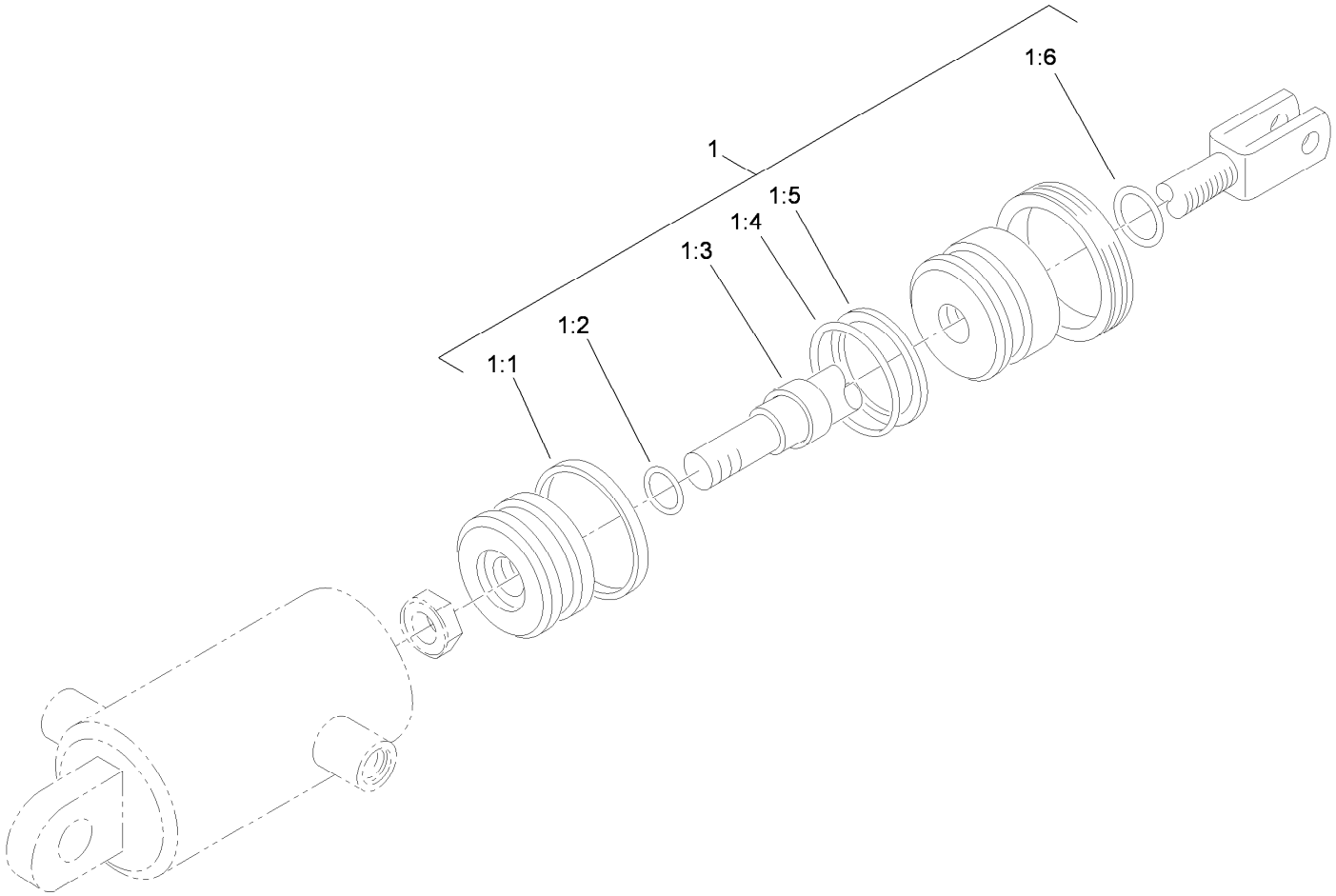

Hydraulic Cylinder Assembly No. 105-3820

Ref.	*Part Number*	*Qty.*	*Description*
1	105-3836	1	Seal Kit
1:1		1	T-Seal ●
1:2		1	O-Ring ●
1:3		1	Seal-Rod ●
1:4		1	O-Ring ●
1:5		1	Backup ●
1:6		1	Seal-Dust ●

● Not serviced separately

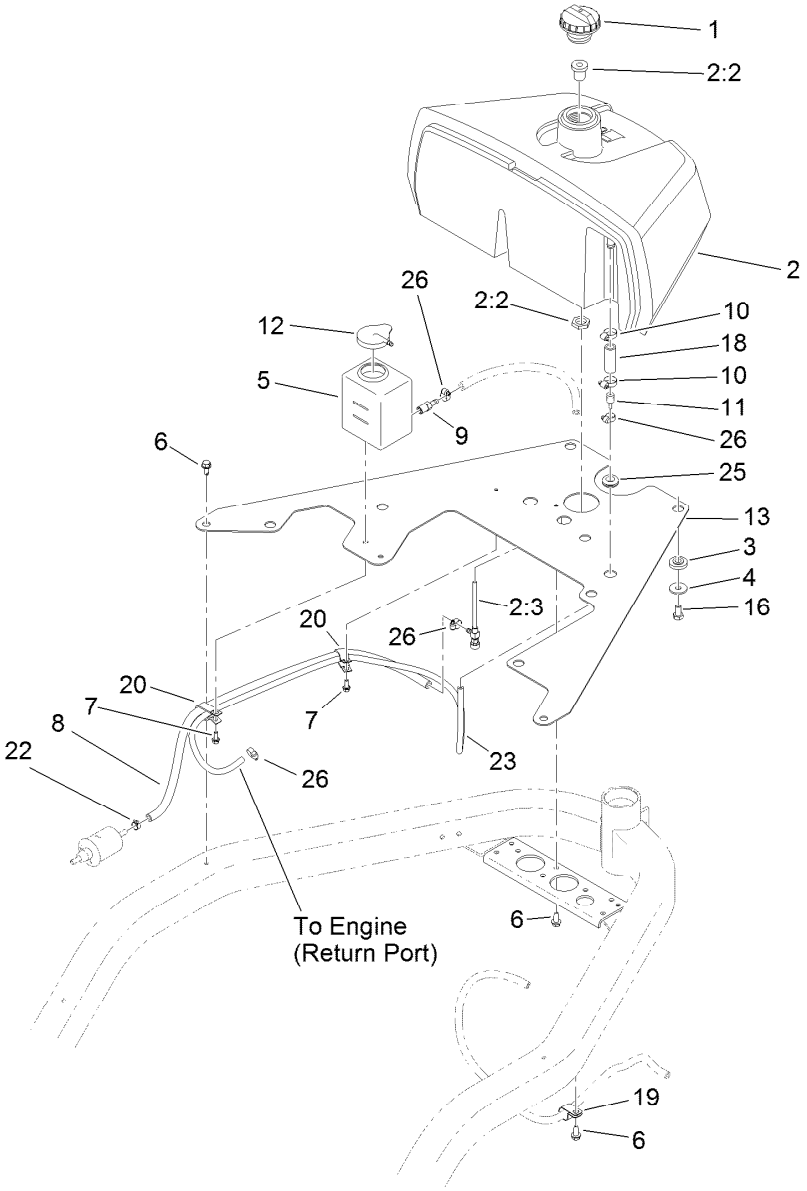

Fuel System Assembly

Ref.	Part Number	Qty.	Description
1	115-5305	1	Cap-Fuel
2	114-4680	1	Tank ASM
2:2	114-4677	1	Bulkhead ASM
2:3	114-4679	1	Fitting-Shut Off, Fuel
3	240-11	3	Bushing-Flange
4	93-4637	3	Washer-Flat
5	120-5260	1	Tank-Overflow
6	32104-32	4	Screw-HWH
7	3234-33	3	Screw-HHF
8	110-6186	1	Hose-Fuel
9	353-783	1	Fitting-STR
10	2412-36	2	Clamp-Hose

Ref.	Part Number	Qty.	Description
11	112-0212	1	Fitting-Fuel
12	1-643164	1	Cap-Tank, Overflow
13	119-3531-01	1	Plate
16	33115-020	3	Screw-HH
18	106-1128	1	Hose-Fuel
19	2412-41	1	Clamp-R
20	92-5753	2	Clamp-Hose
22	92-2379	1	Clamp-Hose
23	117-6395	1	Hose-Vent, Tank
25	237-124	1	Grommet
26	2412-108	4	Clamp-Worm

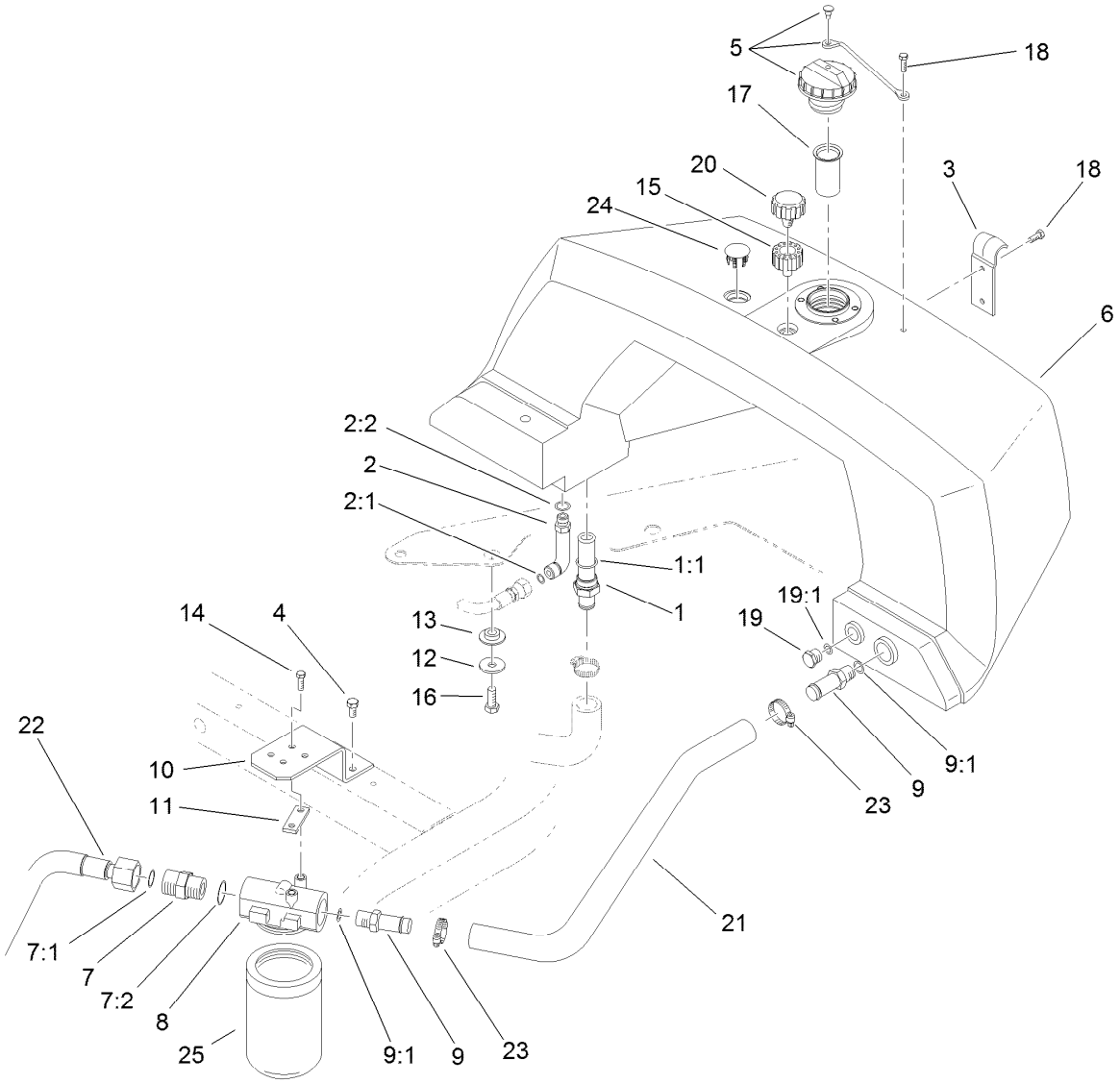

Hydraulic Tank and Filter Assembly

Ref.	Part Number	Qty.	Description
1	112-0211	1	Strainer Fitting ASM
1:1	237-146	1	O-Ring
2	69-4320	1	Fitting-HYD, 90 DEG
2:1	237-22	1	O-Ring
2:2	237-42	1	O-Ring
3	93-2438	1	Clamp-Tank, Fuel
4	32104-32	2	Screw-HWH
5	93-7160	1	Cap-Oil, HYD
6	117-9531	1	Tank-Hydraulic
7	340-9	1	Fitting-STR
7:1	237-58	1	O-Ring
7:2	237-81	1	O-Ring
8	92-5821	1	Head-Filter
9	354-73	2	Fitting
9:1	237-81	1	O-Ring
10	105-9793-03	1	Mount-Filter, Oil

Ref.	Part Number	Qty.	Description
11	105-4309	1	Plate-Filter
12	93-4637	4	Washer-Flat
13	240-11	4	Bushing-Flange
14	321-5	2	Screw-HH
15	92-8020	1	Adapter-Breather
16	33115-020	4	Screw-HH
17	93-2275	1	Screen-Filler
18	33103-016	3	Screw-HHF
19	353-988	1	Plug-Hex
19:1	237-79	1	O-Ring
20	68-6150	1	Breather
21	94-9607	1	Hose-Return
22	94-4518	1	Tube ASM
23	2412-129	2	Clamp-Hose
24	93-2437	1	Plug-Serrated
25	107-9531	1	Filter-Oil, HYD

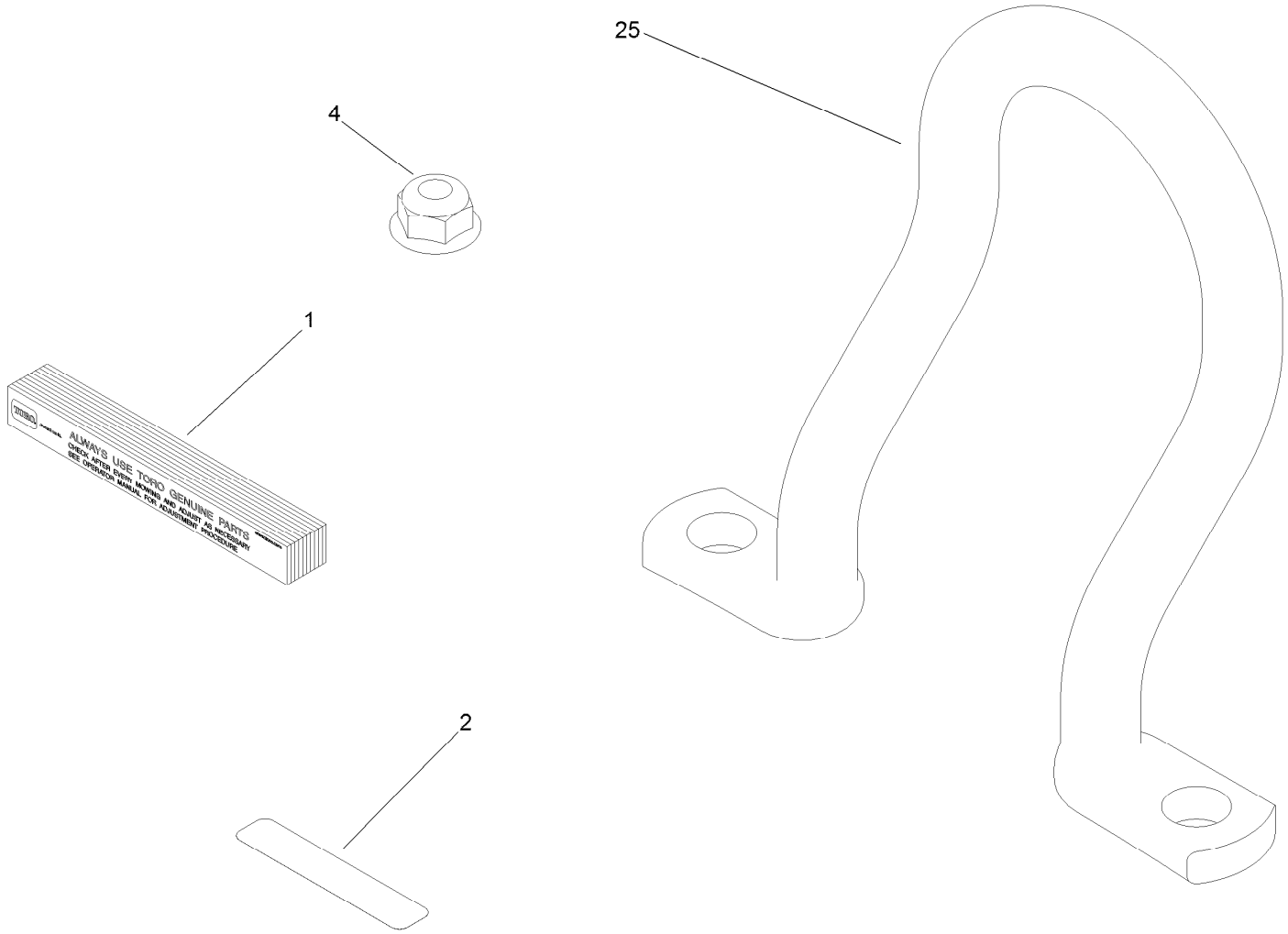

Miscellaneous Part Assembly

Ref.	*Part Number*	*Qty.*	*Description*
1	125-5610	1	Paper-Reel, Toro (10 Pack)
2	125-5611	1	Shim-Reel, Toro (0.002 Inch)
4	104-8300	4	Nut-HF, NI
25	110-2397	3	Hook-Lift, Offset (1.25 Inch, GR3250)

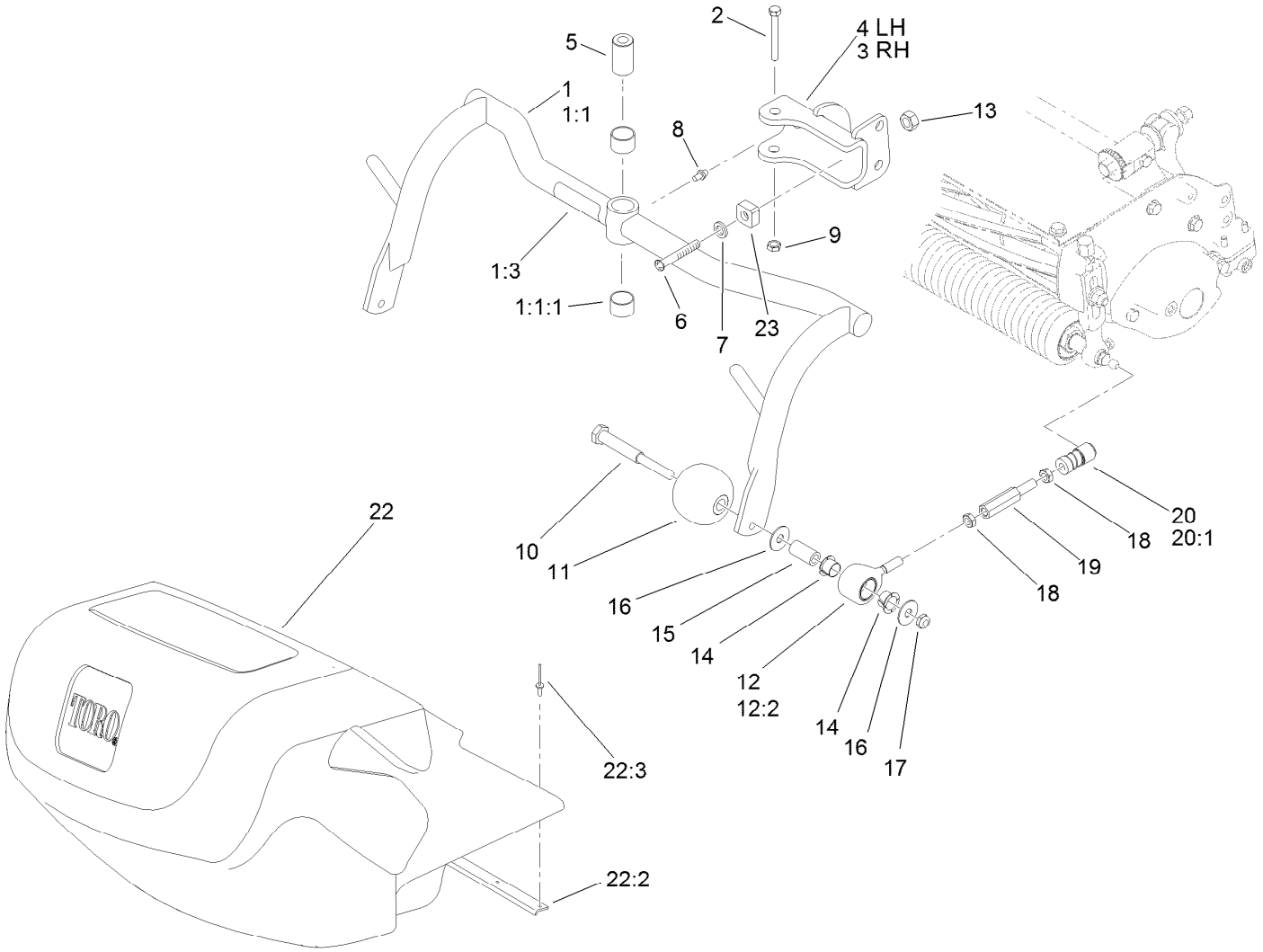

Pull Frame Assembly

Ref.	Part Number	Qty.	Description
1	136-8577	3	Pull Frame ASM
1:1		1	Pull Frame And Bushing ASM ●
1:1:1	98-4166	2	Bushing
1:3	104-7729	1	Decal-Danger, CE
2	325-13	3	Screw-HH
3	99-4183-01	2	RH Clevis ASM
4	99-4182-01	1	LH Clevis ASM
5	99-4109	3	Spacer
6	78-8710	3	Screw
7	3256-77	3	Washer-Flat
8	302-5	3	Fitting-Grease
9	99-5107	3	Nut-Lock
10	108-6543	6	Shaft-Roller
11	99-4210	6	Roller-Anti Scalp

Ref.	Part Number	Qty.	Description
12	108-6542	6	Pull Link ASM
12:2	95-0532	2	Rubber Bushing ASM
13	3296-12	3	Nut-Lock, NI
14	104-7738	12	Bushing-Flange
15	108-6544	6	Spacer
16	119-4150	12	Washer-Flat
17	3296-59	6	Nut-Lock, NI
18	3220-3	12	Nut-HJ
19	88-6870	6	Extension-Arm, Pull
20	99-1460	6	Ball Joint Receiver ASM
20:1	99-1461	1	Sleeve-Joint, Ball
22	106-4689	3	Grass Basket ASM
22:2	104-2607	1	Strip-Basket
22:3	3290-382	8	Rivet-Pop
23	94-1392	3	Pad-Rubber

● Not serviced separately

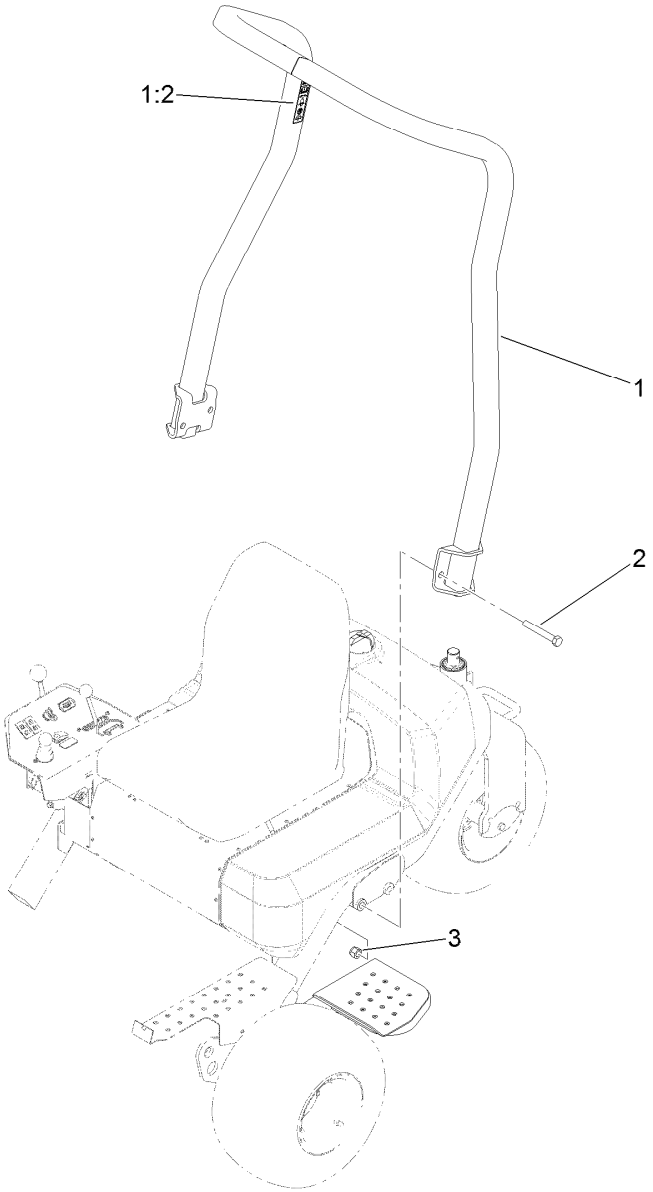

Roll-Over Protection System Assembly

Ref.	Part Number	Qty.	Description
1	125-5158	1	ROPS ASM
1:2	115-8226	1	Decal-ROPS
2	327-23	4	Screw-HH
3	3296-53	4	Nut-Lock, NI

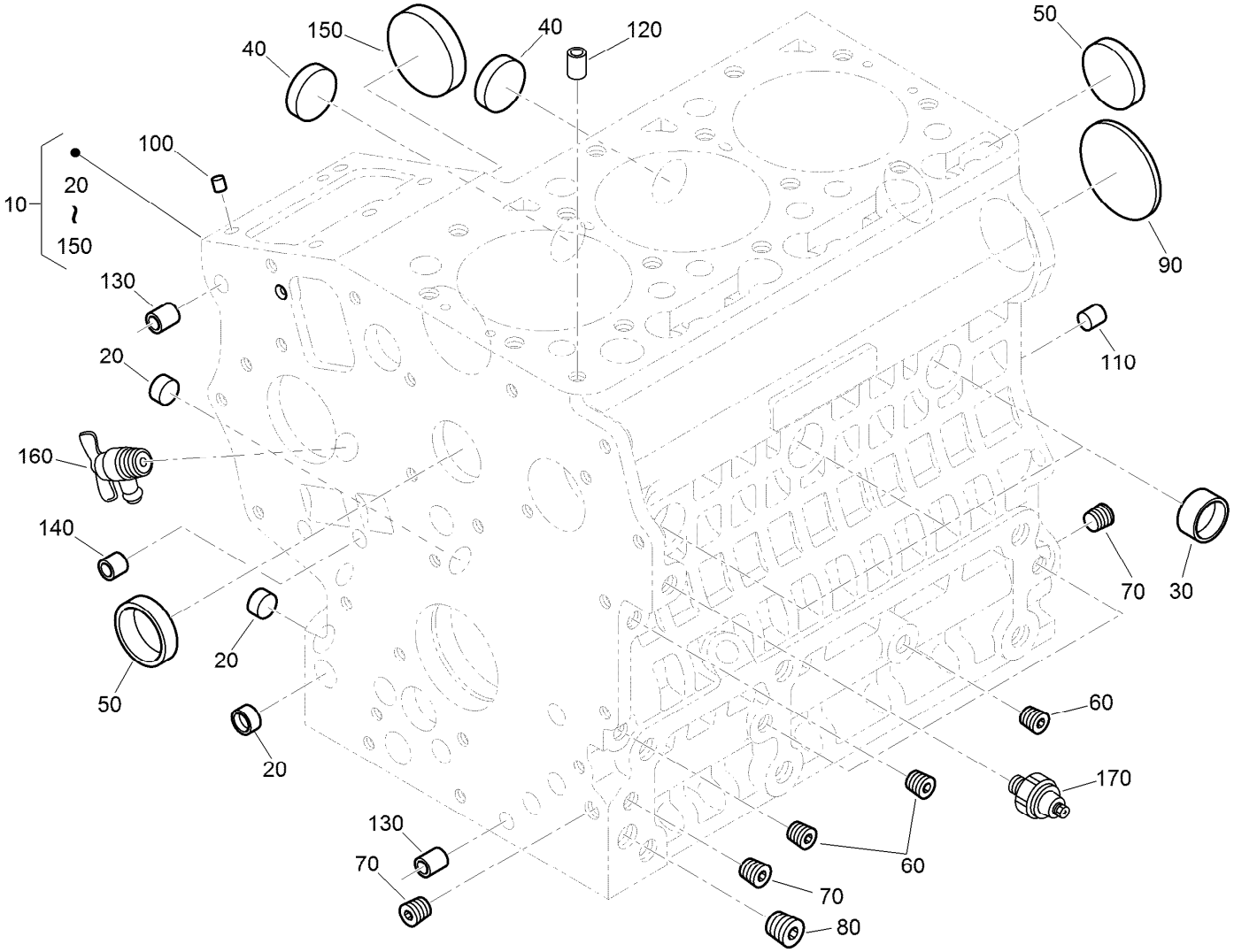

Crankcase Assembly

Ref.	Part Number	Qty.	Description
10	130-1385	1	Crankcase ASM
20	100-2019	3	Cap-Sealing
30	100-2020	3	Cap-Sealing
40	110-3702	2	Cap-Sealing
50	98-9398	2	Cap-Sealing
60	98-9687	5	Plug
70	98-7487	3	Plug
80	98-7488	1	Plug
90	100-1851	1	Plug-Expansion

Ref.	Part Number	Qty.	Description
100	98-9375	2	Pin-Straight
110	98-9377	2	Pin-Straight
120	98-7506	1	Pin-Pipe
130	100-2051	2	Pin-Pipe
140	100-2051	2	Pin-Pipe
150	100-1991	1	Cover-Fuel, Camshaft
160	120-3121	1	Draincock ASM
170	98-7764	1	Switch-Oil

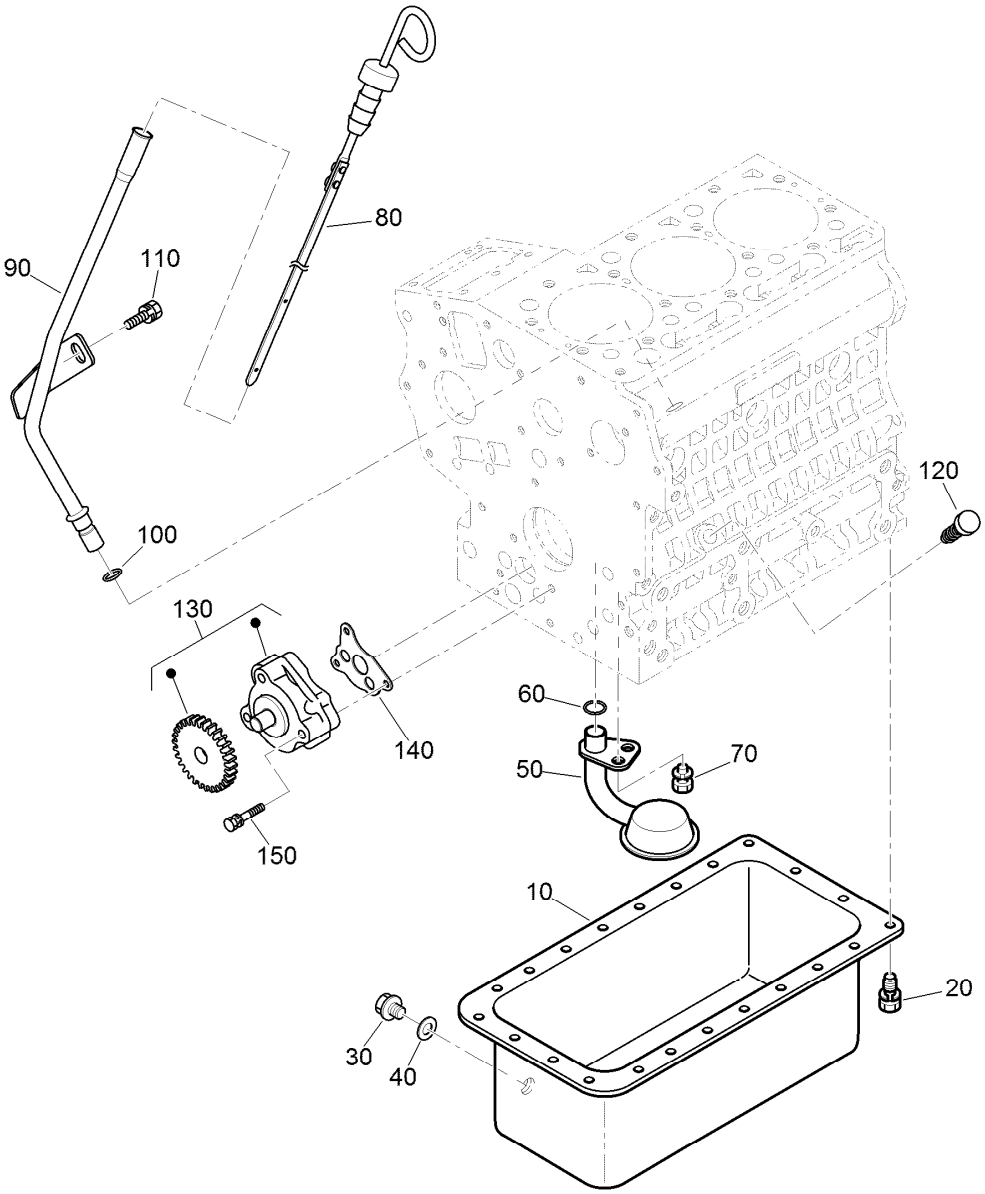

Oil Pan, Oil Pump and Dipstick Assembly

Ref.	*Part Number*	*Qty.*	*Description*
10	120-3122	1	Oil Pan ASM
20	98-9350	22	Bolt
30	114-8151	1	Plug-Drain
40	98-7524	1	Gasket
50	100-2001	1	Strainer-Pickup, Oil
60	105-3776	1	O-Ring
70	100-9195	1	Bolt
80	120-3124	1	Gauge-Oil
90	120-3125	1	Guide-Gauge, Oil
100	98-9722	1	O-Ring
110	115-8504	1	Bolt-Flange
120	110-3720	1	Plug-Gauge, Oil
130	121-2407	1	Oil Pump ASM
140	121-2408	1	Gasket-Pump, Oil
150	100-1923	3	Bolt

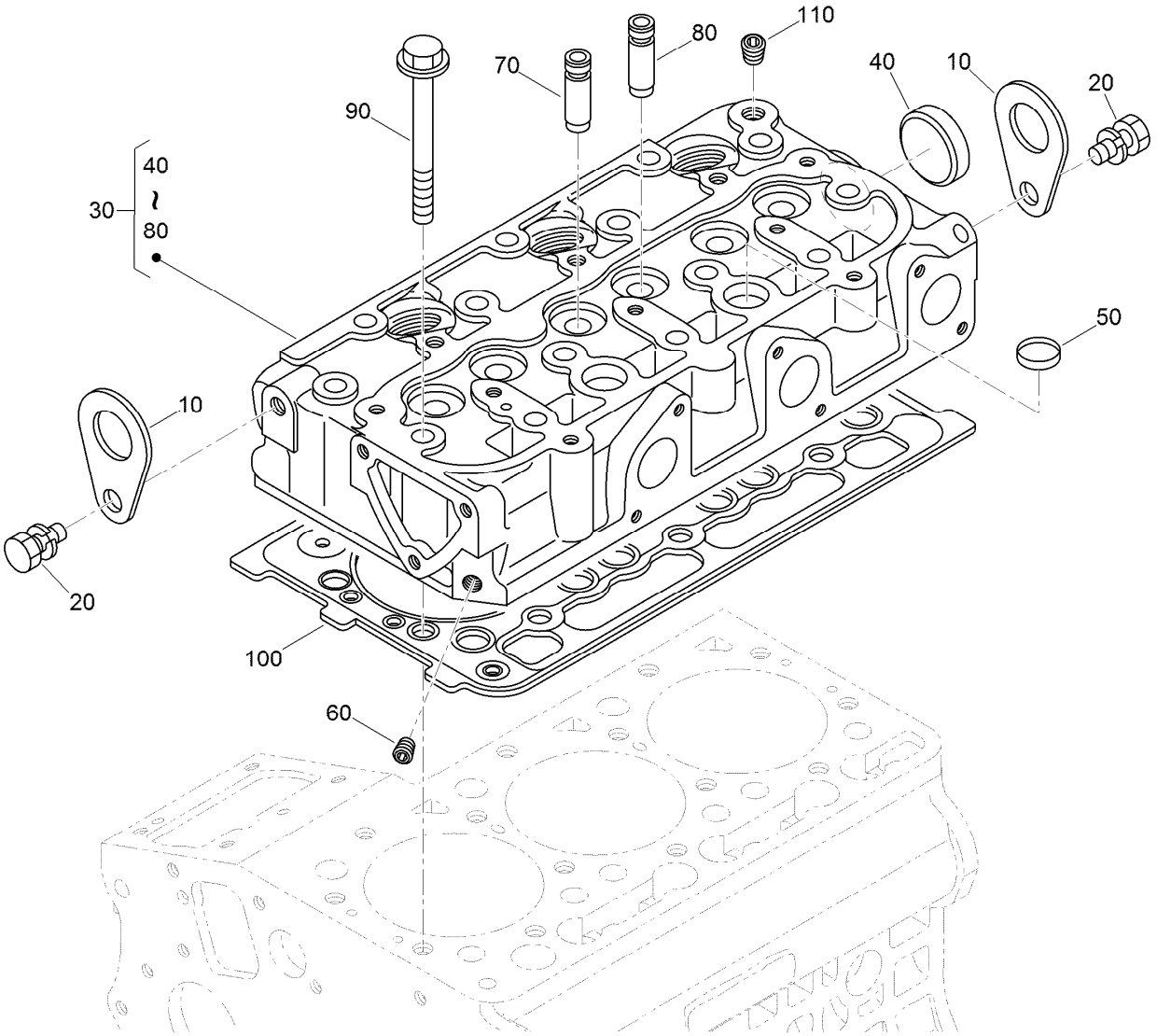

Cylinder Head Assembly

Ref.	*Part Number*	*Qty.*	*Description*
10	98-7531	2	Hook-Engine
20	98-7526	2	Bolt
30	130-1504	1	Cylinder Head ASM
40	105-3705	1	Cap-Sealing
50	98-9389	2	Cap-Sealing
60	98-9687	1	Plug
70	100-1882	3	Guide-Valve, Inlet
80	100-1883	3	Guide-Valve, Exhaust
90	100-1820	14	Bolt-Head, Cylinder
100	112-2520	1	Gasket-Head, Cylinder
110	98-9444	1	Plug

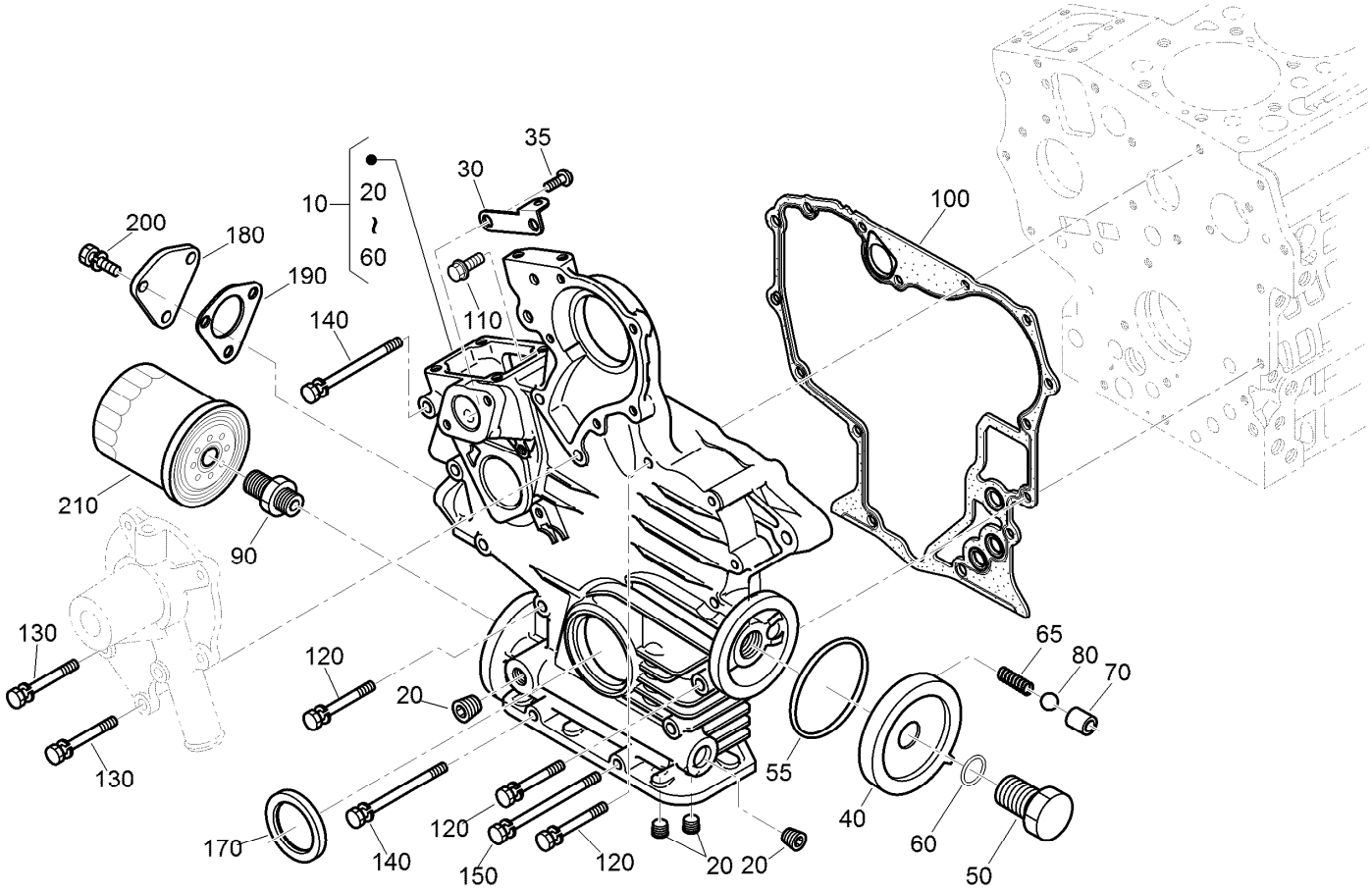

Gear Case and Oil Filter Cartridge Assembly

Ref.	Part Number	Qty.	Description
10	121-2401	1	Gearcase ASM
20	98-7488	4	Plug
30	110-3708	1	Stay-Spring, Start
35	100-2040	2	Screw
40	121-2402	1	Cover
50	121-2403	1	Bolt
55	98-9729	1	O-Ring
60	105-3777	1	O-Ring
65	100-2004	1	Spring
70	100-1894	1	Seat-Valve
80	100-1792	1	Ball
90	98-9388	1	Joint-Pipe

Ref.	Part Number	Qty.	Description
100	121-2404	1	Gasket-Gearcase
110	127-0403	1	Bolt-Flange
120	125-9063	8	Bolt-Sems
130	100-1922	2	Bolt
140	98-9357	3	Bolt
150	110-3710	1	Bolt
170	120-7852	1	Seal-Oil
180	121-2405	1	Cover
190	121-2406	1	Packing-Flange
200	98-7605	3	Bolt
210	115-8189	1	Filter-Oil, Engine

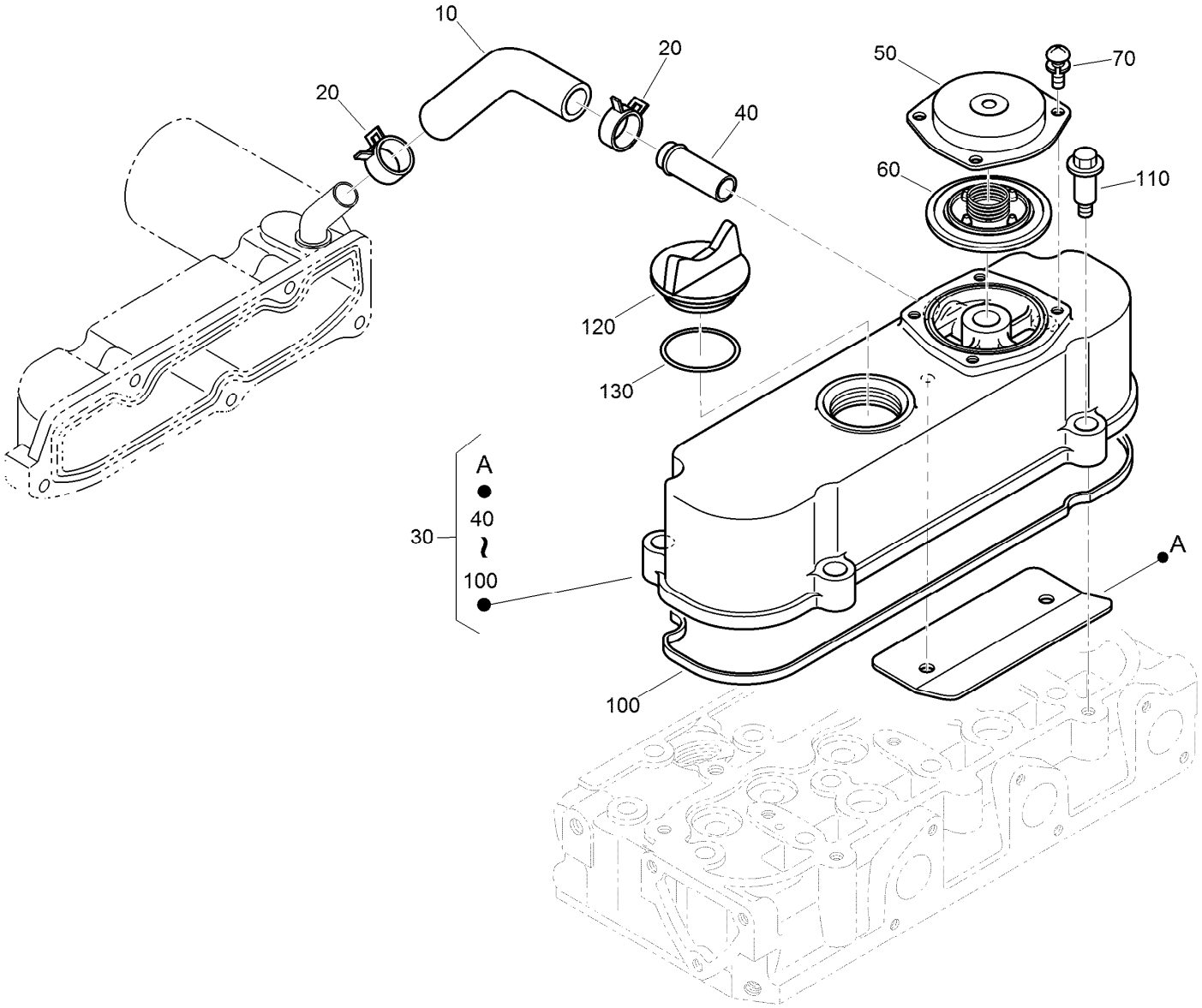

Cylinder Head Cover Assembly

Ref.	Part Number	Qty.	Description
10	120-3139	1	Tube-Breather
20	110-3712	2	Clamp-Hose
30	112-8332	1	Cylinder Head Cover ASM
40	98-9580	1	Pipe-Return, Water
50	110-3714	1	Cover-Breather
60	110-3715	1	Valve-Breather
70	98-9364	4	Screw (With Washer)
100	112-2521	1	Gasket-Cover, Head
110	108-7063	4	Bolt
120	107-9075	1	Plug-Filler, Oil
130	99-3446	1	O-Ring

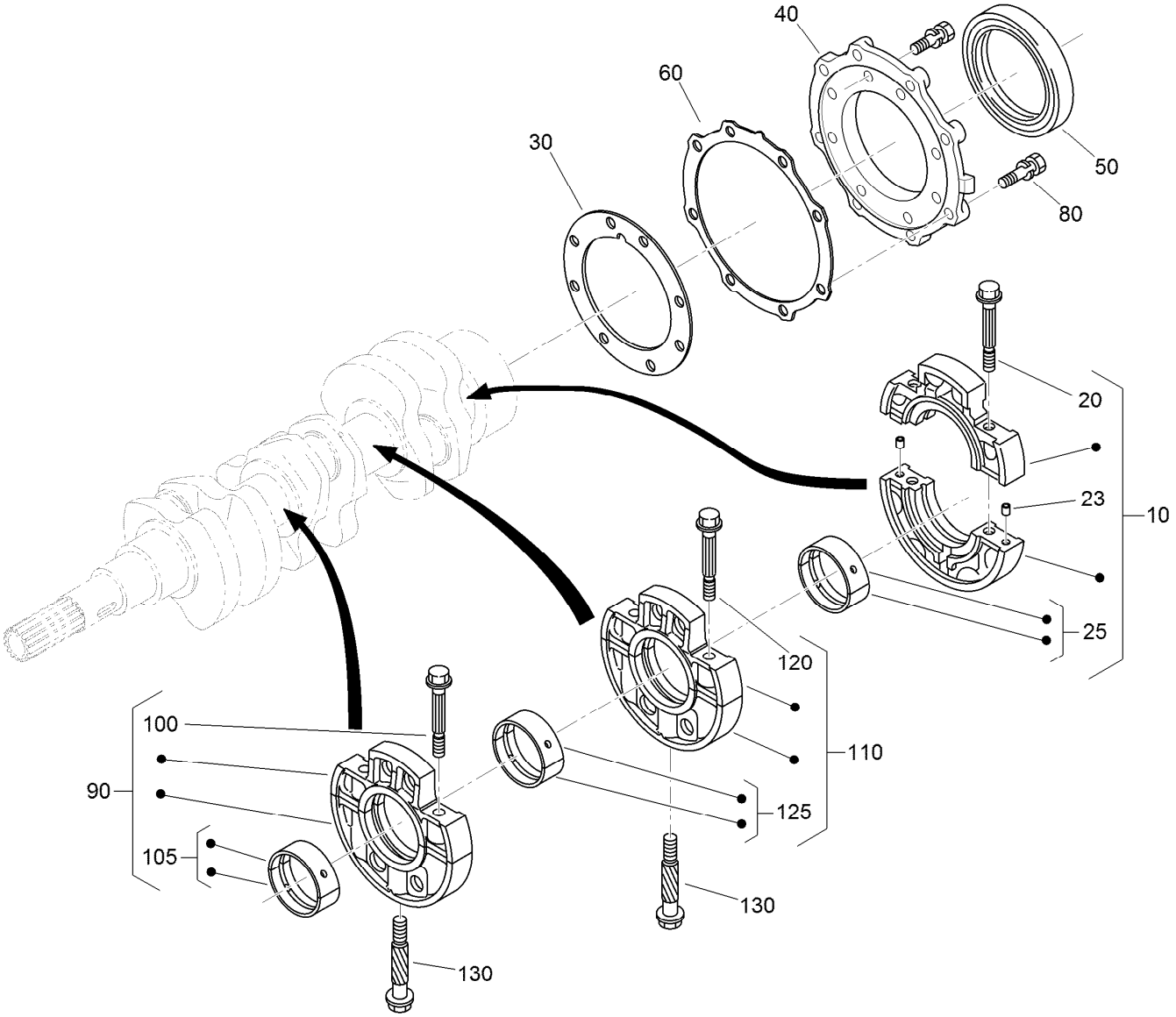

Main Bearing Case Assembly

Ref.	Part Number	Qty.	Description
10	125-9064	1	Wheel Bearing Case ASM
20	125-9065	2	Bolt-Flange
23	125-9082	2	Pin-Straight
25	125-9066	1	Crankshaft Metal ASM (STD)
25	125-9067	1	Crankshaft Metal ASM (-0.20Mm)
25	125-9068	1	Crankshaft Metal ASM (-0.40Mm)
30	100-1873	1	Gasket-Case, Bearing
40	112-8334	1	Cover-Case, Bearing
50	110-3724	1	Seal-Oil
60	100-1876	1	Gasket-Cover, Case
80	100-1750	16	Bolt
90	130-1417	1	Main Bearing Case ASM
100	110-3723	2	Bolt-Case, Bearing

Ref.	Part Number	Qty.	Description
105	110-3741	1	Crankshaft Metal ASM (STD)
105	125-9083	1	Crankshaft Metal ASM (-0.20Mm)
105	110-3743	1	Crankshaft Metal ASM (-0.40Mm)
110	130-1418	1	Main Bearing Case ASM
120	110-3723	2	Bolt-Case, Bearing
125	110-3741	1	Crankshaft Metal ASM (STD)
125	125-9083	1	Crankshaft Metal ASM (-0.20Mm)
125	110-3743	1	Crankshaft Metal ASM (-0.40Mm)
130	100-1874	2	Bolt-Case, Bearing

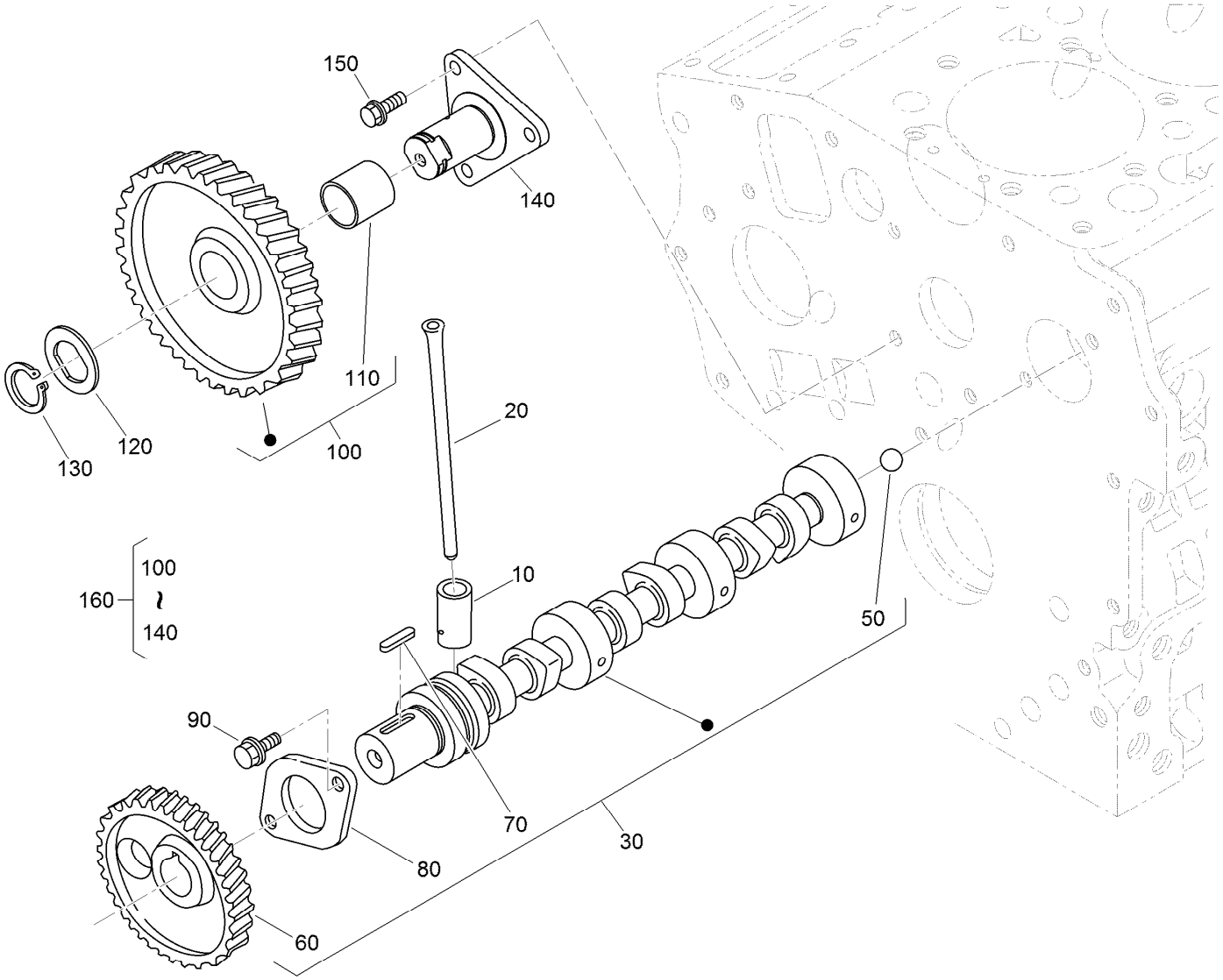

Camshaft and Idle Gear Shaft Assembly

Ref.	Part Number	Qty.	Description
10	110-3727	6	Tappet
20	100-1989	6	Rod-Push
30	120-3126	1	Camshaft ASM
50	110-3729	1	Ball
60	130-1534	1	Gear-Cam
70	98-9378	1	Key-Feather
80	100-1887	1	Stopper-Camshaft
90	98-9350	2	Bolt
100	121-2421	1	Idle Gear ASM
110	121-2422	1	Bushing
120	100-1970	1	Collar-Gear, Idle
130	100-1969	1	Ring-Snap
140	100-1967	1	Shaft-Gear, Idle
150	100-1774	3	Bolt-Flange
160	100-2240	1	Idle Gear ASM

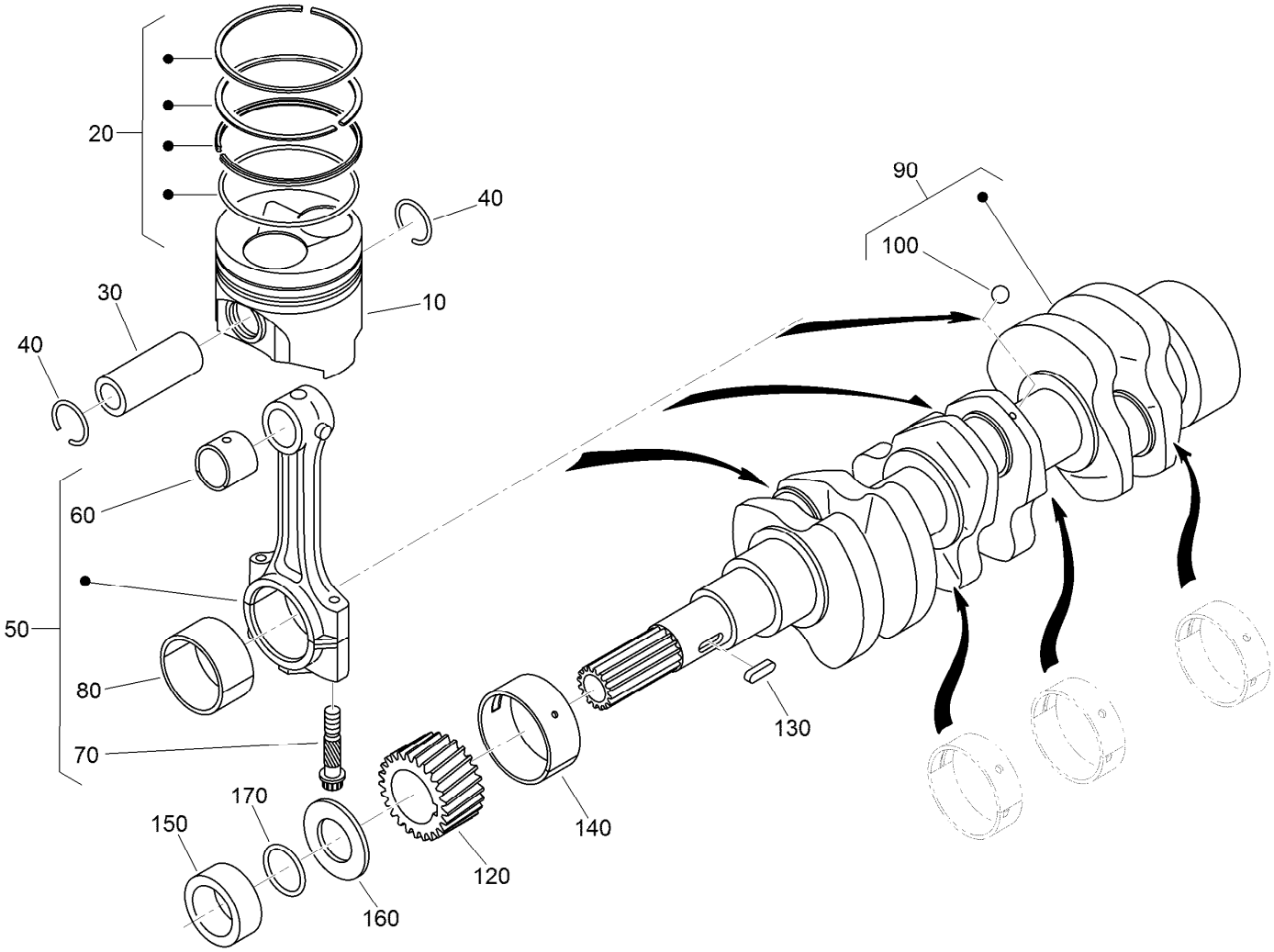

Piston and Crankshaft Assembly

Ref.	Part Number	Qty.	Description
10	130-1518	3	Piston
10	130-1520	3	Piston
20	130-1516	3	Piston Ring ASM
20	130-1517	3	Piston Ring ASM
30	110-3734	3	Pin-Piston
40	100-1835	6	Circlip-Internal
50	125-9070	3	Connecting Rod ASM
60	110-3736	3	Bushing-Pin, Piston
70	100-1999	6	Bolt-Rod, Connecting
80	100-2000	3	Metal-Crankpin (STD)
80	121-3849	3	Metal-Crankpin (-.20MM)

Ref.	Part Number	Qty.	Description
80	121-2420	3	Metal-Crankpin (-.40MM)
90	117-0308	1	Crankshaft
100	100-1791	3	Ball
120	100-1891	1	Gear-Crankshaft
130	100-1752	1	Key-Feather
140	110-3738	1	Metal-Crankshaft (STD)
140	121-2424	1	Metal-Crankshaft (-.20MM)
140	121-2425	1	Metal-Crankshaft (-.40MM)
150	100-1890	1	Collar-Crankshaft
160	100-1974	1	Slinger-Oil
170	100-2209	1	O-Ring

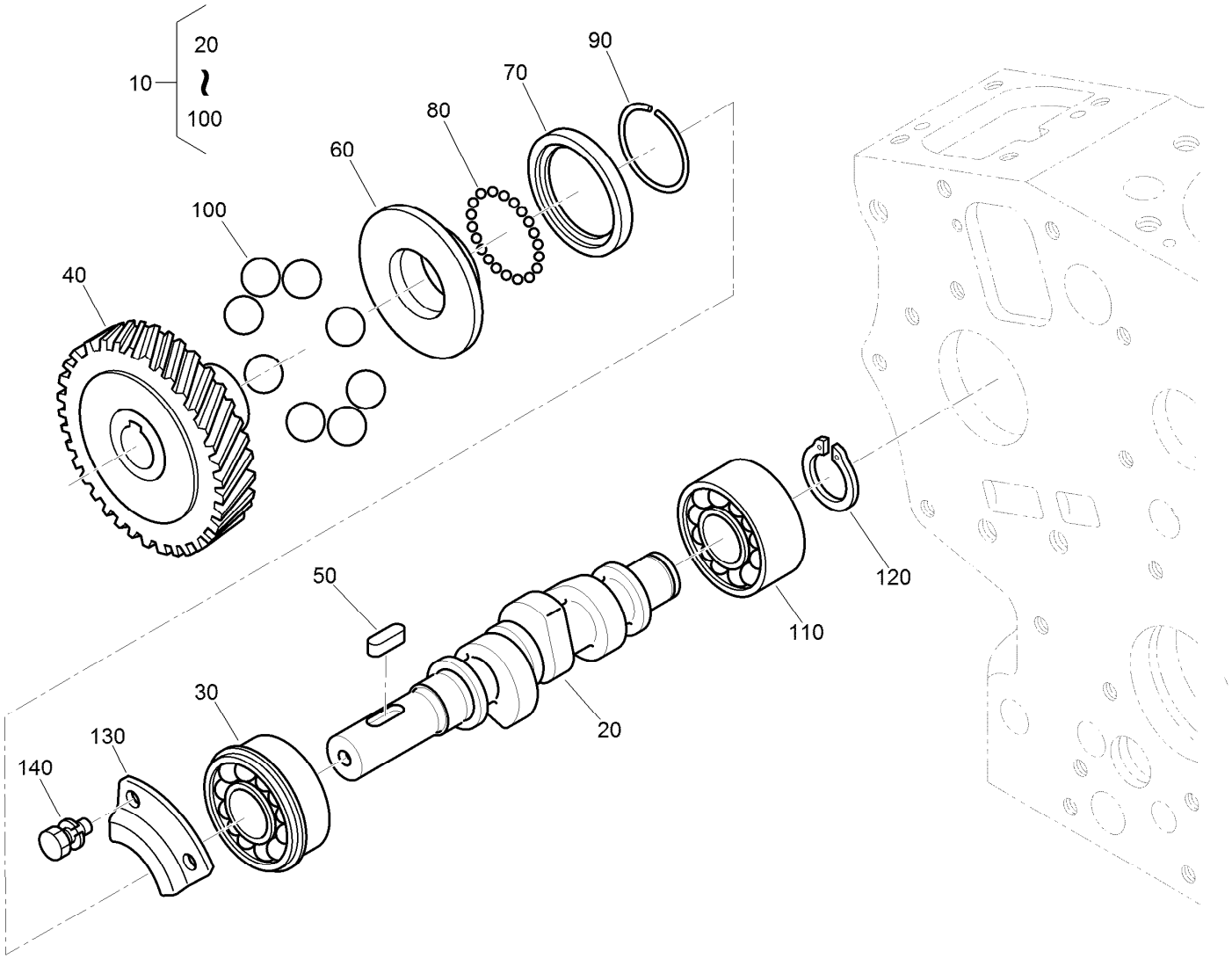

Fuel Camshaft Assembly

Ref.	Part Number	Qty.	Description
10	112-8335	1	Fuel Camshaft ASM
20	110-3756	1	Camshaft-Fuel
30	100-1795	1	Bearing-Ball
40	100-2006	1	Gear-Pump, Injection
50	100-1752	1	Key-Feather
60	112-8336	1	Sleeve-Governor
70	100-1904	1	Case-Ball, Governor
80	100-1790	32	Ball
90	100-1843	1	Circ-Clip
100	100-1793	8	Ball
110	110-3757	1	Bearing-Ball
120	100-1784	1	Circ-Clip, External
130	100-1888	1	Stopper-Fuel, Camshaft
140	98-9350	2	Bolt

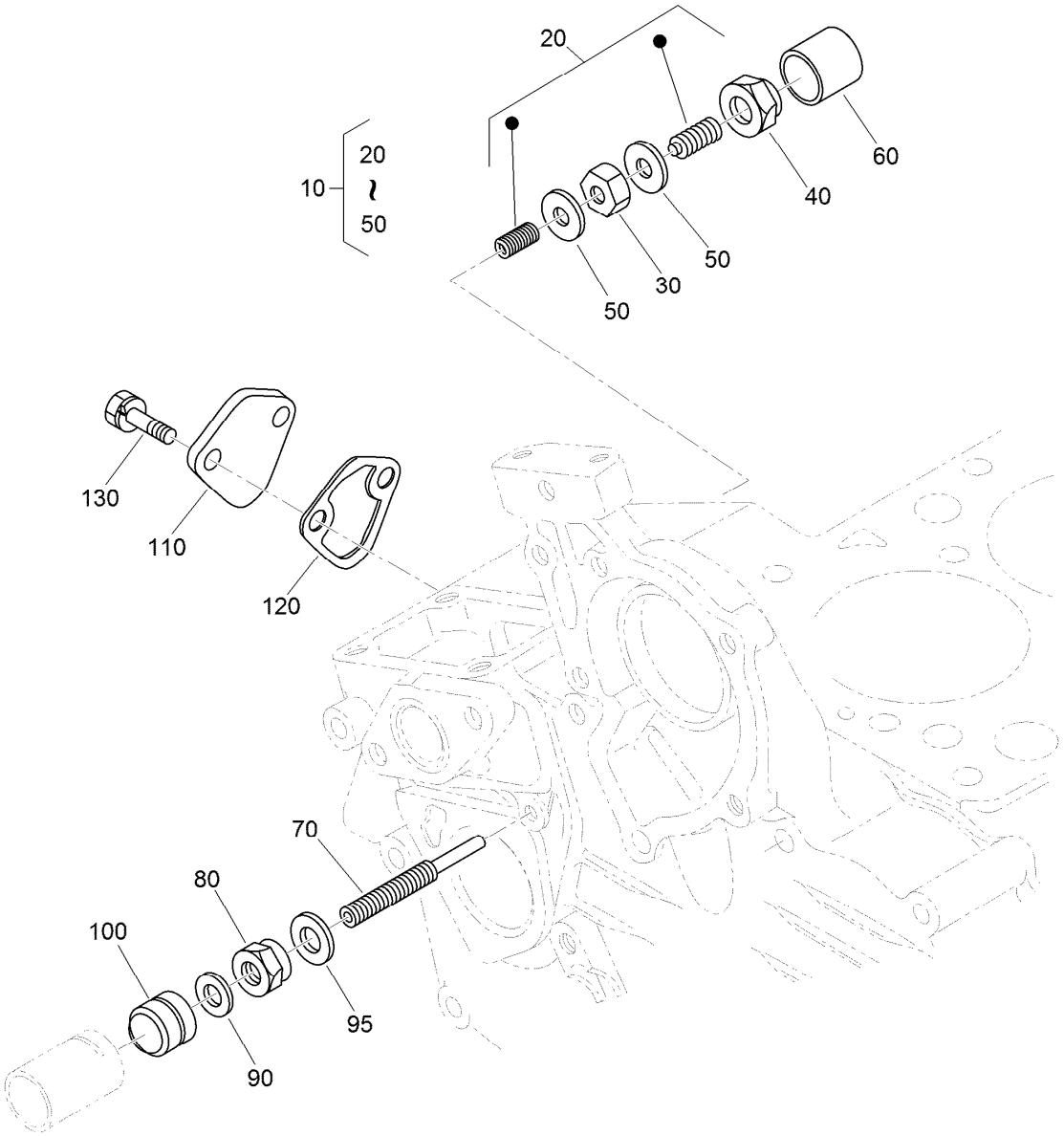

Idle Apparatus and Fuel Pump Cover Assembly

Ref.	*Part Number*	*Qty.*	*Description*
10	100-1898	1	Idle Apparatus ASM
20	100-1899	1	Adjusting Bolt ASM
30	100-1846	1	Nut
40	100-1901	1	Nut-Cap
50	98-7428	2	Gasket
60	100-1902	1	Cap
70	110-3758	1	Bolt-Adjusting
80	100-2175	1	Nut-Lock
90	98-7654	1	Gasket
95	107-9081	1	Gasket
100	99-8387	1	Nut-Cap
110	99-3514	1	Cover
120	98-9636	1	Gasket-Pump, Fuel
130	98-7692	2	Bolt

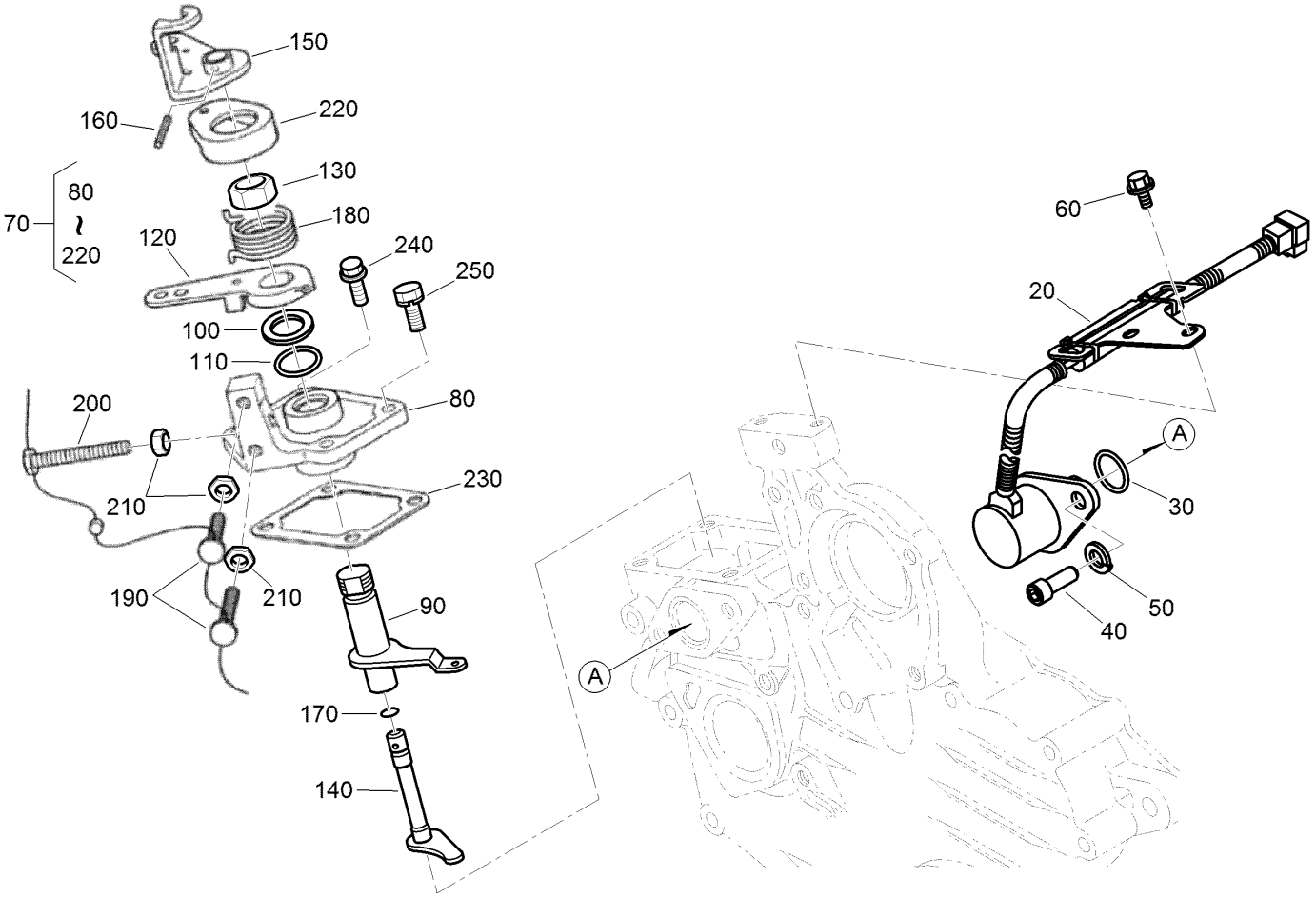

Stop Solenoid and Speed Control Plate Assembly

Ref.	Part Number	Qty.	Description
20	117-2719	1	Solenoid Stop ASM
30	110-3762	1	O-Ring
40	110-3763	2	Bolt-HSH
50	98-7699	2	Washer-Spring
60	100-1774	2	Bolt-Flange
70	110-3769	1	Speed Control Plate ASM
80	110-3770	1	Plate-Control, Speed
90	110-3771	1	Lever-Governor
100	110-3772	1	Collar
110	100-2208	1	O-Ring
120	110-3773	1	Lever-Control, Speed
130	110-3774	1	Nut-Control, Speed

Ref.	Part Number	Qty.	Description
140	110-3775	1	Shaft-Lever
150	110-3776	1	Lever-Stop, Engine
160	110-3777	1	Pin-Spring
170	100-2207	1	O-Ring
180	110-3778	1	Spring-Return
190	120-3133	2	Screw-Stopper
200	120-3134	1	Bolt
210	98-7572	3	Nut
220	110-3779	1	Cap
230	100-1962	1	Gasket-Plate, Control
240	127-0403	2	Bolt-Flange
250	112-2507	2	Bolt

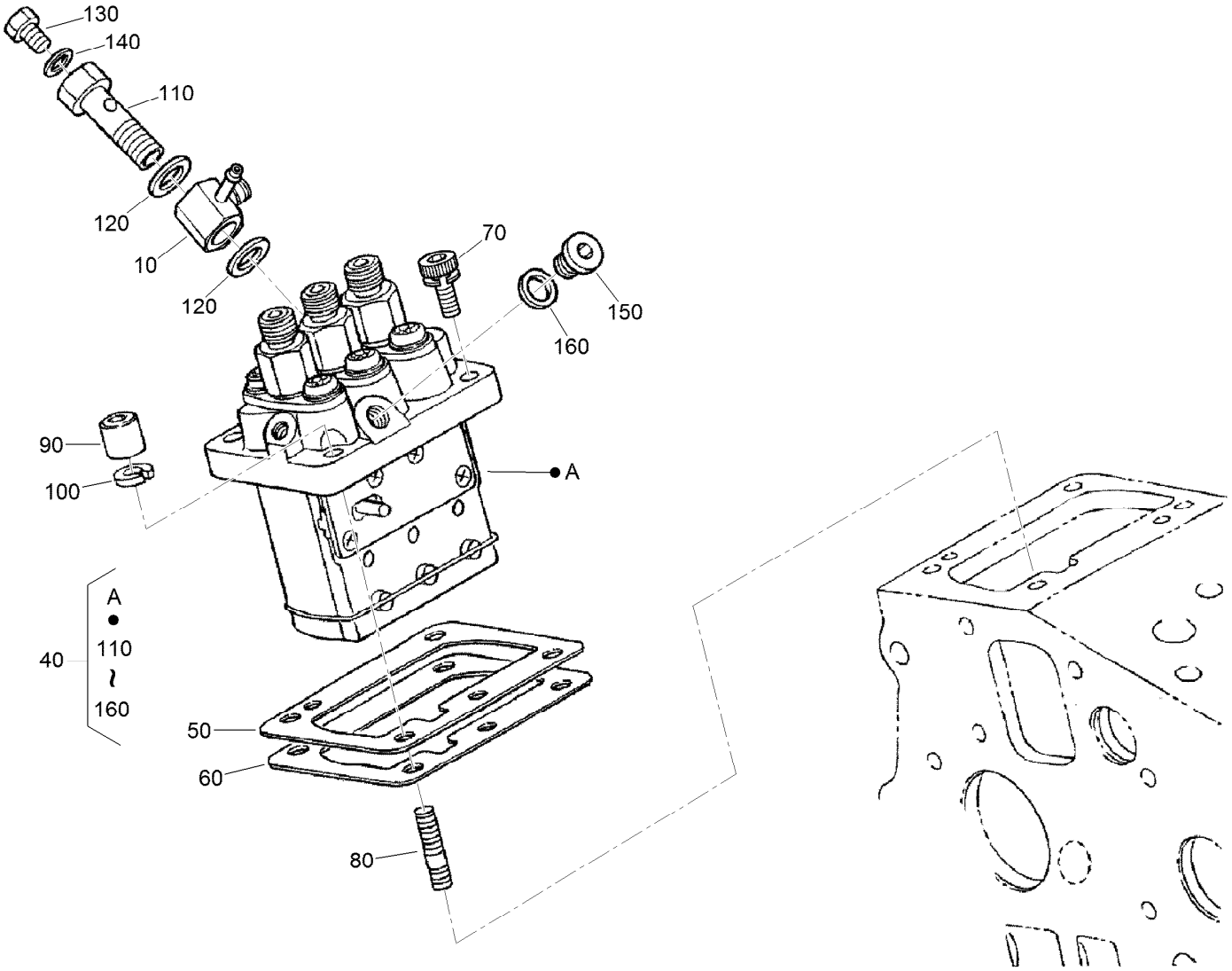

Injection Pump Assembly

Ref.	Part Number	Qty.	Description
10	110-3764	1	Joint
40	110-3765	1	Injection Pump ASM
50	115-3045	1	Shim-Injection (0.175MM)
50	98-9456	1	Shim-Injection (0.20MM)
50	98-9457	1	Shim-Injection (0.25MM)
60	98-9458	1	Shim-Injection (0.30MM)
60	115-3046	1	Shim-Injection (0.35MM)
70	117-7564	2	Bolt-Hex Soc HD
80	98-9438	2	Stud

Ref.	Part Number	Qty.	Description
90	98-9440	2	Nut-Cap
100	98-7699	2	Washer-Spring
110	100-1896	1	Screw-Hollow
120	98-9445	2	Gasket
130	98-9430	1	Screw
140	98-9446	1	Gasket
150	98-9466	1	Plug
160	98-9451	1	Gasket

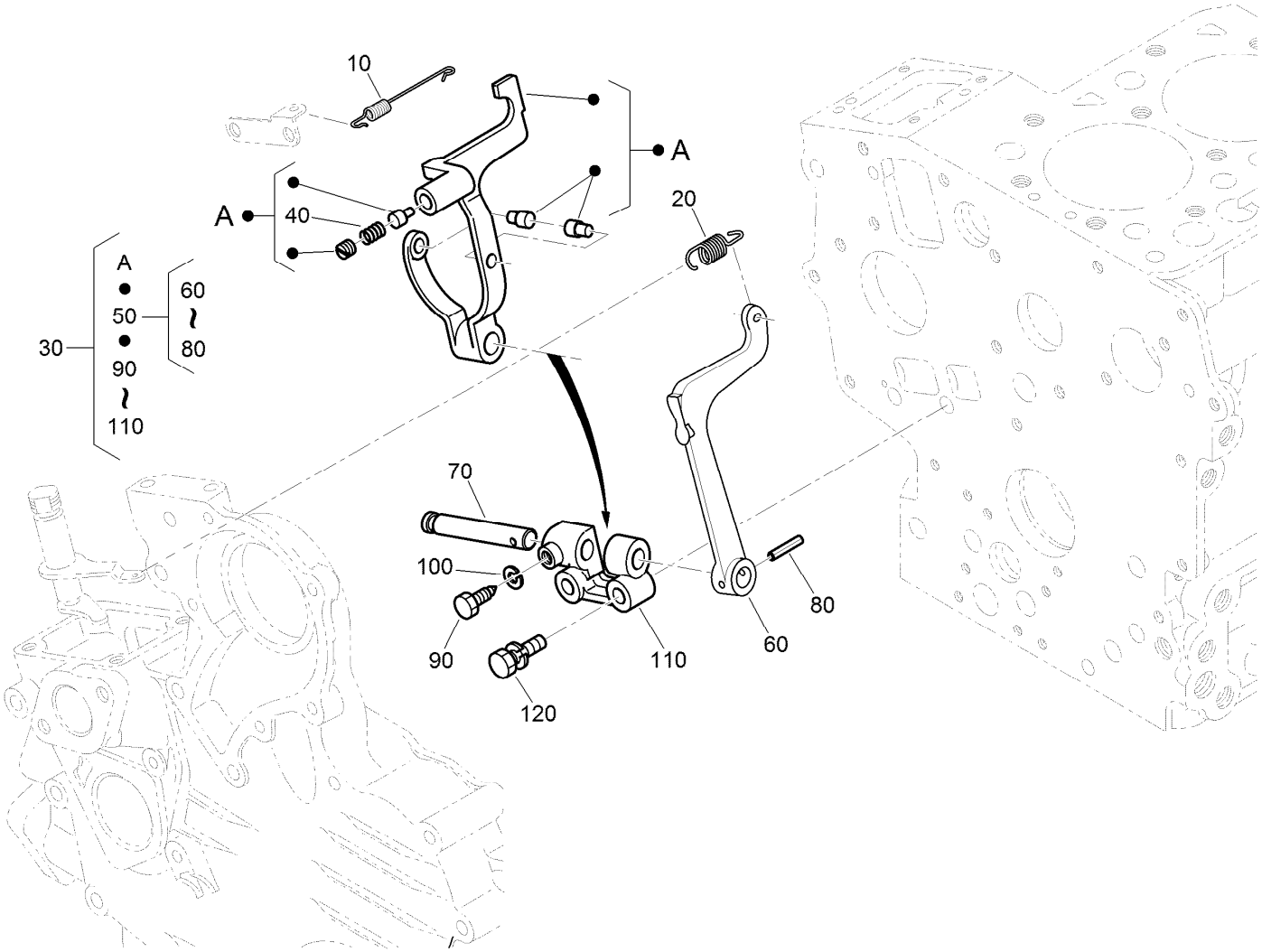

Governor Assembly

Ref.	Part Number	Qty.	Description
10	110-3766	1	Spring-Start
20	130-1220	1	Spring-Governor
30	121-3822	1	Fork Lever ASM
40	121-2410	1	Spring
50	100-1905	1	Fork Lever ASM
60	100-1907	1	Lever-Fork
70	100-1908	1	Shaft-Lever, Fork
80	100-1751	1	Pin-Spring
90	100-1845	1	Bolt
100	100-2204	1	Washer-Spring
110	100-1909	1	Holder-Lever, Fork
120	100-1763	2	Bolt

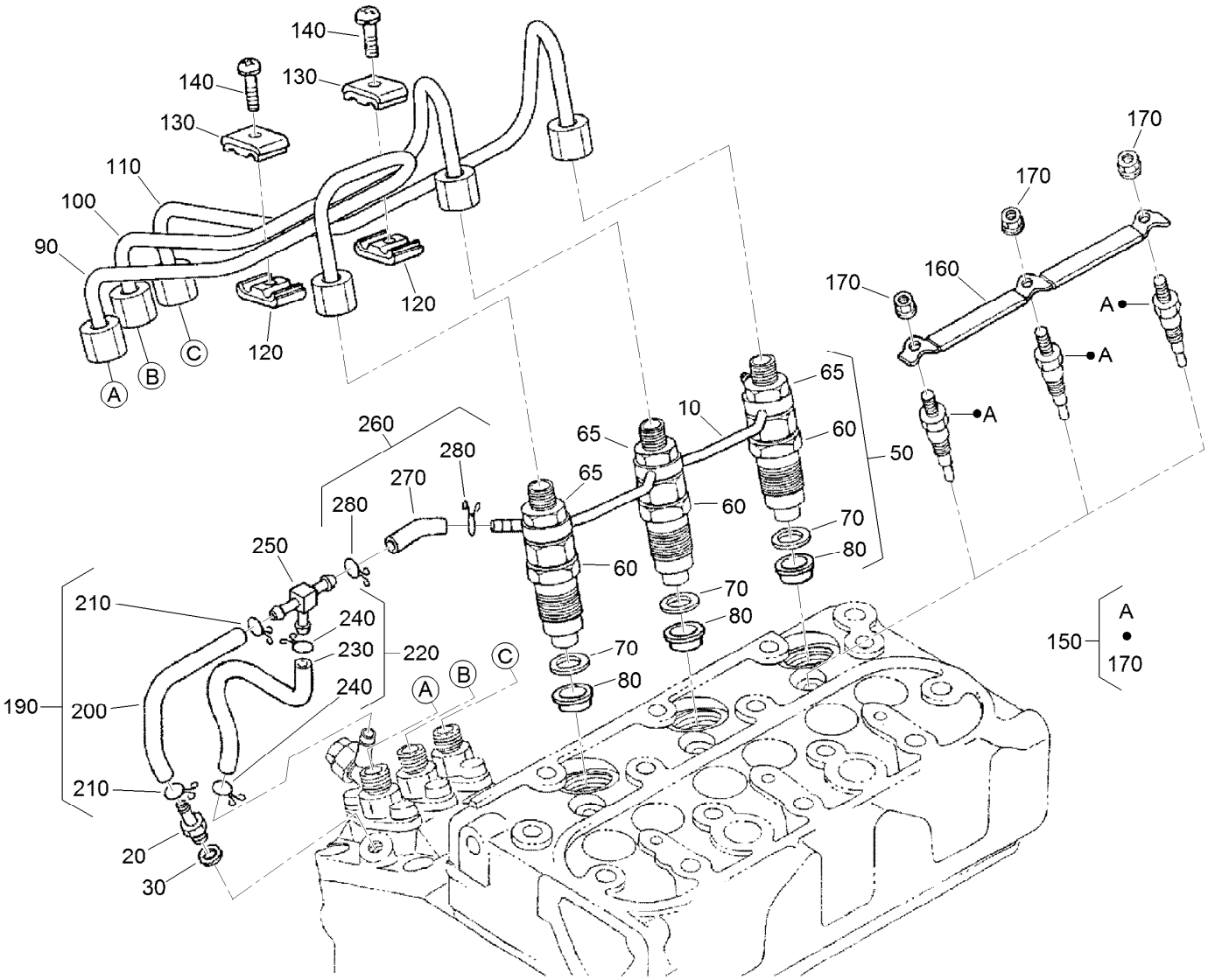

Nozzle Holder and Glow Plug Assembly

Ref.	Part Number	Qty.	Description
10	110-3780	1	Over Flow Pipe ASM
20	98-9431	1	Screw-Bleeder, Air
30	98-7654	1	Gasket
50	130-1305	3	Nozzle Holder Kit
60	130-1303	3	Nozzle Holder ASM
65	121-2411	3	Nut
70	98-7676	3	Gasket
80	98-7677	3	Seal-Heat
90	130-1522	1	Pipe-Injection
100	130-1523	1	Pipe-Injection
110	130-1541	1	Pipe-Injection
120	98-7682	2	Clamp-Pipe
130	98-7683	2	Clamp-Pipe
140	98-7684	2	Screw (W/Washer)

Ref.	Part Number	Qty.	Description
150	130-1411	3	Plug-Glow
160	110-3784	1	Cord-Plug, Glow
170	99-8377	3	Nut-Flange
190	110-3785	1	Fuel Tube ASM
200	110-3786	1	Tube-Fuel
210	98-7671	2	Clip-Pipe
220	110-3787	1	Fuel Tube ASM
230	110-3788	1	Tube-Fuel
240	98-7671	2	Clip-Pipe
250	112-8338	1	Pipe-Joint, T
260	110-3790	1	Fuel Tube ASM
270	110-3791	1	Tube-Fuel
280	98-7671	2	Clip-Pipe

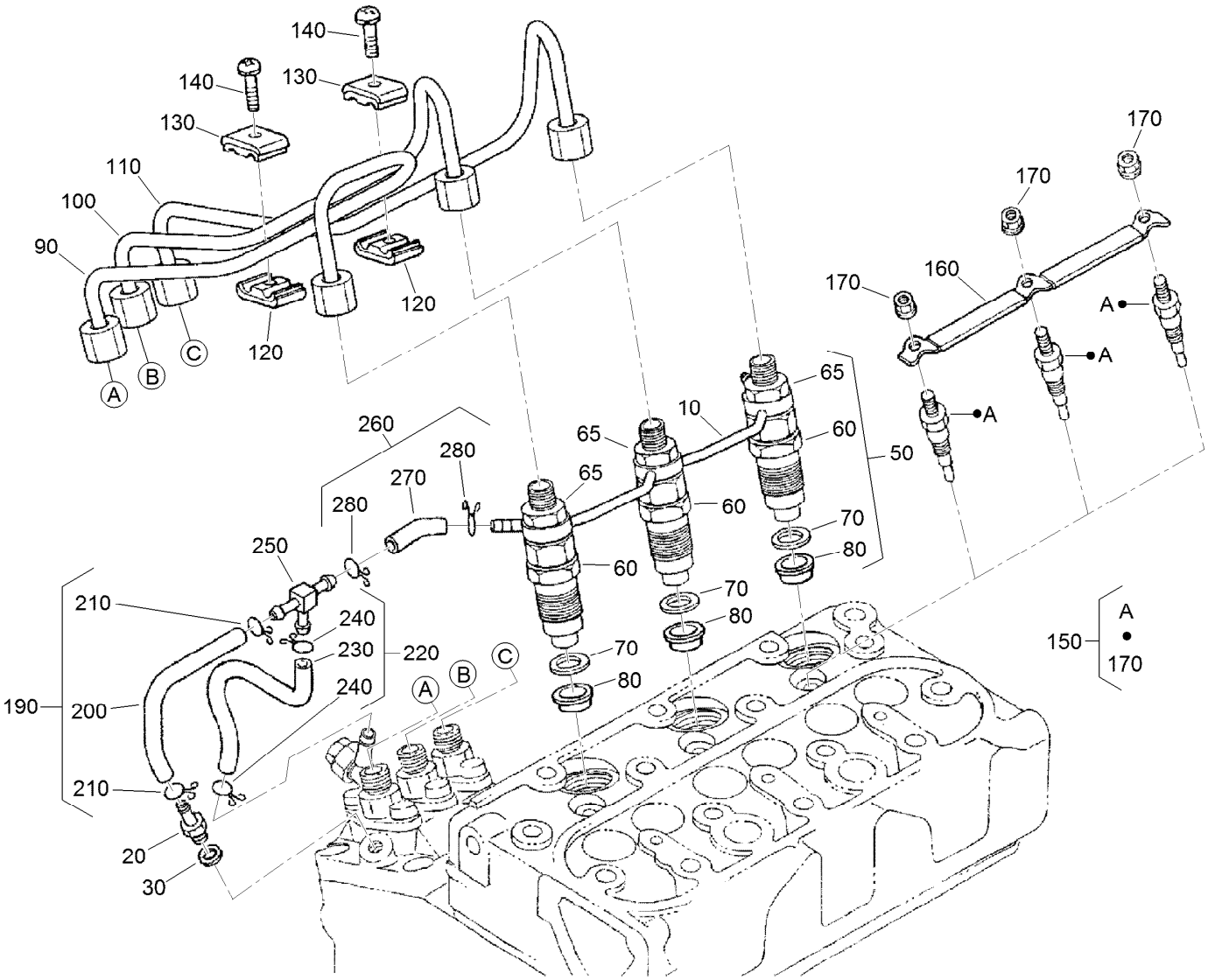

Nozzle Holder and Glow Plug Assembly (continued)

Nozzle Holder Assembly

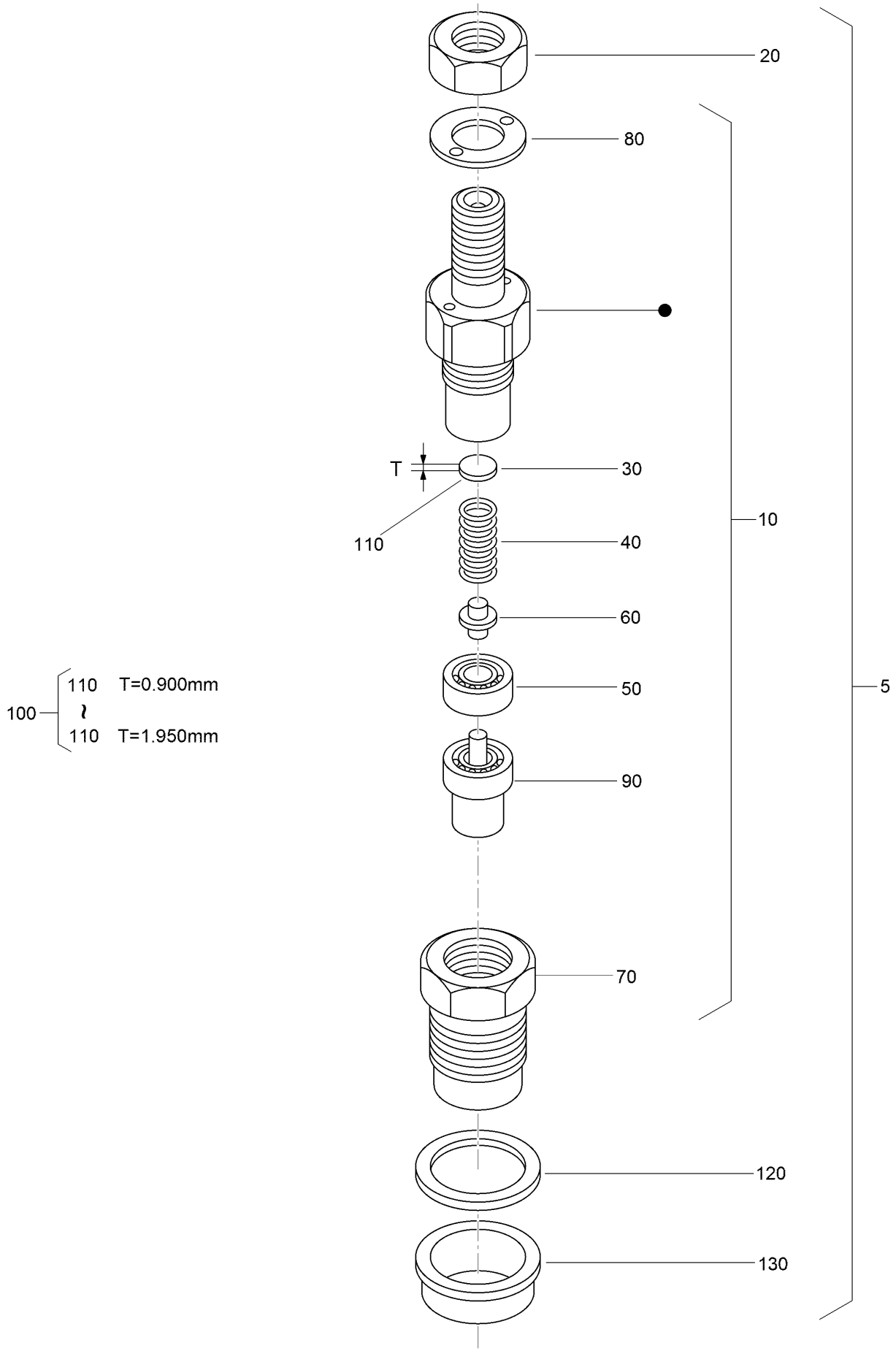

Nozzle Holder Assembly (continued)

Ref.	Part Number	Qty.	Description
5	130-1305	3	Nozzle Holder Kit
10	130-1303	3	Nozzle Holder ASM
20	121-2411	3	Nut
30	99-8302	3	Washer-Adjusting
40	99-8303	3	Spring-Nozzle
50	99-8304	3	Spacer-Distance
60	99-8305	3	Rod-Push
70	130-1304	3	Nut-Nozzle
80	99-8307	3	Washer-Plain
90	130-1497	3	Nozzle-Piece
100	98-9448	3	Adjusting Washer ASM
110	98-7642	3	Washer-Adjusting (0.900Mm)
110	98-7841	3	Washer-Adjusting (0.925Mm)
110	98-7842	3	Washer-Adjusting (0.950Mm)
110	98-7843	3	Washer-Adjusting (0.975Mm)
110	98-7844	3	Washer-Adjusting (1.000Mm)
110	98-7845	3	Washer-Adjusting (1.025Mm)
110	98-7846	3	Washer-Adjusting (1.050Mm)
110	98-7847	3	Washer-Adjusting (1.075MM)
110	98-7848	3	Washer-Adjusting (1.100MM)
110	98-7849	3	Washer-Adjusting (1.125MM)
110	98-7850	3	Washer-Adjusting (1.150MM)
110	98-7851	3	Washer-Adjusting (1.175MM)
110	98-7852	3	Washer-Adjusting (1.200MM)
110	98-7853	3	Washer-Adjusting (1.225MM)
110	98-7854	3	Washer-Adjusting (1.250MM)
110	98-7855	3	Washer-Adjusting (1.275MM)
110	98-7856	3	Washer-Adjusting 1.300MM)
110	98-7857	3	Washer-Adjusting (1.325MM)
110	98-7858	3	Washer-Adjusting (1.350MM)
110	98-7859	3	Washer-Adjusting (1.375MM)
110	98-7860	3	Washer-Adjusting (1.400MM)
110	98-7861	3	Washer-Adjusting (1.425MM)
110	98-7862	3	Washer-Adjusting (1.450MM)
110	98-7863	3	Washer-Adjusting (1.475MM)
110	98-7864	3	Washer-Adjusting (1.500MM)
110	98-7865	3	Washer-Adjusting (1.525MM)
110	98-7866	3	Washer-Adjusting (1.550MM)
110	98-7867	3	Washer-Adjusting (1.575MM)
110	98-7868	3	Washer-Adjusting (1.600MM)
110	98-7869	3	Washer-Adjusting (1.625MM)
110	98-7870	3	Washer-Adjusting (1.650MM)
110	98-7871	3	Washer-Adjusting (1.675MM)
110	98-7872	3	Washer-Adjusting (1.700MM)
110	98-7873	3	Washer-Adjusting (1.725MM)
110	98-7874	3	Washer-Adjusting (1.750MM)
110	98-7875	3	Washer-Adjusting (1.775MM)
110	98-7876	33	Washer-Adjusting (1.800MM)
110	98-7877	3	Washer-Adjusting (1.825MM)
110	98-7878	3	Washer-Adjusting (1.850MM)
110	98-7879	3	Washer-Adjusting (1.875MM)
110	98-7880	3	Washer-Adjusting (1.900MM)
110	98-7881	3	Washer-Adjusting (1.925MM)
110	98-7882	3	Washer-Adjusting (1.950MM)
120	98-7676	3	Gasket
130	98-7677	3	Seal-Heat

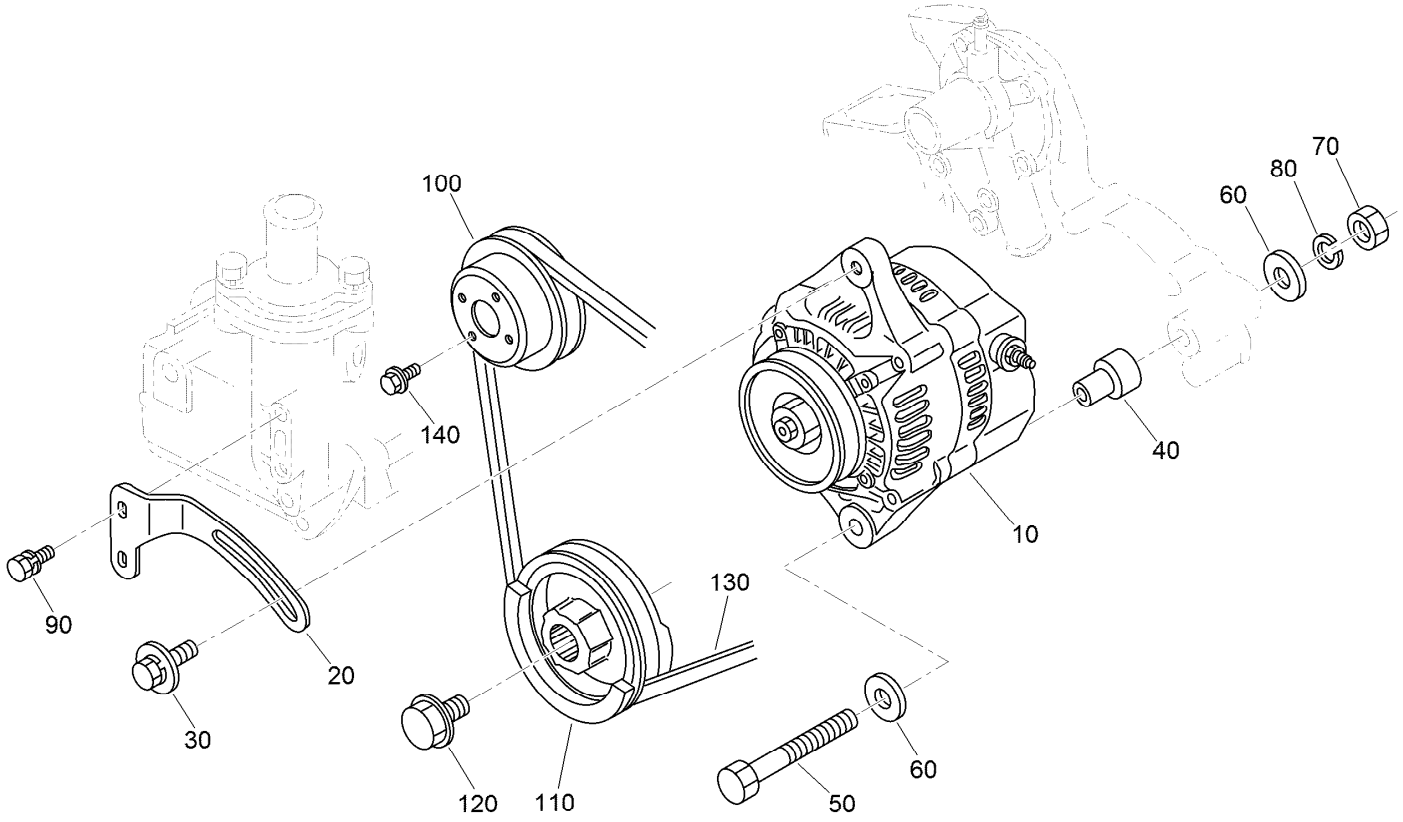

Alternator and Pulley Assembly

Ref.	*Part Number*	*Qty.*	*Description*
10	98-9474	1	Alternator ASM
20	121-2412	1	Stay-Alternator
30	121-2413	1	Bolt
40	110-3794	1	Collar
50	121-2418	1	Bolt-Hex
60	120-5832	2	Washer-Plain
70	98-7534	1	Nut
80	105-2893	1	Washer-Spring
90	98-7692	2	Bolt
100	100-1921	1	Pulley-Fan
110	130-1487	1	*obs* Pulley-Drive, Fan
120	100-1978	1	Bolt
130	119-4486	1	Belt-V, Fan
140	99-8363	4	Bolt-Flange

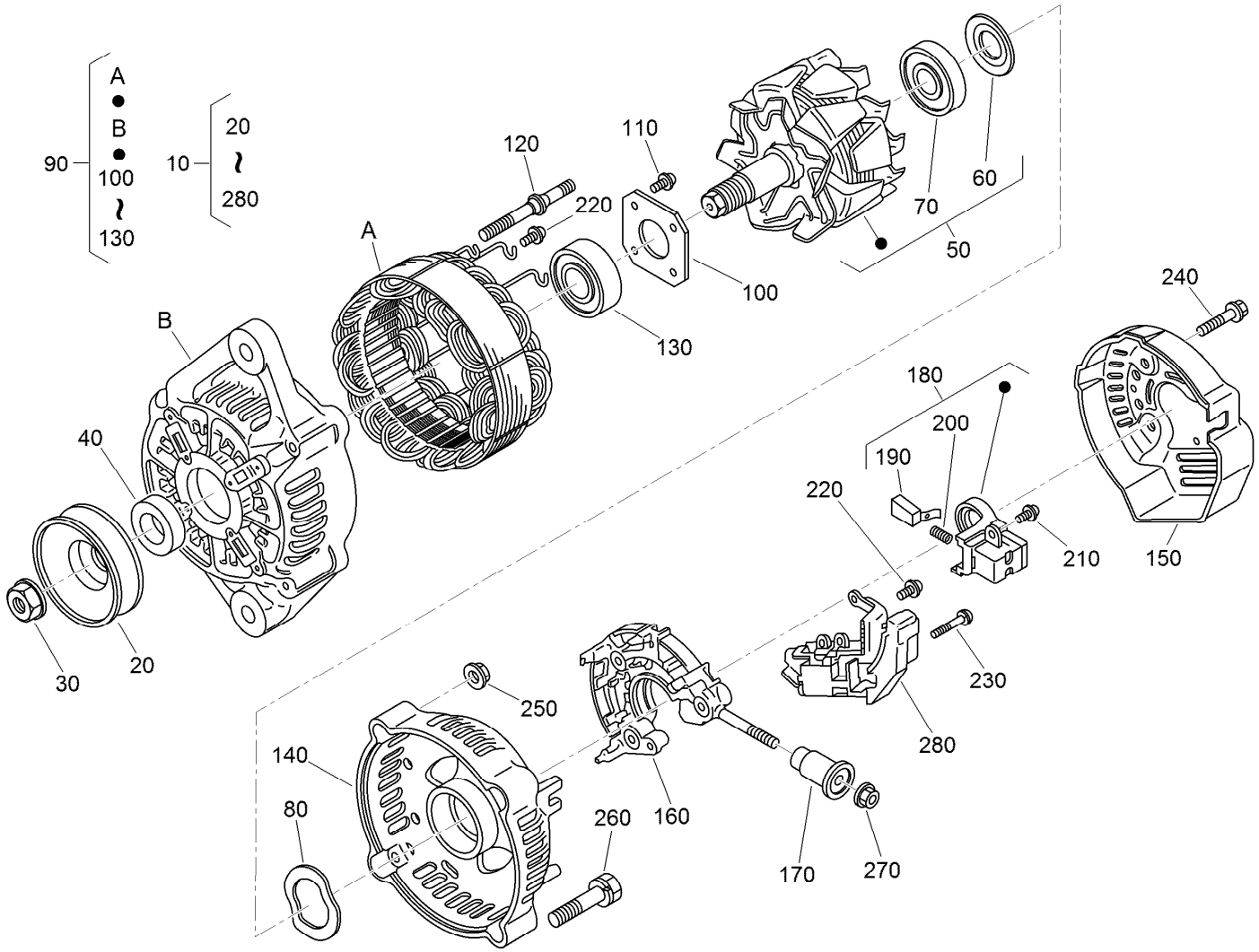

Alternator Components Assembly

Ref.	Part Number	Qty.	Description
10	98-9474	1	Alternator ASM
20	98-9453	1	Pulley-Dynamo
30	98-7708	1	Nut
40	98-7709	1	Collar
50	107-0136	1	Rotor ASM
60	98-7711	1	Cover-Bearing
70	107-0138	1	Bearing-Ball
80	98-7713	1	Washer-Thrust
90	107-0139	1	Drive End Frame ASM
100	98-7715	1	Plate-Retainer
110	98-7716	4	Screw-Head, Round
120	98-7717	2	Bolt-Through
130	107-0137	1	Bearing-Ball
140	107-9087	1	Frame-End

Ref.	Part Number	Qty.	Description
150	107-0140	1	Cover-End
160	127-1612	1	Rectifier ASM
170	98-7722	1	Bushing-Insulation
180	107-0141	1	Brush Holder ASM
190	98-7724	2	Brush
200	98-7725	2	Spring-Brush
210	98-7726	2	Screw-Head, Round
220	98-7727	6	Screw-Head, Round
230	98-7728	1	Screw-Head, Round
240	98-7729	3	Bolt
250	98-7730	2	Nut
260	98-7731	2	Bolt
270	98-7732	1	Nut
280	110-3799	1	Regulator ASM

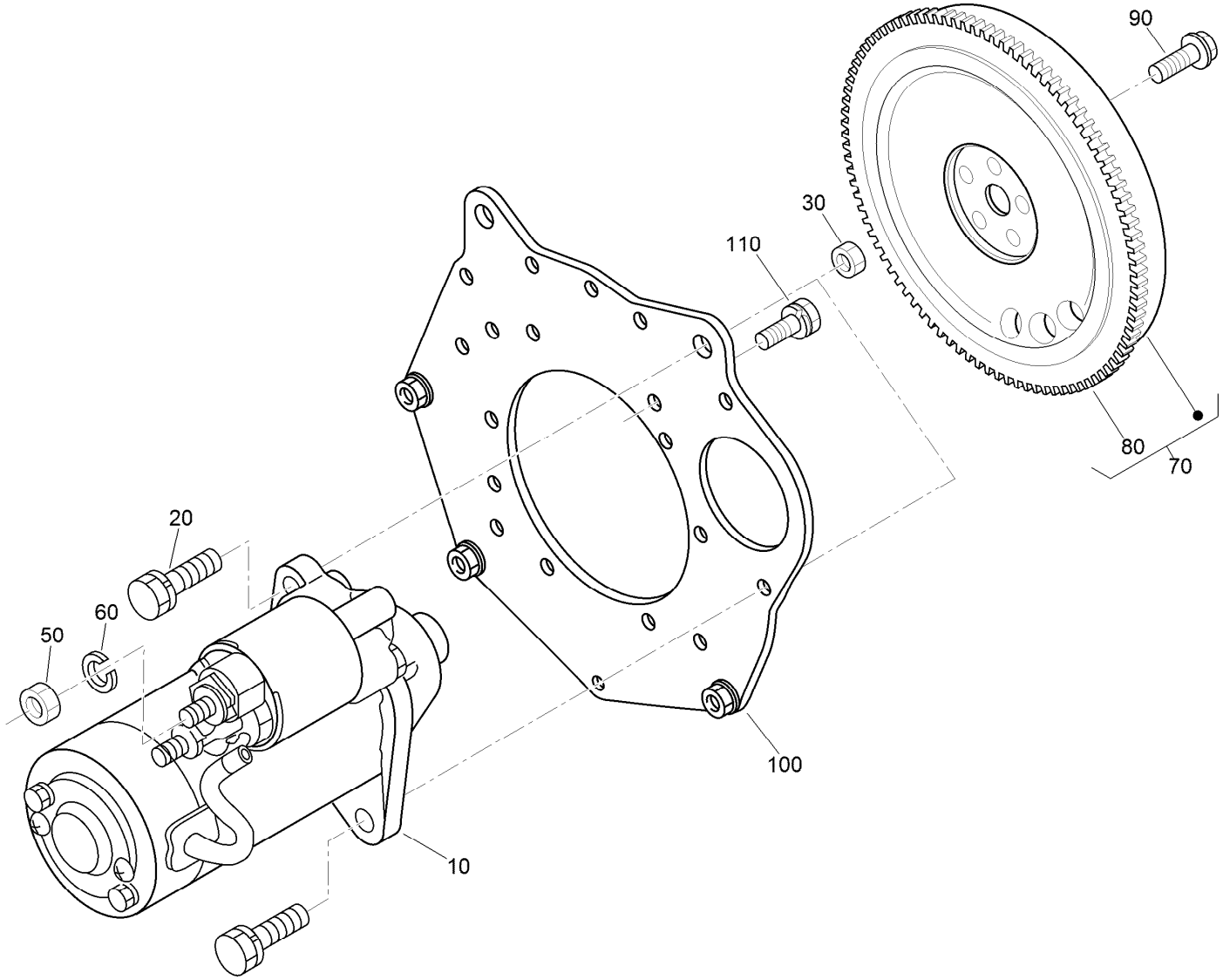

Starter and Flywheel Assembly

Ref.	Part Number	Qty.	Description
10	130-1294	1	Starter ASM
20	98-7697	2	Bolt
30	98-7534	2	Nut
50	98-7534	1	Nut
60	105-2893	1	Washer-Spring
70	130-1369	1	Flywheel ASM
80	127-1604	1	Gear-Ring
90	100-1930	5	Bolt-Flywheel
100	120-3130	1	Plate-End, Rear
110	110-3754	10	Bolt

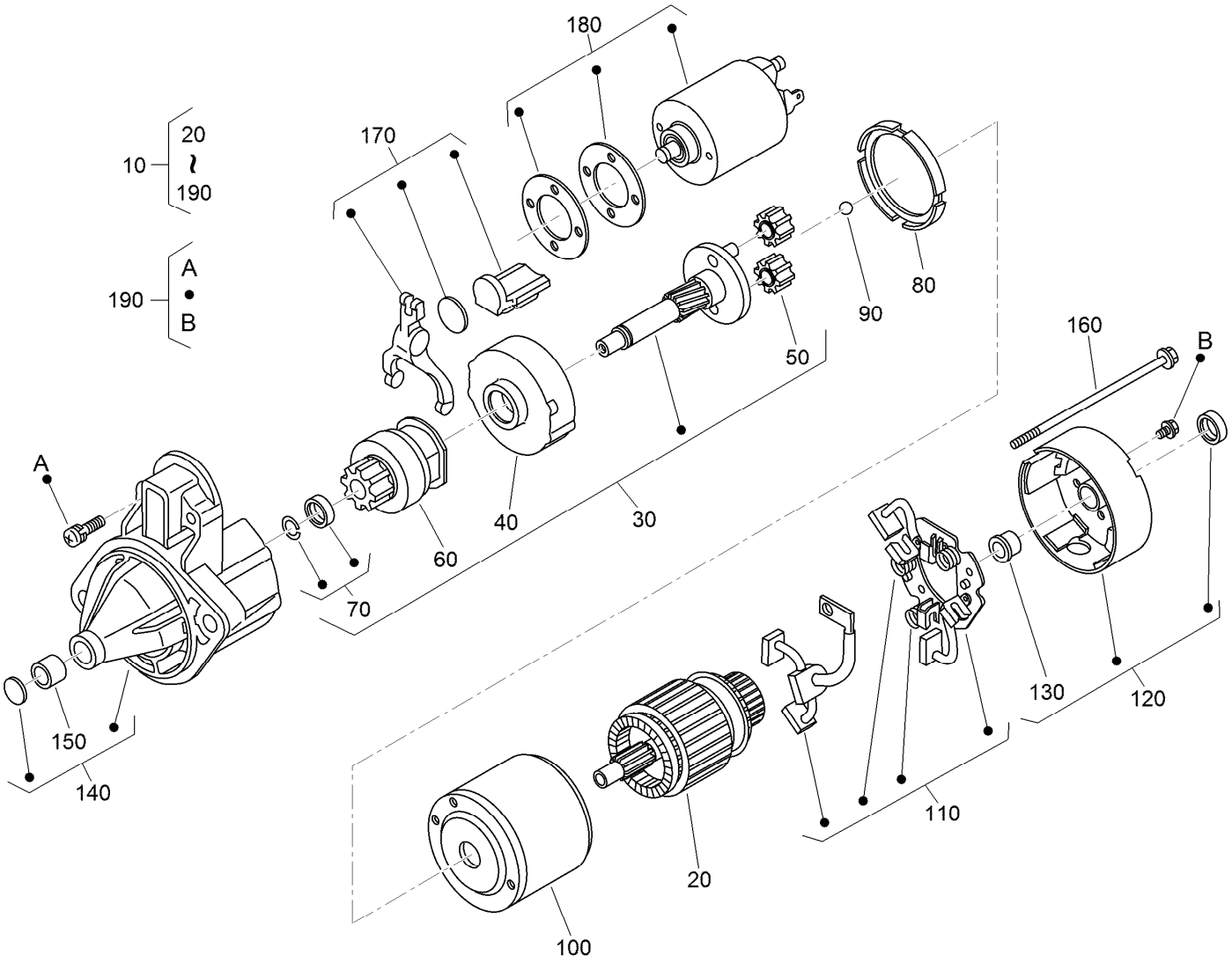

Starter Component Assembly

Ref.	Part Number	Qty.	Description
10	130-1294	1	Starter ASM
20	110-3801	1	Armature
30	110-3802	1	Shaft ASM
40	120-3142	1	Gear-Internal
50	110-3804	3	Gear-Planetary
60	110-3805	1	Clutch-Running, Over
70	110-3806	1	Stopper
80	120-3143	1	Gasket
90	110-3808	1	Ball
100	130-1295	1	Yoke

Ref.	Part Number	Qty.	Description
110	110-3810	1	Brush Holder ASM
120	110-3811	1	Rear Bracket ASM
130	110-3812	1	Bushing
140	110-3813	1	Front Bracket ASM
150	110-3814	1	Bushing
160	110-3815	2	Bolt
170	110-3816	1	Fork Lever ASM
180	125-9099	1	Switch-Magnetic
190	110-3818	2	Screws (Set Of 4)

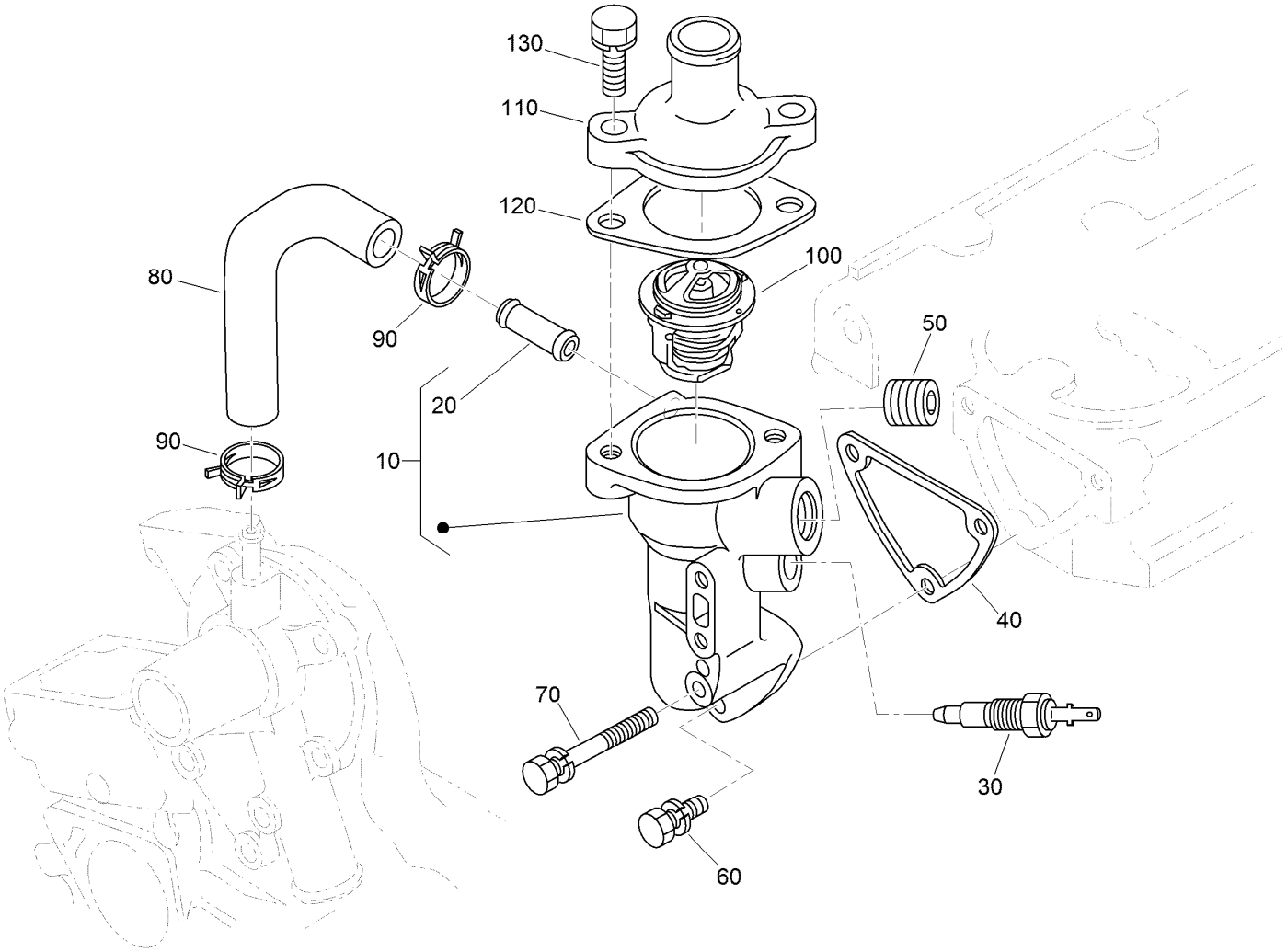

Water Flange and Thermostat Assembly

Ref.	Part Number	Qty.	Description
10	121-2414	1	Water Flange ASM
20	98-9580	1	Pipe-Return, Water
30	100-1983	1	Thermo-Switch
40	110-3820	1	Gasket-Flange, Water
50	105-2874	1	Plug
60	98-7692	2	Bolt
70	125-9063	1	Bolt-Sems
80	100-2017	1	Pipe-Return, Water
90	125-9078	2	Clamp-Hose
100	98-7778	1	Thermostat ASM
110	121-2415	1	Cover-Thermostat
120	105-3748	1	Gasket-Thermostat
130	98-7438	2	Bolt

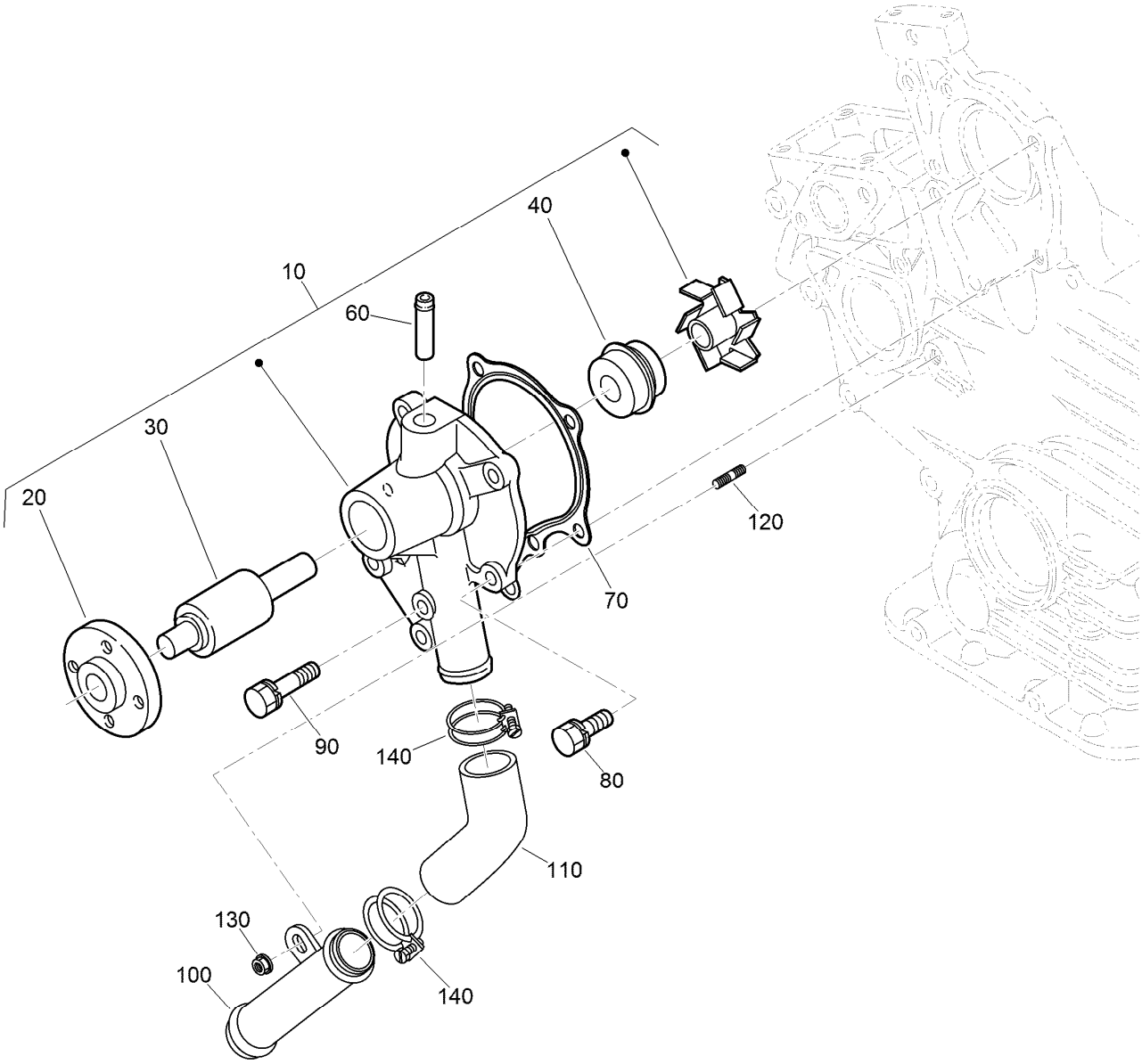

Water Pump and Water Pipe Assembly

Ref.	Part Number	Qty.	Description
10	127-1607	1	Water Pump ASM
20	125-9081	1	Flange-Pump, Water
30	100-1934	1	Bearing-Ball
40	99-3518	1	Water Pump Seal ASM
60	100-1932	1	Pipe-Return, Water
70	117-8846	1	Gasket-Pump, Water
80	100-1750	4	Bolt
90	100-1764	1	Bolt
100	112-2835	1	Pipe-Water
110	112-2836	1	Hose-Water
120	100-1924	1	Stud
130	100-2203	1	Nut-Flange
140	110-3828	2	Band-Pipe

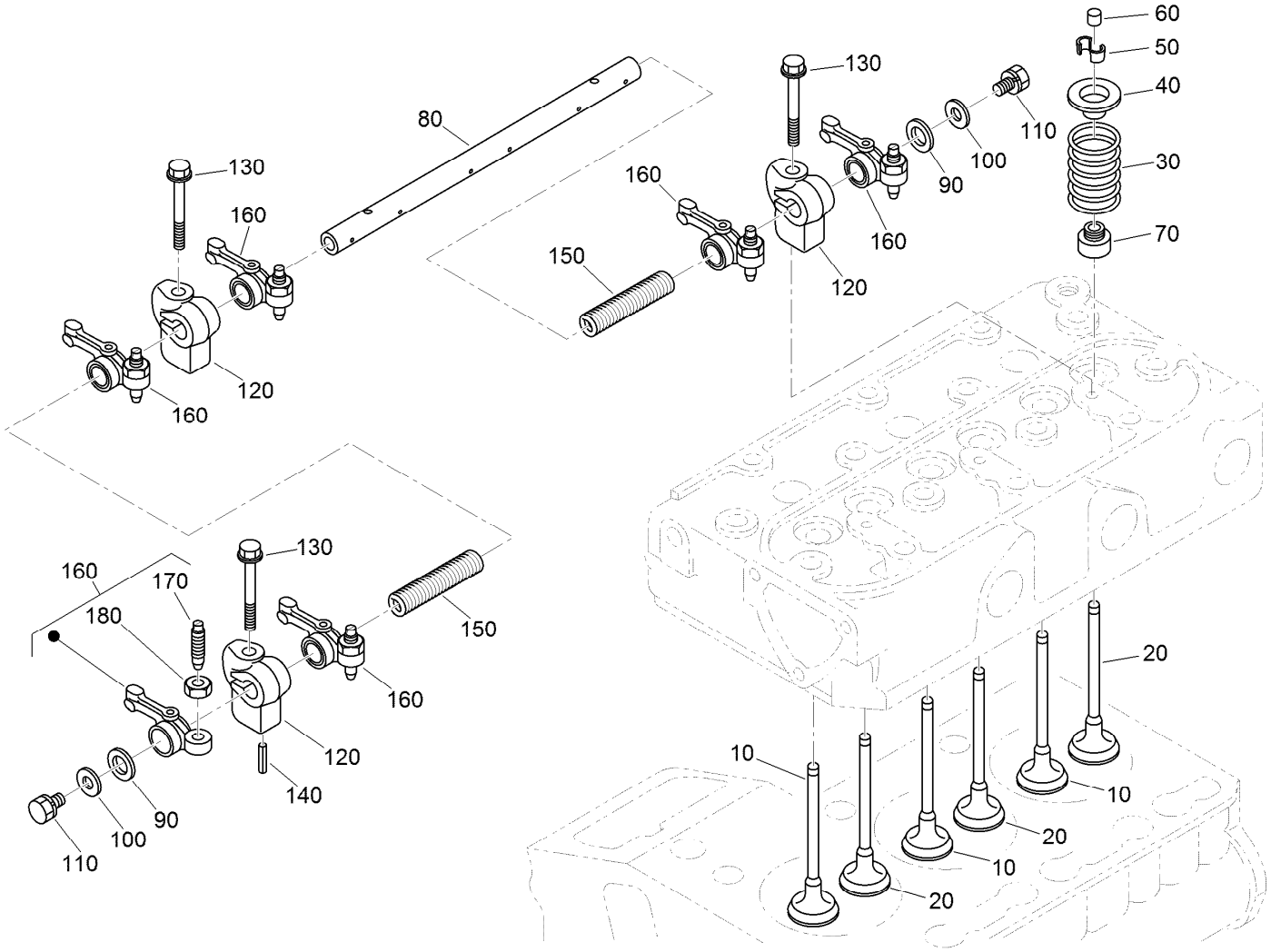

Valve and Rocker Arm Assembly

Ref.	Part Number	Qty.	Description
10	112-2514	3	Valve-Inlet
20	112-2515	3	Valve-Exhaust
30	100-1823	6	Spring-Valve
40	100-1825	6	Retainer-Spring, Valve
50	120-3136	6	Collet-Spring, Valve
60	100-2155	6	Cap-Valve
70	100-1797	6	Seal-Stem, Valve
80	112-8341	1	Shaft-Arm, Rocker
90	100-2044	2	Washer

Ref.	Part Number	Qty.	Description
100	110-3832	2	Washer-Plain
110	100-1762	2	Bolt
120	110-3833	3	Bracket-Arm, Rocker
130	110-3834	3	Bolt-Flange
140	98-7602	1	Pin-Spring
150	112-8342	2	Spring
160	100-1884	6	Rocker Arm ASM
170	100-1885	6	Screw-Adjusting
180	100-1827	6	Nut

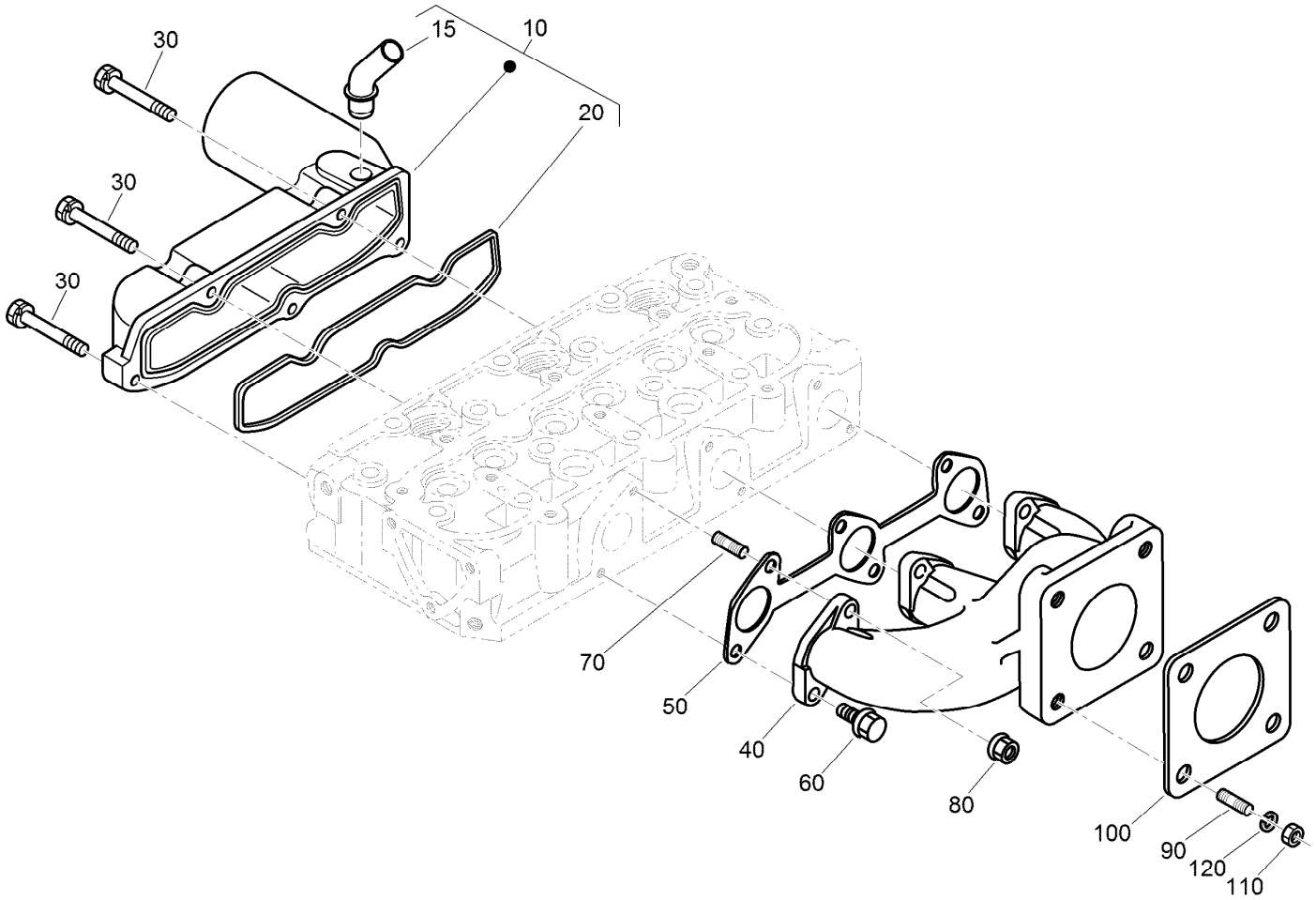

Inlet and Exhaust Manifold Assembly

Ref.	*Part Number*	*Qty.*	*Description*
10	120-3141	1	Intake Manifold ASM
15	121-2417	1	Pipe-Breather
20	110-3838	1	Gasket-Manifold, Intake
30	98-9352	5	Bolt
40	110-3839	1	Manifold-Exhaust
50	110-3840	1	Gasket-Manifold, Exhaust
60	130-1514	3	Bolt-Ubs
70	130-1156	3	Bolt-Stud
80	100-1778	3	Nut
90	98-7769	4	Stud
100	99-8343	1	Gasket-Muffler
110	98-7534	4	Nut
120	105-2893	4	Washer-Spring

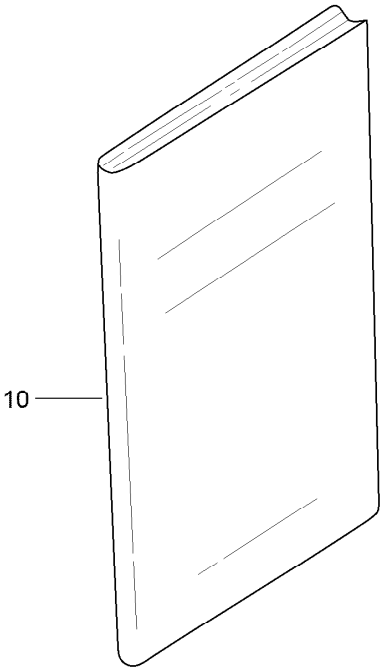

Miscellaneous Engine Parts

Ref.	*Part Number*	*Qty.*	*Description*
10	130-1513	1	Manual-Operator

Attachments and Accessories

For 04384 Greensmaster 3250-D 2-Wheel Drive Traction Unit

Product Name	Model/Part
Turf Evaluator	04399
Three-Wheel Drive Kit without ROPS	04477
Dethatching Unit	04479
Spiker Kit	04494
Tri-Roller Kit	04495
Leak Detector Kit	04497
Light Kit	04551
8-Blade DPA Reel Mower	04618
11-Blade DPA Reel Mower	04619
14-Blade DPA Reel Mower	04624
Hose Adapter Kit	100-6430
Weight Kit, Greensmaster and Sand Pro/Infield Pro Traction Unit	100-6442
Oil Cooler Kit	104-7701
Ground-Following Suspension Kit	104-9400
Radiator Screen Kit	105-9766
Premium All Season Hydraulic Fluid (55 Gallon Drum)	108-1177
Premium All Season Hydraulic Fluid (5 Gallon Pail)	108-1178
Filter-Air	108-3811
Seperator Filter ASM	110-9044
Bimini Folding Shade Assembly	115-4510
Wireless Hourmeter	115-4754
Filter-Oil, Engine	115-8189
Hydraulic Hose Kit	117-2721
Premium Synthetic Bio-Degradable Hydraulic Fluid (5 Gallon Pail)	119-2157
Premium Synthetic Bio-Degradable Hydraulic Fluid (55 Gallon Drum)	119-2158
Spark Arrester Kit	120-1951
Premium Engine Oil 10w30 (55 Gallon Drum)	121-6392
Premium Engine Oil 10w30 (5 Gallon Pail)	121-6393
Toro Reel Paper (10 Pack)	125-5610
Toro Reel Shim (0.002in)	125-5611
MVP Filter Kit	30086
Arm Rest Kit	30707
Weight Kit, Greensmaster 3100, 3150 or 3250-D Traction Unit with Three-Wheel Drive	99-1645
Tire-TURFMATE	99-4506

TORO®

Count on it.