Form No. 3422-532 Rev E

TORO®

Count on it.

Parts Catalog

# Greensmaster® 3250-D

## 2-Wheel Drive Traction Unit

**Model No. 04384—Serial No. 403030001 and Up**

Register at www.Toro.com.
Original Instructions (EN)

CE

*3422-532* E

# Ordering Replacement Parts

To order replacement parts, please supply the part number, the quantity, and the description of each part desired.

### Understanding Reference Numbers

Each identified part in an illustration has a reference number. The reference number for a part also appears in the parts list, along with other information about the part.

This catalog uses two special reference number formats, one to indicate parts in a service assembly and another to indicate the quantity of a given part in an illustration.

### Service Assembly Reference Numbers

Parts in service assemblies have reference numbers in the form a:b. The a represents the reference number of the entire service assembly and the b represents a sequential number unique to each part within the service assembly.

For example, a wheel assembly might be identified by reference number 6, the tire by 6:1, the valve by 6:2, and the wheel by 6:3. When you order the assembly identified by reference number 6, you receive all parts identified by reference numbers 6:1,6:2, and 6:3. However, you may also order any part individually. Reference numbers of this type appear in illustration and in parts lists.

### Reference Numbers Indicating Quantity

In an illustration, if a reference number indicates more than one part, the reference number has the form nX y. The n represents the quantity of the part, the X is the multiplication symbol, and the y represents the reference number.

For example, in an illustration, the reference number 2X 37 means that two of the parts identified by reference number 37 are indicated.

# Contents


Roll-Over Protection System Assembly . . . 5
Frame Assembly. . . . 6
Traction Control Assembly . . . 7
Brake Pedal Assembly . . . 9
Steering Arm Assembly. . . . 10
Operator Platform Assembly . . . 11
Seat Assembly . . . 12
Engine Assembly . . . 14
Intake and Exhaust Assembly . . . 16
Air Cleaner Assembly No. 95-5805. . . . 17
Radiator Assembly. . . . 18
Fuel System Assembly . . . 19
Hydraulic Tank and Filter Assembly. . . . 20
Hydrostat and Gear Pump Drive Assembly . . . 21
Hydraulic Pump Assembly No. 121-9557. . . . 23
Hydraulic Gear Pump Assembly No. 114-9956. . . . 25
Manifold Assembly. . . . 26
Hydraulic Manifold Assembly No. 112-9197 . . . 27
Steering Valve Assembly. . . . 29
Steering Valve Assembly No. 114-4672. . . . 30
Hydraulic Cylinder Assembly No. 132-3778 . . . 31
Left Hand Wheel Motor and Lift Cylinder Assembly . . . 32
Hydraulic Motor Assembly (CCW) No. 110-4015 . . . 33
Hydraulic Cylinder Assembly No. 105-3821 . . . 34
Right Hand Wheel Motor and Lift Cylinder Assembly . . . 35
Hydraulic Motor Assembly (CW) No. 110-4016. . . . 36
Hydraulic Reel Motor Assembly No. 120-2072 . . . 37
Front Reel Motors Assembly . . . 38
Center Lift Cylinder Assembly . . . 39
Hydraulic Cylinder Assembly No. 105-3820 . . . 40
Console Assembly . . . 41
Joystick Bracket Assembly No. 120-5280 . . . 42
Electrical Harness Assembly . . . 43
Battery Assembly . . . 44
Front Wheel and Brake Assembly . . . 45
Rear Wheel and Brake Assembly . . . 46
Right Cutting Unit Suspension Assembly . . . 47
Left Cutting Unit Suspension Assembly . . . 49
Center Cutting Unit Suspension Assembly. . . . 51
Crankcase Assembly. . . . 53
Oil Pan, Oil Pump and Dipstick Assembly . . . 54
Cylinder Head Assembly. . . . 55
Gear Case and Oil Filter Cartridge Assembly . . . 56
Cylinder Head Cover Assembly. . . . 57
Main Bearing Case Assembly . . . 58
Camshaft and Idle Gear Shaft Assembly . . . 59
Piston and Crankshaft Assembly. . . . 60
Fuel Camshaft Assembly . . . 61
Idle Apparatus and Fuel Pump Cover Assembly. . . . 62
Stop Solenoid and Speed Control Plate Assembly . . . 63
Injection Pump Assembly . . . 64
Governor Assembly . . . 65
Nozzle Holder and Glow Plug Assembly . . . 66
Nozzle Holder Assembly. . . . 68



**© 2023—The Toro® Company**


**8111 Lyndale Avenue South**
**Bloomington, MN 55420**





**Contact us at www.Toro.com.**
**Printed in the USA.**


**All Rights Reserved**

# Contents (continued)

Alternator and Pulley Assembly . . . . . 70
Alternator Components Assembly . . . . . 71
Starter and Flywheel Assembly . . . . . 72
Starter Component Assembly . . . . . 73
Water Flange and Thermostat Assembly . . . . . 74
Water Pump and Water Pipe Assembly . . . . . 75
Valve and Rocker Arm Assembly . . . . . 76
Inlet and Exhaust Manifold Assembly . . . . . 77
Attachments and Accessories . . . . . 78

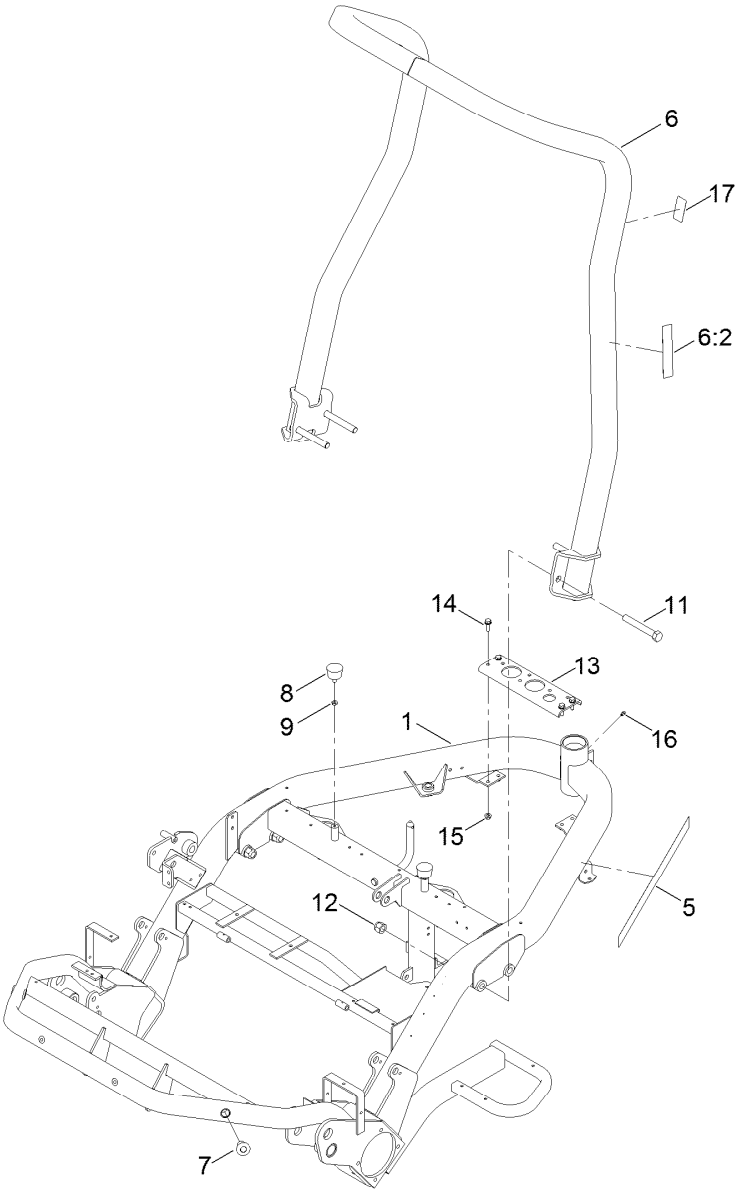


# Roll-Over Protection System Assembly

| *Ref.* | *Part Number* | *Qty.* | *Description* |
|---|---|---|---|
| 1 | 127-6145-01 | 1 | Frame |
| 5 | 99-1493 | 1 | Decal |
| 6 | 125-5158 | 1 | ROPS ASM |
| 6:2 | 115-8226 | 1 | Decal-ROPS |
| 7 | 83-1700 | 3 | Bushing-Flange |
| 8 | 68-3270 | 2 | Bumper-Rubber |
| 9 | 3218-2 | 2 | Nut-Hex Jam |
| 11 | 327-23 | 4 | Screw-HH |
| 12 | 3296-53 | 4 | Nut-Lock, NI |
| 13 | 93-2020-01 | 1 | Bracket-Support |
| 14 | 3234-29 | 4 | Screw-HHF |
| 15 | 104-8300 | 4 | Nut-HF, NI |
| 16 | 302-5 | 1 | Fitting-Grease |
| 17 | 133-2311 | 1 | Decal-ROPS |

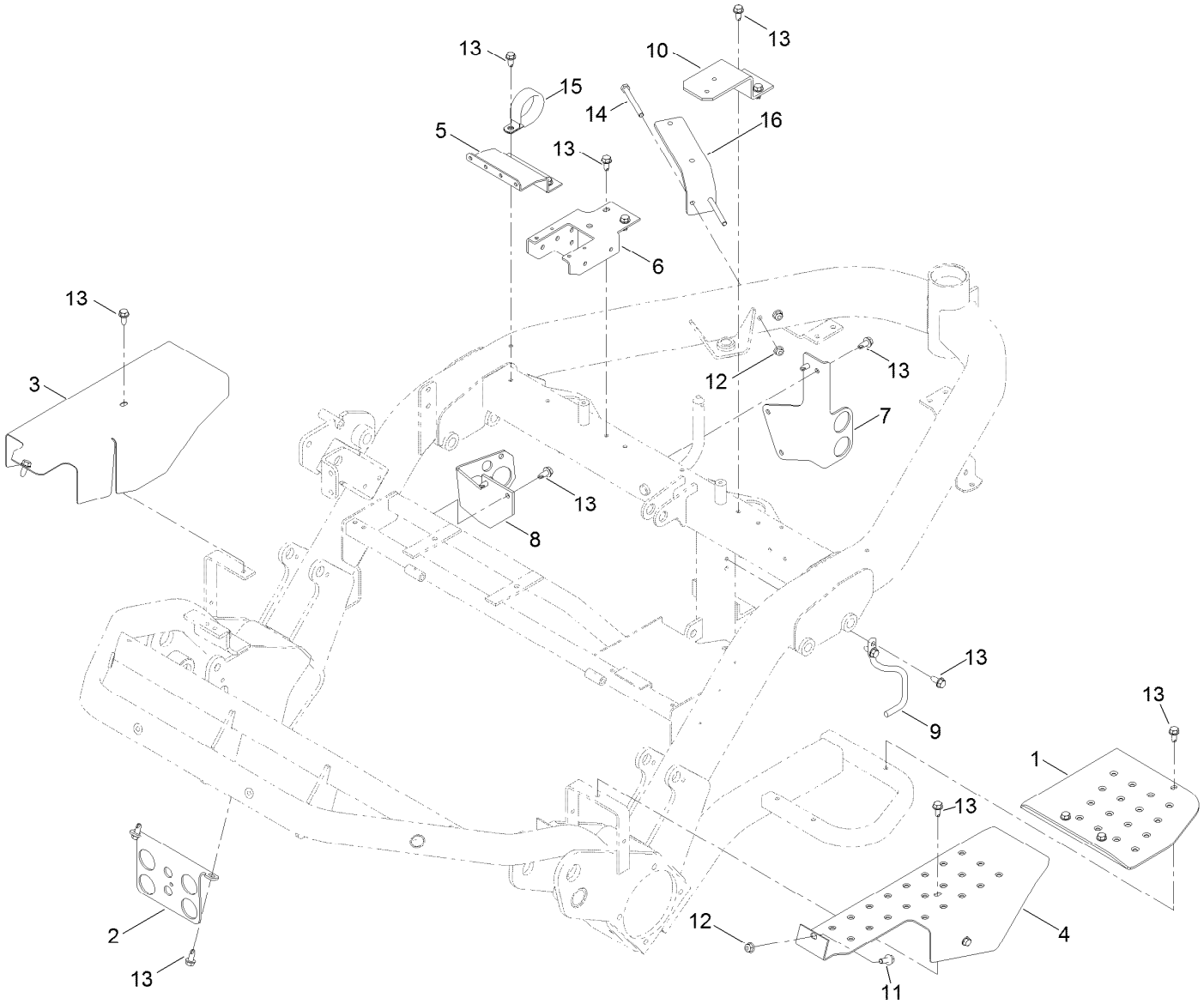


# Frame Assembly

| Ref. | Part Number | Qty. | Description |
|---|---|---|---|
| 1 | 130-0104-01 | 1 | Step |
| 2 | 121-2636-01 | 1 | Bracket-Bulkhead |
| 3 | 93-2072-01 | 1 | Shield-Wheel, RH |
| 4 | 93-2073-01 | 1 | Shield-Wheel, LH |
| 5 | 93-2169-01 | 1 | Bracket-Relay |
| 6 | 119-3537-01 | 1 | Bracket-Fuse Block |
| 7 | 99-4222-03 | 1 | Bracket-Hose |
| 8 | 94-1316 | 1 | Bracket-Bulkhead |

| Ref. | Part Number | Qty. | Description |
|---|---|---|---|
| 9 | 130-6527 | 1 | Retainer-Hose |
| 10 | 131-8780-03 | 1 | Bracket-Oil Filter |
| 11 | 3234-47 | 1 | Screw-HHF |
| 12 | 104-8300 | 3 | Nut-HF, NI |
| 13 | 32104-32 | 22 | Screw-HWH |
| 14 | 322-20 | 2 | Screw-HH |
| 15 | 115-9469 | 1 | Clamp-R |
| 16 | 99-4203-03 | 1 | Bracket-Cleaner, Air |

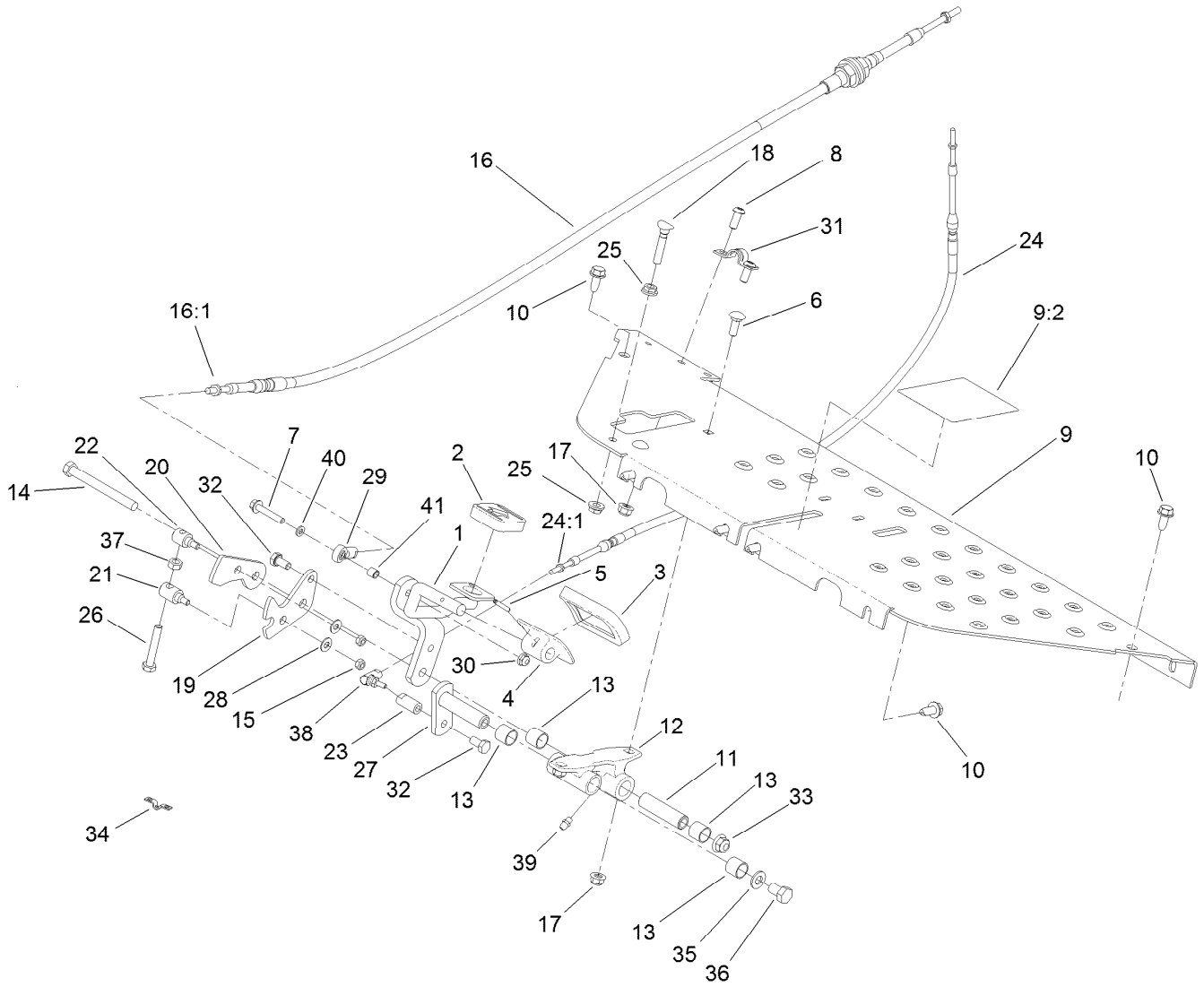


# Traction Control Assembly

| Ref. | Part Number | Qty. | Description |
|---|---|---|---|
| 1 | 93-2085-01 | 1 | Rod ASM |
| 2 | 74-9110 | 1 | Pad-Pedal, Reverse |
| 3 | 74-9100 | 1 | Pad-Pedal, Forward |
| 4 | 117-9507 | 1 | Pedal-Accelerator |
| 5 | 32121-45 | 1 | Pin-Spring |
| 6 | 3230-16 | 2 | Screw-CARR |
| 7 | 94-5781 | 1 | Screw-HHF |
| 8 | 3274-55 | 2 | Screw-HSBH |
| 9 | 136-8570 | 1 | Plate-Floor |
| 9:2 | 93-8062 | 1 | Decal-Brake, Parking |
| 10 | 32104-32 | 8 | Screw-HWH |
| 11 | 94-1371 | 1 | Spacer |
| 12 | 115-6695 | 1 | Pedal-Pivot |
| 13 | 256-311 | 4 | Bushing-Split |
| 14 | 323-42 | 1 | Screw-HH |
| 15 | 33023-00 | 2 | Nut-Lock |
| 16 | 107-2550 | 1 | Cable-Control, Traction |
| 16:1 | 3220-1 | 2 | Nut-Jam |
| 17 | 104-8300 | 4 | Nut-HF, NI |
| 18 | 17-9420 | 1 | Screw-Handle |
| 19 | 94-1373 | 1 | Bracket-Lock |

| Ref. | Part Number | Qty. | Description |
|---|---|---|---|
| 20 | 94-1372 | 1 | Bracket-Mow |
| 21 | 94-1375 | 1 | Trunnion-Bracket, Lock |
| 22 | 94-1374 | 1 | Trunnion-Bracket, Mow |
| 23 | 94-1386 | 1 | Shaft-Pedal |
| 24 | 94-1304 | 1 | Cable-Lock, Neutral |
| 24:1 | 3219-14 | 2 | Nut-Hex |
| 25 | 32128-20 | 2 | Nut-HF |
| 26 | 94-3489 | 1 | Screw-HH |
| 27 | 94-1300 | 1 | Lock-Neutral |
| 28 | 3256-1 | 2 | Washer-Flat |
| 29 | 2411-41 | 1 | Rod End-Ball Joint |
| 30 | 104-7201 | 1 | Nut-HF, NI |
| 31 | 93-2092 | 1 | Clamp-Cable |
| 32 | 33114-016 | 2 | Screw-HH |
| 33 | 104-8301 | 1 | Nut-HF, NI |
| 34 | 93-2279 | 1 | Clamp-Cable |
| 35 | 3256-24 | 1 | Washer-Flat |
| 36 | 33115-016 | 1 | Screw-HH |
| 37 | 33014-00 | 1 | Nut-Hex |
| 38 | 2411-38 | 1 | Joint-Ball |
| 39 | 302-5 | 1 | Fitting-Grease |

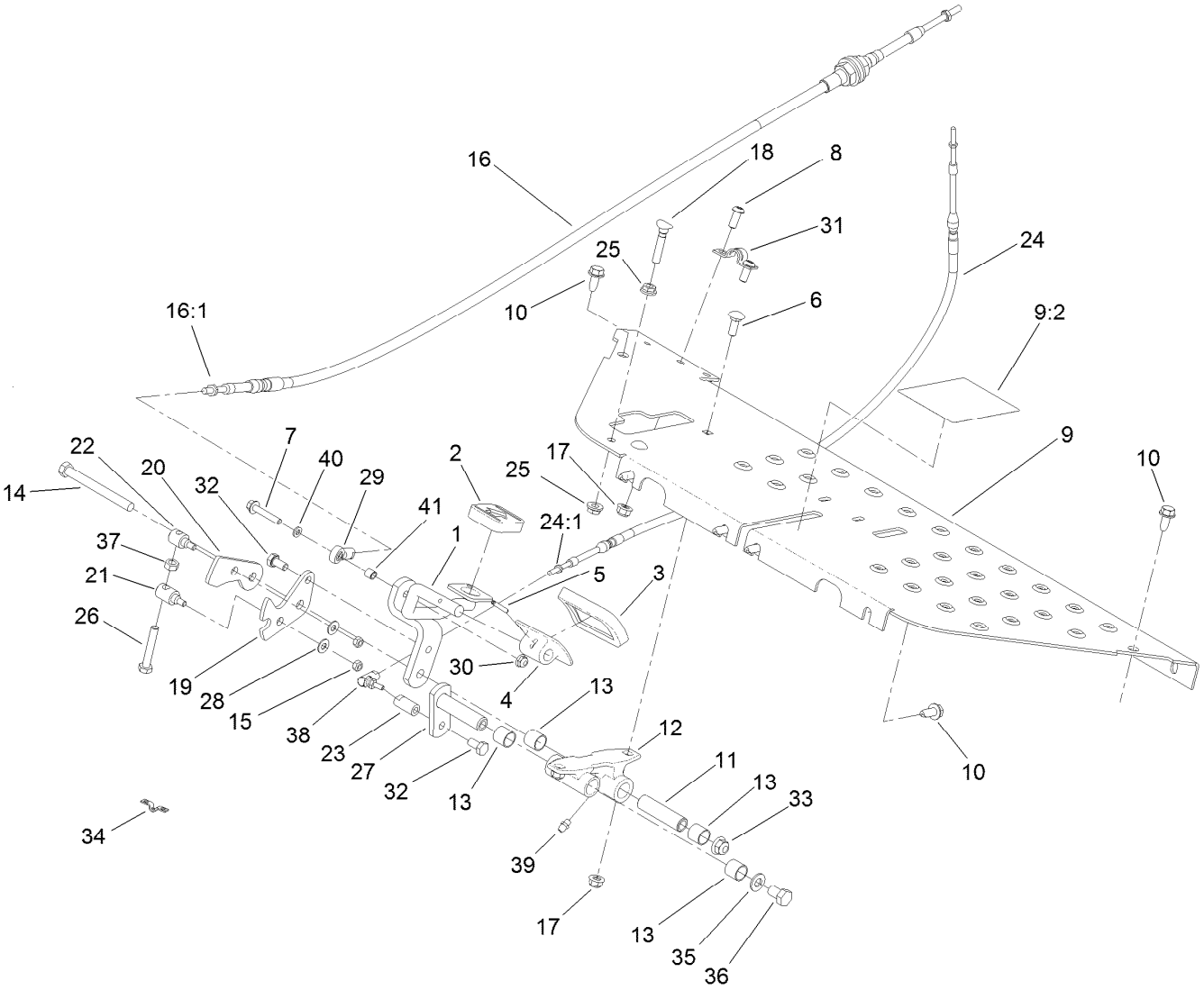


# Traction Control Assembly (continued)

| Ref. | Part Number | Qty. | Description |
|---|---|---|---|
| 40 | 33093-00 | 1 | Washer-Flat |
| 41 | 99-3545 | 1 | Spacer |

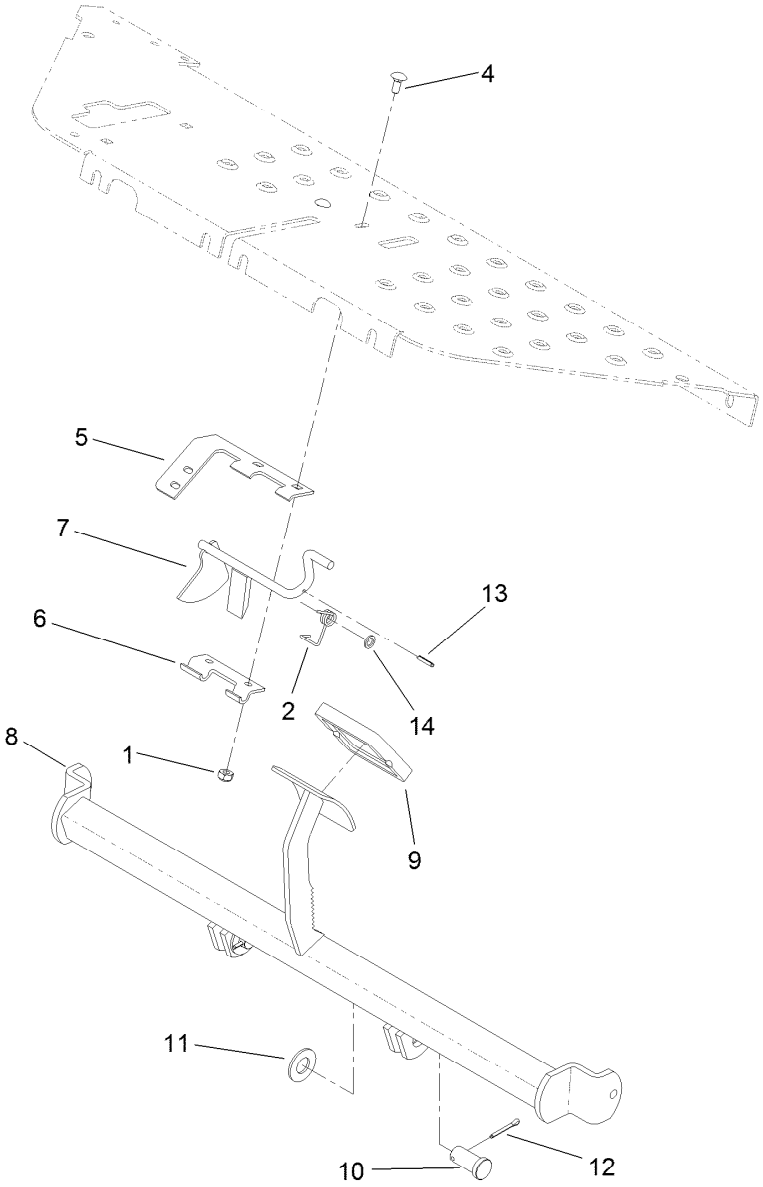


# Brake Pedal Assembly

| Ref. | Part Number | Qty. | Description |
|---|---|---|---|
| 1 | 3296-16 | 2 | Nut-Lock, NI |
| 2 | 104-7704 | 1 | Spring-Latch, Brake |
| 4 | 3229-11 | 2 | Screw-CARR |
| 5 | 132-3807 | 1 | Bracket-Switch |
| 6 | 104-7703 | 1 | Hinge-Lower |
| 7 | 104-2094 | 1 | Brake-Latch |
| 8 | 93-2075-01 | 1 | Brake Pedal ASM |
| 9 | 93-7629 | 1 | Pad-Foot, Brake |
| 10 | 283-87 | 2 | Pin-Clevis |
| 11 | 3256-27 | 2 | Washer-Flat |
| 12 | 3272-11 | 2 | Pin-Cotter |
| 13 | 32121-50 | 1 | Pin-Spring |
| 14 | 75-5470 | 1 | Spacer-Bearing |

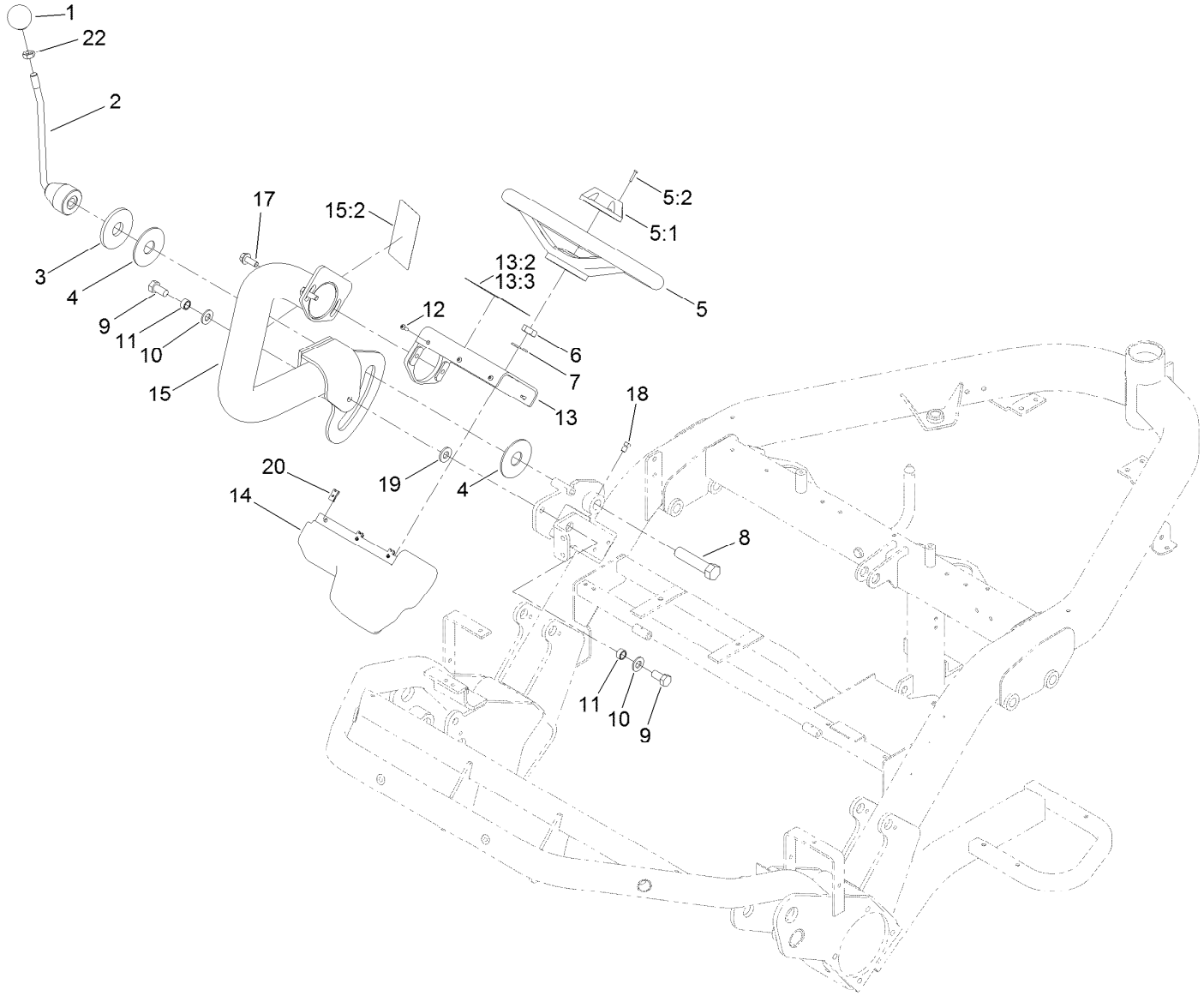


# Steering Arm Assembly

| Ref. | Part Number | Qty. | Description |
|---|---|---|---|
| 1 | 233-48 | 1 | Knob |
| 2 | 93-2400-03 | 1 | Lockup Handle ASM |
| 3 | 83-0760 | 1 | Spacer-Plate, Lockup |
| 4 | 83-0740 | 2 | Disc-Friction |
| 5 | 75-0560 | 1 | Steering Wheel ASM |
| 5:1 | 32144-21 | 1 | Screw |
| 5:2 | 68-5140 | 1 | Cap-Wheel, Steering |
| 6 | 3296-33 | 1 | Nut-Lock, NI |
| 7 | 3256-27 | 1 | Washer-Flat |
| 8 | 93-2199 | 1 | Screw-HH, RH |
| 9 | 325-4 | 2 | Screw-HH |
| 10 | 3256-26 | 2 | Washer-Flat |
| 11 | 47-2890 | 2 | Bushing |

| Ref. | Part Number | Qty. | Description |
|---|---|---|---|
| 12 | 3274-39 | 6 | Screw-HSBH |
| 13 | 136-8571 | 1 | Mount-Steering |
| 13:2 | 136-8506 | 1 | Decal-Danger |
| 13:3 | 136-8505 | 1 | Decal-Danger, CE |
| 14 | 119-9300 | 1 | Cover-Valve, Steering |
| 15 | 136-8450 | 1 | Arm-Steering |
| 15:2 | 93-8068 | 1 | Decal-Arm, Steering |
| 17 | 3234-42 | 2 | Screw-HHF |
| 18 | 3242-2 | 1 | Screw-SQH |
| 19 | 65-6390 | 1 | Washer-Thrust, Plain |
| 20 | 3290-277 | 6 | Nut-Speed |
| 22 | 3218-5 | 1 | Nut-Jam |

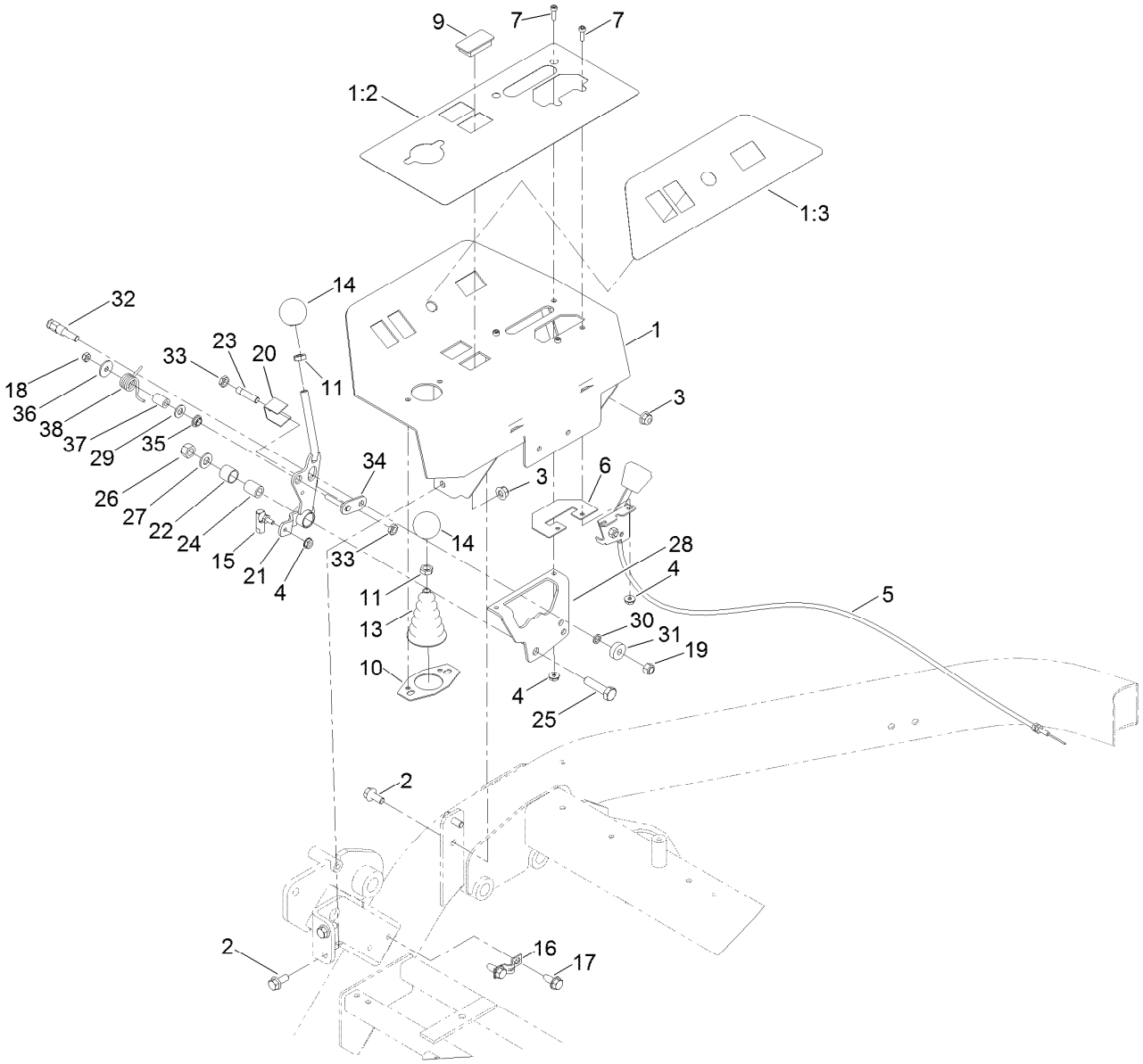


# Operator Platform Assembly

| Ref. | Part Number | Qty. | Description |
|---|---|---|---|
| 1 | 136-8572 | 1 | Console |
| 1:2 | 127-6115 | 1 | Decal-Panel, Instrument |
| 1:3 | 127-6114 | 1 | Decal-Panel, Instrument |
| 2 | 3234-47 | 4 | Screw-HHF |
| 3 | 104-8300 | 4 | Nut-HF, NI |
| 4 | 32149-8 | 5 | Nut-Keps |
| 5 | 120-5261 | 1 | Control-Throttle |
| 6 | 112-9179 | 1 | Plate-Cover |
| 7 | 3273-26 | 4 | Screw-HSH |
| 9 | 99-7420 | 1 | Plug-Hole |
| 10 | 112-9181 | 1 | Plate-Boot |
| 11 | 3218-3 | 2 | Nut-Jam |
| 13 | 93-5961 | 1 | Boot-Lever |
| 14 | 233-42 | 2 | Knob |
| 15 | 2411-38 | 1 | Joint-Ball |
| 16 | 93-2279 | 1 | Clamp-Cable |
| 17 | 32104-32 | 2 | Screw-HWH |
| 18 | 33023-00 | 1 | Nut-Lock |
| 19 | 33024-00 | 1 | Nut-Lock, NI |

| Ref. | Part Number | Qty. | Description |
|---|---|---|---|
| 20 | 106-6356 | 1 | Shield-Switch |
| 21 | 94-9611 | 1 | Handle |
| 22 | 256-311 | 1 | Bushing-Split |
| 23 | 120-5348 | 1 | Actuator-Switch |
| 24 | 94-1378 | 1 | Tube-Pivot, Handle |
| 25 | 33115-040 | 1 | Screw-HH |
| 26 | 33025-00 | 1 | Nut-Lock, NI |
| 27 | 3256-24 | 1 | Washer-Flat |
| 28 | 94-6398 | 1 | Bracket-Traction |
| 29 | 3256-23 | 1 | Washer-Plain |
| 30 | 75-5470 | 1 | Spacer-Bearing |
| 31 | 251-259 | 1 | Bearing-Ball |
| 32 | 94-9617 | 1 | Pin-Spring |
| 33 | 117-4059 | 2 | Nut-Hex |
| 34 | 120-3198 | 1 | Roller-Pivot |
| 35 | 94-9619 | 1 | Bushing |
| 36 | 3256-67 | 1 | Washer |
| 37 | 94-9618 | 1 | Spacer-Spring |
| 38 | 94-9620 | 1 | Spring-Torsion |

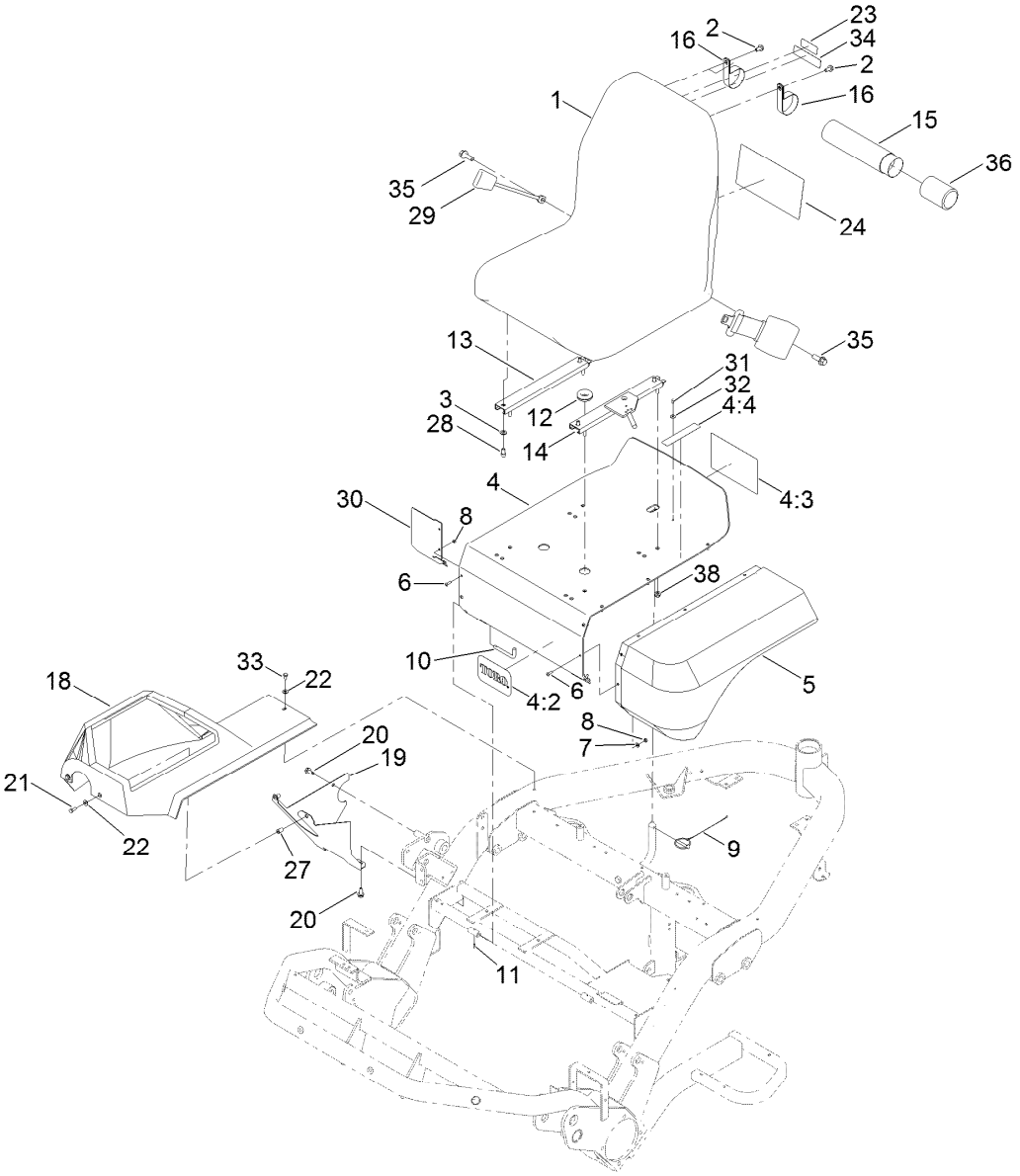


# Seat Assembly

| Ref. | Part Number | Qty. | Description |
|---|---|---|---|
| 1 | 104-4620 | 1 | Seat |
| 2 | 3234-7 | 2 | Screw-HHF |
| 3 | 3256-23 | 4 | Washer-Plain |
| 4 | 136-8573 | 1 | Seat Support ASM |
| 4:2 | 94-2579 | 1 | Decal |
| 4:3 | 115-8156 | 1 | Decal-Speed, Clip |
| 4:4 | 93-6689 | 1 | Decal-No Riders |
| 5 | 93-2128 | 1 | Panel-Base, Seat |
| 6 | 3274-39 | 9 | Screw-HSBH |
| 7 | 3256-77 | 6 | Washer-Flat |
| 8 | 3296-12 | 9 | Nut-Lock, NI |
| 9 | 77-3780 | 1 | Pin ASM-Lynch |
| 10 | 93-2422 | 2 | Rod-Pivot, Seat |
| 11 | 32121-7 | 2 | Pin-Roll, Slotted |
| 12 | 237-100 | 1 | Grommet |
| 13 | 92-8990 | 1 | Adjuster-Seat, Non-Locking |
| 14 | 92-8991 | 1 | Adjuster (W/Latch) |
| 15 | 104-7050 | 1 | Tube-Manual |
| 16 | 2412-133 | 2 | Clamp-R |
| 18 | 99-4208 | 1 | Shroud-Console |
| 19 | 94-4547-03 | 1 | Panel-Lower, RH |

| Ref. | Part Number | Qty. | Description |
|---|---|---|---|
| 20 | 32104-32 | 2 | Screw-HWH |
| 21 | 33113-016 | 2 | Screw-HH |
| 22 | 3256-1 | 3 | Washer-Flat |
| 23 | 93-6686 | 1 | Decal-Oil, HYD |
| 24 | 121-9500 | 1 | Decal-Service, English |
| 24 | 121-9501 | 1 | Decal-Service, Spanish |
| 24 | 121-9502 | 1 | Decal-Service, French |
| 24 | 121-9503 | 1 | Decal-Service, German |
| 24 | 121-9504 | 1 | Decal-Service, Swedish |
| 24 | 121-9505 | 1 | Decal-Service, Italian |
| 24 | 121-9506 | 1 | Decal-Service, Portuguese |
| 24 | 121-9507 | 1 | Decal-Service, Norwegian |
| 24 | 121-9508 | 1 | Decal-Service, Finnish |
| 24 | 121-9509 | 1 | Decal-Service, Danish |
| 24 | 121-9510 | 1 | Decal-Service, Dutch |
| 24 | 121-9511 | 1 | Decal-Service, Japanese |
| 27 | 93-5447 | 2 | Nut-Clinch |
| 28 | 3274-12 | 4 | Screw-HSH |
| 29 | 100-4928 | 1 | Belt-Seat |
| 30 | 94-4546-03 | 1 | Panel-Extension |
| 31 | 3290-282 | 1 | Rivet-Blind |

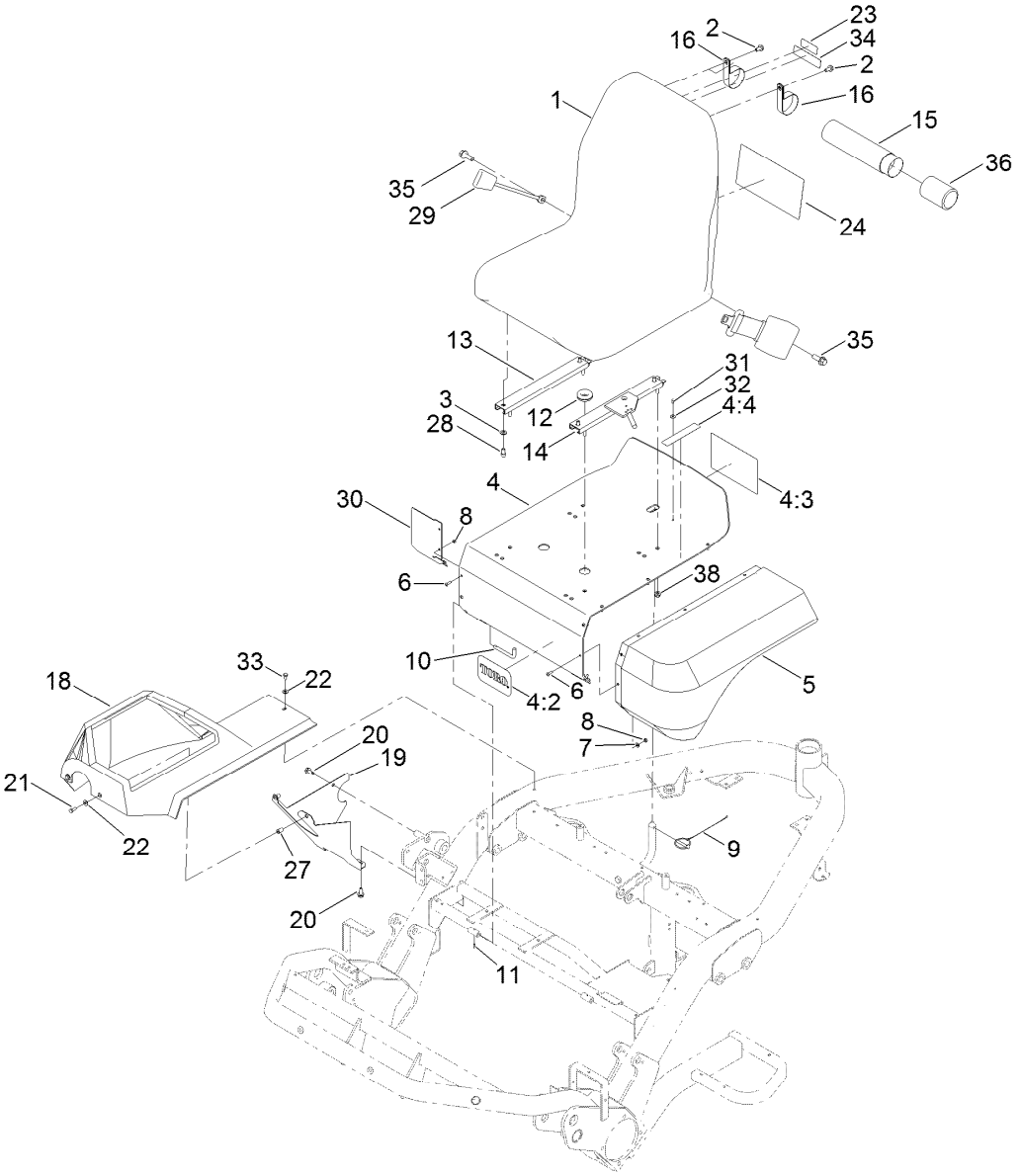


# Seat Assembly (continued)

| Ref. | Part Number | Qty. | Description |
|---|---|---|---|
| 32 | 3256-49 | 1 | Washer-Plain |
| 33 | 33113-012 | 1 | Screw-HH |
| 34 | 133-8062 | 1 | Decal-Arrestor, Spark |
| 35 | 117-9035 | 2 | Screw-HHF |
| 36 | 104-7048 | 1 | Cap-Housing |
| 38 | 104-8300 | 4 | Nut-HF, NI |

# Engine Assembly

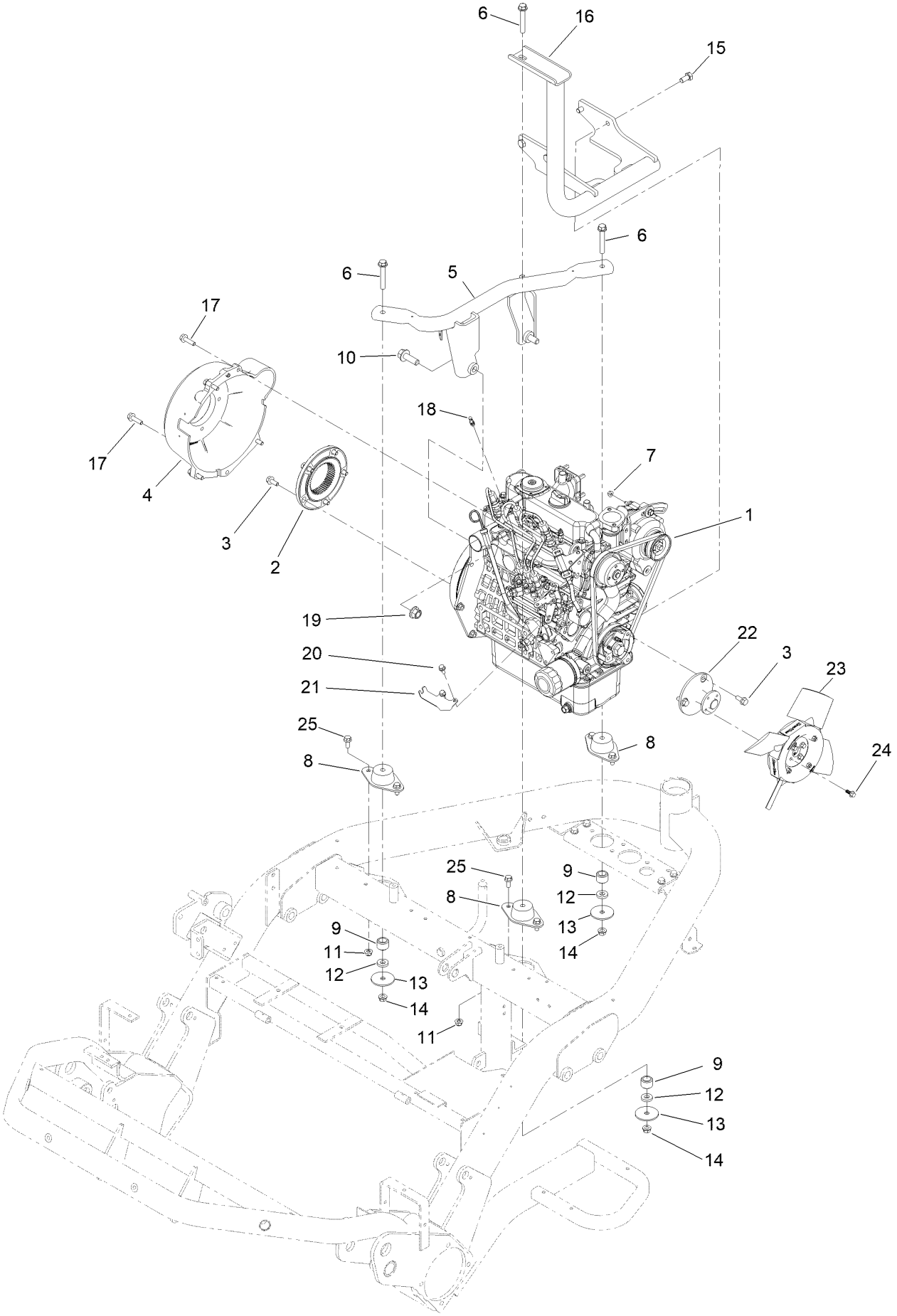

# Engine Assembly (continued)

| Ref. | Part Number | Qty. | Description |
|---|---|---|---|
| 1 | 138-6903 | 1 | Engine-Kubota, D902 |
| 2 | 115-8727 | 1 | Flange-Coupling |
| 3 | 33104-020 | 8 | Screw-HHF |
| 4 | 132-6994 | 1 | Housing-Bell |
| 5 | 120-5313-03 | 1 | Mount-Engine |
| 6 | 323-11 | 3 | Screw-HH |
| 7 | 33003-00 | 1 | Nut-HF |
| 8 | 121-9076 | 3 | Mount-Engine |
| 9 | 94-4538 | 3 | Spacer-Mount |
| 10 | 100-6116 | 2 | Screw-HHF |
| 11 | 104-8300 | 6 | Nut-HF, NI |
| 12 | 66-6480 | 3 | Washer |
| 13 | 83-1040 | 3 | Washer-Flat |
| 14 | 3290-357 | 3 | Nut-HSF |
| 15 | 63-7790 | 4 | Screw-Cap |
| 16 | 133-2346-03 | 1 | Support-Engine |
| 17 | 33104-030 | 4 | Screw-HHF |
| 18 | 108-5928 | 1 | Swivel-Stop, Cable |
| 19 | 99-5107 | 2 | Nut-Lock |
| 20 | 33103-020 | 2 | Screw-HHF |
| 21 | 120-5316 | 1 | Bracket-Support, Throttle |
| 22 | 119-4421 | 1 | Adaptor-Fan |
| 23 | 120-5287 | 1 | Fan-35 DEG |
| 24 | 99-6810 | 4 | Screw-HHF |
| 25 | 3234-47 | 6 | Screw-HHF |

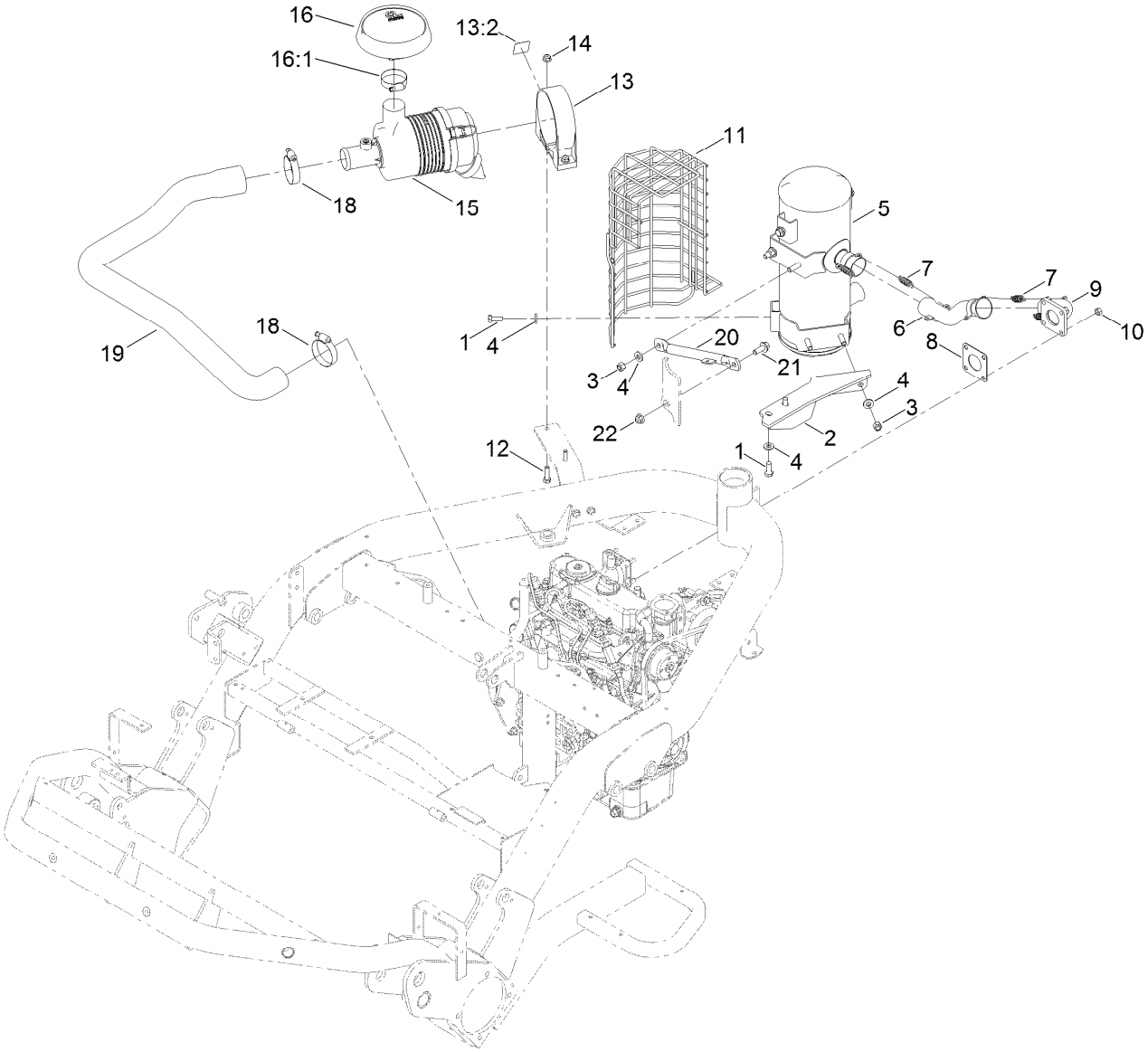


# Intake and Exhaust Assembly

| Ref. | Part Number | Qty. | Description |
|---|---|---|---|
| 1 | 323-5 | 6 | Screw-HH |
| 2 | 119-4474 | 1 | Bracket-Muffler |
| 3 | 32152-2 | 4 | Nut-Lock, Cone |
| 4 | 100-4852 | 10 | Washer-Hardened |
| 5 | 120-1950 | 1 | Muffler |
| 6 | 114-8013 | 1 | Pipe-Exhaust |
| 7 | 104-6478 | 4 | Spring-Extension |
| 8 | 99-8343 | 1 | Gasket-Muffler |
| 9 | 114-8009 | 1 | Plate-Exhaust |
| 10 | 33014-00 | 4 | Nut-Hex |
| 11 | 115-8718-03 | 1 | Shield-Muffler |
| 12 | 322-16 | 2 | Screw-HH |

| Ref. | Part Number | Qty. | Description |
|---|---|---|---|
| 13 | 136-8574 | 1 | Bracket-Air Cleaner |
| 13:2 | 115-8155 | 1 | Decal-Warning |
| 14 | 104-8300 | 2 | Nut-HF, NI |
| 15 | 95-5805 | 1 | Air Cleaner ASM |
| 16 | 120-4848 | 1 | Hood-Inlet, Air |
| 16:1 | 2412-130 | 1 | Clamp-Hose |
| 18 | 2412-92 | 2 | Clamp-Hose |
| 19 | 119-3536 | 1 | Hose-Air Cleaner |
| 20 | 120-5318-03 | 1 | Support-Exhaust |
| 21 | 3234-42 | 1 | Screw-HHF |
| 22 | 104-8301 | 1 | Nut-HF, NI |

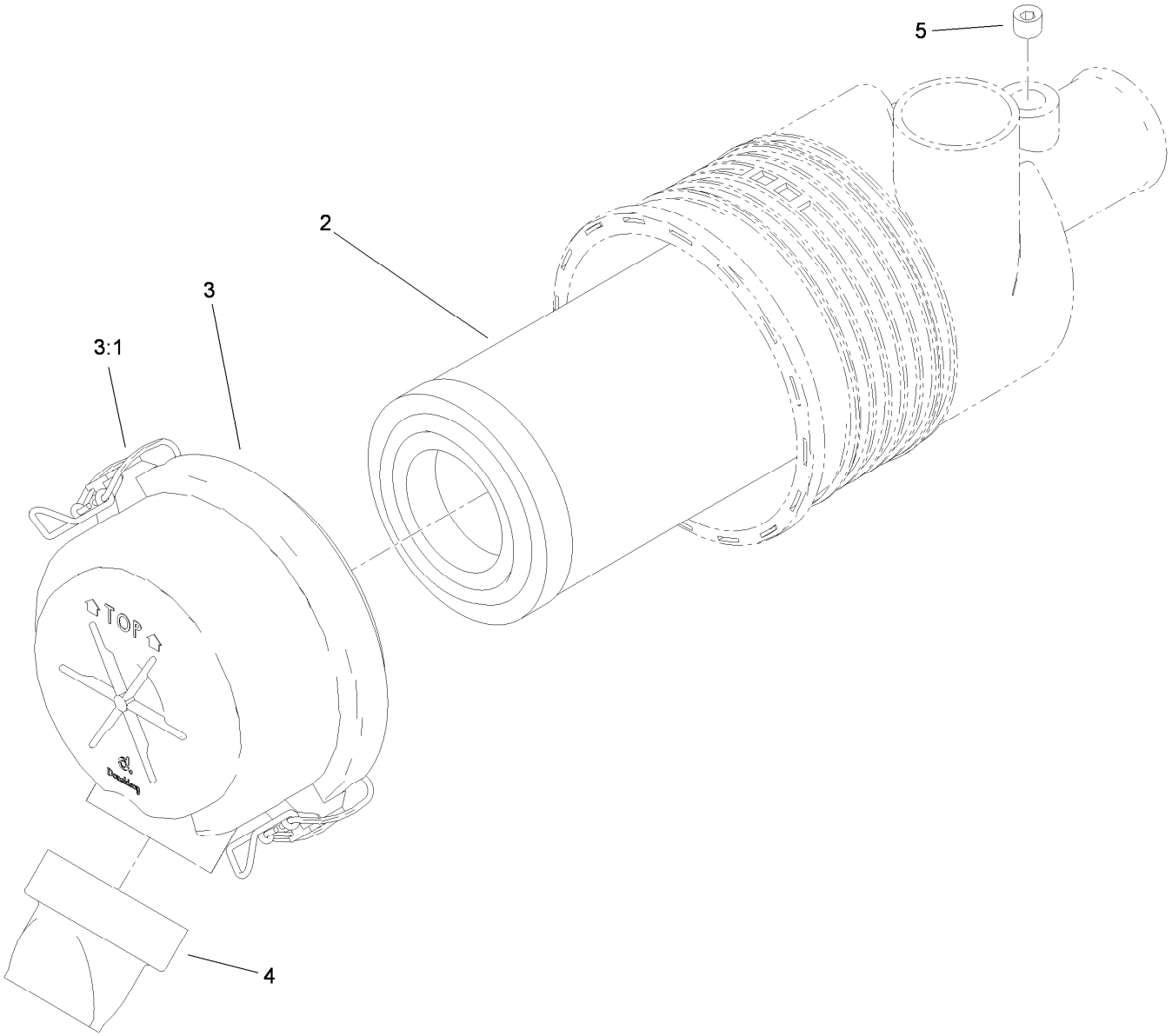


# Air Cleaner Assembly No. 95-5805

| *Ref.* | *Part Number* | *Qty.* | *Description* |
|---|---|---|---|
| 2 | 108-3811 | 1 | Filter-Air |
| 3 | 94-3652 | 1 | Cover ASM |
| 3:1 | 1-643283 | 2 | Latch-Cleaner, Air |
| 4 | 87-9400 | 1 | Valve-Vacuator |
| 5 | 285-17 | 1 | Plug-Pipe |

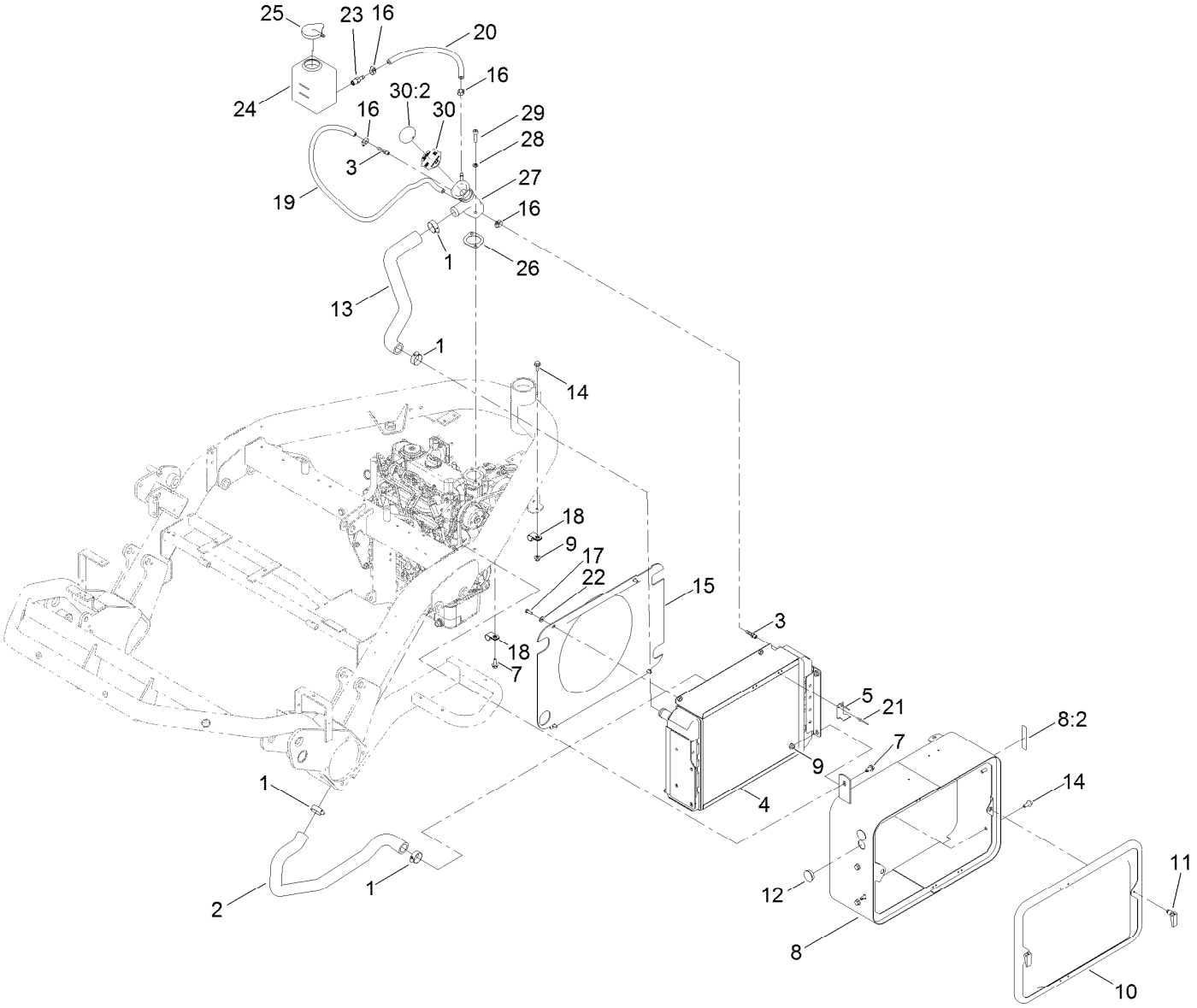


# Radiator Assembly

| Ref. | Part Number | Qty. | Description |
|---|---|---|---|
| 1 | 2412-34 | 4 | Clamp-Hose |
| 2 | 119-3554 | 1 | Hose-Radiator, Lower |
| 3 | 304-73 | 2 | Fitting-Straight |
| 4 | 119-3555 | 1 | Radiator |
| 5 | 104-7736 | 1 | Bracket-Cooler, Upper |
| 7 | 32104-32 | 3 | Screw-HWH |
| 8 | 136-8575 | 1 | Radiator-Support |
| 8:2 | 93-6681 | 1 | Decal-Warning, Fan |
| 9 | 104-8300 | 5 | Nut-HF, NI |
| 10 | 100-3172-03 | 1 | Screen ASM |
| 11 | 74-5950 | 2 | Latch-Swell |
| 12 | 94-4528 | 2 | Plug |
| 13 | 119-3556 | 1 | Hose-Radiator, Upper |
| 14 | 3234-47 | 5 | Screw-HHF |
| 15 | 119-3571 | 1 | Shroud-Fan |
| 16 | 2412-108 | 4 | Clamp-Worm |

| Ref. | Part Number | Qty. | Description |
|---|---|---|---|
| 17 | 33113-016 | 4 | Screw-HH |
| 18 | 2412-41 | 2 | Clamp-R |
| 19 | 109-0286 | 1 | Hose-Fuel |
| 20 | 110-4101 | 1 | Hose-Fuel |
| 21 | 130-6520 | 2 | Rivet-Pop |
| 22 | 3256-22 | 4 | Washer-Flat |
| 23 | 353-783 | 1 | Fitting-STR |
| 24 | 120-5260 | 1 | Tank-Overflow |
| 25 | 1-643164 | 1 | Cap-Tank, Overflow |
| 26 | 105-3748 | 1 | Gasket-Thermostat |
| 27 | 119-3532 | 1 | Blade (Discontinued) |
| 28 | 3253-4 | 2 | Washer-Lock |
| 29 | 94-3559 | 2 | Screw-HSH |
| 30 | 136-8582 | 1 | Cap-Radiator |
| 30:2 | 106-5976 | 1 | Decal-Warning |

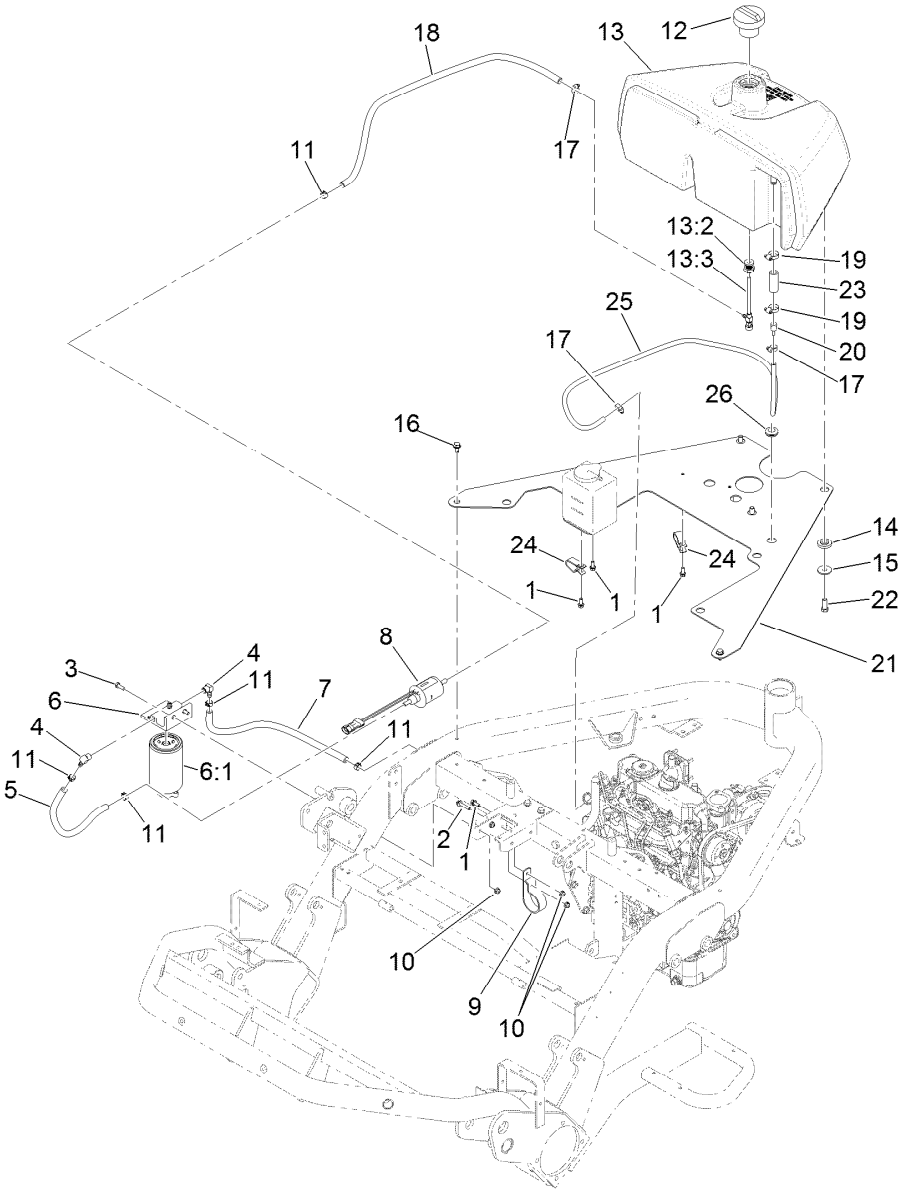


# Fuel System Assembly

| Ref. | Part Number | Qty. | Description |
|---|---|---|---|
| 1 | 3234-33 | 4 | Screw-HHF |
| 2 | 3234-21 | 1 | Screw-HHF |
| 3 | 321-4 | 2 | Screw-HH |
| 4 | 353-781 | 2 | Fitting-HYD, 90 |
| 5 | 106-1126 | 1 | Hose-Fuel |
| 6 | 110-9044 | 1 | Separator-Filter |
| 6:1 | 110-9049 | 1 | Filter-Spin On, Fuel/Water |
| 7 | 114-4028 | 1 | Hose-Fuel |
| 8 | 110-8806 | 1 | Pump-Fuel |
| 9 | 110-8817 | 1 | Bracket-Pump, Fuel |
| 10 | 104-7201 | 4 | Nut-HF, NI |
| 11 | 92-2379 | 5 | Clamp-Hose |
| 12 | 115-5305 | 1 | Cap-Fuel |
| 13 | 132-3801 | 1 | Tank ASM |
| 13:2 | 114-4677 | 1 | Bulkhead ASM |

| Ref. | Part Number | Qty. | Description |
|---|---|---|---|
| 13:3 | 114-4679 | 1 | Fitting-Shut Off, Fuel |
| 14 | 240-11 | 3 | Bushing-Flange |
| 15 | 63-8410 | 3 | Washer |
| 16 | 32104-32 | 3 | Screw-HWH |
| 17 | 2412-108 | 3 | Clamp-Worm |
| 18 | 110-6186 | 1 | Hose-Fuel |
| 19 | 2412-36 | 2 | Clamp-Hose |
| 20 | 112-0212 | 1 | Fitting-Fuel |
| 21 | 119-3531-01 | 1 | Plate |
| 22 | 323-6 | 3 | Screw-HH |
| 23 | 106-1128 | 1 | Hose-Fuel |
| 24 | 92-5753 | 2 | Clamp-Hose |
| 25 | 117-6395 | 1 | Hose-Vent, Tank |
| 26 | 237-124 | 1 | Grommet |

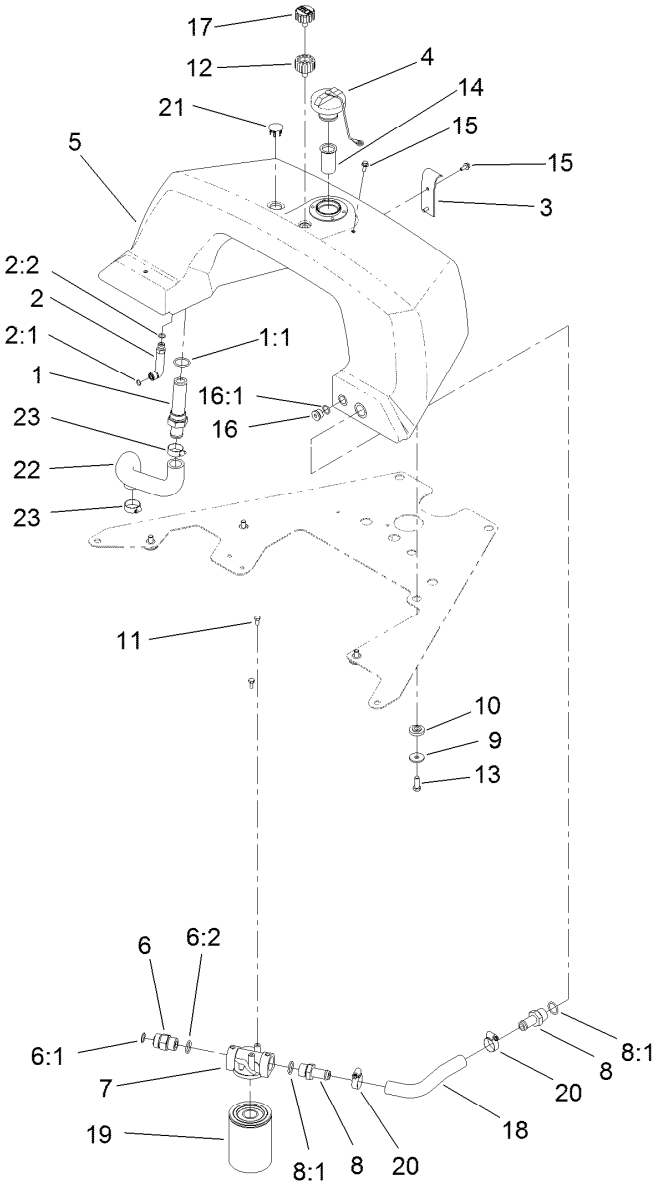


# Hydraulic Tank and Filter Assembly

| Ref. | Part Number | Qty. | Description |
|---|---|---|---|
| 1 | 112-0211 | 1 | Strainer Fitting ASM |
| 1:1 | 237-146 | 1 | O-Ring |
| 2 | 69-4320 | 1 | Fitting-HYD, 90 DEG |
| 2:1 | 237-22 | 1 | O-Ring |
| 2:2 | 237-42 | 1 | O-Ring |
| 3 | 93-2438 | 1 | Clamp-Tank, Fuel |
| 4 | 93-7160 | 1 | Cap-Oil, HYD |
| 5 | 132-3799 | 1 | Tank-Hydraulic |
| 6 | 340-9 | 1 | Fitting-STR |
| 6:1 | 237-58 | 1 | O-Ring |
| 6:2 | 237-81 | 1 | O-Ring |
| 7 | 92-5821 | 1 | Head-Filter |
| 8 | 354-73 | 2 | Fitting |
| 8:1 | 237-81 | 1 | O-Ring |
| 9 | 63-8410 | 4 | Washer |

| Ref. | Part Number | Qty. | Description |
|---|---|---|---|
| 10 | 240-11 | 4 | Bushing-Flange |
| 11 | 321-3 | 2 | Screw-HH |
| 12 | 92-8020 | 1 | Adapter-Breather |
| 13 | 323-6 | 4 | Screw-HH |
| 14 | 93-2275 | 1 | Screen-Filler |
| 15 | 33103-016 | 3 | Screw-HHF |
| 16 | 353-988 | 1 | Plug-Hex |
| 16:1 | 237-79 | 1 | O-Ring |
| 17 | 68-6150 | 1 | Breather |
| 18 | 94-9607 | 1 | Hose-Return |
| 19 | 107-9531 | 1 | Filter-Oil, HYD |
| 20 | 2412-129 | 2 | Clamp-Hose |
| 21 | 93-2437 | 1 | Plug-Serrated |
| 22 | 99-1905 | 1 | Hose-Inlet, Pump |
| 23 | 2412-34 | 2 | Clamp-Hose |

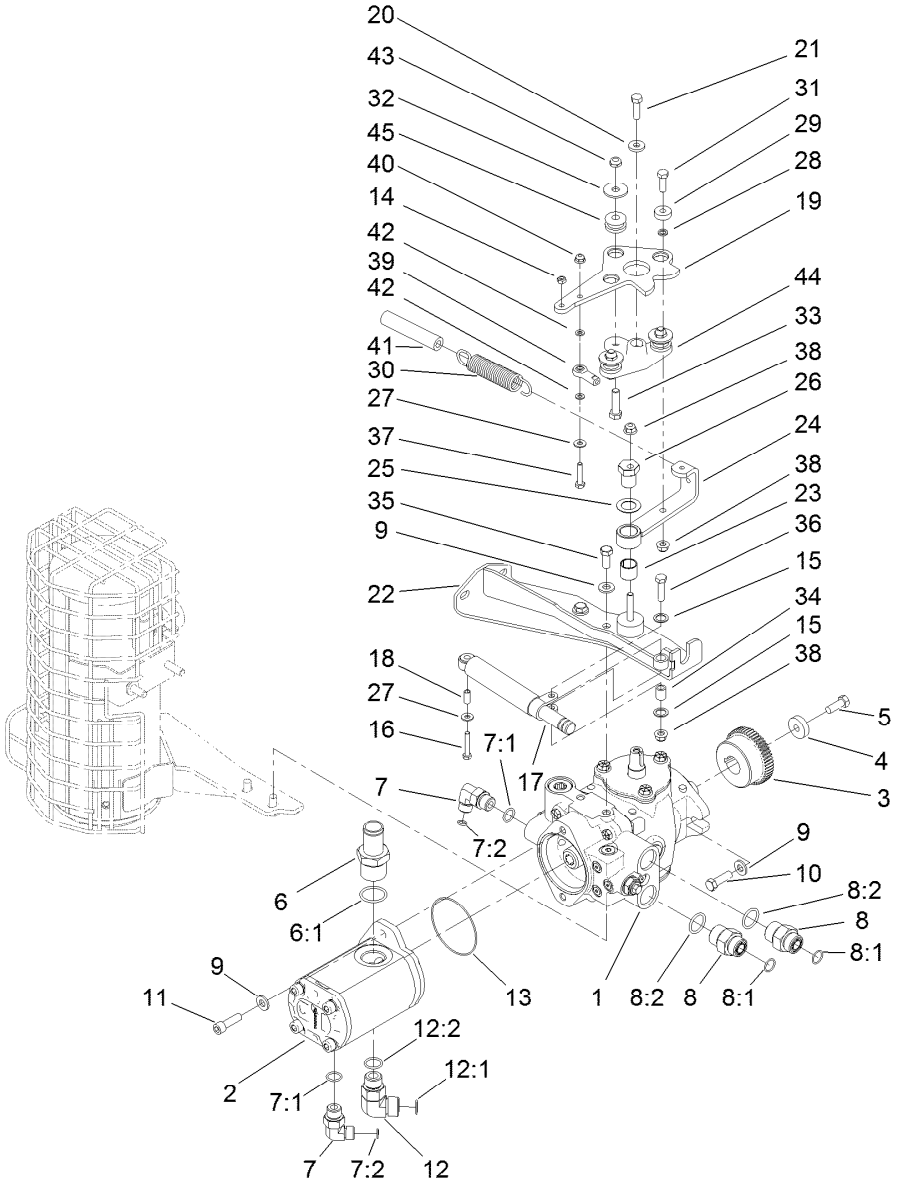


# Hydrostat and Gear Pump Drive Assembly

| Ref. | Part Number | Qty. | Description |
|---|---|---|---|
| 1 | 121-9557 | 1 | Pump-Hydro |
| 2 | 114-9956 | 1 | HYD Gear Pump ASM |
| 3 | 119-4418 | 1 | Coupling |
| 4 | 117-3657 | 1 | Spacer |
| 5 | 3211-4 | 1 | Screw-HH |
| 6 | 354-78 | 1 | Fitting-STR |
| 6:1 | 237-146 | 1 | O-Ring |
| 7 | 340-18 | 2 | Fitting-HYD, 90 DEG |
| 7:1 | 237-79 | 1 | O-Ring |
| 7:2 | 237-22 | 1 | O-Ring |
| 8 | 340-8 | 2 | Fitting-Straight |
| 8:1 | 237-65 | 1 | O-Ring |
| 8:2 | 237-81 | 1 | O-Ring |
| 9 | 100-4852 | 6 | Washer-Hardened |
| 10 | 323-7 | 2 | Screw-HH |
| 11 | 3274-1 | 2 | Screw-HSH |
| 12 | 340-17 | 1 | Fitting-Elbow, 90 DEG |
| 12:1 | 237-65 | 1 | O-Ring |
| 12:2 | 237-80 | 1 | O-Ring |
| 13 | 353-949 | 1 | O-Ring |
| 14 | 33023-00 | 1 | Nut-Lock |

| Ref. | Part Number | Qty. | Description |
|---|---|---|---|
| 15 | 94-8196 | 2 | Washer-Nylon |
| 16 | 33113-035 | 1 | Screw-HH |
| 17 | 76-8870 | 1 | Damper-Lever |
| 18 | 94-1312 | 1 | Spacer-Pivot |
| 19 | 94-3488-03 | 1 | Lever-Pump |
| 20 | 88-7200 | 1 | Washer-Flat |
| 21 | 3210-6 | 1 | Screw-HH |
| 22 | 120-5263-03 | 1 | Mount-Muffler, Upper |
| 23 | 94-9609 | 1 | Bushing-Straight |
| 24 | 94-4527 | 1 | Arm-Neutral |
| 25 | 3-6498 | 1 | Washer-Thrust |
| 26 | 93-2111 | 1 | Stud-Traction |
| 27 | 3256-22 | 2 | Washer-Flat |
| 28 | 75-5470 | 1 | Spacer-Bearing |
| 29 | 251-259 | 1 | Bearing-Ball |
| 30 | 99-4254 | 1 | Spring-Extension |
| 31 | 322-5 | 1 | Screw-HH |
| 32 | 93-8806 | 3 | Washer-Hardened |
| 33 | 323-29 | 3 | Screw-HH |
| 34 | 94-8197 | 1 | Tube-Pivot |
| 35 | 323-5 | 2 | Screw-HH |

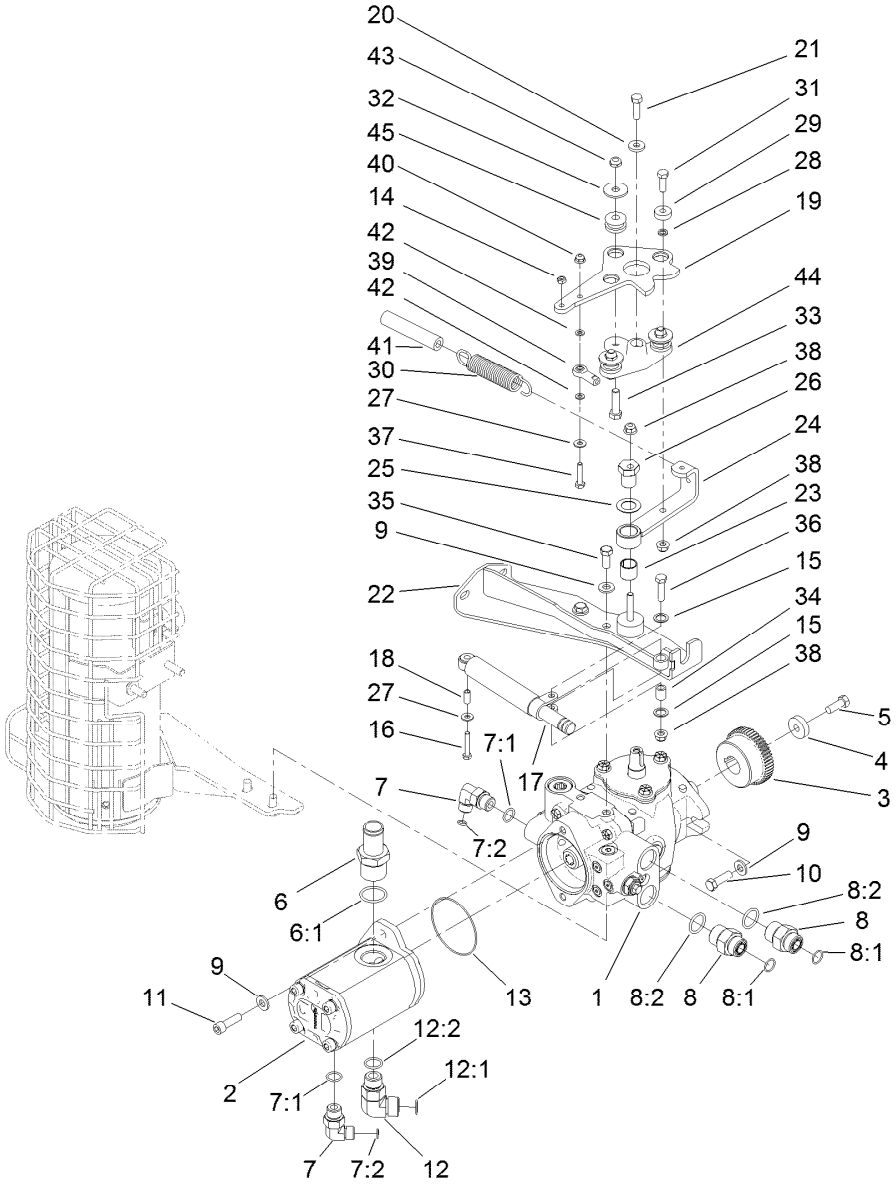


# Hydrostat and Gear Pump Drive Assembly (continued)

| Ref. | Part Number | Qty. | Description |
|---|---|---|---|
| 36 | 322-6 | 1 | Screw-HH |
| 37 | 321-8 | 1 | Screw-HH |
| 38 | 104-8300 | 3 | Nut-HF, NI |
| 39 | 2411-41 | 1 | Rod End-Ball Joint |
| 40 | 104-7201 | 1 | Nut-HF, NI |

| Ref. | Part Number | Qty. | Description |
|---|---|---|---|
| 41 | 99-4251 | 1 | Hose-Dampener |
| 42 | 33093-00 | 2 | Washer-Flat |
| 43 | 3296-59 | 3 | Nut-Lock, NI |
| 44 | 117-9500 | 1 | Plate-Pivot |
| 45 | 63-9750 | 3 | Mount |

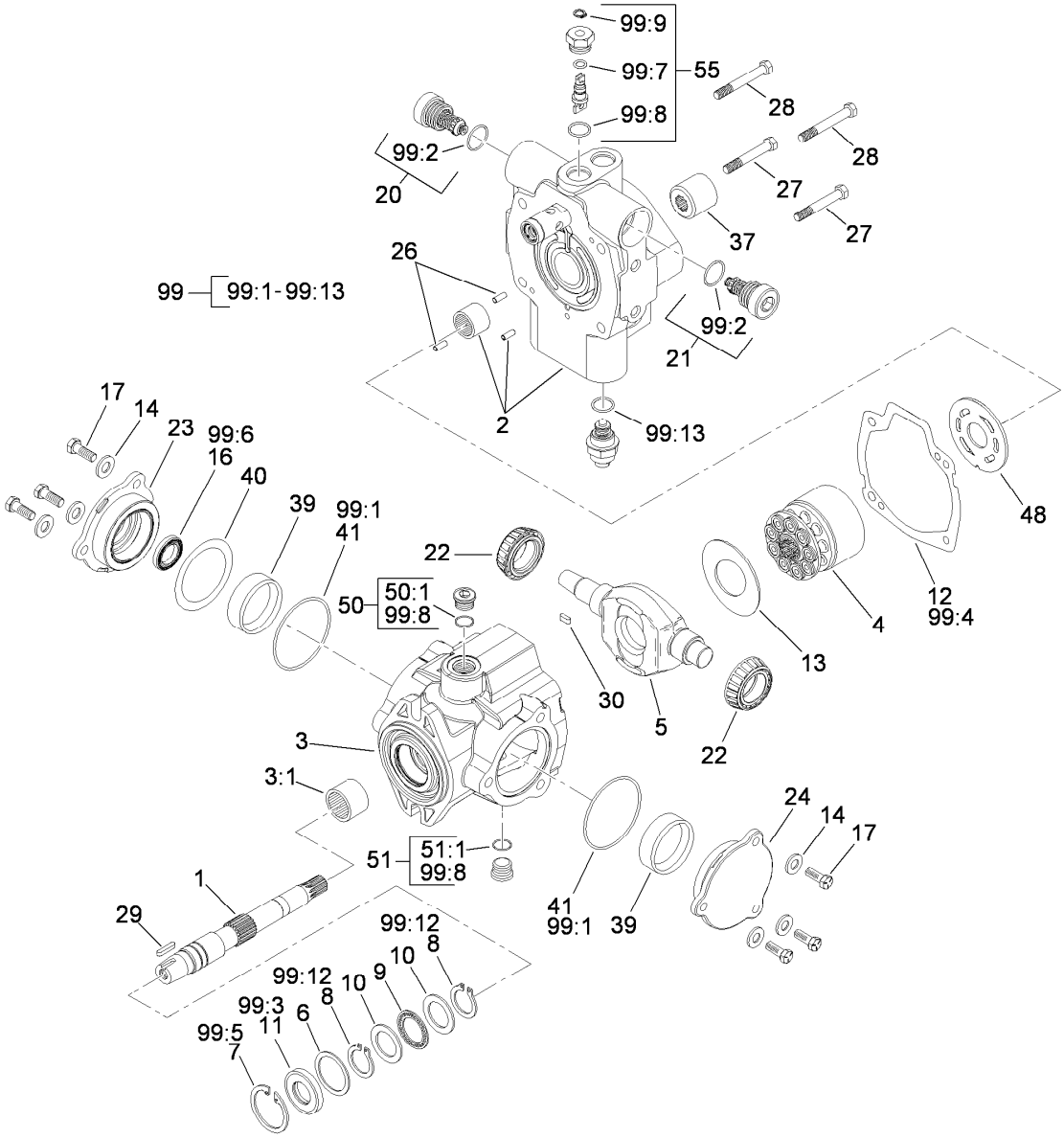


# Hydraulic Pump Assembly No. 121-9557

| Ref. | Part Number | Qty. | Description |
|---|---|---|---|
| 1 | 119-7148 | 1 | Shaft-Drive, Tapered |
| 2 | 121-9574 | 1 | Endcover ASM |
| 3 | 100-3176 | 1 | Housing ASM |
| 3:1 | 94-6363 | 1 | Bearing |
| 4 | 76-6070 | 1 | Rotating Kit |
| 5 | 100-3175 | 1 | Camplate |
| 6 | 33-3720 | 1 | Washer |
| 7 | 32151-13 | 1 | Ring-Retaining |
| 8 | 32151-29 | 2 | Ring-Retaining |
| 9 | 252-66 | 1 | Bearing-Thrust |
| 10 | 252-71 | 2 | Washer-Thrust |
| 11 | 104-4861 | 1 | Seal-Shaft |
| 12 | 33-4930 | 1 | Gasket-Housing |
| 13 | 98-4635 | 1 | Insert-Plate, Cam |
| 14 | 105-9762 | 6 | Washer |
| 16 | 76-6190 | 1 | Seal-Shaft |
| 17 | 98-4640 | 6 | Screw-Cap |
| 20 | 120-1989 | 1 | Relief Valve ASM |

| Ref. | Part Number | Qty. | Description |
|---|---|---|---|
| 21 | 120-1989 | 1 | Relief Valve ASM |
| 22 | 98-4639 | 2 | Bearing-Cone |
| 23 | 98-4645 | 1 | Plate-Cover |
| 24 | 98-4644 | 1 | Plate-Cover |
| 26 | 76-6150 | 2 | Pin-Dowel |
| 27 | 76-6160 | 2 | Capscrew |
| 28 | 76-6170 | 2 | Capscrew |
| 29 | 120-5751 | 1 | Key |
| 30 | 94-3646 | 1 | Key |
| 37 | 74-9040 | 1 | Coupler |
| 39 | 104-4046 | 2 | Bearing-Cup |
| 40 | 100-3182 | 1 | Shim Kit |
| 41 | 100-3179 | 2 | O-Ring |
| 48 | 100-3180 | 1 | Plate-Valve |
| 50 | 74-9280 | 1 | Plug ASM |
| 50:1 | | 1 | O-Ring ■ |
| 51 | 74-9280 | 1 | Plug ASM |
| 51:1 | | 1 | O-Ring ■ |

● Not illustrated

■ Not serviced separately

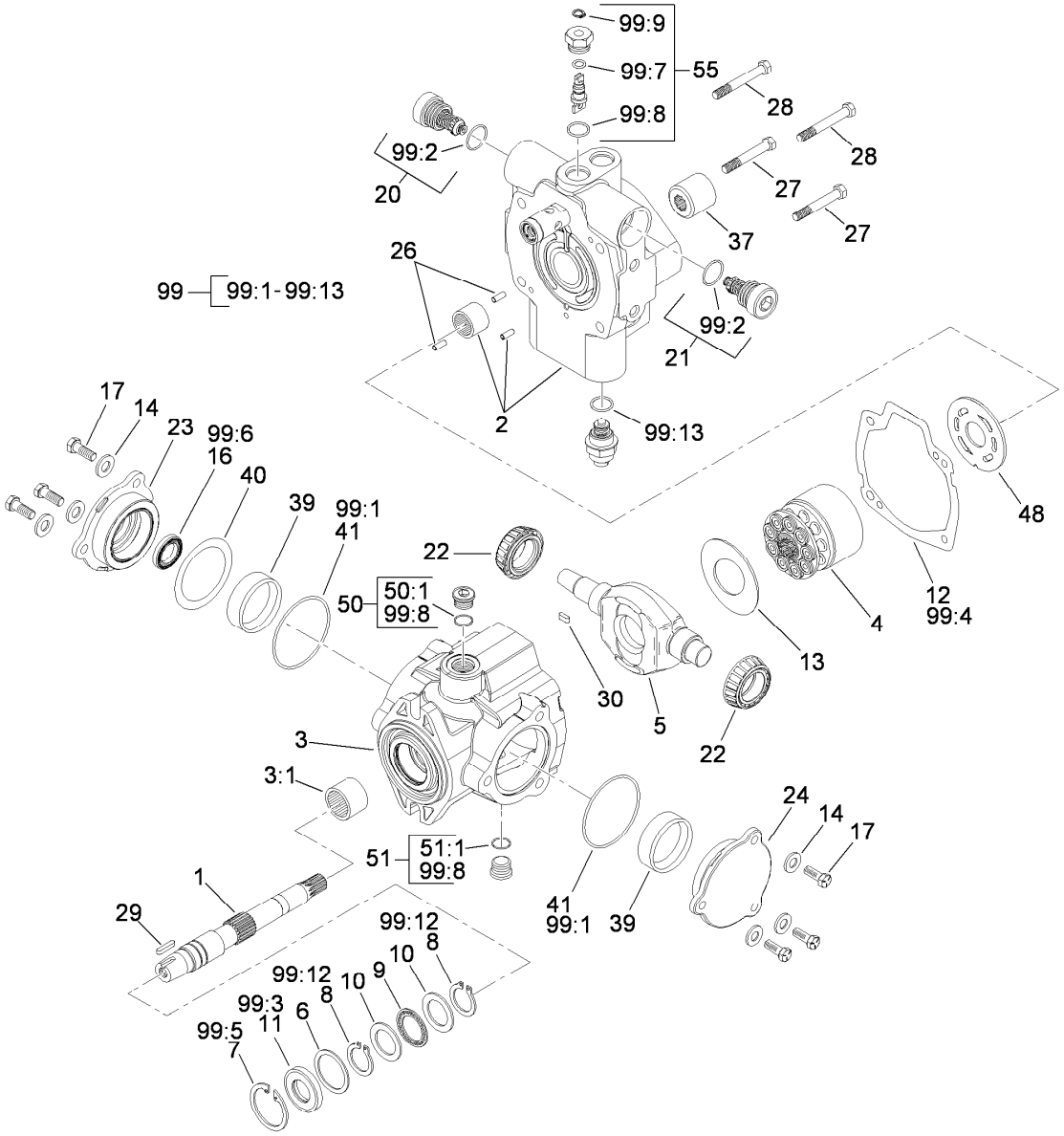


# Hydraulic Pump Assembly No. 121-9557 (continued)

| Ref. | Part Number | Qty. | Description |
|---|---|---|---|
| 55 | 105-3811 | 1 | Valve-Bypass |
| 99 | 120-5754 | 1 | Seal Kit |
| 99:1 | | 2 | O-Ring ■ |
| 99:2 | | 2 | O-Ring ■ |
| 99:3 | | 1 | Seal-Shaft ■ |
| 99:4 | | 1 | Gasket ■ |
| 99:5 | | 1 | Ring-Retaining ■ |
| 99:6 | | 1 | Seal-Shaft ■ |

| Ref. | Part Number | Qty. | Description |
|---|---|---|---|
| 99:7 | | 1 | O-Ring ■ |
| 99:8 | | 5 | O-Ring ■ |
| 99:9 | | 1 | Ring-Retaining ■ |
| 99:10 | | 1 | O-Ring ● ■ |
| 99:11 | | 1 | O Ring-Molded ● ■ |
| 99:12 | | 2 | Ring-Retaining ■ |
| 99:13 | | 1 | O-Ring ● ■ |

● Not illustrated

■ Not serviced separately

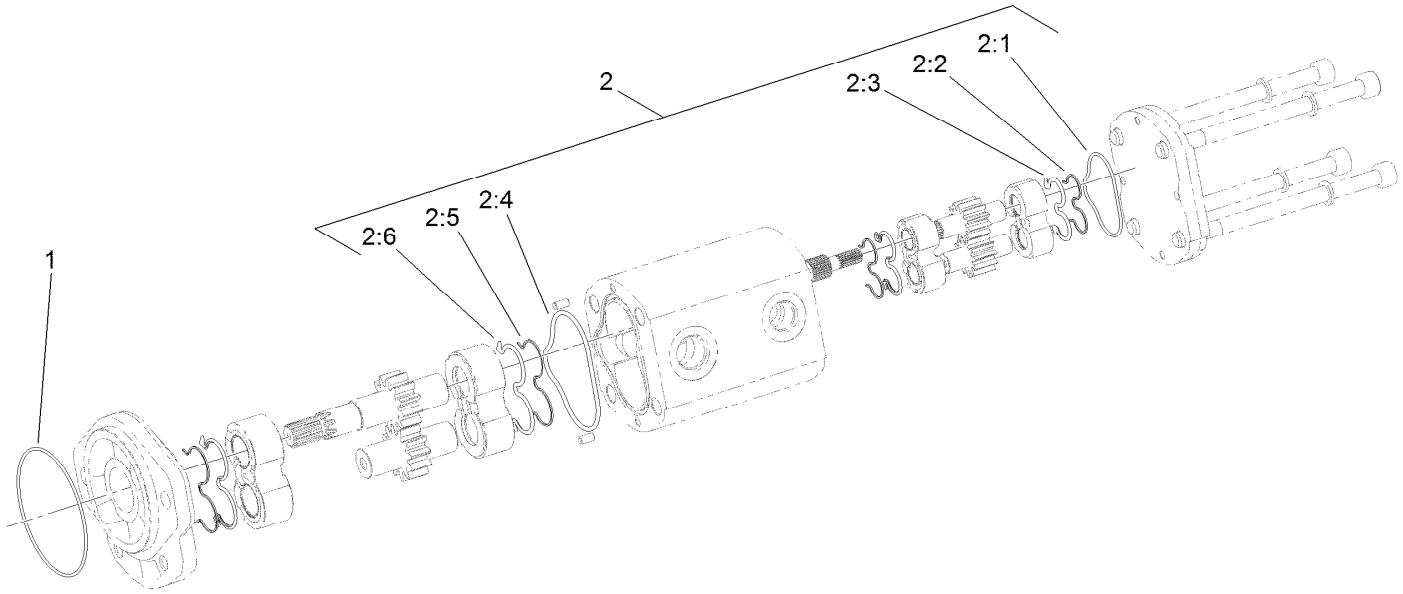


# Hydraulic Gear Pump Assembly No. 114-9956

| *Ref.* | *Part Number* | *Qty.* | *Description* |
|---|---|---|---|
| 1 | 353-949 | 1 | O-Ring |
| 2 | 119-7134 | 1 | Kit-Seal |
| 2:1 | | 1 | O-Ring ● |
| 2:2 | | 2 | Seal-Extrusion, Anti ● |
| 2:3 | | 2 | Seal-Backup ● |
| 2:4 | | 1 | O-Ring ● |
| 2:5 | | 2 | Seal-Extrusion, Anti ● |
| 2:6 | | 2 | Seal-Backup ● |

● Not serviced separately

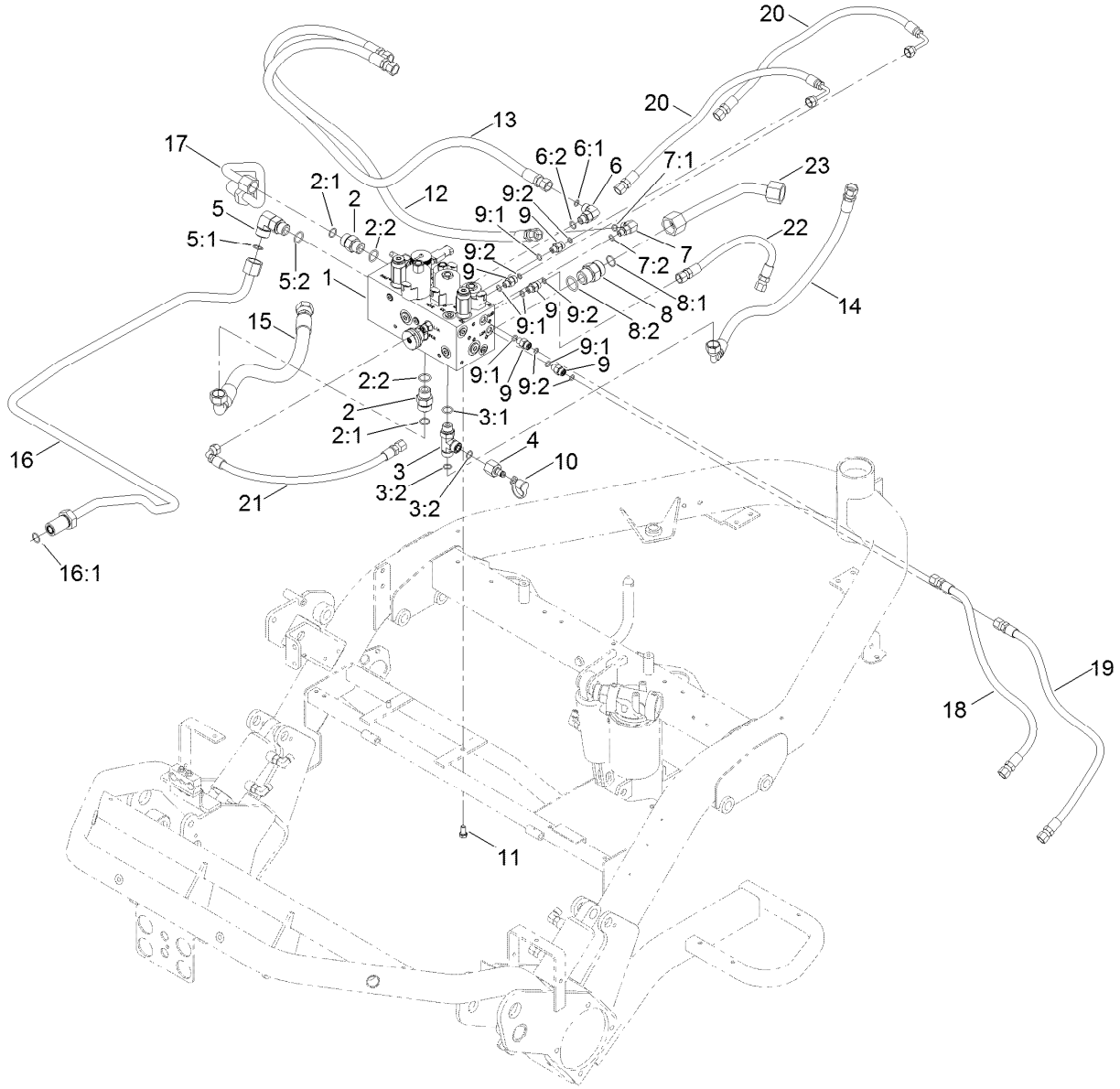


# Manifold Assembly

| Ref. | Part Number | Qty. | Description |
|---|---|---|---|
| 1 | 112-9197 | 1 | Manifold ASM W/Backlap |
| 2 | 340-7 | 2 | Fitting-Straight |
| 2:1 | 237-65 | 1 | O-Ring |
| 2:2 | 237-80 | 1 | O-Ring |
| 3 | 340-109 | 1 | Fitting-Tee |
| 3:1 | 237-79 | 1 | O-Ring |
| 3:2 | 237-30 | 2 | O-Ring |
| 4 | 100-5616 | 1 | Fitting |
| 5 | 340-17 | 1 | Fitting-Elbow, 90 DEG |
| 5:1 | 237-65 | 1 | O-Ring |
| 5:2 | 237-80 | 1 | O-Ring |
| 6 | 340-77 | 1 | Fitting-Elbow, 90 DEG |
| 6:1 | 237-22 | 1 | O-Ring |
| 6:2 | 237-42 | 1 | O-Ring |
| 7 | 340-97 | 1 | Fitting-Elbow, 90 DEG |
| 7:1 | 237-22 | 1 | O-Ring |
| 7:2 | 237-78 | 1 | O-Ring |
| 8 | 340-9 | 1 | Fitting-STR |
| 8:1 | 237-58 | 1 | O-Ring |

| Ref. | Part Number | Qty. | Description |
|---|---|---|---|
| 8:2 | 237-81 | 1 | O-Ring |
| 9 | 340-92 | 5 | Fitting-Straight |
| 9:1 | 237-78 | 1 | O-Ring |
| 9:2 | 237-21 | 1 | O-Ring |
| 10 | 354-79 | 1 | Cap-Dust |
| 11 | 33114-016 | 2 | Screw-HH |
| 12 | 95-8842 | 1 | Hose-HYD |
| 13 | 105-9790 | 1 | Hose ASM |
| 14 | 131-6205 | 1 | Hose ASM |
| 15 | 131-6206 | 1 | Hose ASM |
| 16 | 94-1320 | 1 | Tube-HYD |
| 16:1 | 237-65 | 1 | O-Ring |
| 17 | 94-1317 | 1 | Tube-HYD |
| 18 | 131-2004 | 1 | Hose ASM |
| 19 | 131-2005 | 1 | Hose ASM |
| 20 | 131-2006 | 2 | Hose ASM |
| 21 | 112-9185 | 1 | Hose ASM |
| 22 | 106-7981 | 1 | Hose-HYD |
| 23 | 94-4518 | 1 | Tube ASM |

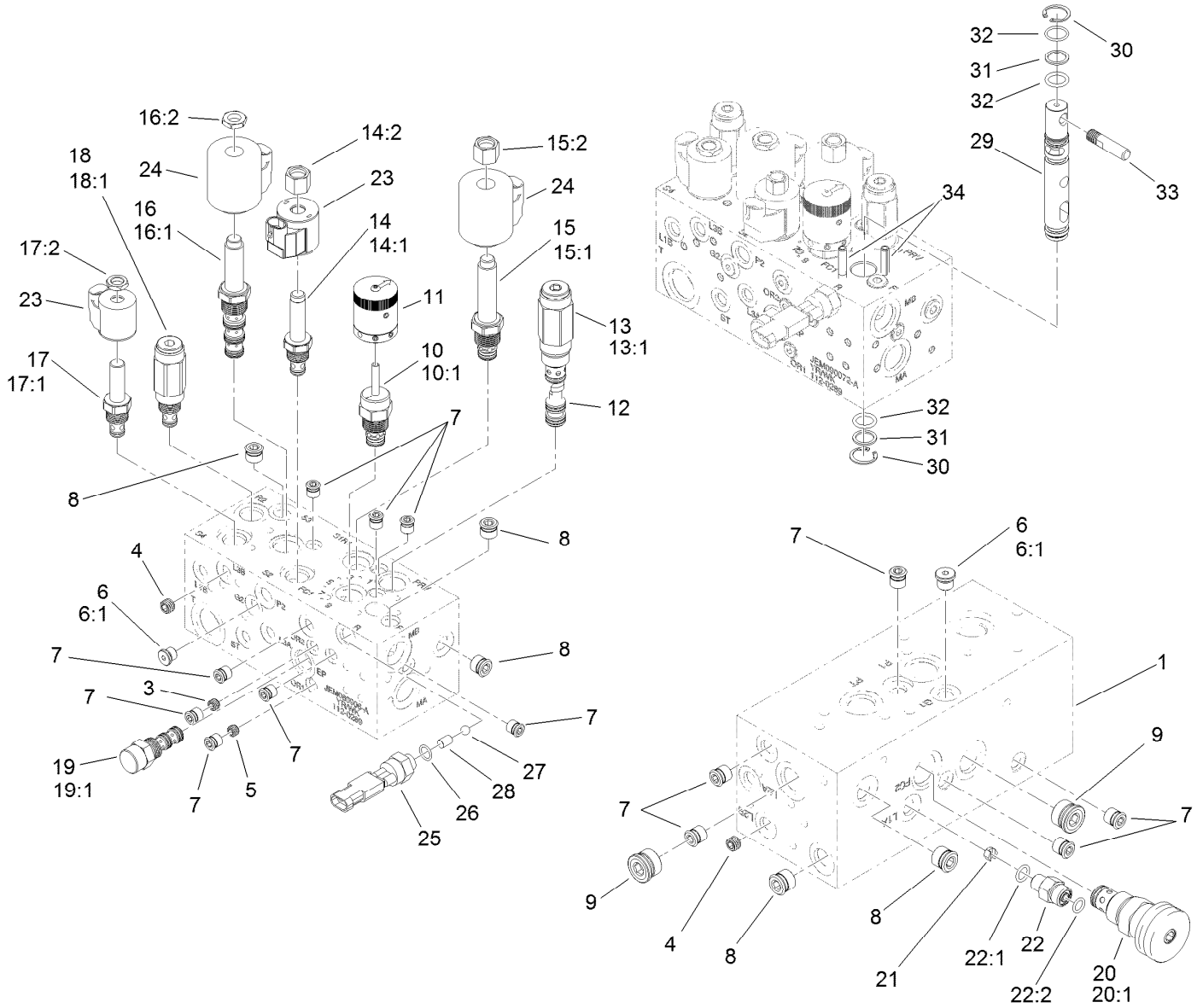


# Hydraulic Manifold Assembly No. 112-9197

| Ref. | Part Number | Qty. | Description |
|---|---|---|---|
| 1 | | 1 | Body-Manifold ● |
| 3 | 112-9202 | 1 | Orifice-Flow, Control (.060) |
| 4 | 110-8887 | 2 | Plug-Orifice (0.055) |
| 5 | 112-9203 | 1 | Orifice-Control, Flow (.013) |
| 6 | 353-990 | 2 | Plug ASM |
| 6:1 | 237-78 | 1 | O-Ring |
| 7 | 106-1025 | 13 | Plug-HYD |
| 8 | 106-1026 | 5 | Plug-HYD |
| 9 | 106-1027 | 2 | Plug |
| 10 | 110-8769 | 1 | Valve-Control, Manual Flow |
| 10:1 | 110-2633 | 1 | Seal Kit |
| 11 | 110-8767 | 1 | Rotary Handle ASM |
| 12 | 119-3506 | 1 | Piston-Pilot |
| 13 | 112-9205 | 1 | Valve-Relief |
| 13:1 | 105-9159 | 1 | Seal Kit |
| 14 | 107-7517 | 1 | Valve-Solenoid |
| 14:1 | 105-9156 | 1 | Seal Kit |
| 14:2 | 107-7812 | 1 | Nut-Solenoid |

| Ref. | Part Number | Qty. | Description |
|---|---|---|---|
| 15 | 110-8768 | 1 | Valve-Relief, Solenoid (3000 PSI) |
| 15:1 | 110-6316 | 1 | Seal Kit |
| 15:2 | 130-8180 | 1 | Nut-Coil (9/16-24 Unef-2B) |
| 16 | 110-8906 | 1 | Valve-Solenoid |
| 16:1 | 110-8908 | 1 | Spool Valve Seal Kit |
| 16:2 | 110-2634 | 1 | Nut-Coil |
| 17 | 112-9206 | 1 | Solenoid Valve ASM |
| 17:1 | 105-9156 | 1 | Seal Kit |
| 17:2 | 110-2634 | 1 | Nut-Coil |
| 18 | 133-8873 | 1 | Valve-Relief |
| 18:1 | 105-9156 | 1 | Seal Kit |
| 19 | 110-8988 | 1 | Element-Logic |
| 19:1 | 110-8773 | 1 | Seal Kit |
| 20 | 119-4136 | 1 | Control-Flow |
| 20:1 | 110-2633 | 1 | Seal Kit |
| 21 | 110-8903 | 1 | Orifice-Control, Flow (0.055) |
| 22 | 340-92 | 1 | Fitting-Straight |

● Not serviced separately

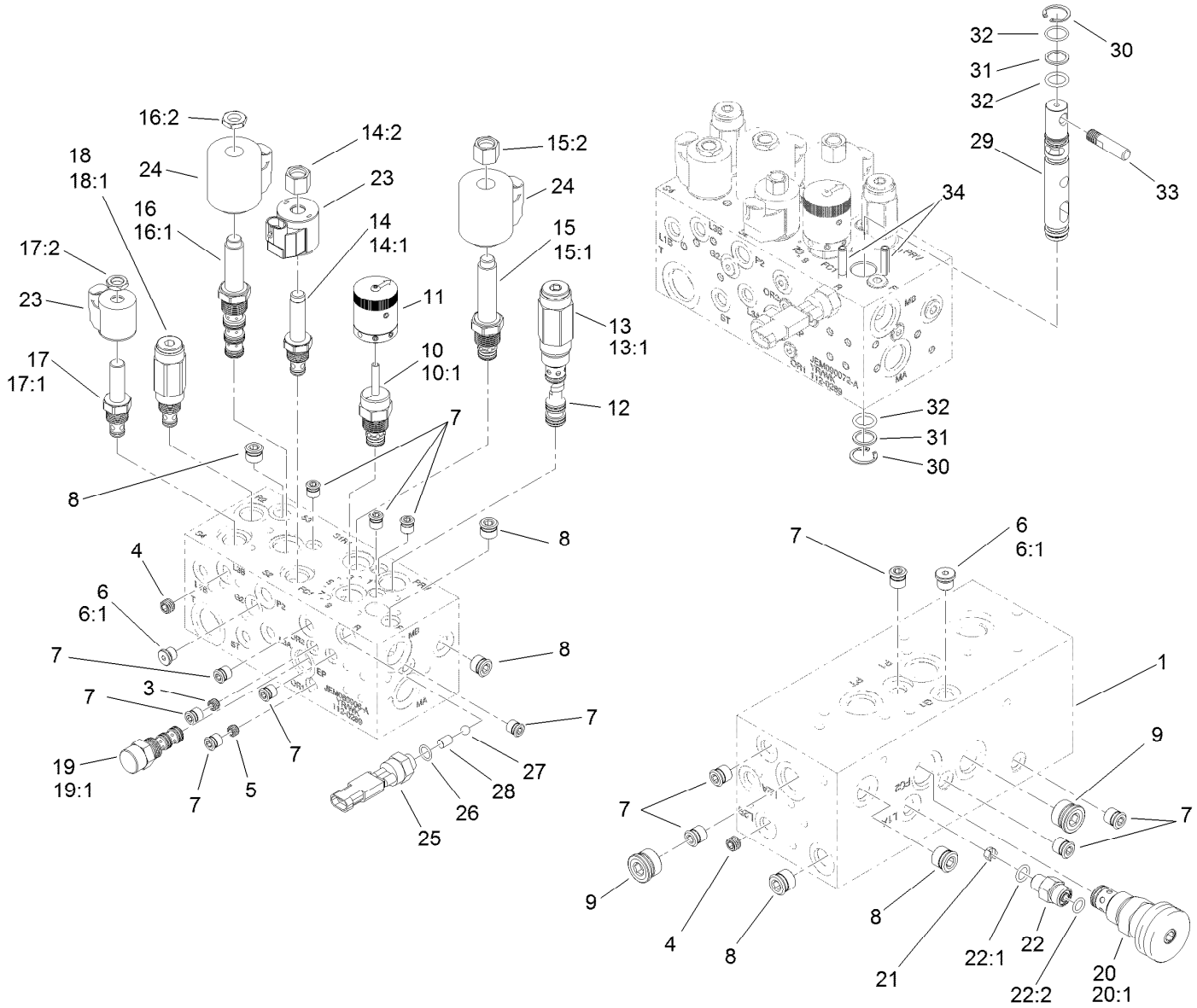


# Hydraulic Manifold Assembly No. 112-9197 (continued)

| Ref. | Part Number | Qty. | Description |
|---|---|---|---|
| 22:1 | 237-78 | 1 | O-Ring |
| 22:2 | 237-21 | 1 | O-Ring |
| 23 | 105-9333 | 2 | Coil-12Vdc |
| 24 | 110-2630 | 2 | Coil-12Vdc |
| 25 | 72-4320 | 1 | Switch-Ball |
| 26 | 110-8757 | 1 | O-Ring |
| 27 | 110-8762 | 1 | Ball-Chrome |

| Ref. | Part Number | Qty. | Description |
|---|---|---|---|
| 28 | 112-6533 | 1 | Pin-Dowel |
| 29 | 112-6536 | 1 | Spool |
| 30 | 112-6532 | 2 | Ring-Retaining |
| 31 | 112-6534 | 2 | Ring-Back Up |
| 32 | 117-4606 | 3 | O-Ring |
| 33 | 110-8758 | 1 | Handle-Spool |
| 34 | 112-6531 | 2 | Pin-Spring |

● Not serviced separately

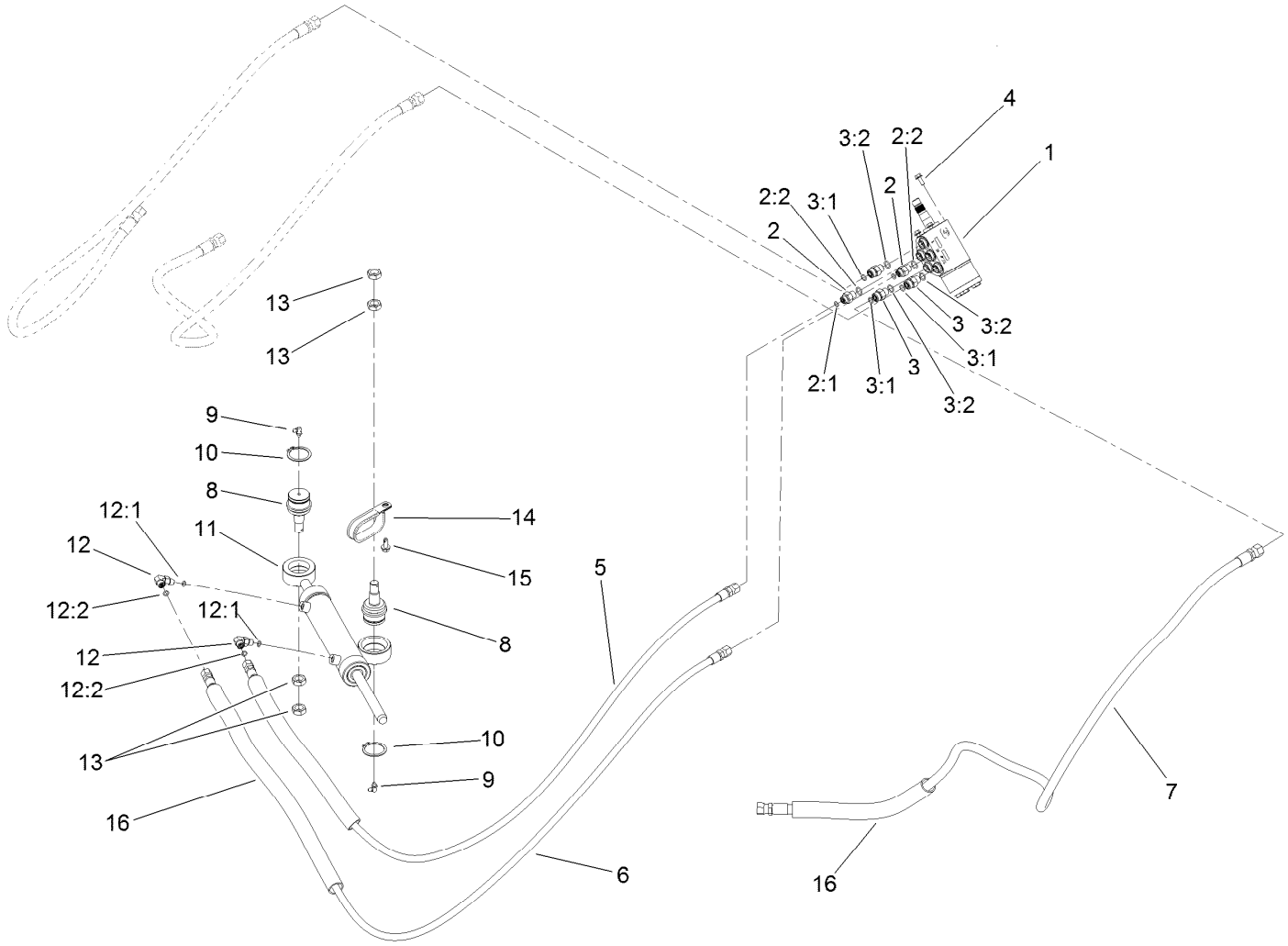


# Steering Valve Assembly

| Ref. | Part Number | Qty. | Description |
|---|---|---|---|
| 1 | 114-4672 | 1 | Steering Valve ASM |
| 2 | 340-1 | 2 | Fitting-Straight |
| 2:1 | 237-21 | 1 | O-Ring |
| 2:2 | 237-42 | 1 | O-Ring |
| 3 | 340-2 | 3 | Fitting-Straight |
| 3:1 | 237-22 | 1 | O-Ring |
| 3:2 | 237-42 | 1 | O-Ring |
| 4 | 33103-016 | 4 | Screw-HHF |
| 5 | 93-2270 | 1 | HYD Hose ASM |
| 6 | 108-5675 | 1 | Hydraulic Hose ASM |
| 7 | 105-4339 | 1 | Hose-HYD |

| Ref. | Part Number | Qty. | Description |
|---|---|---|---|
| 8 | 106-6774 | 2 | Joint-Ball |
| 9 | 302-60 | 2 | Fitting-Grease |
| 10 | 32151-104 | 2 | Ring-Retaining, External |
| 11 | 132-3778 | 1 | Cylinder-Steering |
| 12 | 340-132 | 2 | Fitting-Elbow, 90 DEG |
| 12:1 | 237-78 | 1 | O-Ring |
| 12:2 | 237-21 | 1 | O-Ring |
| 13 | 3220-6 | 4 | Nut-Jam |
| 14 | 127-0516 | 1 | Clamp-R, Double |
| 15 | 32104-32 | 1 | Screw-HWH |
| 16 | 133-9032 | 3 | Convoluted Hose Cover |

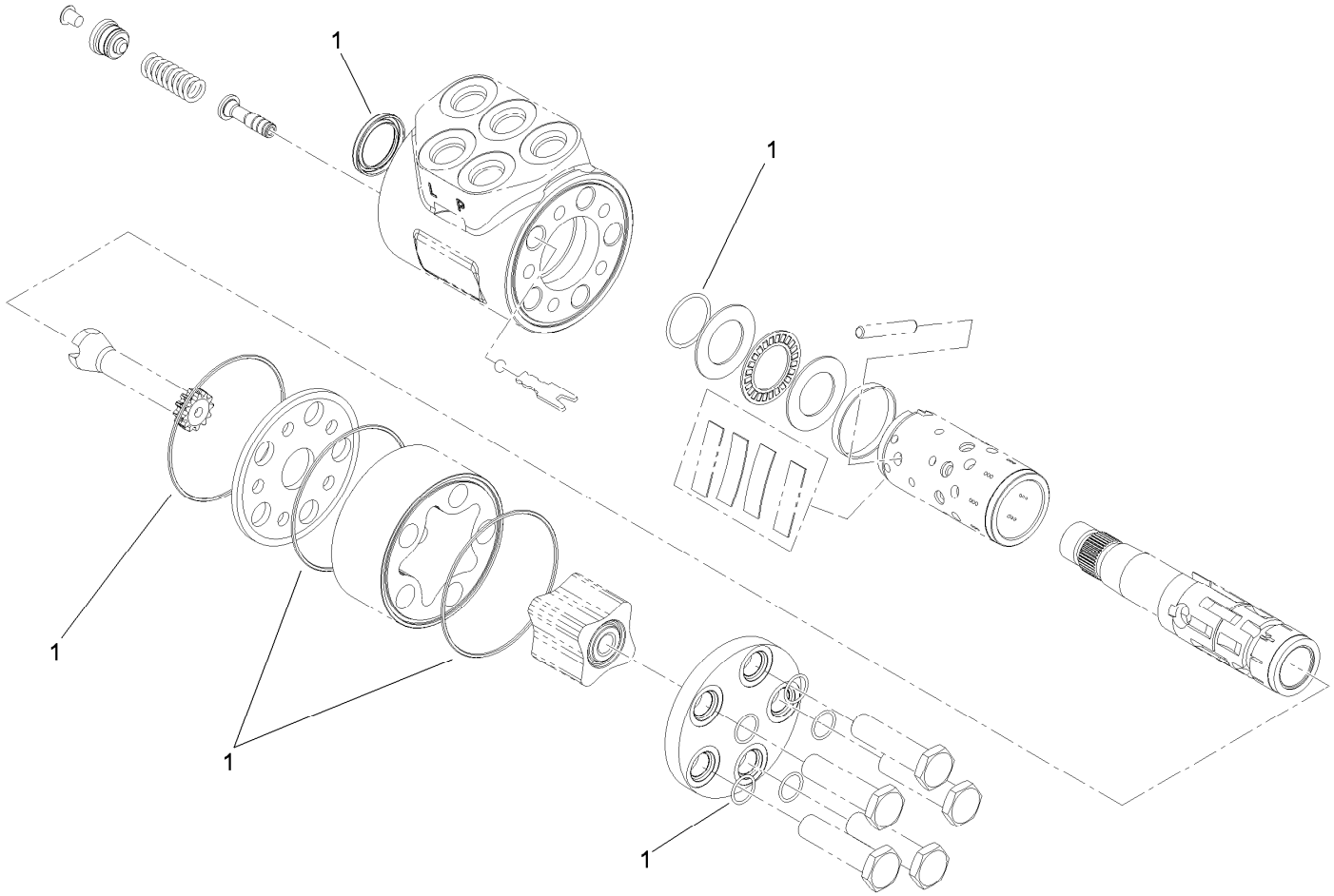


# Steering Valve Assembly No. 114-4672

| *Ref.* | *Part Number* | *Qty.* | *Description* |
|---|---|---|---|
| 1 | 106-6716 | 1 | Seal Kit |

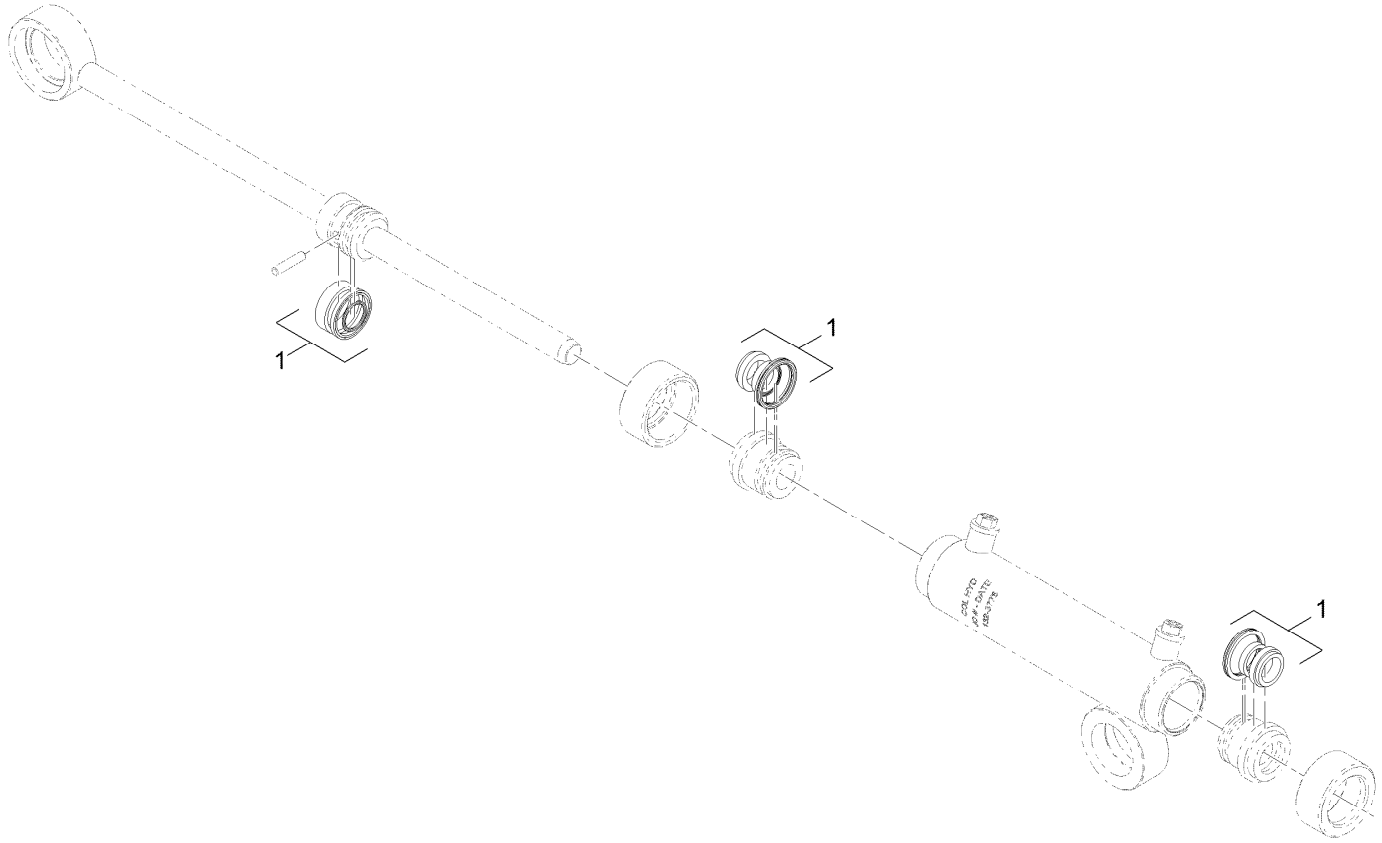


# Hydraulic Cylinder Assembly No. 132-3778

| *Ref.* | *Part Number* | *Qty.* | *Description* |
|---|---|---|---|
| 1 | 132-6964 | 1 | Seal Kit |

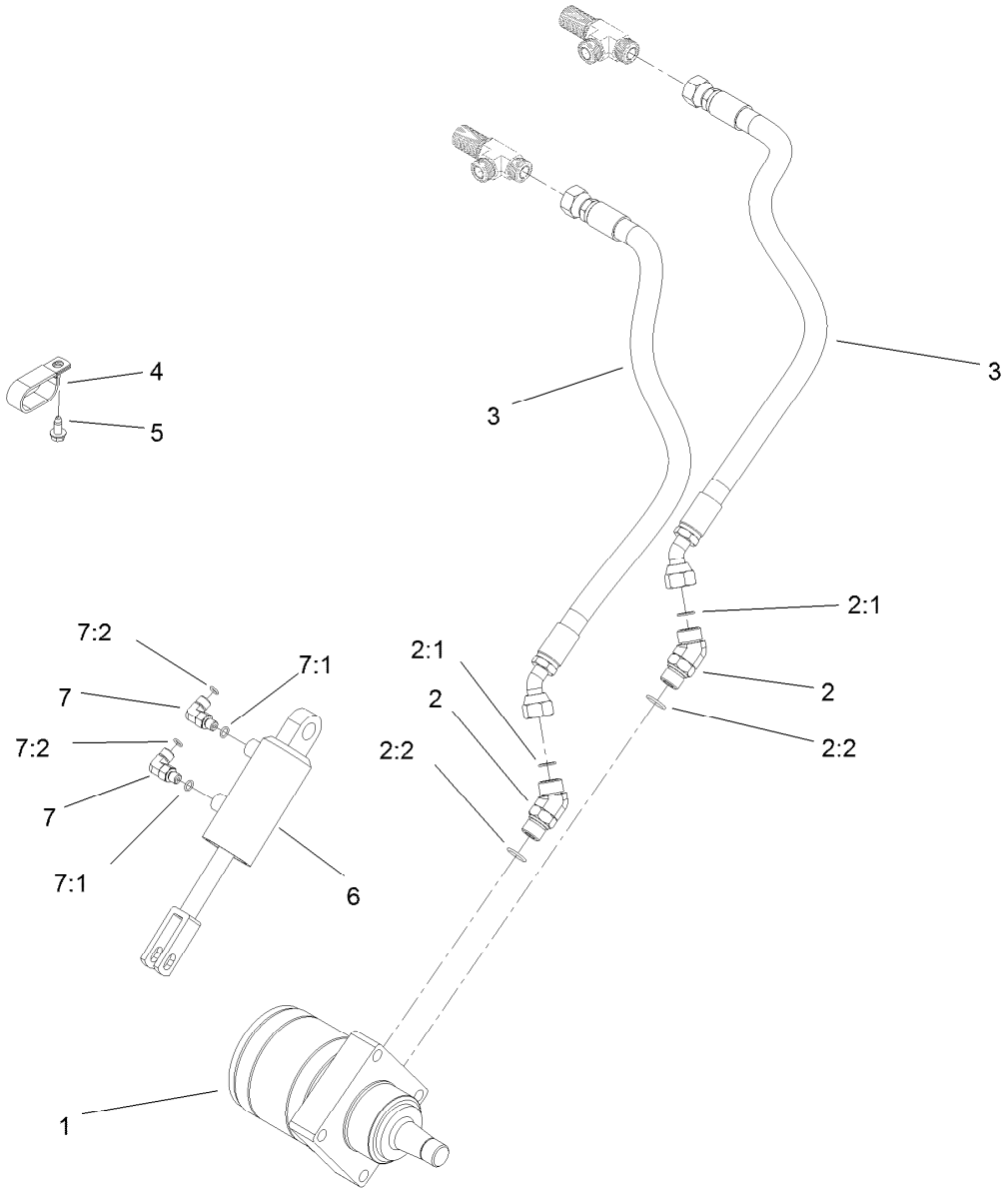


# Left Hand Wheel Motor and Lift Cylinder Assembly

| *Ref.* | *Part Number* | *Qty.* | *Description* |
|---|---|---|---|
| 1 | 110-4015 | 1 | HYD Motor ASM (CCW) |
| 2 | 340-14 | 2 | Fitting-HYD, 45 DEG |
| 2:1 | 237-65 | 1 | O-Ring |
| 2:2 | 237-80 | 1 | O-Ring |
| 3 | 131-2003 | 2 | Hose ASM |
| 4 | 2412-137 | 1 | Clamp-R, Double |
| 5 | 32104-32 | 1 | Screw-HWH |
| 6 | 105-3821 | 1 | HYD Cylinder ASM |
| 7 | 340-132 | 2 | Fitting-Elbow, 90 DEG |
| 7:1 | 237-78 | 1 | O-Ring |
| 7:2 | 237-21 | 1 | O-Ring |

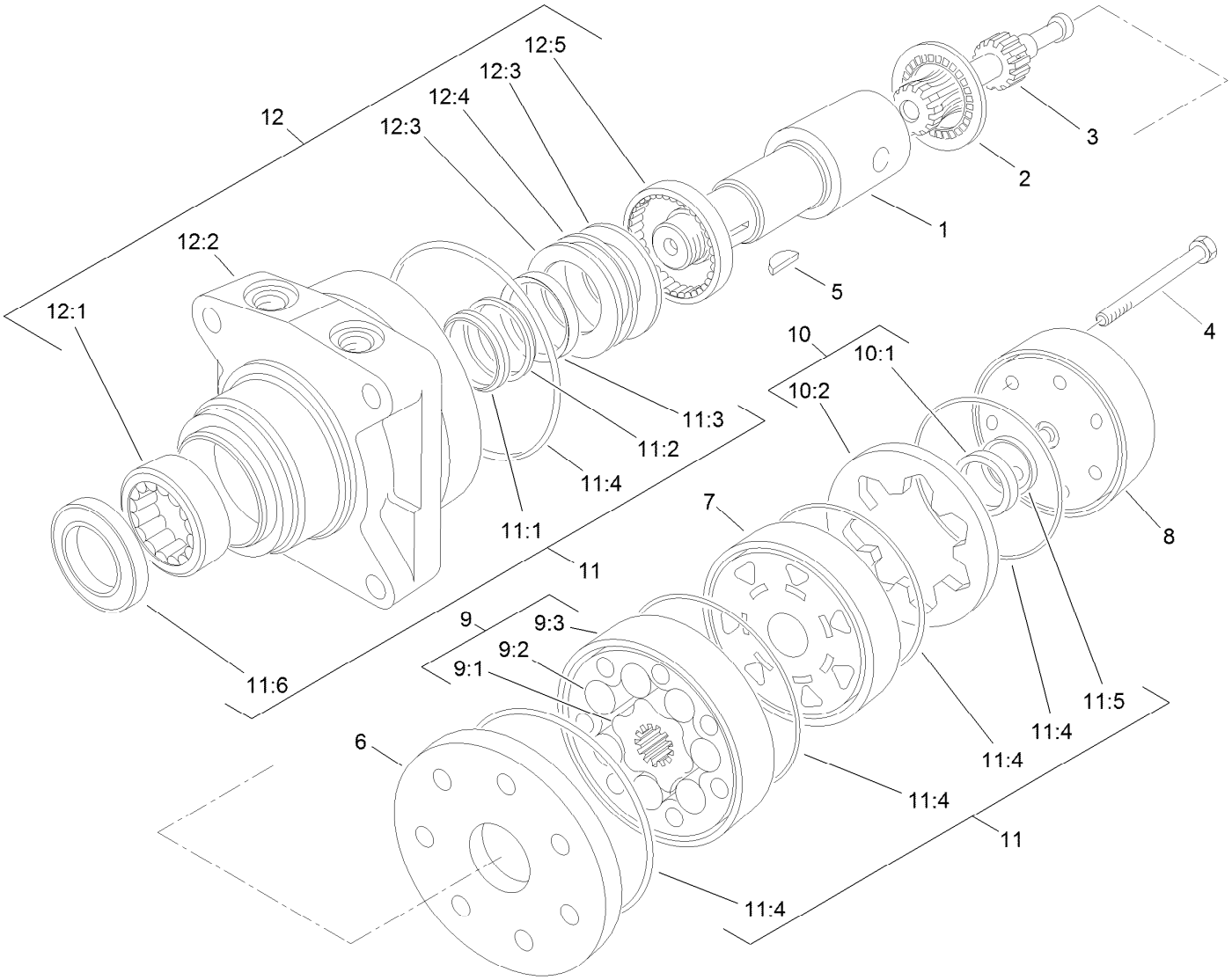


# Hydraulic Motor Assembly (CCW) No. 110-4015

| Ref. | Part Number | Qty. | Description |
|---|---|---|---|
| 1 | 76-0860 | 1 | Shaft-Coupling |
| 2 | 76-0850 | 1 | Bearing-Thrust |
| 3 | 92-9761 | 1 | Link-Drive |
| 4 | 92-9762 | 7 | Screw-HH |
| 5 | 3257-42 | 1 | Key-Woodruff |
| 6 | 92-9754 | 1 | Plate-Wear |
| 7 | 76-0840 | 1 | Manifold |
| 8 | 76-0940 | 1 | End Cover ASM |
| 9 | 92-9763 | 1 | Rotor Set |
| 9:1 | | 1 | Rotor ● |
| 9:2 | | 1 | Vane ● |
| 9:3 | | 1 | Stator ● |
| 10 | 76-0880 | 1 | Commutator ASM |
| 10:1 | | 1 | Commutator ● |

| Ref. | Part Number | Qty. | Description |
|---|---|---|---|
| 10:2 | | 1 | Ring-Commutator ● |
| 11 | 100-6131 | 1 | Seal Kit |
| 11:1 | | 1 | Ring-Back Up ● |
| 11:2 | | 1 | Washer-Back Up ● |
| 11:3 | | 1 | Seal-Shaft ● |
| 11:4 | | 5 | Seal-Ring ● |
| 11:5 | | 1 | Seal-Commutator ● |
| 11:6 | | 1 | Seal-Dirt And Water ● |
| 12 | 76-0810 | 1 | Housing ASM |
| 12:1 | | 1 | Bearing ● |
| 12:2 | | 1 | Housing ● |
| 12:3 | | 2 | Washer-Thrust ● |
| 12:4 | | 1 | Bearing-Thrust ● |
| 12:5 | | 1 | Bearing ● |

● Not serviced separately

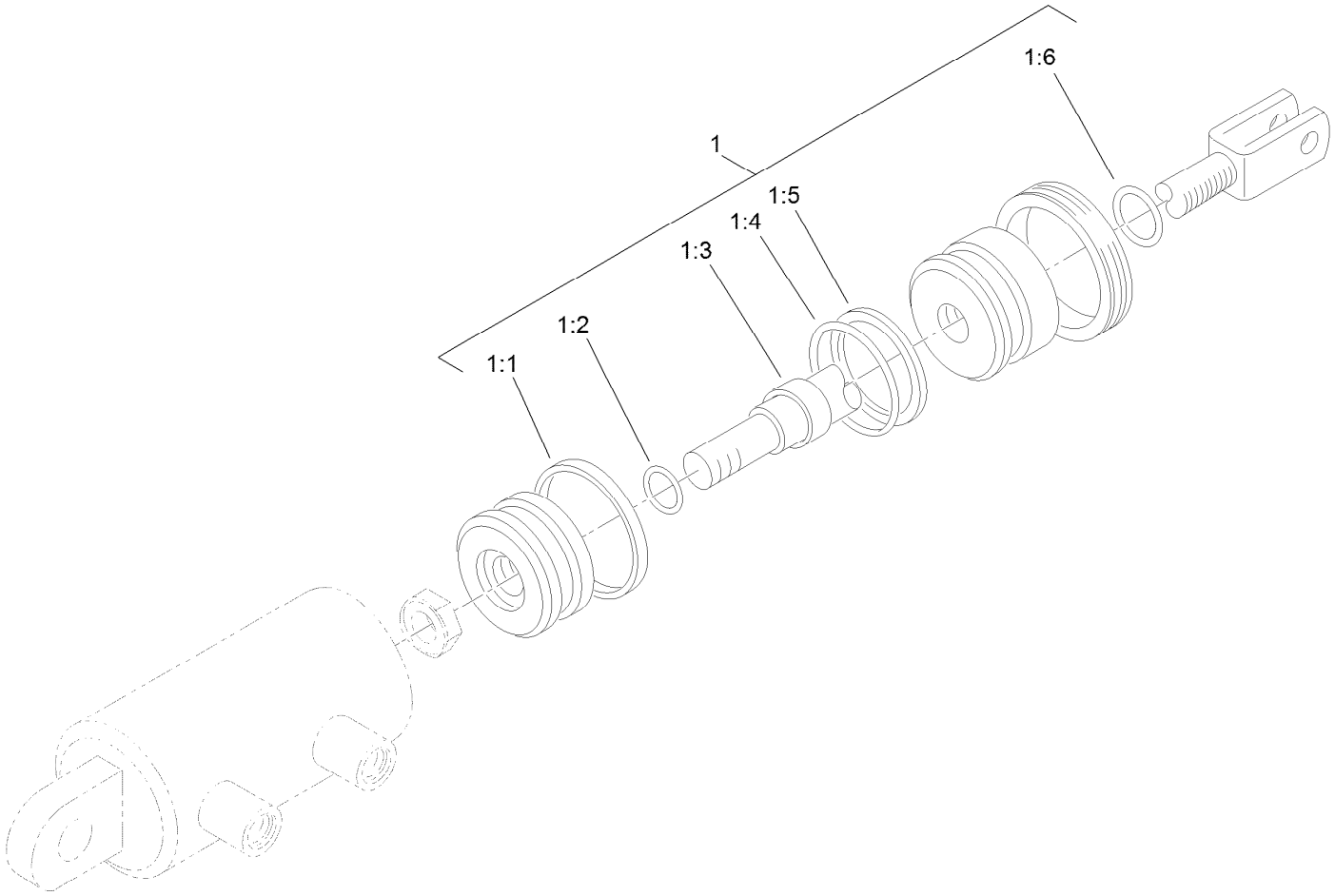


# Hydraulic Cylinder Assembly No. 105-3821

| *Ref.* | *Part Number* | *Qty.* | *Description* |
|---|---|---|---|
| 1 | 105-3836 | 1 | Seal Kit |
| 1:1 | | 1 | T-Seal ● |
| 1:2 | | 1 | O-Ring ● |
| 1:3 | | 1 | Seal-Rod ● |
| 1:4 | | 1 | O-Ring ● |
| 1:5 | | 1 | Backup ● |
| 1:6 | | 1 | Seal-Dust ● |

● Not serviced separately

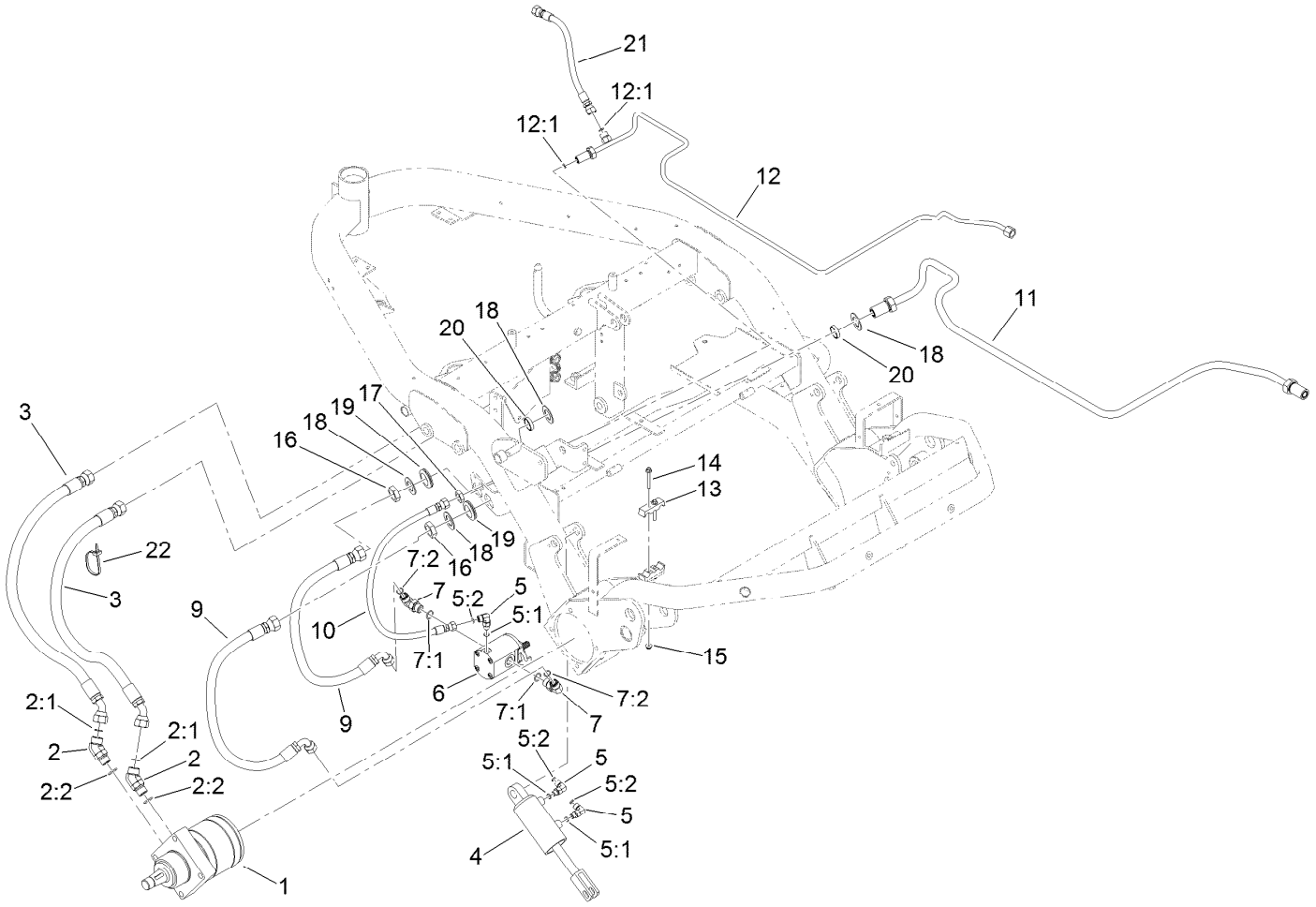


# Right Hand Wheel Motor and Lift Cylinder Assembly

| Ref. | Part Number | Qty. | Description |
|---|---|---|---|
| 1 | 110-4016 | 1 | HYD Motor ASM (CW) |
| 2 | 340-14 | 2 | Fitting-HYD, 45 DEG |
| 2:1 | 237-65 | 1 | O-Ring |
| 2:2 | 237-80 | 1 | O-Ring |
| 3 | 131-2002 | 2 | Hose ASM |
| 4 | 105-3821 | 1 | HYD Cylinder ASM |
| 5 | 340-132 | 3 | Fitting-Elbow, 90 DEG |
| 5:1 | 237-78 | 1 | O-Ring |
| 5:2 | 237-21 | 1 | O-Ring |
| 6 | 120-2072 | 1 | HYD Motor ASM |
| 7 | 340-98 | 2 | Fitting-Elbow, 90 DEG |
| 7:1 | 237-79 | 1 | O-Ring |
| 7:2 | 237-30 | 1 | O-Ring |
| 9 | 95-2907 | 2 | Hose ASM |

| Ref. | Part Number | Qty. | Description |
|---|---|---|---|
| 10 | 105-5405 | 1 | Hose-HYD |
| 11 | 94-1318 | 1 | Tube-HYD |
| 12 | 94-1321 | 1 | Tube-HYD |
| 12:1 | 237-22 | 2 | O-Ring |
| 13 | 93-2509 | 2 | Clamp-Tube |
| 14 | 321-44 | 2 | Screw-HHF |
| 15 | 104-7201 | 2 | Nut-HF, NI |
| 16 | 340-74 | 2 | Nut-Lock, Bulkhead |
| 17 | 340-70 | 1 | Nut-Lock |
| 18 | 69-9010 | 4 | Washer |
| 19 | 240-3 | 2 | Grommet-Rubber |
| 20 | 125-1984 | 2 | Spacer |
| 21 | 110-4008 | 1 | HYD Hose ASM |
| 22 | 3290-378 | 1 | Tie-Cable |

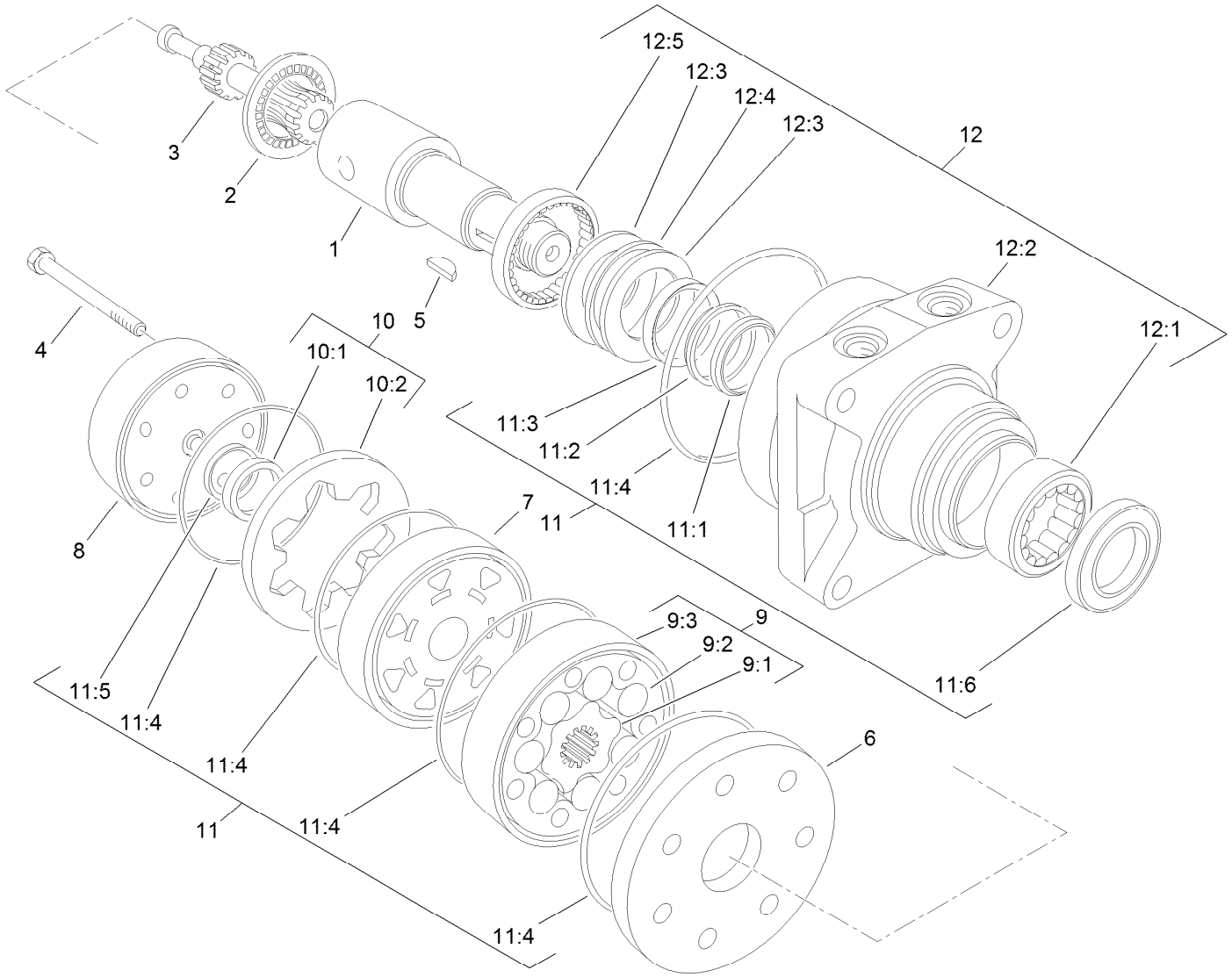


# Hydraulic Motor Assembly (CW) No. 110-4016

| Ref. | Part Number | Qty. | Description |
|---|---|---|---|
| 1 | 76-0860 | 1 | Shaft-Coupling |
| 2 | 76-0850 | 1 | Bearing-Thrust |
| 3 | 92-9761 | 1 | Link-Drive |
| 4 | 92-9762 | 7 | Screw-HH |
| 5 | 3257-42 | 1 | Key-Woodruff |
| 6 | 92-9754 | 1 | Plate-Wear |
| 7 | 76-0840 | 1 | Manifold |
| 8 | 76-0940 | 1 | End Cover ASM |
| 9 | 92-9763 | 1 | Rotor Set |
| 9:1 | | 1 | Rotor ● |
| 9:2 | | 1 | Vane ● |
| 9:3 | | 1 | Stator ● |
| 10 | 76-0880 | 1 | Commutator ASM |
| 10:1 | | 1 | Commutator ● |

| Ref. | Part Number | Qty. | Description |
|---|---|---|---|
| 10:2 | | 1 | Ring-Commutator ● |
| 11 | 100-6131 | 1 | Seal Kit |
| 11:1 | | 1 | Ring-Back Up ● |
| 11:2 | | 1 | Washer-Back Up ● |
| 11:3 | | 1 | Seal-Shaft ● |
| 11:4 | | 5 | Seal-Ring ● |
| 11:5 | | 1 | Seal-Commutator ● |
| 11:6 | | 1 | Seal-Dirt And Water ● |
| 12 | 76-0810 | 1 | Housing ASM |
| 12:1 | | 1 | Bearing ● |
| 12:2 | | 1 | Housing ● |
| 12:3 | | 2 | Washer-Thrust ● |
| 12:4 | | 1 | Bearing-Thrust ● |
| 12:5 | | 1 | Bearing ● |

● Not serviced separately

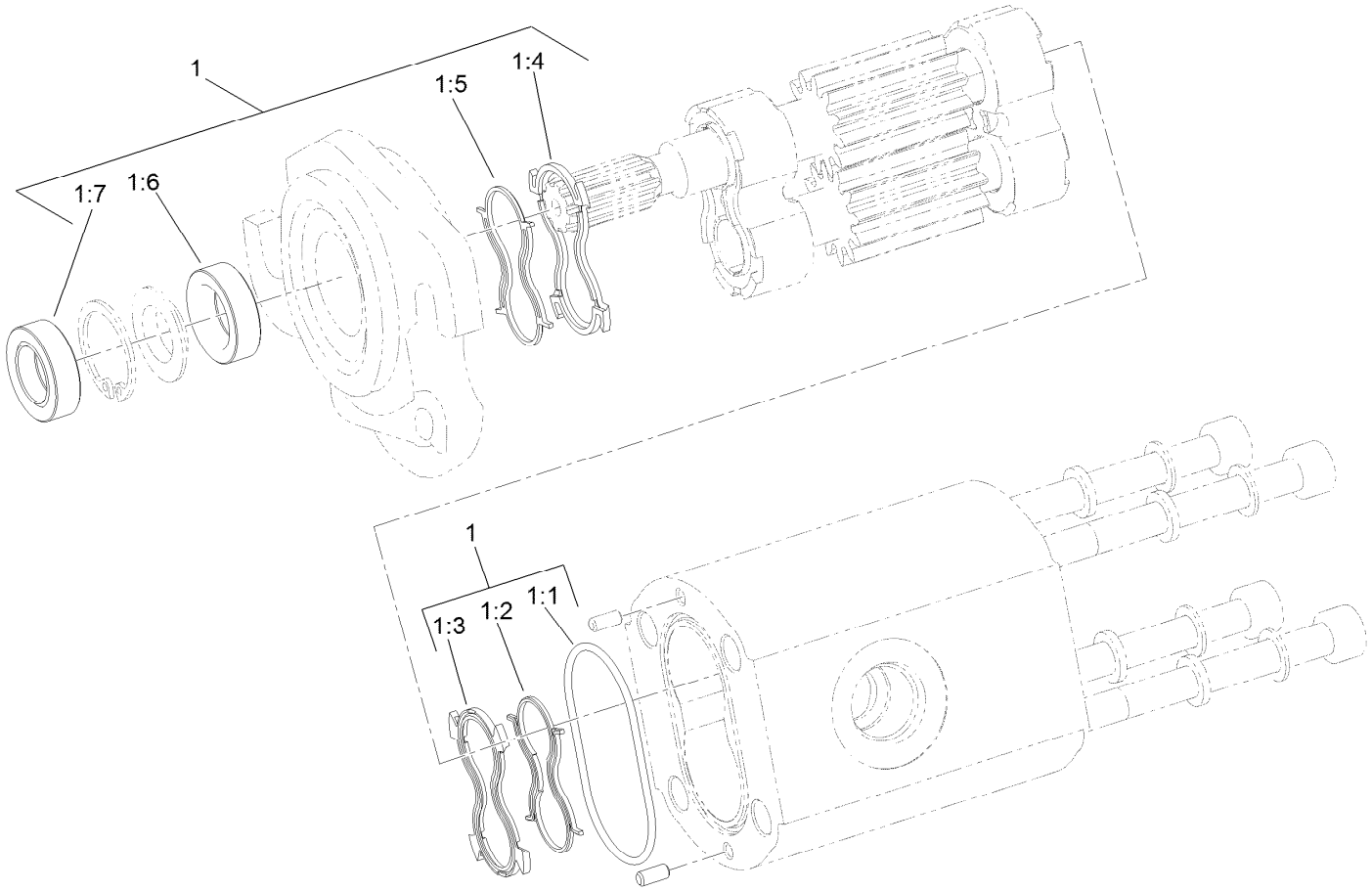


# Hydraulic Reel Motor Assembly No. 120-2072

| *Ref.* | *Part Number* | *Qty.* | *Description* |
|---|---|---|---|
| 1 | 119-7113 | 1 | Seal Kit |
| 1:1 | | 1 | O-Ring Housing ● |
| 1:2 | | 1 | Seal-Anti Extrusion ● |
| 1:3 | | 1 | Seal-Plate, Balancing ● |
| 1:4 | | 1 | Seal-Plate, Balancing ● |
| 1:5 | | 1 | Seal-Anti Extrusion ● |
| 1:6 | | 1 | Seal-Shaft (Inboard) ● |
| 1:7 | | 1 | Seal-Shaft (Outboard) ● |

● Not serviced separately

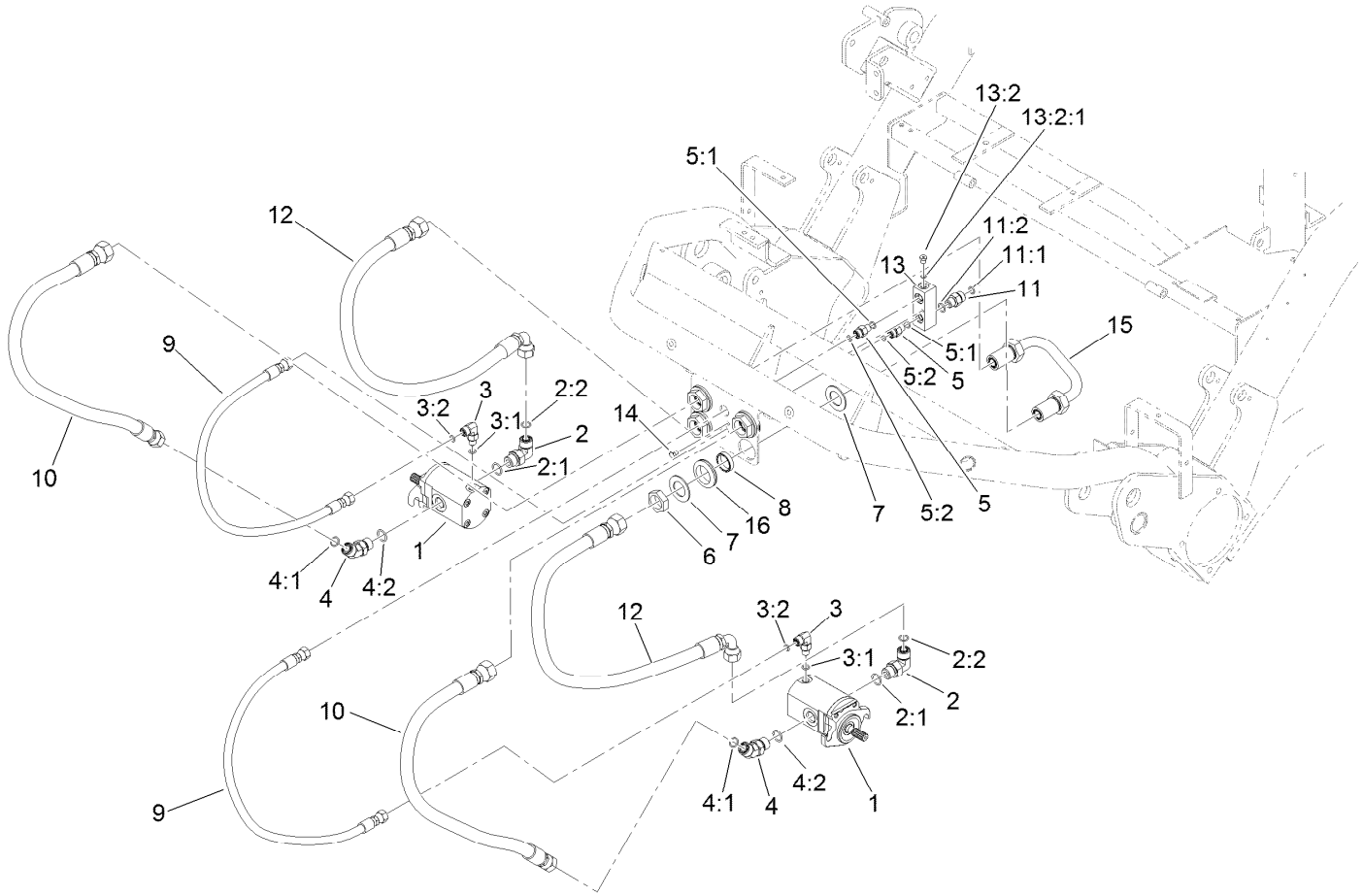


# Front Reel Motors Assembly

| Ref. | Part Number | Qty. | Description |
|---|---|---|---|
| 1 | 120-2072 | 2 | HYD Motor ASM |
| 2 | 340-98 | 2 | Fitting-Elbow, 90 DEG |
| 2:1 | 237-79 | 1 | O-Ring |
| 2:2 | 237-30 | 1 | O-Ring |
| 3 | 340-132 | 2 | Fitting-Elbow, 90 DEG |
| 3:1 | 237-78 | 1 | O-Ring |
| 3:2 | 237-21 | 1 | O-Ring |
| 4 | 340-101 | 2 | Fitting-HYD, 45 DEG |
| 4:1 | 237-30 | 1 | O-Ring |
| 4:2 | 237-79 | 1 | O-Ring |
| 5 | 340-92 | 2 | Fitting-Straight |
| 5:1 | 237-78 | 1 | O-Ring |
| 5:2 | 237-21 | 1 | O-Ring |
| 6 | 340-74 | 4 | Nut-Lock, Bulkhead |

| Ref. | Part Number | Qty. | Description |
|---|---|---|---|
| 7 | 69-9010 | 8 | Washer |
| 8 | 125-1984 | 4 | Spacer |
| 9 | 106-9674 | 2 | Hose-HYD |
| 10 | 95-2908 | 2 | Hose-HYD |
| 11 | 340-2 | 1 | Fitting-Straight |
| 11:1 | 237-22 | 1 | O-Ring |
| 11:2 | 237-42 | 1 | O-Ring |
| 12 | 95-2909 | 2 | Hose-HYD |
| 13 | 93-2238 | 1 | T-Block |
| 13:2 | 353-991 | 1 | Plug-Hex, Hollow |
| 13:2:1 | 237-156 | 1 | O-Ring |
| 14 | 33113-008 | 1 | Screw-HH |
| 15 | 94-1319 | 1 | Tube-HYD |
| 16 | 240-3 | 4 | Grommet-Rubber |

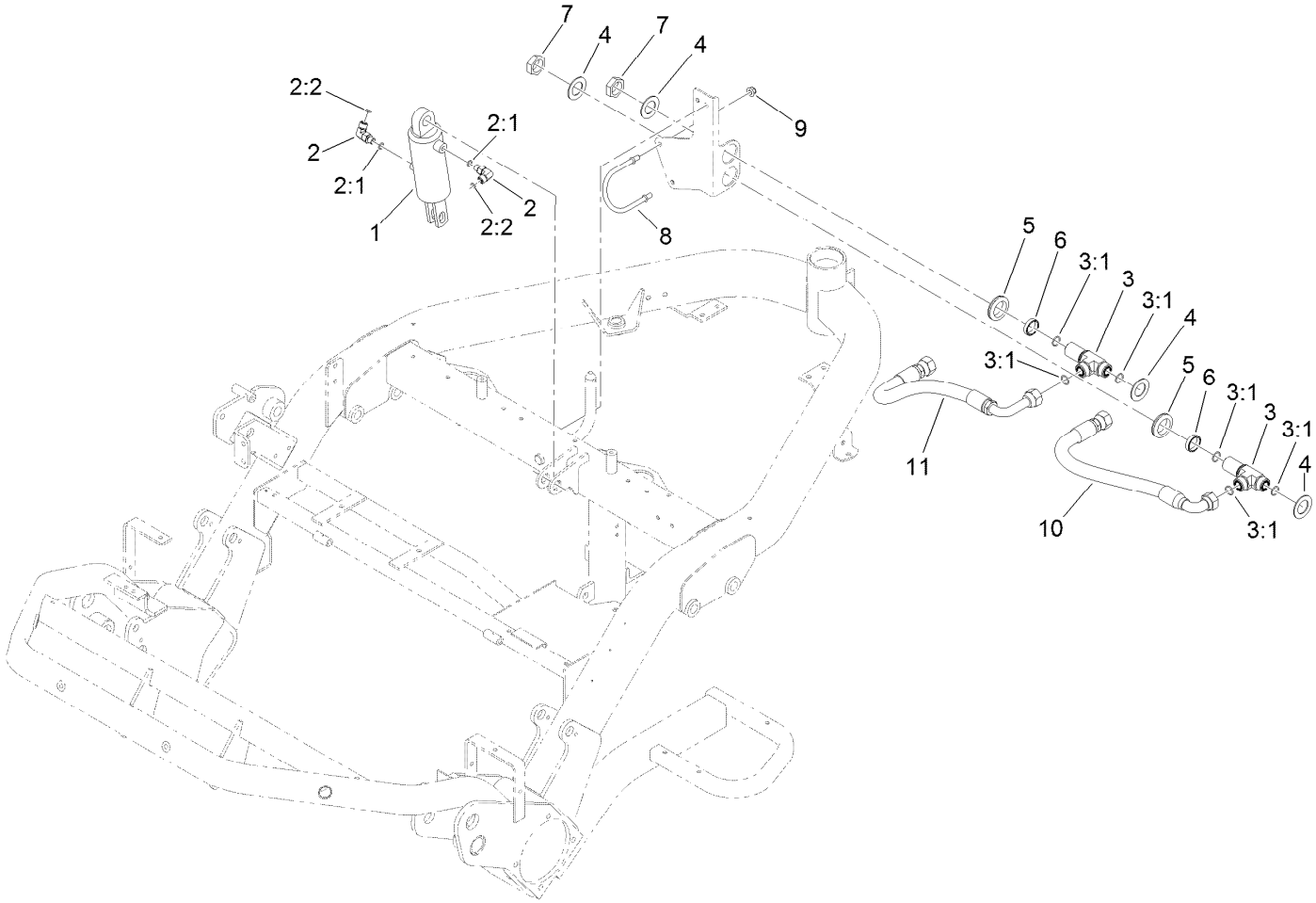


# Center Lift Cylinder Assembly

| *Ref.* | *Part Number* | *Qty.* | *Description* |
|---|---|---|---|
| 1 | 105-3820 | 1 | HYD Cylinder ASM |
| 2 | 340-132 | 2 | Fitting-Elbow, 90 DEG |
| 2:1 | 237-78 | 1 | O-Ring |
| 2:2 | 237-21 | 1 | O-Ring |
| 3 | 94-5350 | 2 | Fitting-Tee |
| 3:1 | 237-65 | 3 | O-Ring |
| 4 | 69-9010 | 4 | Washer |
| 5 | 240-3 | 2 | Grommet-Rubber |
| 6 | 125-1984 | 2 | Spacer |
| 7 | 340-74 | 2 | Nut-Lock, Bulkhead |
| 8 | 131-8776 | 1 | Retainer-Hose |
| 9 | 104-8300 | 2 | Nut-HF, NI |
| 10 | 131-6207 | 1 | Hose ASM |
| 11 | 131-6208 | 1 | Hose ASM |

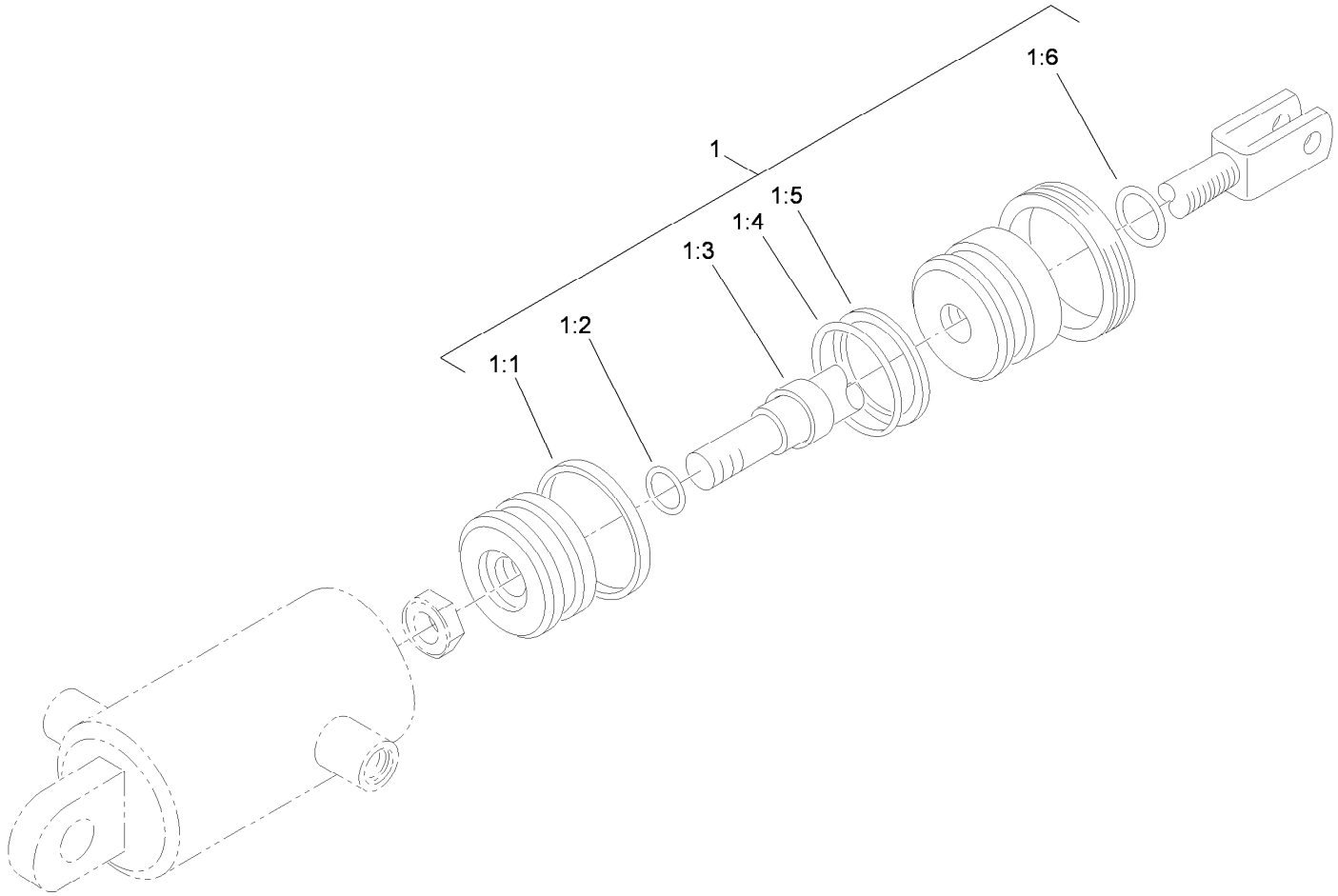


# Hydraulic Cylinder Assembly No. 105-3820

| *Ref.* | *Part Number* | *Qty.* | *Description* |
|---|---|---|---|
| 1 | 105-3836 | 1 | Seal Kit |
| 1:1 | | 1 | T-Seal ● |
| 1:2 | | 1 | O-Ring ● |
| 1:3 | | 1 | Seal-Rod ● |
| 1:4 | | 1 | O-Ring ● |
| 1:5 | | 1 | Backup ● |
| 1:6 | | 1 | Seal-Dust ● |

● Not serviced separately

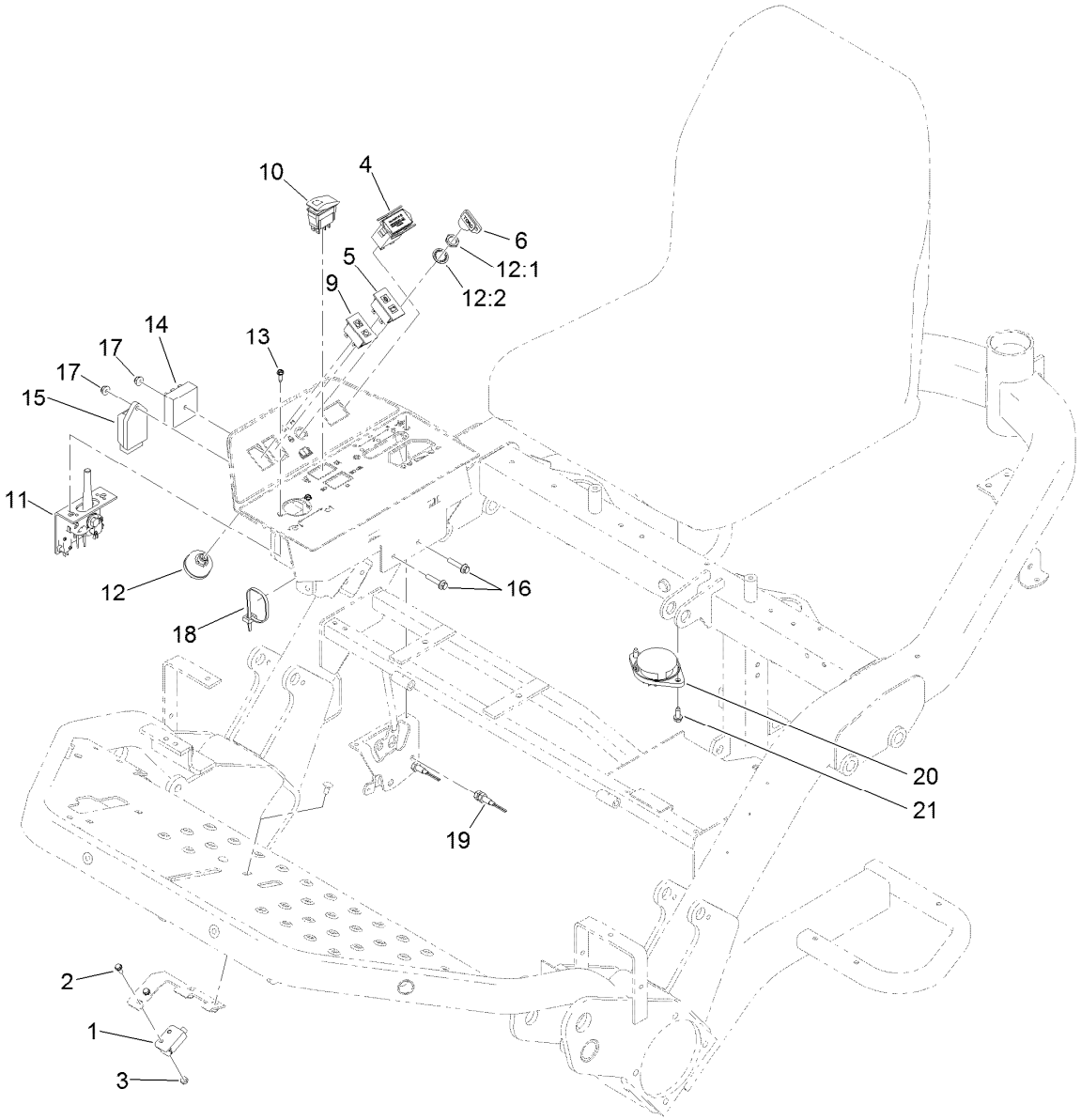


# Console Assembly

| Ref. | Part Number | Qty. | Description |
|---|---|---|---|
| 1 | 104-2057 | 1 | Sensor |
| 2 | 3290-321 | 2 | Screw-HWH |
| 3 | 3296-2 | 2 | Nut-Lock, NI |
| 4 | 1-513374 | 1 | Meter-Hour |
| 5 | 100-8070 | 1 | Lamp-Warning |
| 6 | 63-8360 | 2 | Key-Ignition |
| 9 | 100-8071 | 1 | Lamp-Warning |
| 10 | 100-8072 | 1 | Switch-Rocker, On-None-(On) |
| 11 | 120-5280 | 1 | Bracket-Joystick |
| 12 | 27-2360 | 1 | Switch |

| Ref. | Part Number | Qty. | Description |
|---|---|---|---|
| 12:1 | 218-446 | 1 | Nut-Hex |
| 12:2 | 218-447 | 1 | Washer-Lock |
| 13 | 32144-19 | 2 | Screw-SHWH |
| 14 | 92-2538 | 1 | Module-Timer |
| 15 | 107-9097 | 1 | Controller-Glow |
| 16 | 3234-21 | 2 | Screw-HHF |
| 17 | 104-7201 | 2 | Nut-HF, NI |
| 18 | 3290-378 | 2 | Tie-Cable |
| 19 | 112-0278 | 2 | Switch-Reed |
| 20 | 92-6282 | 1 | Switch-Seat |
| 21 | 32144-10 | 2 | Screw-HWH |

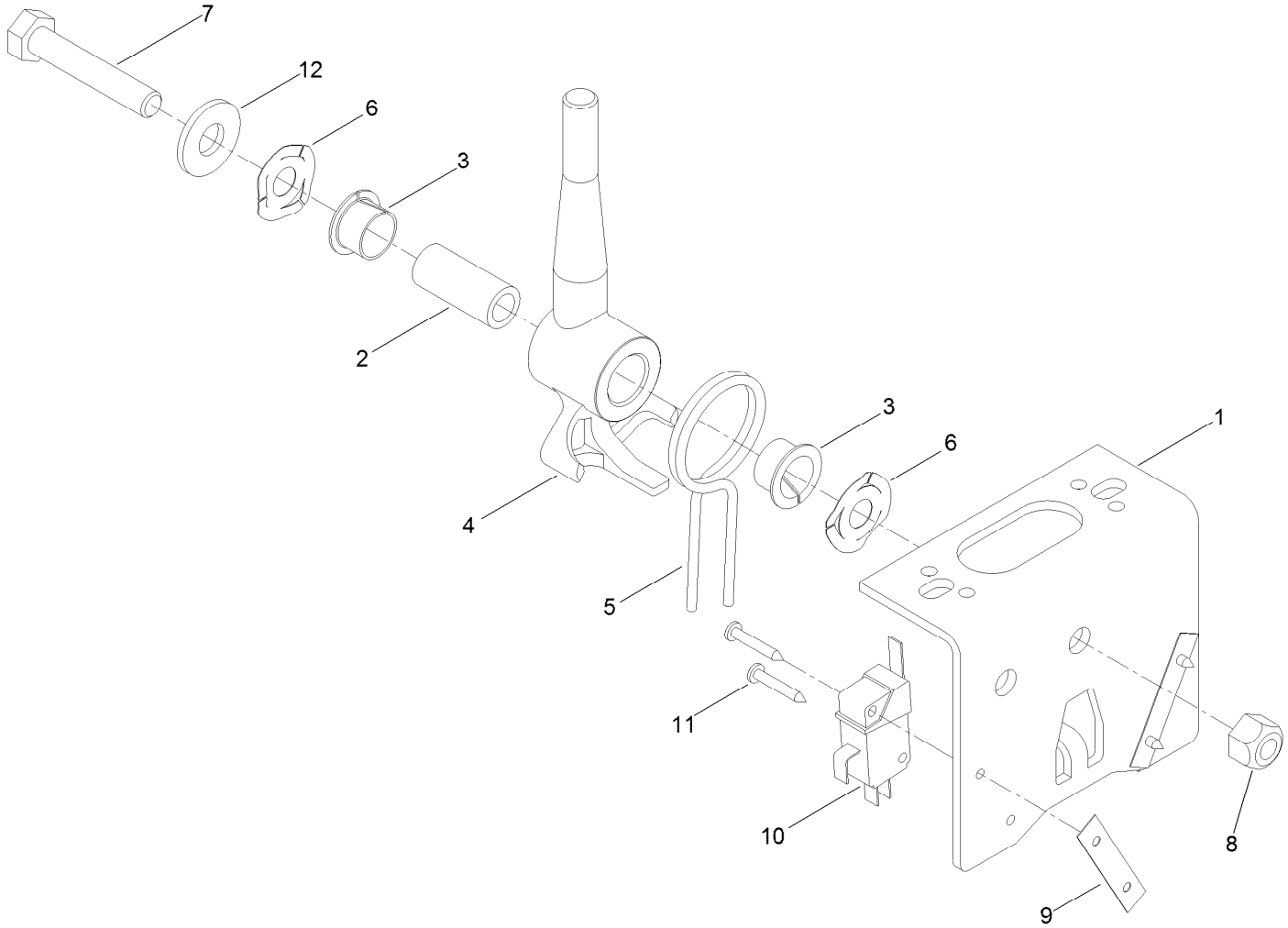


# Joystick Bracket Assembly No. 120-5280

| *Ref.* | *Part Number* | *Qty.* | *Description* |
|---|---|---|---|
| 1 | 115-5357-03 | 1 | Bracket-Joystick |
| 2 | 106-4192 | 1 | Spacer |
| 3 | 93-5547 | 2 | Bushing-Nylon |
| 4 | 119-3540 | 1 | Hub-Pivot, Joystick |
| 5 | 105-8289 | 1 | Spring-Torsion |
| 6 | 106-4193 | 2 | Washer-Finger, Spring |
| 7 | 322-9 | 1 | Screw-HH |
| 8 | 3296-29 | 1 | Nut-Lock, NI |
| 9 | 3290-354 | 2 | Nut-Speed |
| 10 | 108-6496 | 2 | Switch (W/Boot) |
| 11 | 95-3003 | 4 | Screw-PPHTF |
| 12 | 3256-3 | 1 | Washer-Flat |

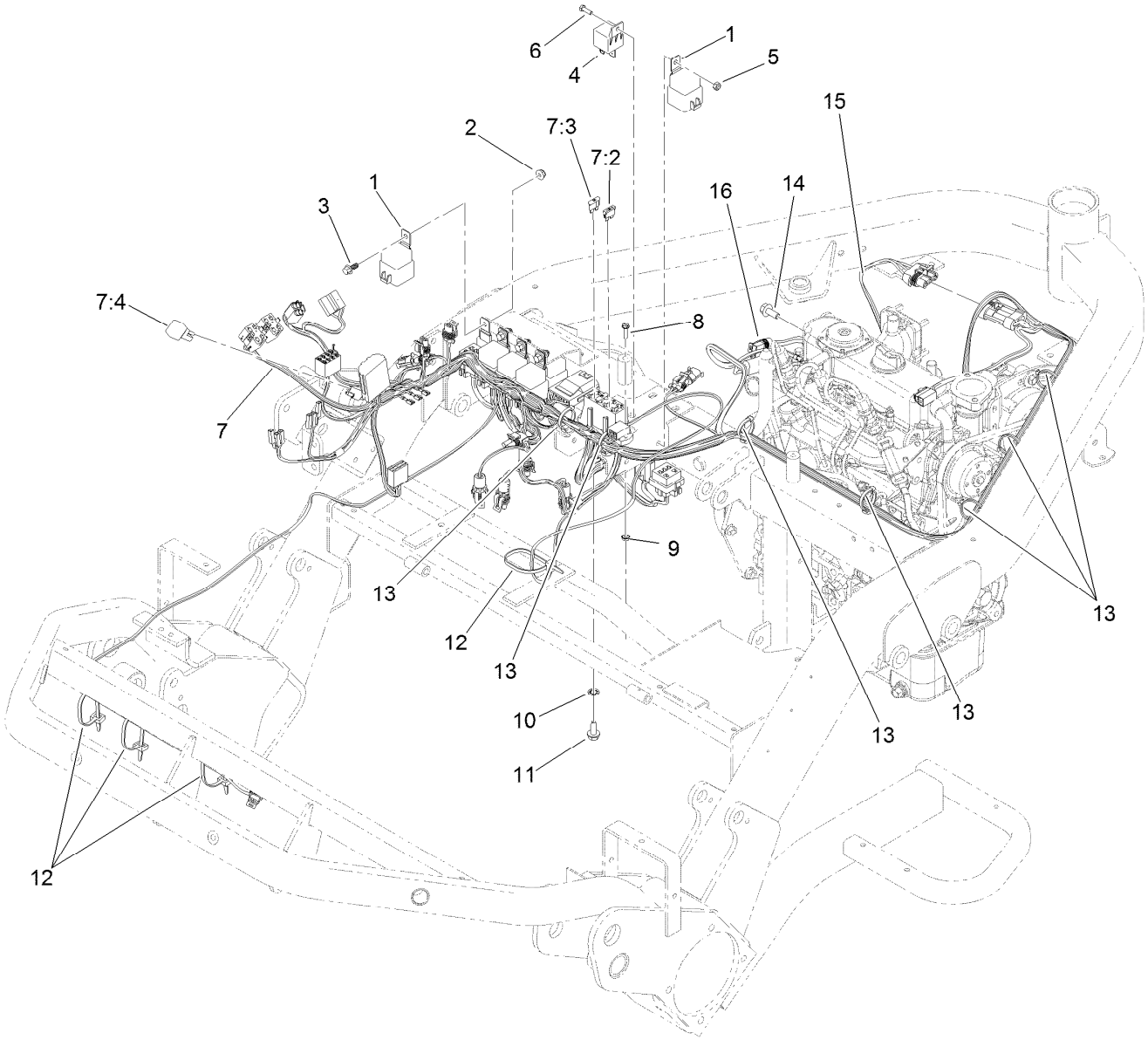


# Electrical Harness Assembly

| Ref. | Part Number | Qty. | Description |
|---|---|---|---|
| 1 | 99-7430 | 9 | Relay-Mini |
| 2 | 104-7201 | 4 | Nut-HF, NI |
| 3 | 99-6810 | 4 | Screw-HHF |
| 4 | 99-7435 | 1 | Relay |
| 5 | 3296-2 | 1 | Nut-Lock, NI |
| 6 | 3290-134 | 1 | Screw |
| 7 | 122-0149 | 1 | Harness-Wire |
| 7:1 | 92-3188 | 2 | Diode-Board, Circuit ● |
| 7:2 | 109355 | 1 | Fuse-Blade, 15 Amp |
| 7:3 | 218-578 | 2 | Fuse-Blade, 10 Amp |

| Ref. | Part Number | Qty. | Description |
|---|---|---|---|
| 7:4 | 104-4022 | 1 | Resistor-75 Ohm |
| 8 | 32105-13 | 2 | Screw-HWH |
| 9 | 32149-7 | 2 | Nut-Keps |
| 10 | 3254-2 | 1 | Washer-Lock, Internal |
| 11 | 32104-32 | 1 | Screw-HWH |
| 12 | 3290-378 | 4 | Tie-Cable |
| 13 | 32180-030 | 7 | Clip-Tie |
| 14 | 33104-020 | 1 | Screw-HHF |
| 15 | 99-3441 | 1 | Harness-Wire, Fusible Link |
| 16 | 120-6325 | 1 | Harness-Wire, Ground |

● Not illustrated

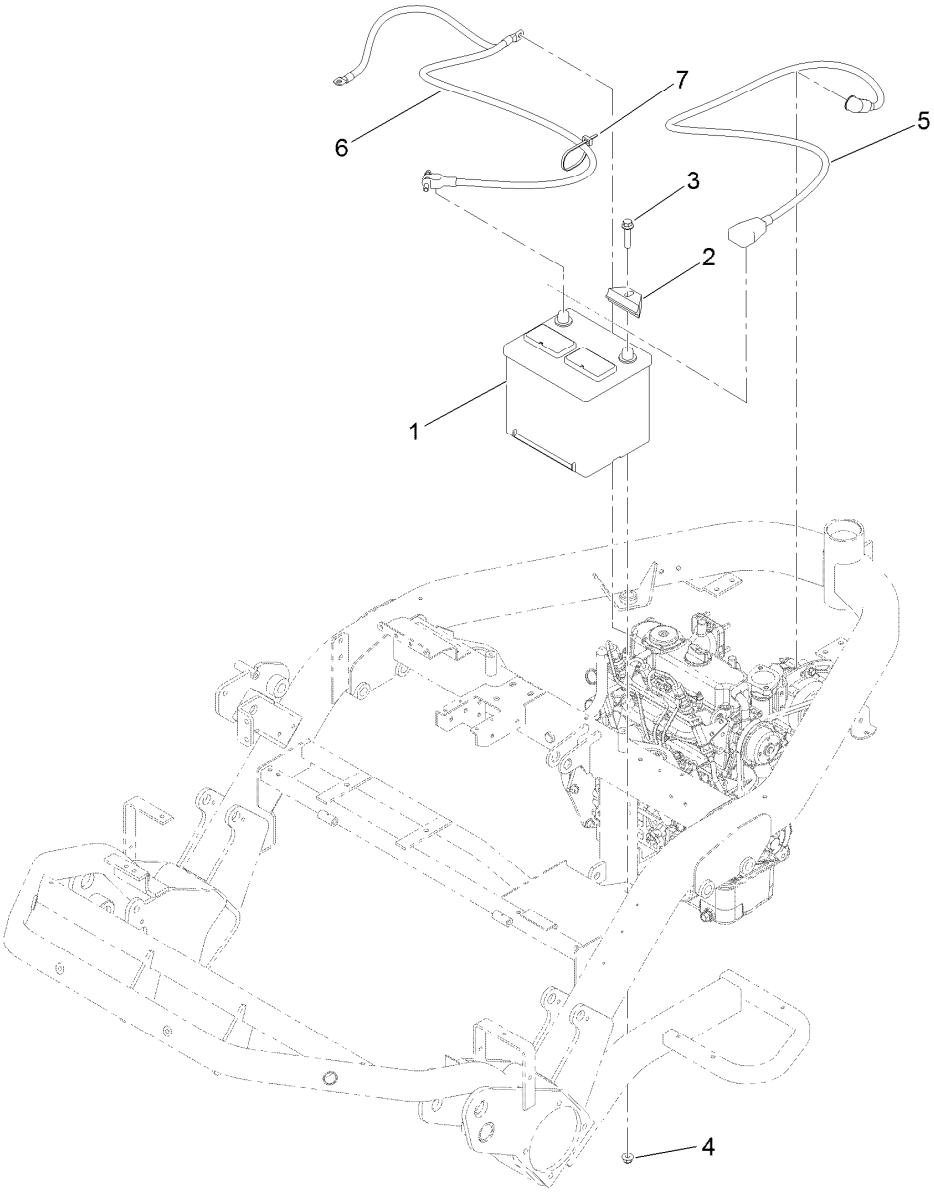


# Battery Assembly

| Ref. | Part Number | Qty. | Description |
|---|---|---|---|
| 1 | 106-5187 | 1 | Battery, 525 CCA W/O Electrolyte |
| 2 | 66-2490 | 1 | Retainer-Battery |
| 3 | 3234-19 | 1 | Screw-HHF |
| 4 | 104-8301 | 1 | Nut-HF, NI |
| 5 | 95-8853 | 1 | Cable-Battery, Positive |
| 6 | 99-8167 | 1 | Cable-Battery, Negative |
| 7 | 3290-378 | 1 | Tie-Cable |

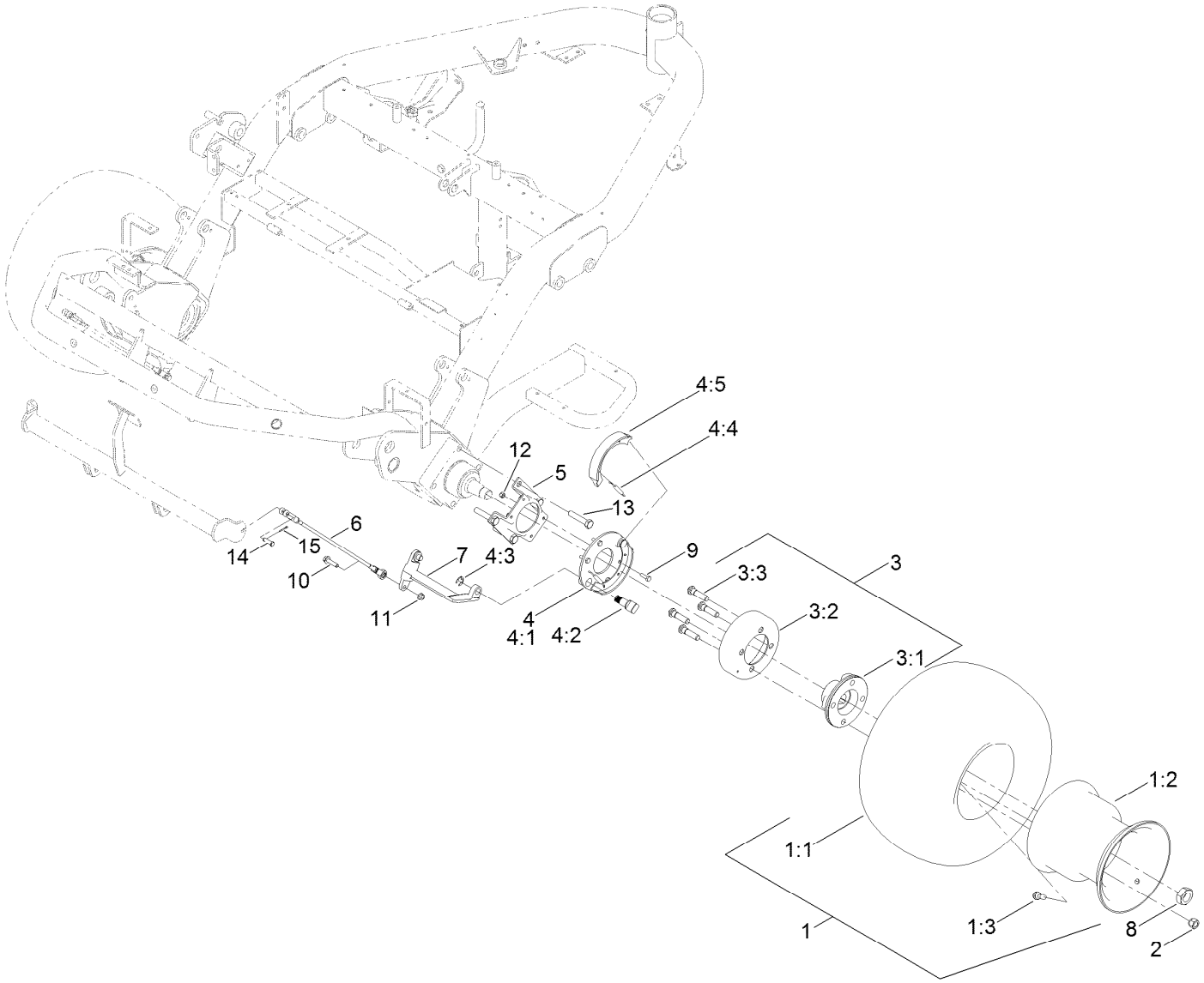


# Front Wheel and Brake Assembly

| Ref. | Part Number | Qty. | Description |
|---|---|---|---|
| 1 | 114-4665 | 2 | Tire ASM |
| 1:1 | 70-8500 | 1 | Tire-Smooth, 4-Ply |
| 1:2 | 114-4643 | 1 | Wheel |
| 1:3 | 232-27 | 1 | Stem-Valve |
| 2 | 242-50 | 8 | Nut-Lug |
| 3 | 120-5330 | 2 | Brake Drum ASM |
| 3:1 | 108-2103-03 | 1 | Hub-Wheel |
| 3:2 | 10-6850 | 1 | Drum-Brake |
| 3:3 | 117-3749 | 4 | Stud-Drive |
| 4 | 104-7705 | 2 | Brake ASM |
| 4:1 | 70-9870 | 1 | Plate-Backing |
| 4:2 | 104-7707 | 1 | Shaft-Cam, Brake |
| 4:3 | 104-7706 | 1 | E-Ring, Bowed |

| Ref. | Part Number | Qty. | Description |
|---|---|---|---|
| 4:4 | 70-9880 | 2 | Spring-Return |
| 4:5 | 70-9840 | 2 | Shoe-Brake |
| 5 | 84-2000-03 | 2 | Bracket-Brake |
| 6 | 115-6675 | 2 | Brake Rod ASM |
| 7 | 93-2096 | 2 | Lever-Brake |
| 8 | 26-3790 | 2 | Nut-Lock |
| 9 | 321-5 | 8 | Screw-HH |
| 10 | 3234-36 | 2 | Screw-HHF |
| 11 | 104-8300 | 2 | Nut-HF, NI |
| 12 | 3296-42 | 8 | Nut-Lock, NI |
| 13 | 33116-060 | 8 | Screw-HH |
| 14 | 283-61 | 2 | Pin-Yoke |
| 15 | 3272-6 | 2 | Pin-Cotter |

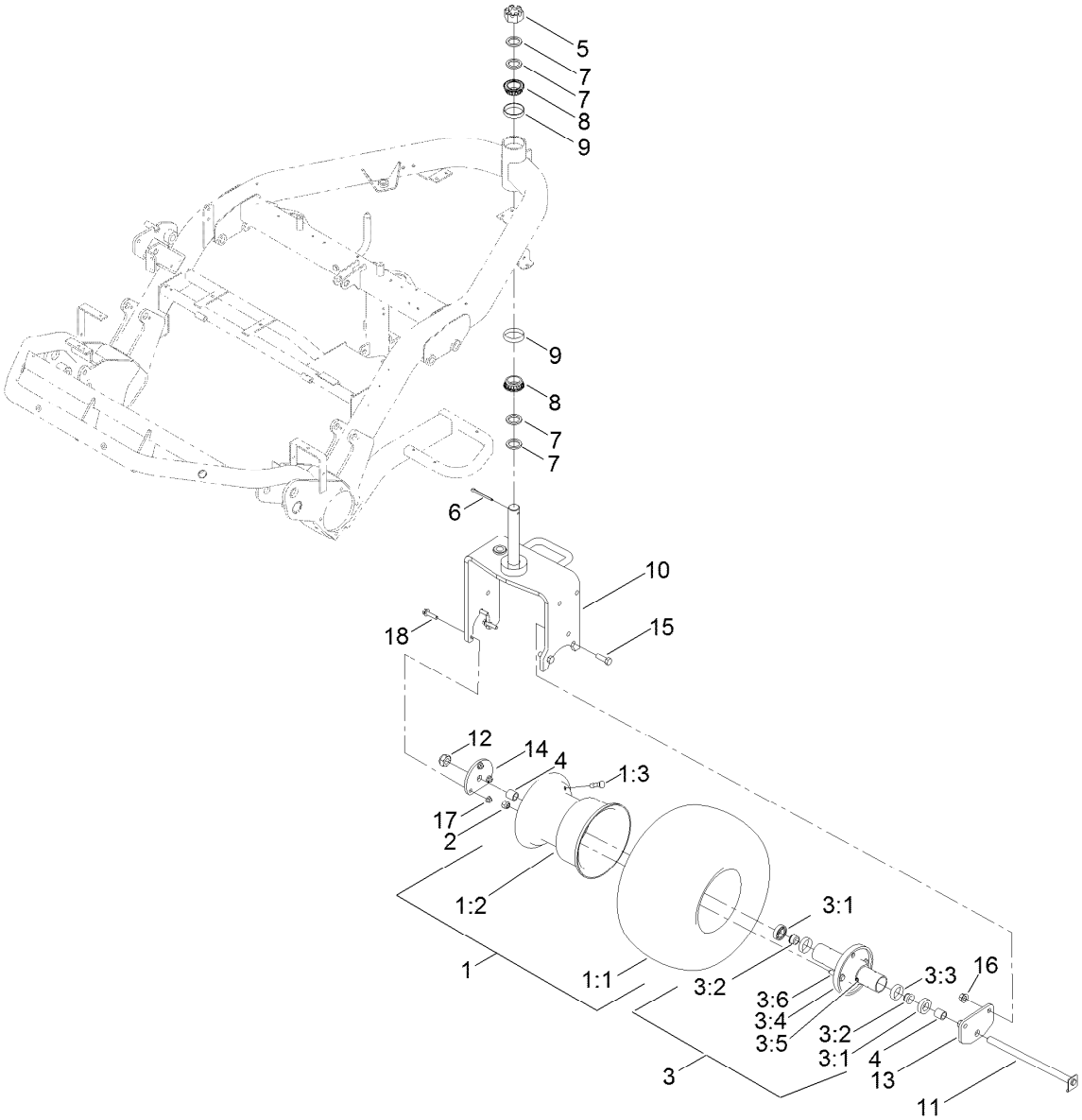


# Rear Wheel and Brake Assembly

| Ref. | Part Number | Qty. | Description |
|---|---|---|---|
| 1 | 114-4665 | 1 | Tire ASM |
| 1:1 | 70-8500 | 1 | Tire-Smooth, 4-Ply |
| 1:2 | 114-4643 | 1 | Wheel |
| 1:3 | 232-27 | 1 | Stem-Valve |
| 2 | 242-50 | 4 | Nut-Lug |
| 3 | 72-9710 | 1 | Hub-Tire |
| 3:1 | 253-111 | 2 | Seal-Oil |
| 3:2 | 254-78 | 2 | Bearing-Cone |
| 3:3 | 254-79 | 2 | Bearing-Roller, Cup |
| 3:4 | 75-9440 | 1 | Hub ASM |
| 3:5 | 302-11 | 1 | Fitting-Lube, 45 DEG |
| 3:6 | 10-6830 | 4 | Stud-Type, Drive |
| 4 | 70-8490 | 2 | Spacer-Spindle, Rear |
| 5 | 32136-9 | 1 | Nut-Hex, Slotted |

| Ref. | Part Number | Qty. | Description |
|---|---|---|---|
| 6 | 3272-37 | 1 | Pin-Cotter |
| 7 | 18-6320 | 4 | Washer-Steering |
| 8 | 115-9472 | 2 | Bearing-Cone And Seal |
| 9 | 115-9471 | 2 | Bearing-Cup |
| 10 | 112-9174-01 | 1 | Fork-Caster |
| 11 | 70-8370 | 1 | Bolt |
| 12 | 3296-67 | 1 | Nut-Lock, NI |
| 13 | 99-1485-01 | 1 | Plate-Adapter, Motor |
| 14 | 99-1486-01 | 1 | Plate-Adapter |
| 15 | 325-6 | 2 | Screw-HH |
| 16 | 99-5107 | 2 | Nut-Lock |
| 17 | 104-8301 | 3 | Nut-HF, NI |
| 18 | 114-4681 | 3 | Screw-HHF |

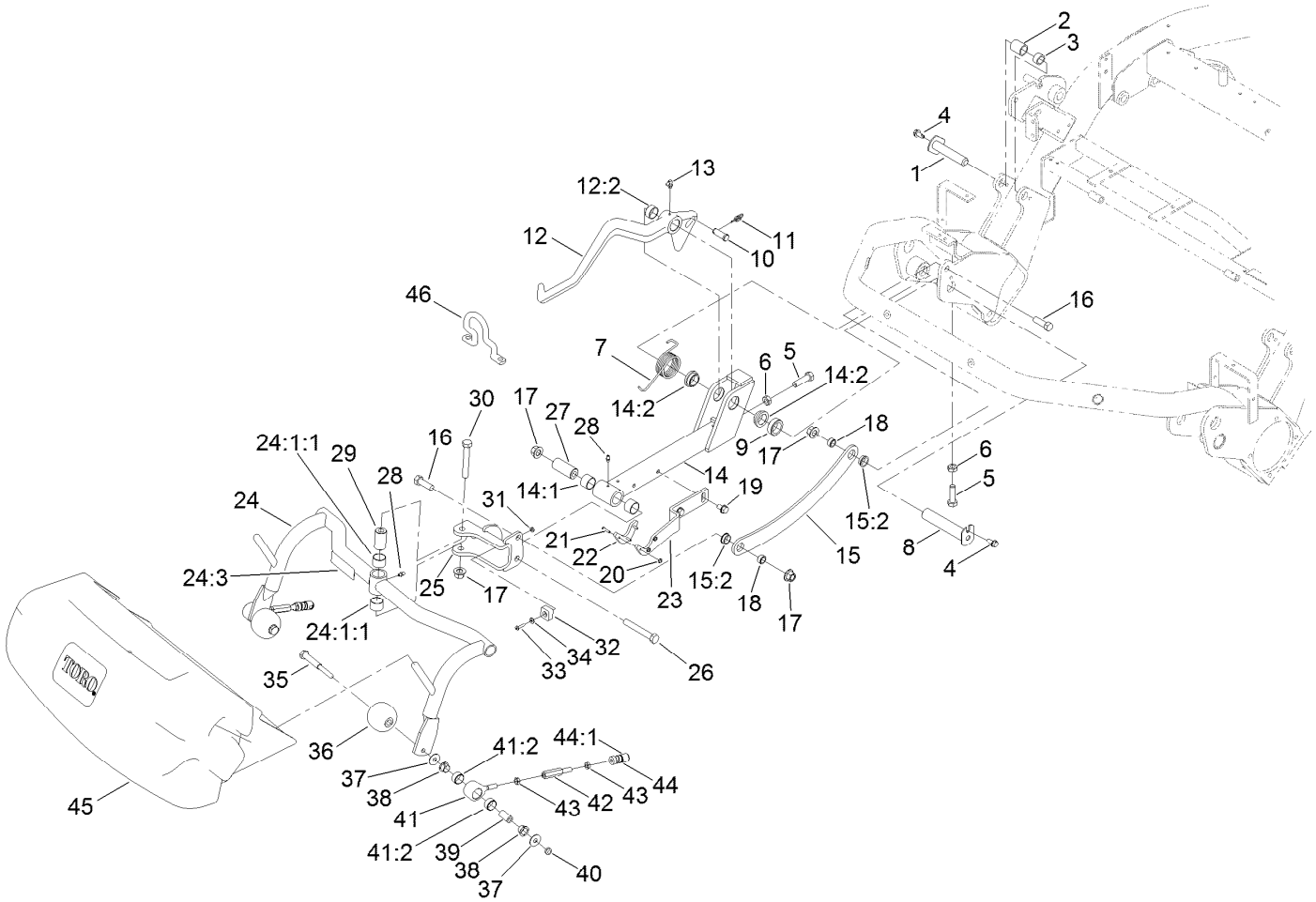


# Right Cutting Unit Suspension Assembly

| Ref. | Part Number | Qty. | Description |
|---|---|---|---|
| 1 | 120-3199 | 1 | Pin-Pivot |
| 2 | 105-3838 | 1 | Spacer |
| 3 | 74-3730 | 1 | Spacer-Spindle, Rear |
| 4 | 32104-32 | 2 | Screw-HWH |
| 5 | 325-7 | 2 | Screw-HH |
| 6 | 3218-5 | 2 | Nut-Jam |
| 7 | 105-3809 | 1 | Spring-Torsion, RH |
| 8 | 94-8198 | 1 | Pin |
| 9 | 93-2384 | 1 | Spacer-Carrier |
| 10 | 283-8 | 1 | Pin-Clevis |
| 11 | 112-1491 | 1 | Pin-Cotter |
| 12 | 99-4213 | 1 | RH Lift Arm ASM |
| 12:2 | 92-8995 | 2 | Bushing |
| 13 | 302-60 | 1 | Fitting-Grease |
| 14 | 99-4115 | 1 | Front Lift Frame ASM |
| 14:1 | 98-4166 | 2 | Bushing |
| 14:2 | 94-9610 | 2 | Bushing-Flange |
| 15 | 99-4258 | 1 | RH Link Bracket ASM |

| Ref. | Part Number | Qty. | Description |
|---|---|---|---|
| 15:2 | 99-4243 | 2 | Bushing-Flange |
| 16 | 325-6 | 2 | Screw-HH |
| 17 | 99-5107 | 4 | Nut-Lock |
| 18 | 99-4201 | 2 | Tube-Spacer |
| 19 | 32144-69 | 2 | Screw-HWHTF |
| 20 | 3296-54 | 3 | Nut-Lock |
| 21 | 3250-17 | 3 | Screw-PPH |
| 22 | 99-4225 | 1 | Pad-Wear |
| 23 | 99-4111-01 | 1 | Plate-Transport, 1 And 3 |
| 24 | 136-8577 | 1 | Pull Frame ASM |
| 24:1:1 | 98-4166 | 2 | Bushing |
| 24:3 | 104-7729 | 1 | Decal-Danger, CE |
| 25 | 99-4183-01 | 1 | RH Clevis ASM |
| 26 | 325-14 | 1 | Screw-HH |
| 27 | 99-4072 | 1 | Spacer |
| 28 | 302-5 | 2 | Fitting-Grease |
| 29 | 99-4109 | 1 | Spacer |
| 30 | 325-13 | 1 | Screw-HH |

● Not illustrated

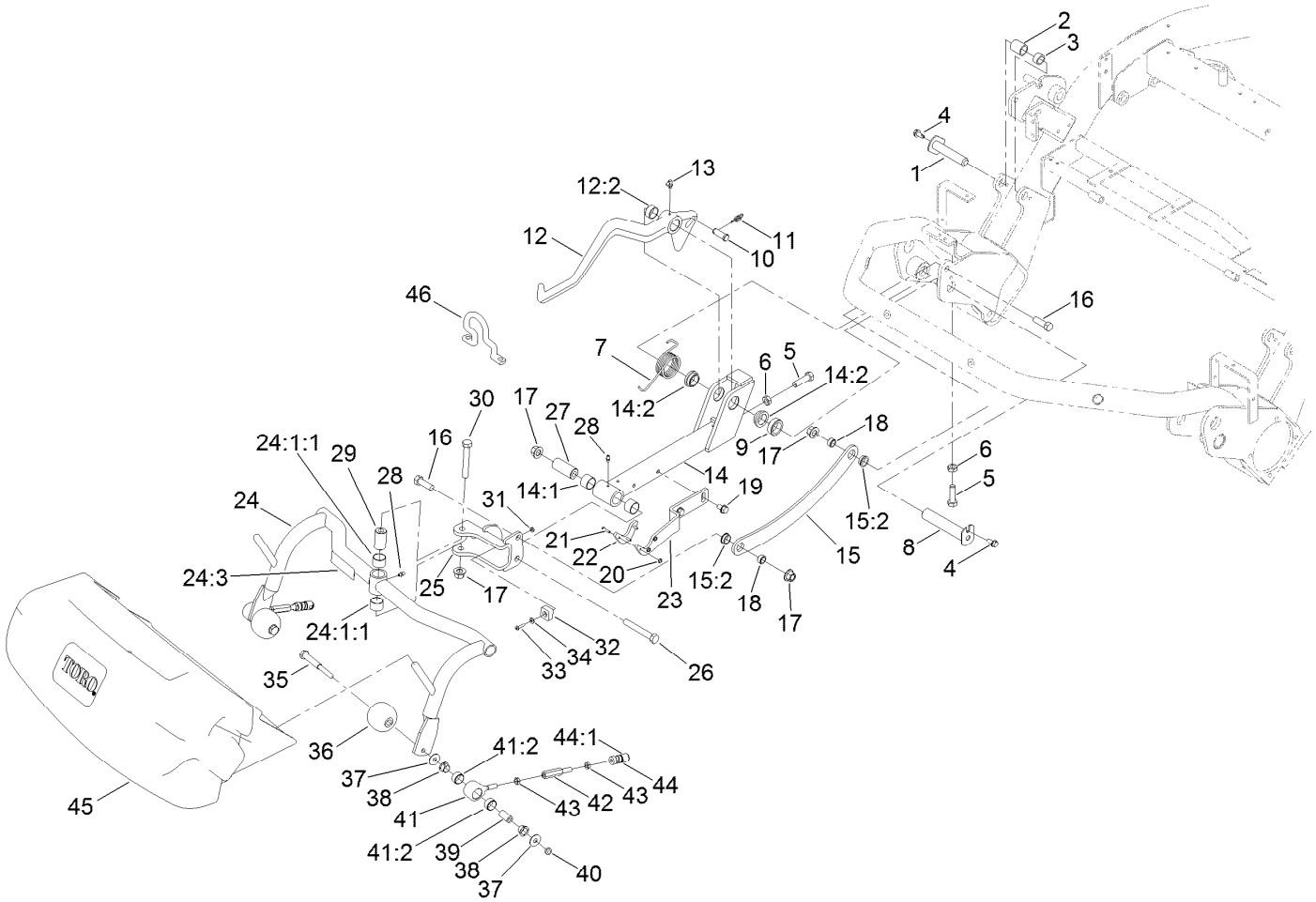


# Right Cutting Unit Suspension Assembly (continued)

| Ref. | Part Number | Qty. | Description |
|---|---|---|---|
| 31 | 3296-12 | 1 | Nut-Lock, NI |
| 32 | 94-1392 | 1 | Pad-Rubber |
| 33 | 3250-27 | 1 | Screw-PPH |
| 34 | 3256-14 | 1 | Washer-Flat |
| 35 | 108-6543 | 2 | Shaft-Roller |
| 36 | 99-4210 | 2 | Roller-Anti Scalp |
| 37 | 119-4150 | 4 | Washer-Flat |
| 38 | 104-7738 | 4 | Bushing-Flange |
| 39 | 108-6544 | 2 | Spacer |
| 40 | 3296-59 | 2 | Nut-Lock, NI |
| 41 | 108-6542 | 2 | Pull Link ASM |

| Ref. | Part Number | Qty. | Description |
|---|---|---|---|
| 41:2 | 95-0532 | 2 | Rubber Bushing ASM |
| 42 | 88-6870 | 2 | Extension-Arm, Pull |
| 43 | 3220-3 | 4 | Nut-HJ |
| 44 | 99-1460 | 2 | Ball Joint Receiver ASM |
| 44:1 | 99-1461 | 1 | Sleeve-Joint, Ball |
| 45 | 106-4689 | 1 | Grass Basket ASM |
| 45:2 | 104-2607 | 1 | Strip-Basket ● |
| 45:3 | 3290-382 | 8 | Rivet-Pop ● |
| 46 | 110-2397 | 3 | Hook-Lift, Offset (1.25 Inch, GR3250) |

● Not illustrated

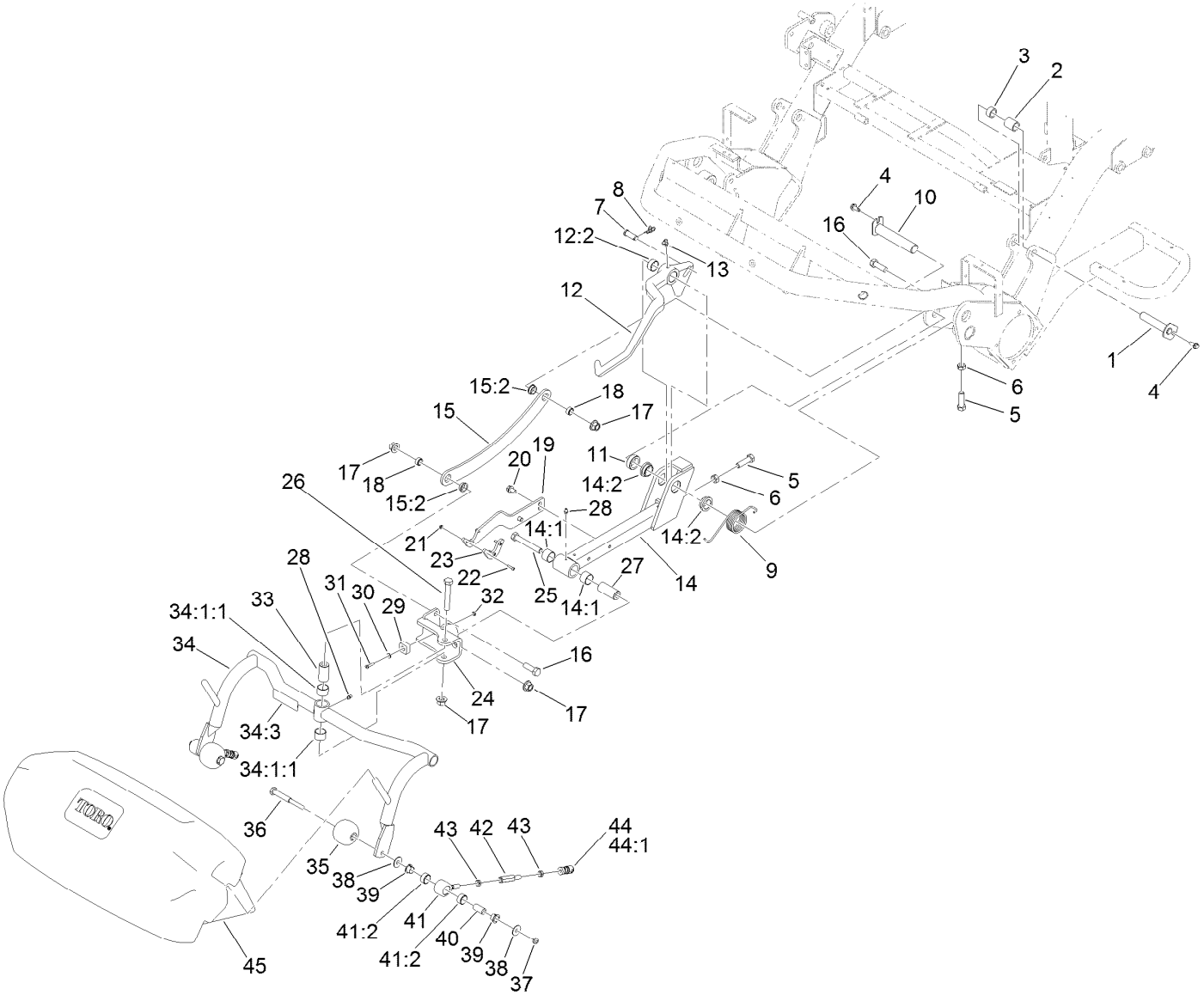


# Left Cutting Unit Suspension Assembly

| Ref. | Part Number | Qty. | Description |
|---|---|---|---|
| 1 | 120-3199 | 1 | Pin-Pivot |
| 2 | 105-3838 | 1 | Spacer |
| 3 | 74-3730 | 1 | Spacer-Spindle, Rear |
| 4 | 32104-32 | 2 | Screw-HWH |
| 5 | 325-7 | 2 | Screw-HH |
| 6 | 3218-5 | 2 | Nut-Jam |
| 7 | 283-8 | 1 | Pin-Clevis |
| 8 | 112-1491 | 1 | Pin-Cotter |
| 9 | 105-3818 | 1 | Spring-Torsion, LH |
| 10 | 94-8198 | 1 | Pin |
| 11 | 93-2384 | 1 | Spacer-Carrier |
| 12 | 99-4212 | 1 | LH Lift Arm ASM |
| 12:2 | 92-8995 | 2 | Bushing |
| 13 | 302-60 | 1 | Fitting-Grease |
| 14 | 99-4115 | 1 | Front Lift Frame ASM |
| 14:1 | 98-4166 | 2 | Bushing |
| 14:2 | 94-9610 | 2 | Bushing-Flange |
| 15 | 99-4260 | 1 | LH Link Bracket ASM |

| Ref. | Part Number | Qty. | Description |
|---|---|---|---|
| 15:2 | 99-4243 | 2 | Bushing-Flange |
| 16 | 325-6 | 2 | Screw-HH |
| 17 | 99-5107 | 4 | Nut-Lock |
| 18 | 99-4201 | 2 | Tube-Spacer |
| 19 | 99-4112-01 | 1 | Plate-Transport, #2 |
| 20 | 32144-69 | 2 | Screw-HWHTF |
| 21 | 3296-54 | 3 | Nut-Lock |
| 22 | 3250-17 | 3 | Screw-PPH |
| 23 | 99-4225 | 1 | Pad-Wear |
| 24 | 99-4182-01 | 1 | LH Clevis ASM |
| 25 | 325-14 | 1 | Screw-HH |
| 26 | 325-13 | 1 | Screw-HH |
| 27 | 99-4072 | 1 | Spacer |
| 28 | 302-5 | 2 | Fitting-Grease |
| 29 | 94-1392 | 1 | Pad-Rubber |
| 30 | 3256-14 | 1 | Washer-Flat |
| 31 | 3250-27 | 1 | Screw-PPH |
| 32 | 3296-12 | 1 | Nut-Lock, NI |

● Not illustrated

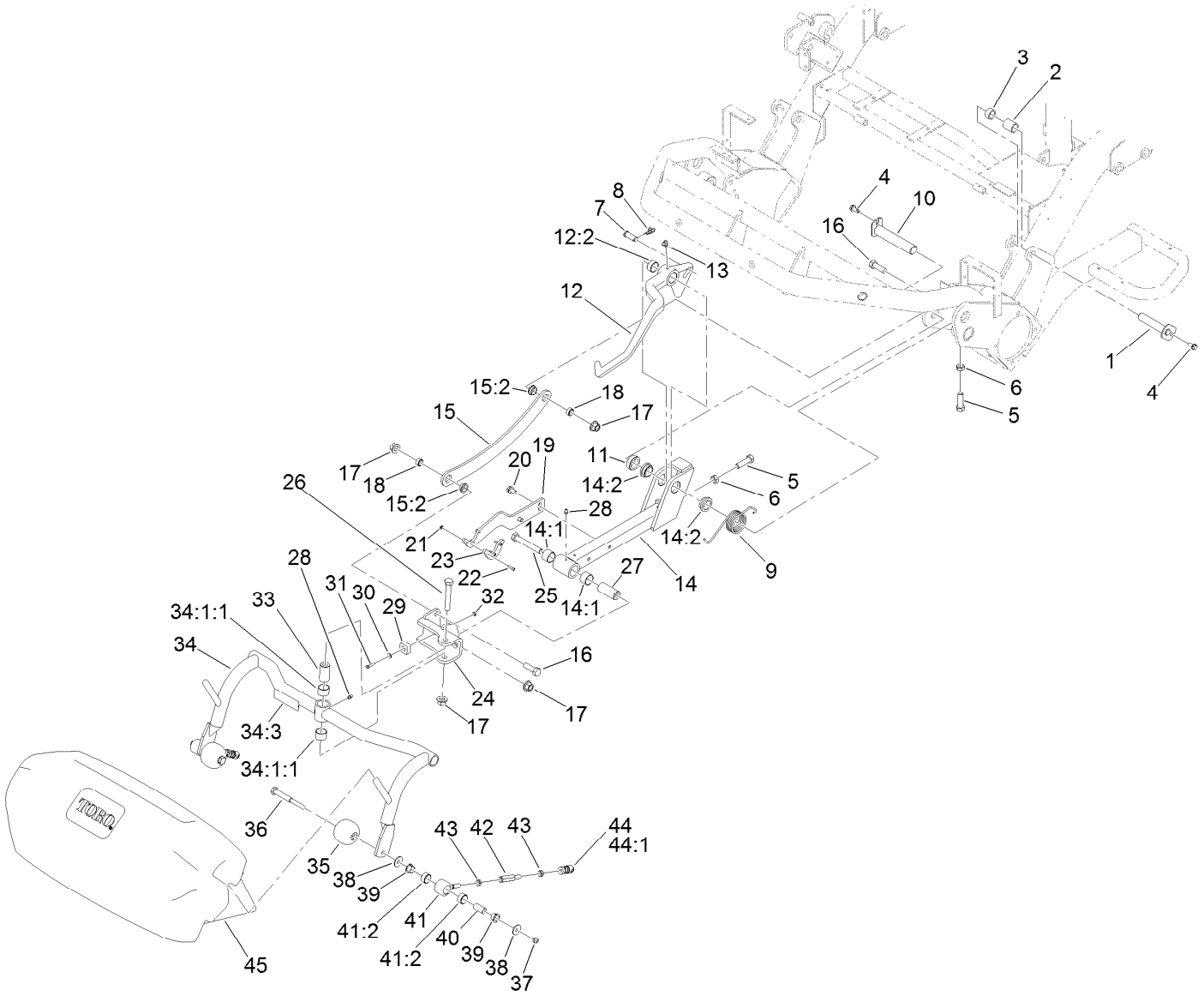


# Left Cutting Unit Suspension Assembly (continued)

| Ref. | Part Number | Qty. | Description |
|---|---|---|---|
| 33 | 99-4109 | 1 | Spacer |
| 34 | 136-8577 | 1 | Pull Frame ASM |
| 34:1:1 | 98-4166 | 2 | Bushing |
| 34:3 | 104-7729 | 1 | Decal-Danger, CE |
| 35 | 99-4210 | 2 | Roller-Anti Scalp |
| 36 | 108-6543 | 2 | Shaft-Roller |
| 37 | 3296-59 | 2 | Nut-Lock, NI |
| 38 | 119-4150 | 4 | Washer-Flat |
| 39 | 104-7738 | 4 | Bushing-Flange |
| 40 | 108-6544 | 2 | Spacer |

| Ref. | Part Number | Qty. | Description |
|---|---|---|---|
| 41 | 108-6542 | 2 | Pull Link ASM |
| 41:2 | 95-0532 | 2 | Rubber Bushing ASM |
| 42 | 88-6870 | 2 | Extension-Arm, Pull |
| 43 | 3220-3 | 4 | Nut-HJ |
| 44 | 99-1460 | 2 | Ball Joint Receiver ASM |
| 44:1 | 99-1461 | 1 | Sleeve-Joint, Ball |
| 45 | 106-4689 | 1 | Grass Basket ASM |
| 45:2 | 104-2607 | 1 | Strip-Basket ● |
| 45:3 | 3290-382 | 8 | Rivet-Pop ● |

● Not illustrated

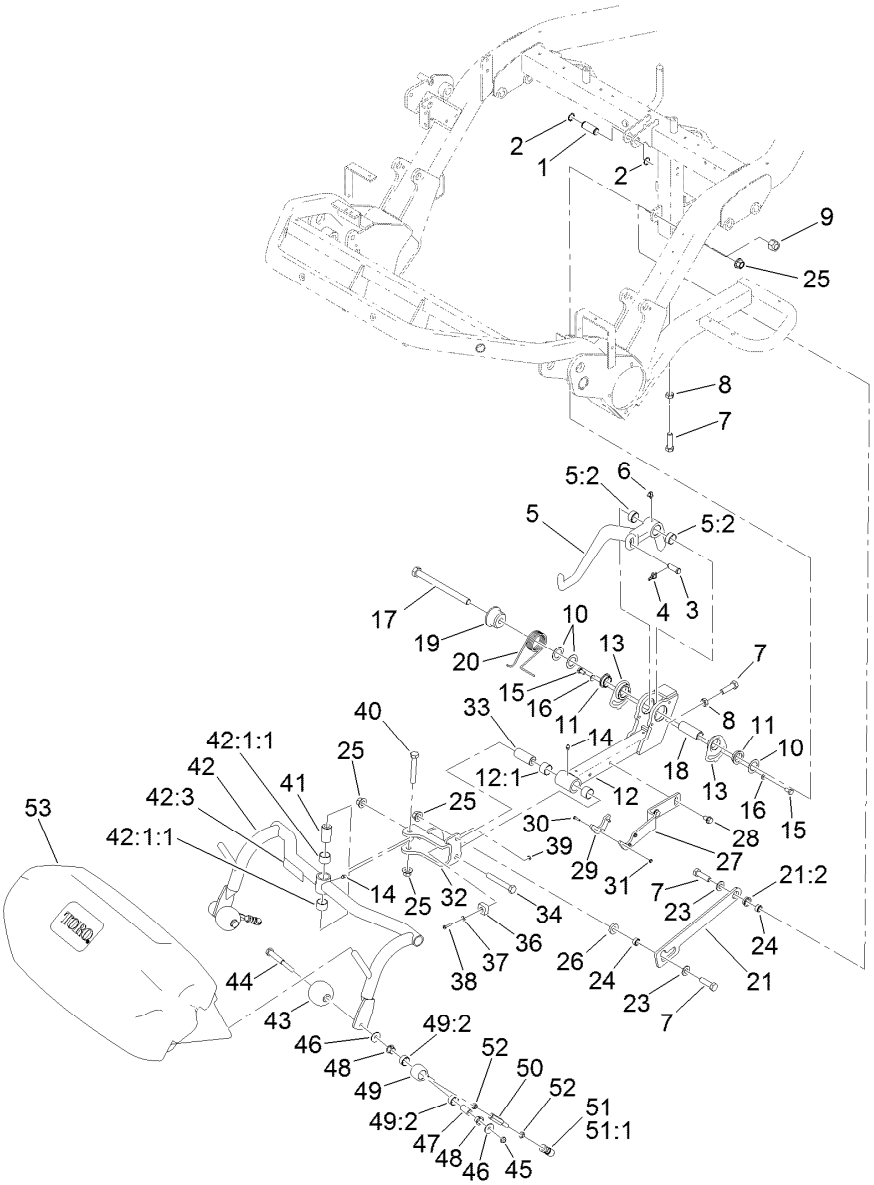


# Center Cutting Unit Suspension Assembly

| Ref. | Part Number | Qty. | Description |
|---|---|---|---|
| 1 | 94-3452 | 1 | Pin |
| 2 | 32120-72 | 2 | Ring-Snap |
| 3 | 283-8 | 1 | Pin-Clevis |
| 4 | 112-1491 | 1 | Pin-Cotter |
| 5 | 99-4126 | 1 | Center Lift Arm ASM |
| 5:2 | 92-8995 | 2 | Bushing |
| 6 | 302-60 | 1 | Fitting-Grease |
| 7 | 325-7 | 4 | Screw-HH |
| 8 | 3218-5 | 2 | Nut-Jam |
| 9 | 3296-53 | 1 | Nut-Lock, NI |
| 10 | 63-2290 | 3 | Washer-Thrust |
| 11 | 98-2197 | 2 | Bushing-Flange |
| 12 | 99-4116 | 1 | Rear Lift Frame ASM |
| 12:1 | 98-4166 | 2 | Bushing |
| 13 | 125-5222 | 2 | Bushing-Eccentric, Machined |
| 14 | 302-5 | 2 | Fitting-Grease |
| 15 | 33114-016 | 2 | Screw-HH |
| 16 | 3256-74 | 2 | Washer-Flat |
| 17 | 327-25 | 1 | Screw-HH |
| 18 | 94-8199 | 1 | Tube-Pivot |
| 19 | 105-9779 | 1 | Guide-Spring |
| 20 | 105-9781 | 1 | Spring-Torsion |
| 21 | 99-4246 | 1 | Link Bracket ASM |
| 21:2 | 99-4243 | 1 | Bushing-Flange |
| 23 | 3256-26 | 2 | Washer-Flat |
| 24 | 99-4201 | 2 | Tube-Spacer |
| 25 | 99-5107 | 4 | Nut-Lock |
| 26 | 99-4248 | 1 | Spacer |
| 27 | 99-4111-01 | 1 | Plate-Transport, 1 And 3 |
| 28 | 32144-69 | 2 | Screw-HWHTF |
| 29 | 99-4225 | 1 | Pad-Wear |
| 30 | 3250-17 | 3 | Screw-PPH |
| 31 | 3296-54 | 3 | Nut-Lock |
| 32 | 99-4183-01 | 1 | RH Clevis ASM |
| 33 | 99-4072 | 1 | Spacer |

● Not illustrated

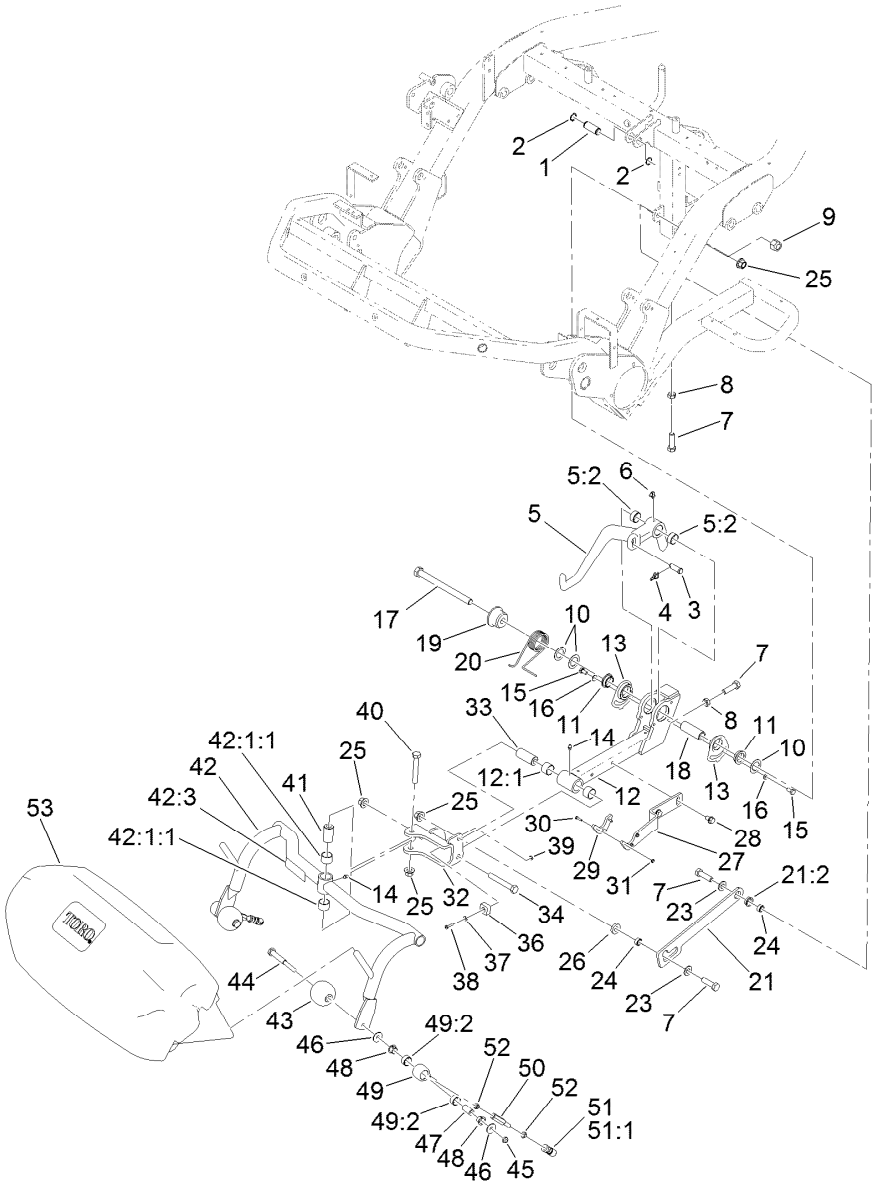


# Center Cutting Unit Suspension Assembly (continued)

| Ref. | Part Number | Qty. | Description |
|---|---|---|---|
| 34 | 325-14 | 1 | Screw-HH |
| 36 | 94-1392 | 1 | Pad-Rubber |
| 37 | 3256-14 | 1 | Washer-Flat |
| 38 | 3250-27 | 1 | Screw-PPH |
| 39 | 3296-12 | 1 | Nut-Lock, NI |
| 40 | 325-13 | 1 | Screw-HH |
| 41 | 99-4109 | 1 | Spacer |
| 42 | 136-8577 | 1 | Pull Frame ASM |
| 42:1:1 | 98-4166 | 2 | Bushing |
| 42:3 | 104-7729 | 1 | Decal-Danger, CE |
| 43 | 99-4210 | 2 | Roller-Anti Scalp |
| 44 | 108-6543 | 2 | Shaft-Roller |
| 45 | 3296-59 | 2 | Nut-Lock, NI |

| Ref. | Part Number | Qty. | Description |
|---|---|---|---|
| 46 | 119-4150 | 4 | Washer-Flat |
| 47 | 108-6544 | 2 | Spacer |
| 48 | 104-7738 | 4 | Bushing-Flange |
| 49 | 108-6542 | 2 | Pull Link ASM |
| 49:2 | 95-0532 | 2 | Rubber Bushing ASM |
| 50 | 88-6870 | 2 | Extension-Arm, Pull |
| 51 | 99-1460 | 2 | Ball Joint Receiver ASM |
| 51:1 | 99-1461 | 1 | Sleeve-Joint, Ball |
| 52 | 3220-3 | 4 | Nut-HJ |
| 53 | 106-4689 | 1 | Grass Basket ASM |
| 53:2 | 104-2607 | 1 | Strip-Basket ● |
| 53:3 | 3290-382 | 8 | Rivet-Pop ● |

● Not illustrated

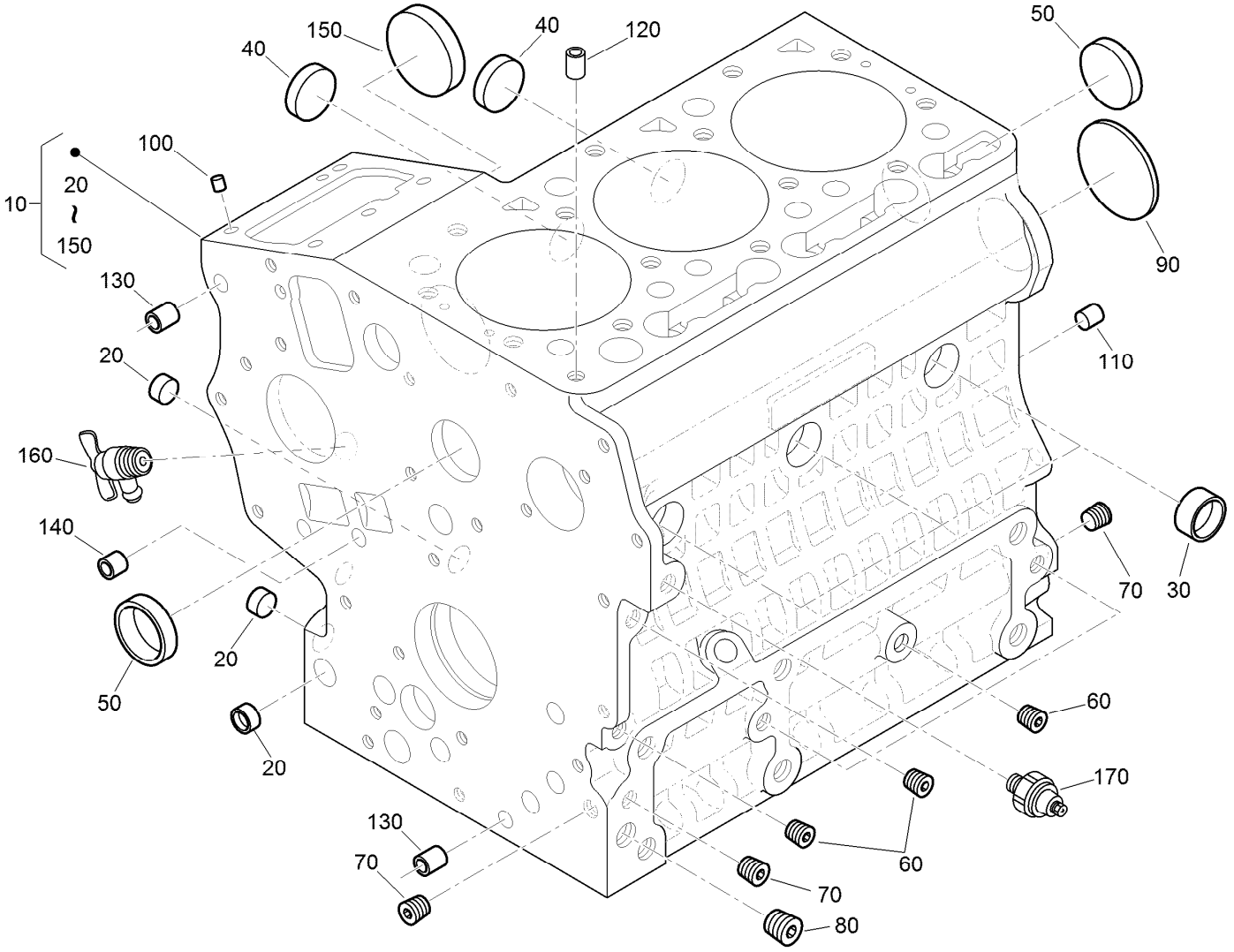


# Crankcase Assembly

| Ref. | Part Number | Qty. | Description |
|---|---|---|---|
| 10 | 130-1385 | 1 | Crankcase ASM |
| 20 | 100-2019 | 3 | Cap-Sealing |
| 30 | 100-2020 | 3 | Cap-Sealing |
| 40 | 110-3702 | 2 | Cap-Sealing |
| 50 | 98-9398 | 2 | Cap-Sealing |
| 60 | 98-9687 | 5 | Plug |
| 70 | 98-7487 | 3 | Plug |
| 80 | 98-7488 | 1 | Plug |
| 90 | 100-1851 | 1 | Plug-Expansion |

| Ref. | Part Number | Qty. | Description |
|---|---|---|---|
| 100 | 98-9375 | 2 | Pin-Straight |
| 110 | 98-9377 | 2 | Pin-Straight |
| 120 | 98-7506 | 1 | Pin-Pipe |
| 130 | 100-2051 | 2 | Pin-Pipe |
| 140 | 100-2051 | 2 | Pin-Pipe |
| 150 | 100-1991 | 1 | Cover-Fuel, Camshaft |
| 160 | 120-3121 | 1 | Draincock ASM |
| 170 | 98-7764 | 1 | Switch-Oil |

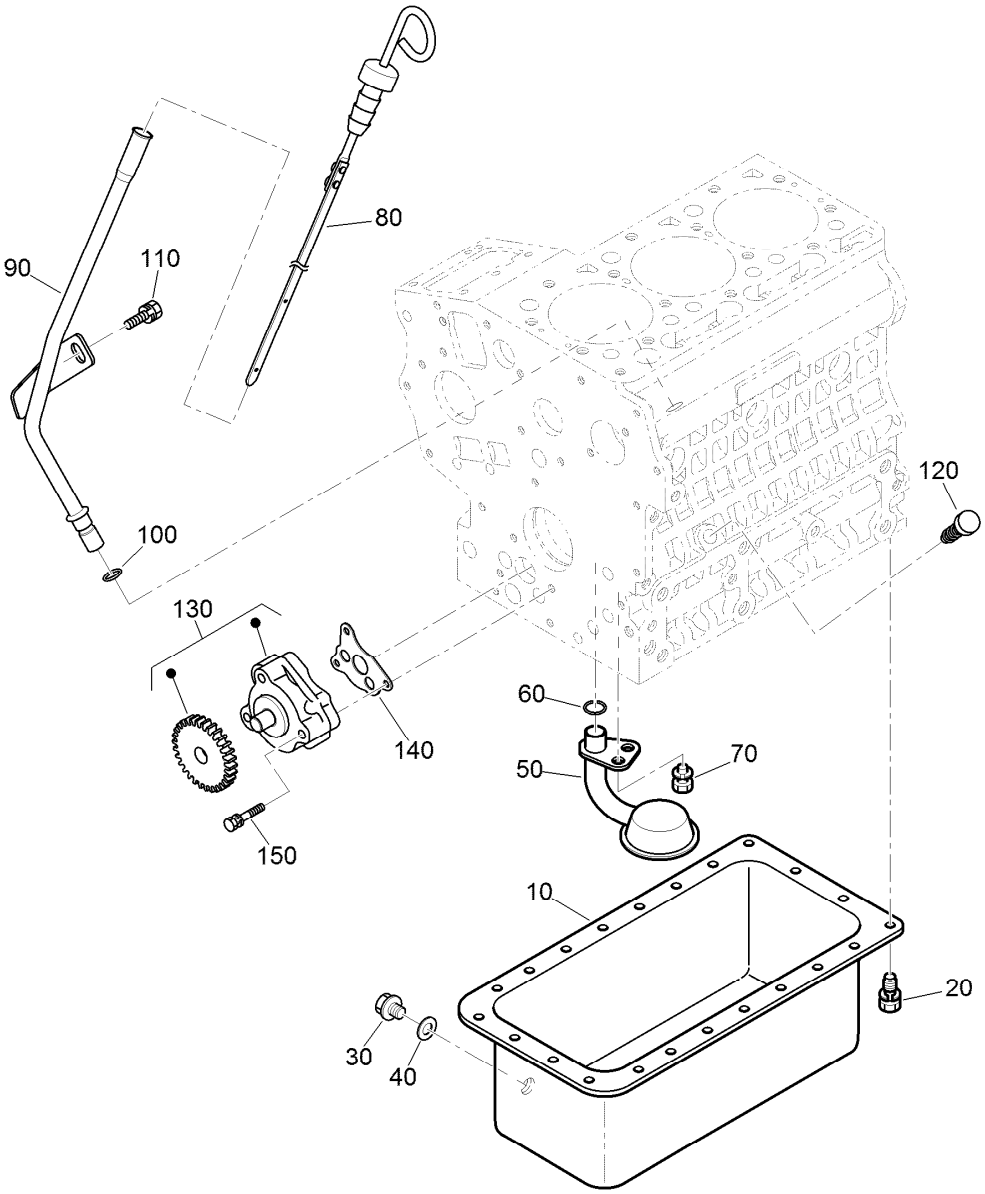


# Oil Pan, Oil Pump and Dipstick Assembly

| *Ref.* | *Part Number* | *Qty.* | *Description* |
|---|---|---|---|
| 10 | 120-3122 | 1 | Oil Pan ASM |
| 20 | 98-9350 | 22 | Bolt |
| 30 | 114-8151 | 1 | Plug-Drain |
| 40 | 98-7524 | 1 | Gasket |
| 50 | 100-2001 | 1 | Strainer-Pickup, Oil |
| 60 | 105-3776 | 1 | O-Ring |
| 70 | 100-9195 | 1 | Bolt |
| 80 | 120-3124 | 1 | Gauge-Oil |
| 90 | 120-3125 | 1 | Guide-Gauge, Oil |
| 100 | 98-9722 | 1 | O-Ring |
| 110 | 115-8504 | 1 | Bolt-Flange |
| 120 | 110-3720 | 1 | Plug-Gauge, Oil |
| 130 | 121-2407 | 1 | Oil Pump ASM |
| 140 | 121-2408 | 1 | Gasket-Pump, Oil |
| 150 | 100-1923 | 3 | Bolt |

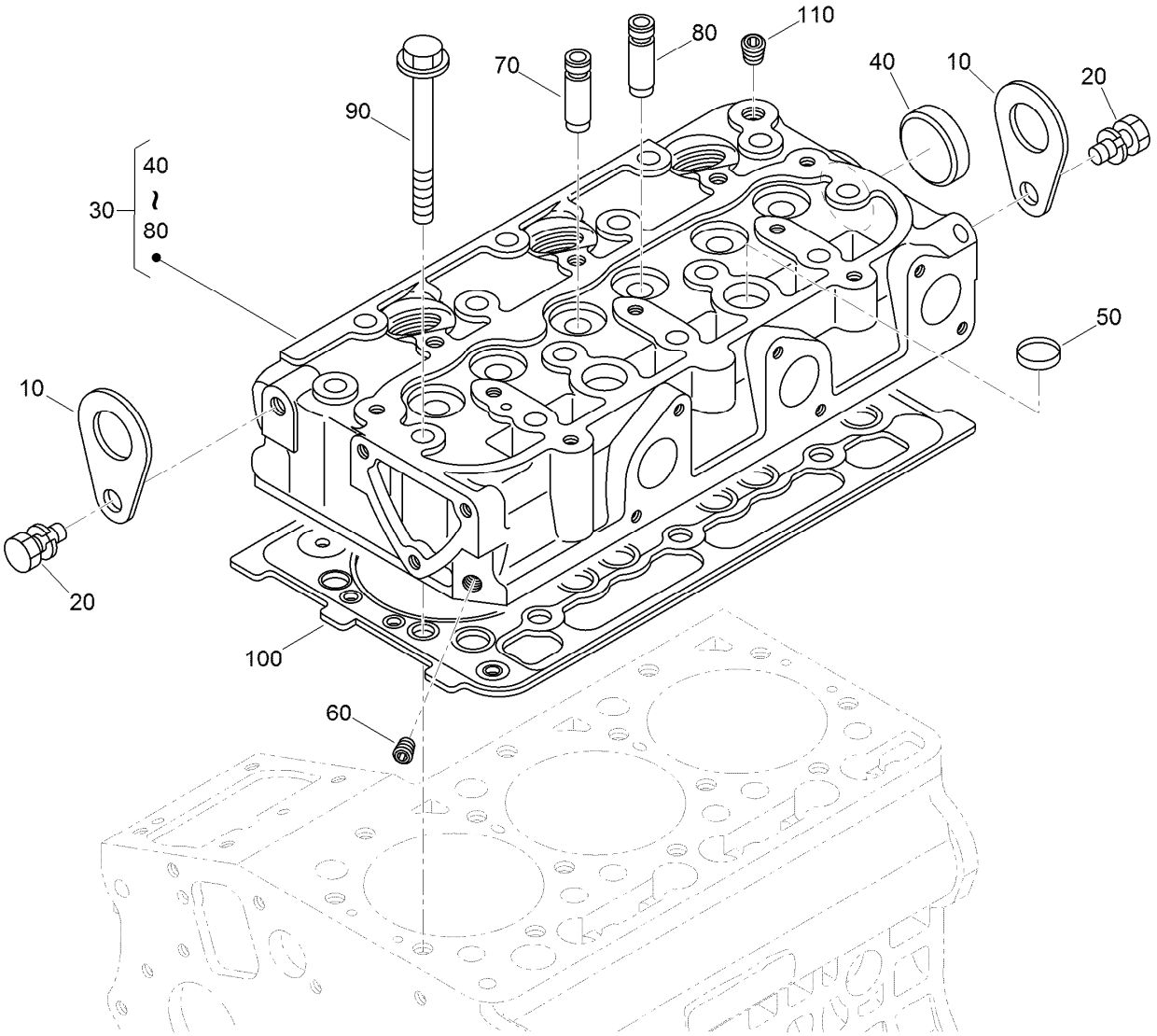


# Cylinder Head Assembly

| *Ref.* | *Part Number* | *Qty.* | *Description* |
|---|---|---|---|
| 10 | 98-7531 | 2 | Hook-Engine |
| 20 | 98-7526 | 2 | Bolt |
| 30 | 130-1504 | 1 | Cylinder Head ASM |
| 40 | 105-3705 | 1 | Cap-Sealing |
| 50 | 98-9389 | 2 | Cap-Sealing |
| 60 | 98-9687 | 1 | Plug |
| 70 | 100-1882 | 3 | Guide-Valve, Inlet |
| 80 | 100-1883 | 3 | Guide-Valve, Exhaust |
| 90 | 100-1820 | 14 | Bolt-Head, Cylinder |
| 100 | 112-2520 | 1 | Gasket-Head, Cylinder |
| 110 | 98-9444 | 1 | Plug |

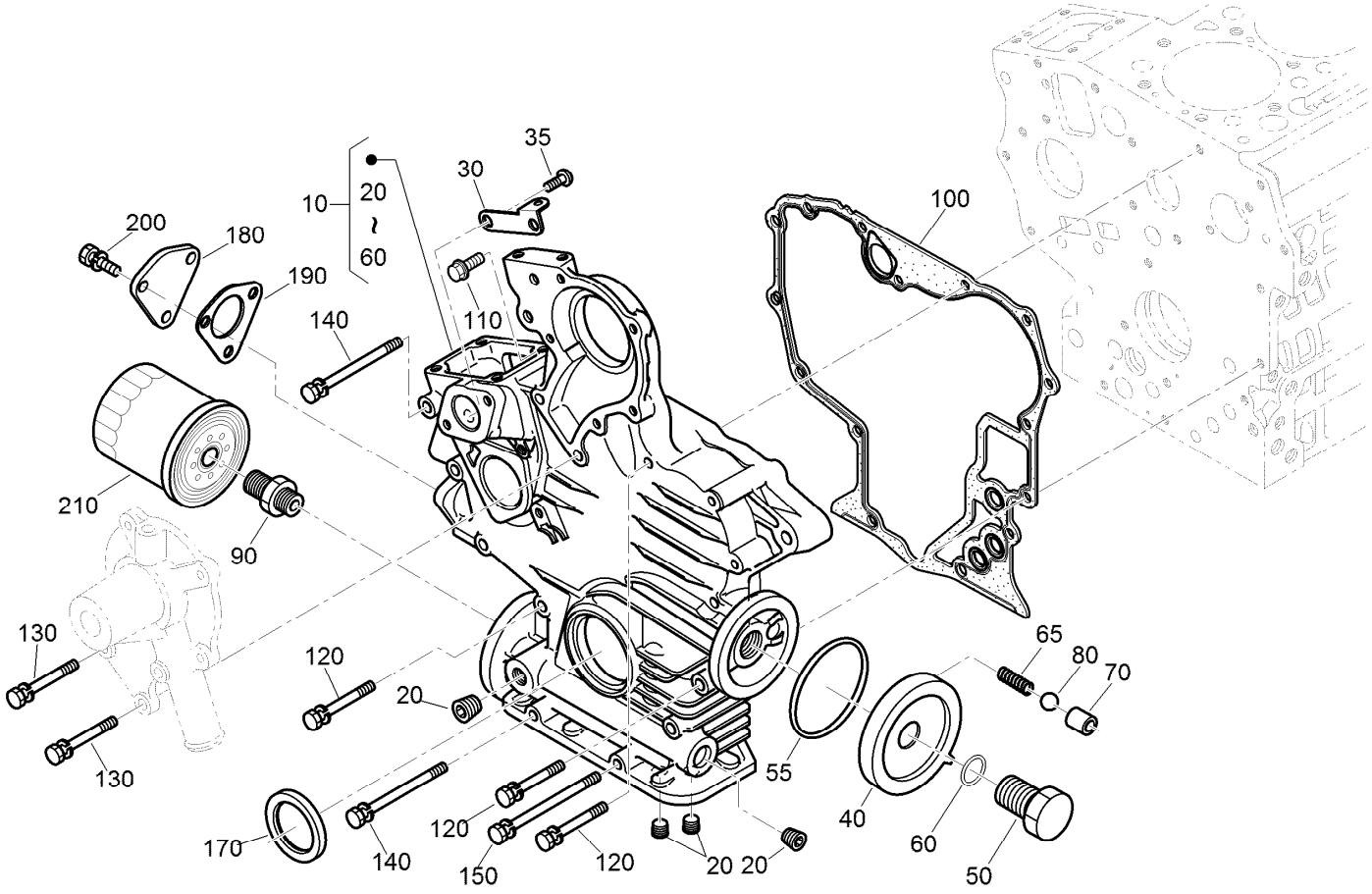


# Gear Case and Oil Filter Cartridge Assembly

| Ref. | Part Number | Qty. | Description |
|---|---|---|---|
| 10 | 121-2401 | 1 | Gearcase ASM |
| 20 | 98-7488 | 4 | Plug |
| 30 | 110-3708 | 1 | Stay-Spring, Start |
| 35 | 100-2040 | 2 | Screw |
| 40 | 121-2402 | 1 | Cover |
| 50 | 121-2403 | 1 | Bolt |
| 55 | 98-9729 | 1 | O-Ring |
| 60 | 105-3777 | 1 | O-Ring |
| 65 | 100-2004 | 1 | Spring |
| 70 | 100-1894 | 1 | Seat-Valve |
| 80 | 100-1792 | 1 | Ball |
| 90 | 98-9388 | 1 | Joint-Pipe |

| Ref. | Part Number | Qty. | Description |
|---|---|---|---|
| 100 | 121-2404 | 1 | Gasket-Gearcase |
| 110 | 127-0403 | 1 | Bolt-Flange |
| 120 | 125-9063 | 8 | Bolt-Sems |
| 130 | 100-1922 | 2 | Bolt |
| 140 | 98-9357 | 3 | Bolt |
| 150 | 110-3710 | 1 | Bolt |
| 170 | 120-7852 | 1 | Seal-Oil |
| 180 | 121-2405 | 1 | Cover |
| 190 | 121-2406 | 1 | Packing-Flange |
| 200 | 98-7605 | 3 | Bolt |
| 210 | 115-8189 | 1 | Filter-Oil, Engine |

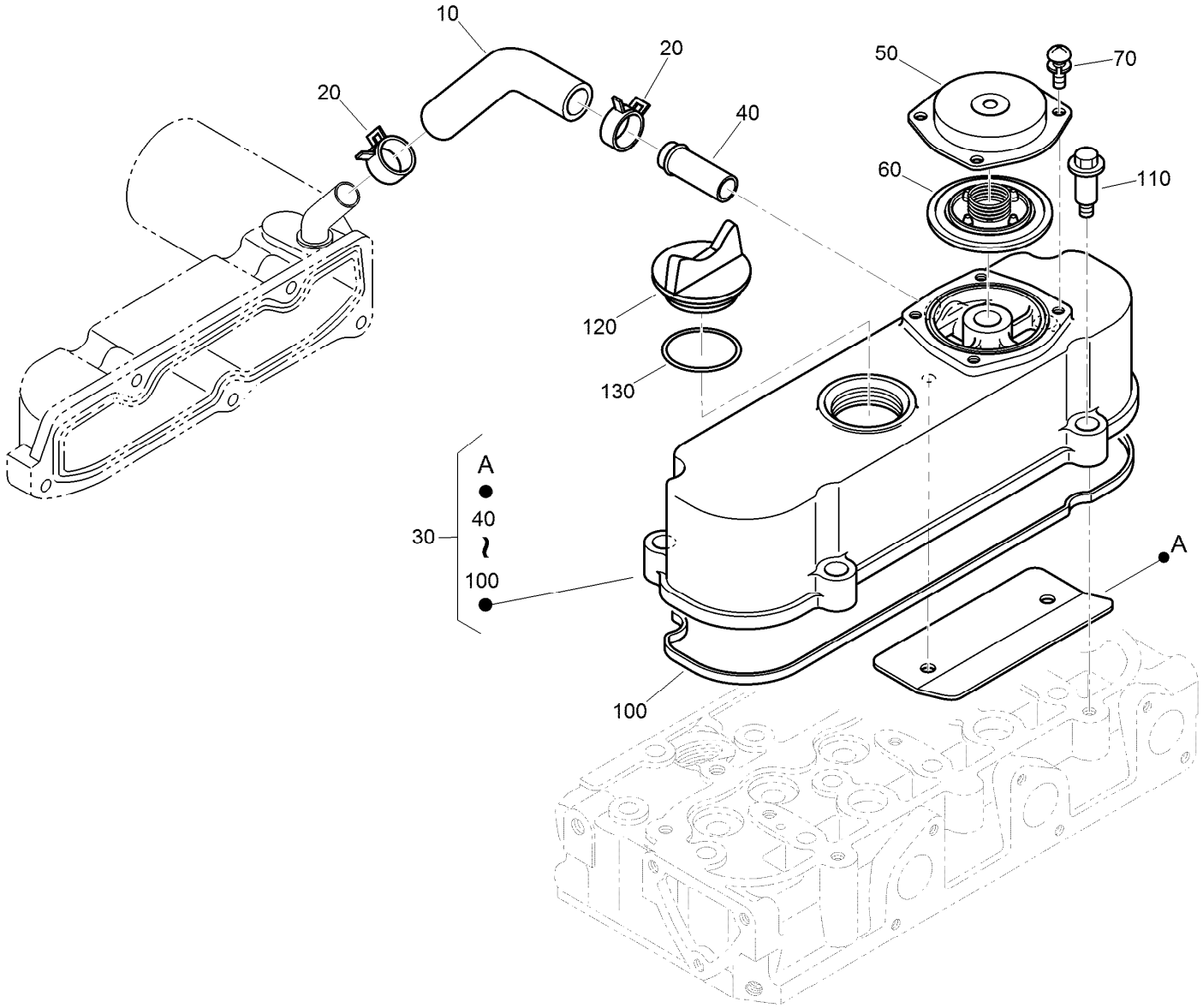


# Cylinder Head Cover Assembly

| Ref. | Part Number | Qty. | Description |
|---|---|---|---|
| 10 | 120-3139 | 1 | Tube-Breather |
| 20 | 110-3712 | 2 | Clamp-Hose |
| 30 | 112-8332 | 1 | Cylinder Head Cover ASM |
| 40 | 98-9580 | 1 | Pipe-Return, Water |
| 50 | 110-3714 | 1 | Cover-Breather |
| 60 | 110-3715 | 1 | Valve-Breather |
| 70 | 98-9364 | 4 | Screw (With Washer) |
| 100 | 112-2521 | 1 | Gasket-Cover, Head |
| 110 | 108-7063 | 4 | Bolt |
| 120 | 107-9075 | 1 | Plug-Filler, Oil |
| 130 | 99-3446 | 1 | O-Ring |

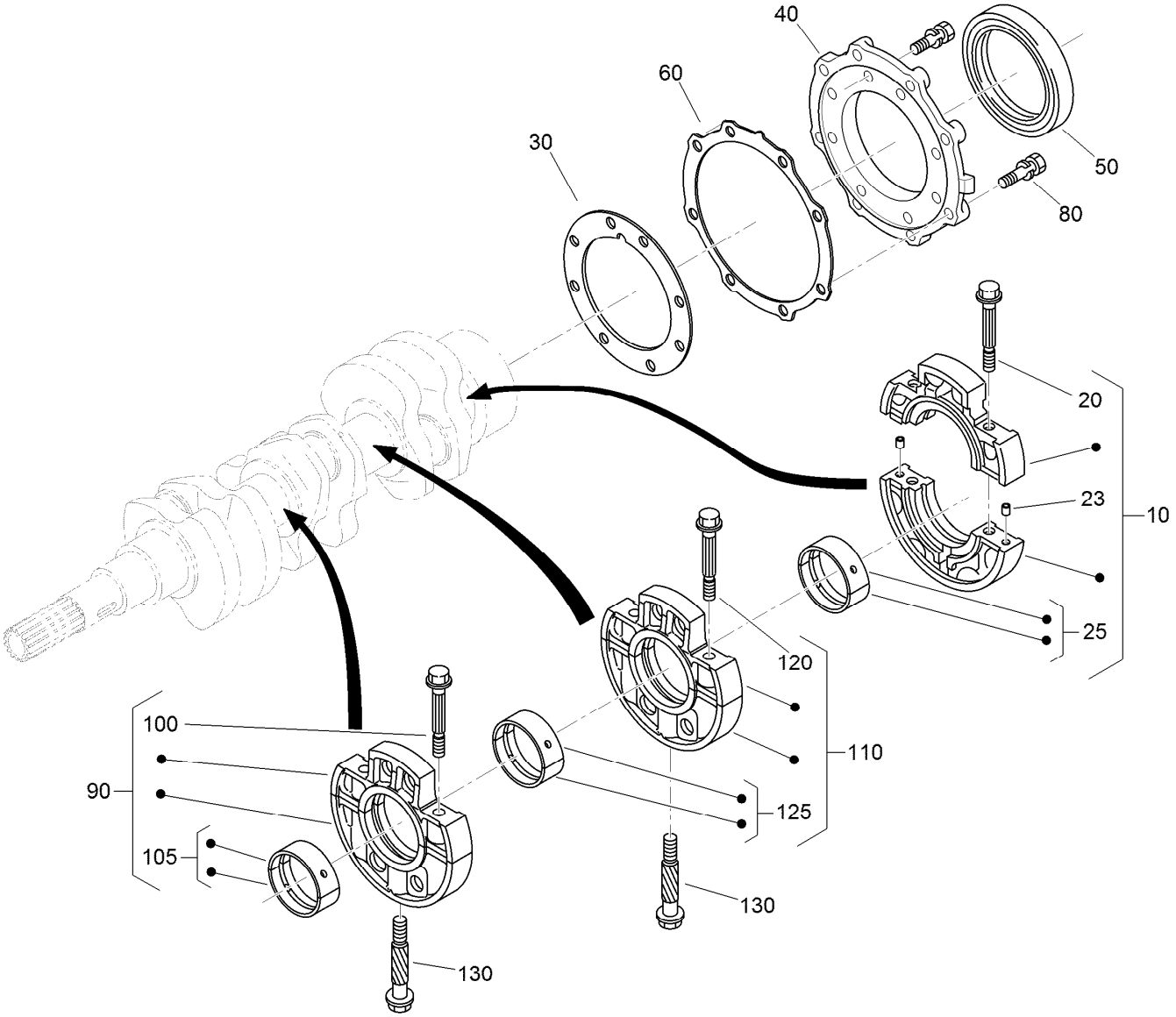


# Main Bearing Case Assembly

| Ref. | Part Number | Qty. | Description |
|---|---|---|---|
| 10 | 125-9064 | 1 | Wheel Bearing Case ASM |
| 20 | 125-9065 | 2 | Bolt-Flange |
| 23 | 125-9082 | 2 | Pin-Straight |
| 25 | 125-9066 | 1 | Crankshaft Metal ASM (STD) |
| 25 | 125-9067 | 1 | Crankshaft Metal ASM (-0.20Mm) |
| 25 | 125-9068 | 1 | Crankshaft Metal ASM (-0.40Mm) |
| 30 | 100-1873 | 1 | Gasket-Case, Bearing |
| 40 | 112-8334 | 1 | Cover-Case, Bearing |
| 50 | 110-3724 | 1 | Seal-Oil |
| 60 | 100-1876 | 1 | Gasket-Cover, Case |
| 80 | 100-1750 | 16 | Bolt |
| 90 | 110-3725 | 1 | Main Bearing Case ASM |
| 100 | 110-3723 | 2 | Bolt-Case, Bearing |

| Ref. | Part Number | Qty. | Description |
|---|---|---|---|
| 105 | 110-3741 | 1 | Crankshaft Metal ASM (STD) |
| 105 | 125-9083 | 1 | Crankshaft Metal ASM (-0.20Mm) |
| 105 | 110-3743 | 1 | Crankshaft Metal ASM (-0.40Mm) |
| 110 | 125-9069 | 1 | Main Case Bearing ASM |
| 120 | 110-3723 | 2 | Bolt-Case, Bearing |
| 125 | 110-3741 | 1 | Crankshaft Metal ASM (STD) |
| 125 | 125-9083 | 1 | Crankshaft Metal ASM (-0.20Mm) |
| 125 | 110-3743 | 1 | Crankshaft Metal ASM (-0.40Mm) |
| 130 | 100-1874 | 2 | Bolt-Case, Bearing |

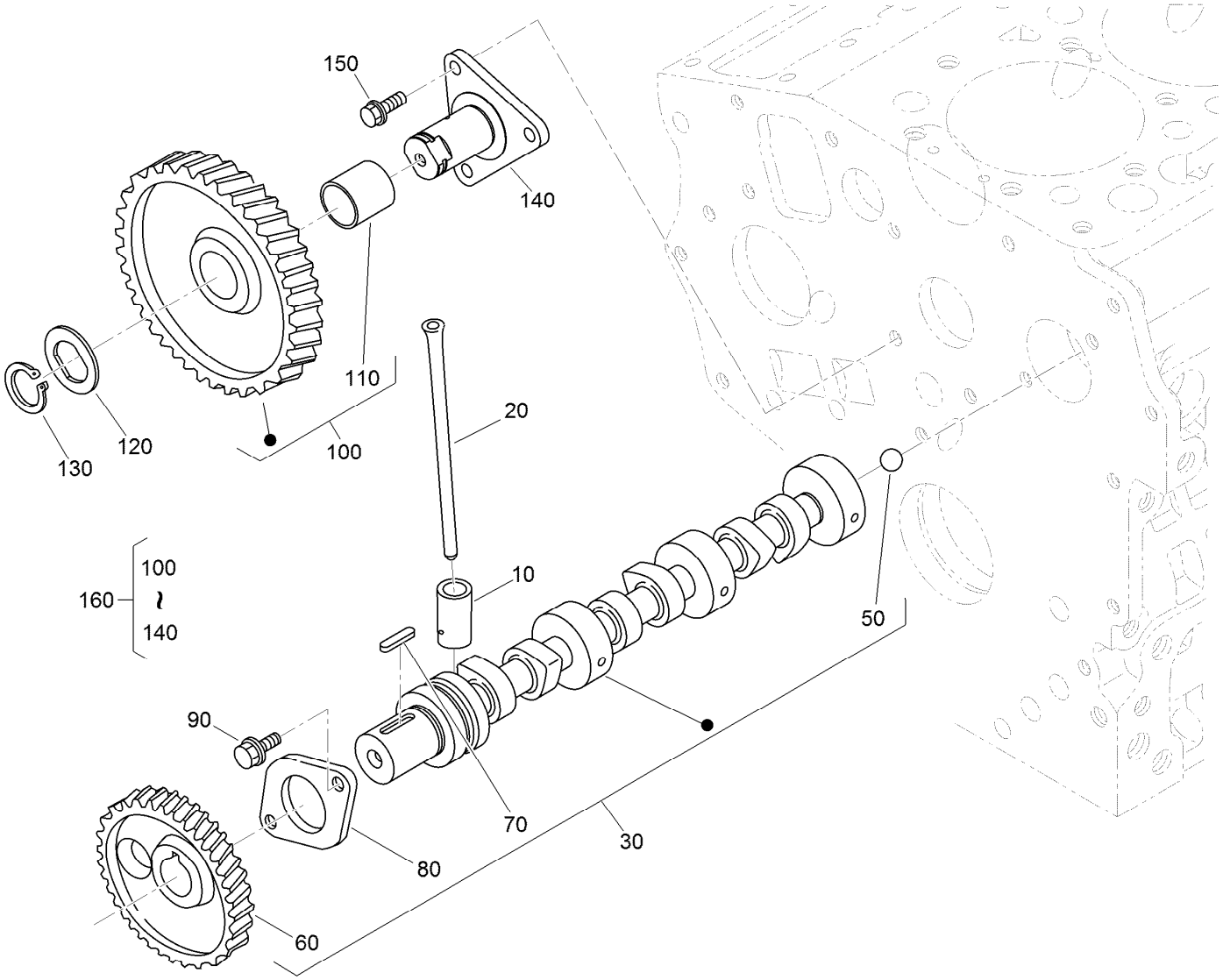


# Camshaft and Idle Gear Shaft Assembly

| *Ref.* | *Part Number* | *Qty.* | *Description* |
|---|---|---|---|
| 10 | 110-3727 | 6 | Tappet |
| 20 | 100-1989 | 6 | Rod-Push |
| 30 | 120-3126 | 1 | Camshaft ASM |
| 50 | 110-3729 | 1 | Ball |
| 60 | 130-1534 | 1 | Gear-Cam |
| 70 | 98-9378 | 1 | Key-Feather |
| 80 | 100-1887 | 1 | Stopper-Camshaft |
| 90 | 98-9350 | 2 | Bolt |
| 100 | 121-2421 | 1 | Idle Gear ASM |
| 110 | 121-2422 | 1 | Bushing |
| 120 | 100-1970 | 1 | Collar-Gear, Idle |
| 130 | 100-1969 | 1 | Ring-Snap |
| 140 | 100-1967 | 1 | Shaft-Gear, Idle |
| 150 | 100-1774 | 3 | Bolt-Flange |
| 160 | 100-2240 | 1 | Idle Gear ASM |

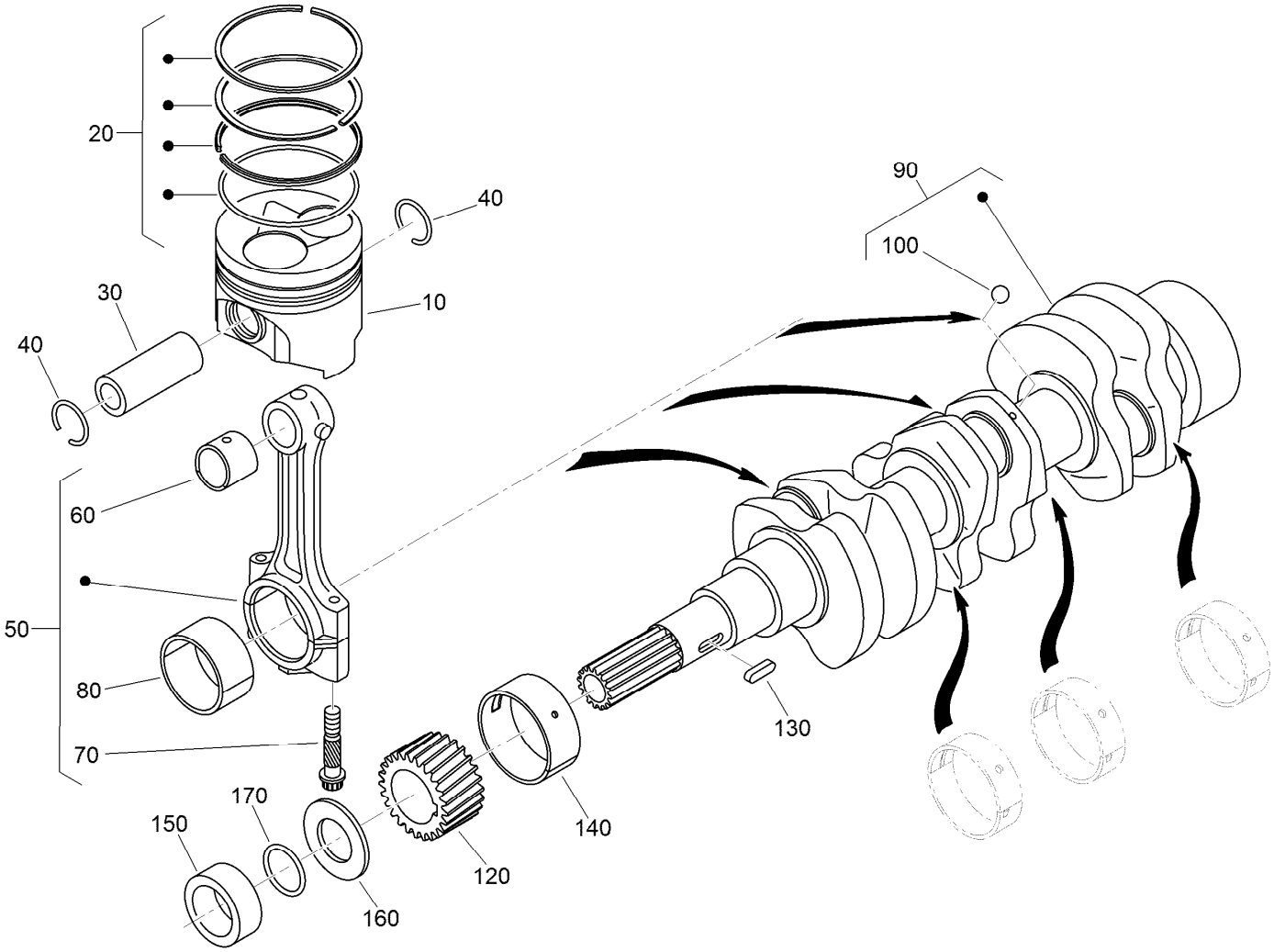


# Piston and Crankshaft Assembly

| Ref. | Part Number | Qty. | Description |
|---|---|---|---|
| 10 | 130-1518 | 3 | Piston |
| 10 | 130-1520 | 3 | Piston |
| 20 | 130-1516 | 3 | Piston Ring ASM |
| 20 | 130-1517 | 3 | Piston Ring ASM |
| 30 | 110-3734 | 3 | Pin-Piston |
| 40 | 100-1835 | 6 | Circlip-Internal |
| 50 | 125-9070 | 3 | Connecting Rod ASM |
| 60 | 110-3736 | 3 | Bushing-Pin, Piston |
| 70 | 100-1999 | 6 | Bolt-Rod, Connecting |
| 80 | 100-2000 | 3 | Metal-Crankpin (STD) |
| 80 | 121-3849 | 3 | Metal-Crankpin (-.20MM) |

| Ref. | Part Number | Qty. | Description |
|---|---|---|---|
| 80 | 121-2420 | 3 | Metal-Crankpin (-.40MM) |
| 90 | 117-0308 | 1 | Crankshaft |
| 100 | 100-1791 | 3 | Ball |
| 120 | 100-1891 | 1 | Gear-Crankshaft |
| 130 | 100-1752 | 1 | Key-Feather |
| 140 | 110-3738 | 1 | Metal-Crankshaft (STD) |
| 140 | 121-2424 | 1 | Metal-Crankshaft (-.20MM) |
| 140 | 121-2425 | 1 | Metal-Crankshaft (-.40MM) |
| 150 | 100-1890 | 1 | Collar-Crankshaft |
| 160 | 100-1974 | 1 | Slinger-Oil |
| 170 | 100-2209 | 1 | O-Ring |

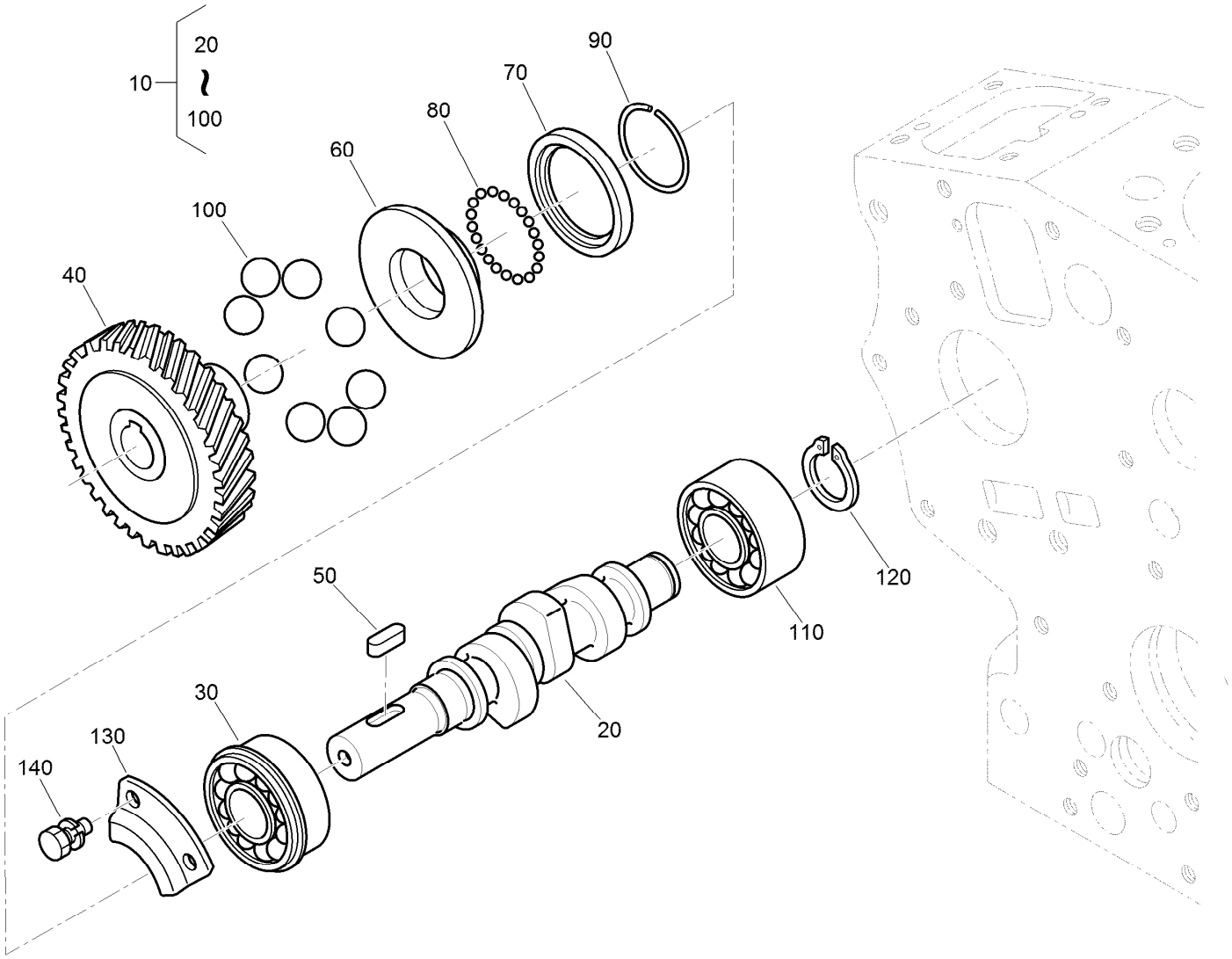


# Fuel Camshaft Assembly

| Ref. | Part Number | Qty. | Description |
|---|---|---|---|
| 10 | 112-8335 | 1 | Fuel Camshaft ASM |
| 20 | 110-3756 | 1 | Camshaft-Fuel |
| 30 | 100-1795 | 1 | Bearing-Ball |
| 40 | 100-2006 | 1 | Gear-Pump, Injection |
| 50 | 100-1752 | 1 | Key-Feather |
| 60 | 112-8336 | 1 | Sleeve-Governor |
| 70 | 100-1904 | 1 | Case-Ball, Governor |
| 80 | 100-1790 | 32 | Ball |
| 90 | 100-1843 | 1 | Circ-Clip |
| 100 | 100-1793 | 8 | Ball |
| 110 | 110-3757 | 1 | Bearing-Ball |
| 120 | 100-1784 | 1 | Circ-Clip, External |
| 130 | 100-1888 | 1 | Stopper-Fuel, Camshaft |
| 140 | 98-9350 | 2 | Bolt |

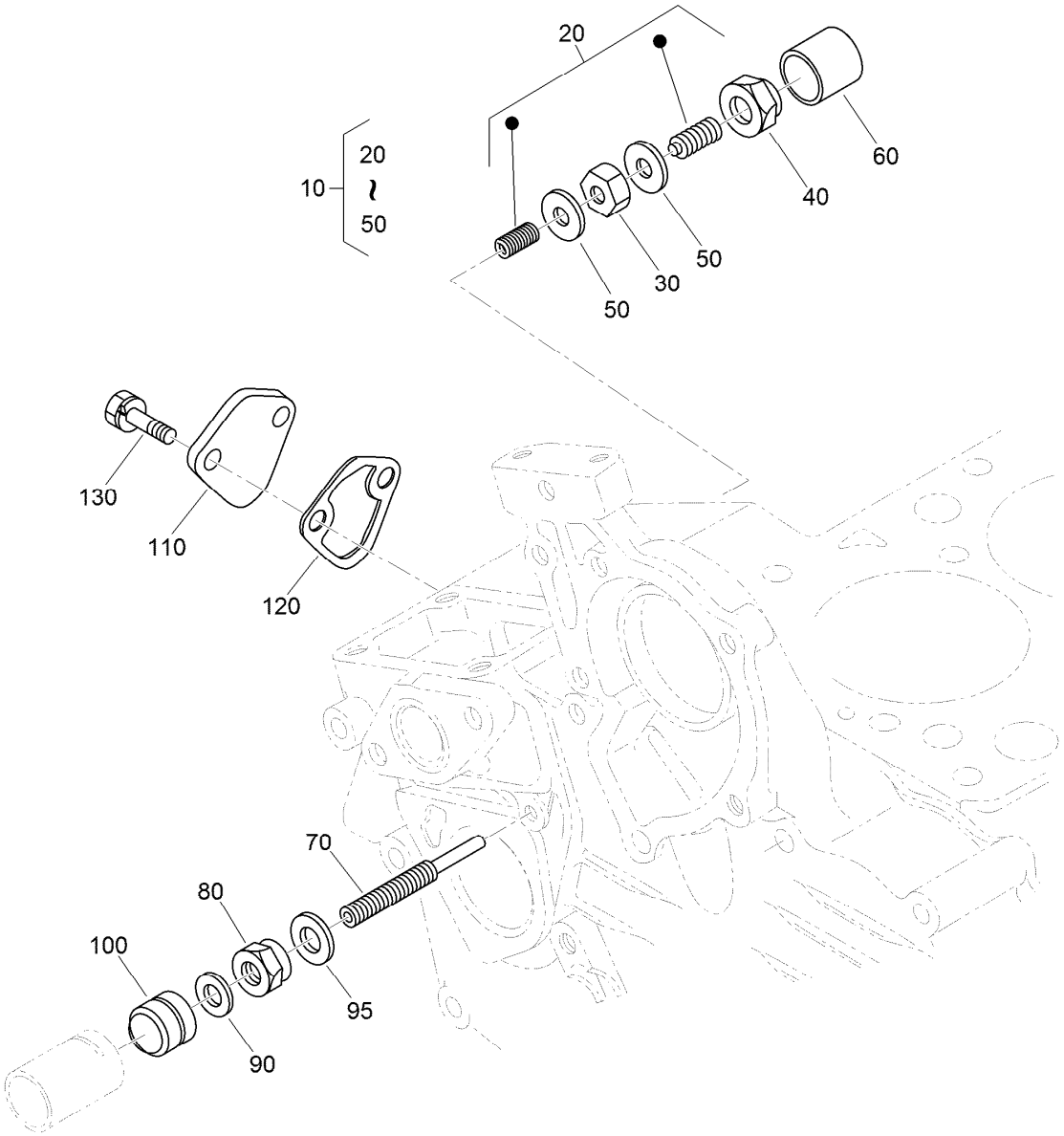


# Idle Apparatus and Fuel Pump Cover Assembly

| *Ref.* | *Part Number* | *Qty.* | *Description* |
|---|---|---|---|
| 10 | 100-1898 | 1 | Idle Apparatus ASM |
| 20 | 100-1899 | 1 | Adjusting Bolt ASM |
| 30 | 100-1846 | 1 | Nut |
| 40 | 100-1901 | 1 | Nut-Cap |
| 50 | 98-7428 | 2 | Gasket |
| 60 | 100-1902 | 1 | Cap |
| 70 | 110-3758 | 1 | Bolt-Adjusting |
| 80 | 100-2175 | 1 | Nut-Lock |
| 90 | 98-7654 | 1 | Gasket |
| 95 | 107-9081 | 1 | Gasket |
| 100 | 99-8387 | 1 | Nut-Cap |
| 110 | 99-3514 | 1 | Cover |
| 120 | 98-9636 | 1 | Gasket-Pump, Fuel |
| 130 | 98-7692 | 2 | Bolt |

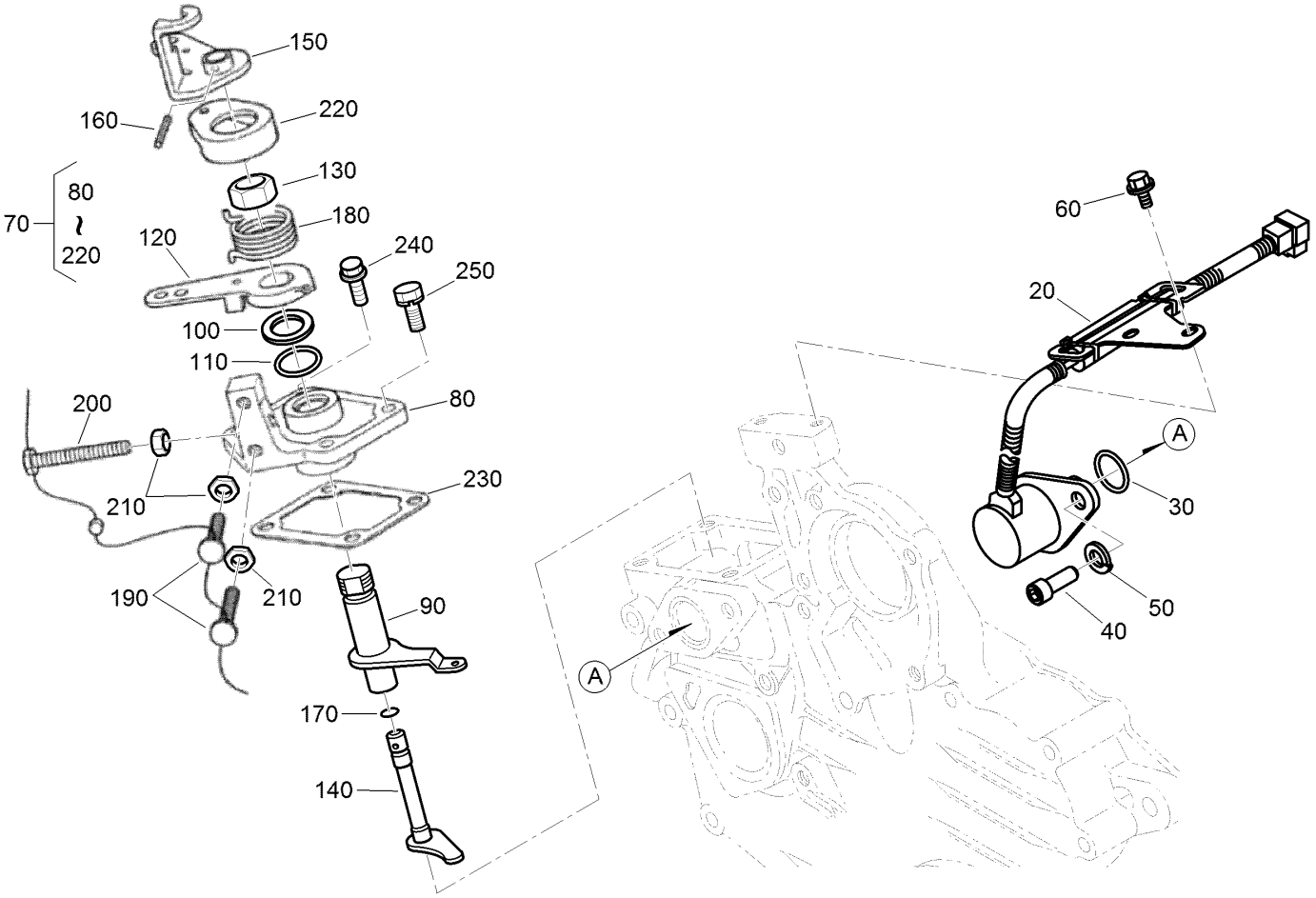


# Stop Solenoid and Speed Control Plate Assembly

| Ref. | Part Number | Qty. | Description |
|---|---|---|---|
| 20 | 117-2719 | 1 | Solenoid Stop ASM |
| 30 | 110-3762 | 1 | O-Ring |
| 40 | 110-3763 | 2 | Bolt-HSH |
| 50 | 98-7699 | 2 | Washer-Spring |
| 60 | 100-1774 | 2 | Bolt-Flange |
| 70 | 110-3769 | 1 | Speed Control Plate ASM |
| 80 | 110-3770 | 1 | Plate-Control, Speed |
| 90 | 110-3771 | 1 | Lever-Governor |
| 100 | 110-3772 | 1 | Collar |
| 110 | 100-2208 | 1 | O-Ring |
| 120 | 110-3773 | 1 | Lever-Control, Speed |
| 130 | 110-3774 | 1 | Nut-Control, Speed |

| Ref. | Part Number | Qty. | Description |
|---|---|---|---|
| 140 | 110-3775 | 1 | Shaft-Lever |
| 150 | 110-3776 | 1 | Lever-Stop, Engine |
| 160 | 110-3777 | 1 | Pin-Spring |
| 170 | 100-2207 | 1 | O-Ring |
| 180 | 110-3778 | 1 | Spring-Return |
| 190 | 120-3133 | 2 | Screw-Stopper |
| 200 | 120-3134 | 1 | Bolt |
| 210 | 98-7572 | 3 | Nut |
| 220 | 110-3779 | 1 | Cap |
| 230 | 100-1962 | 1 | Gasket-Plate, Control |
| 240 | 127-0403 | 2 | Bolt-Flange |
| 250 | 112-2507 | 2 | Bolt |

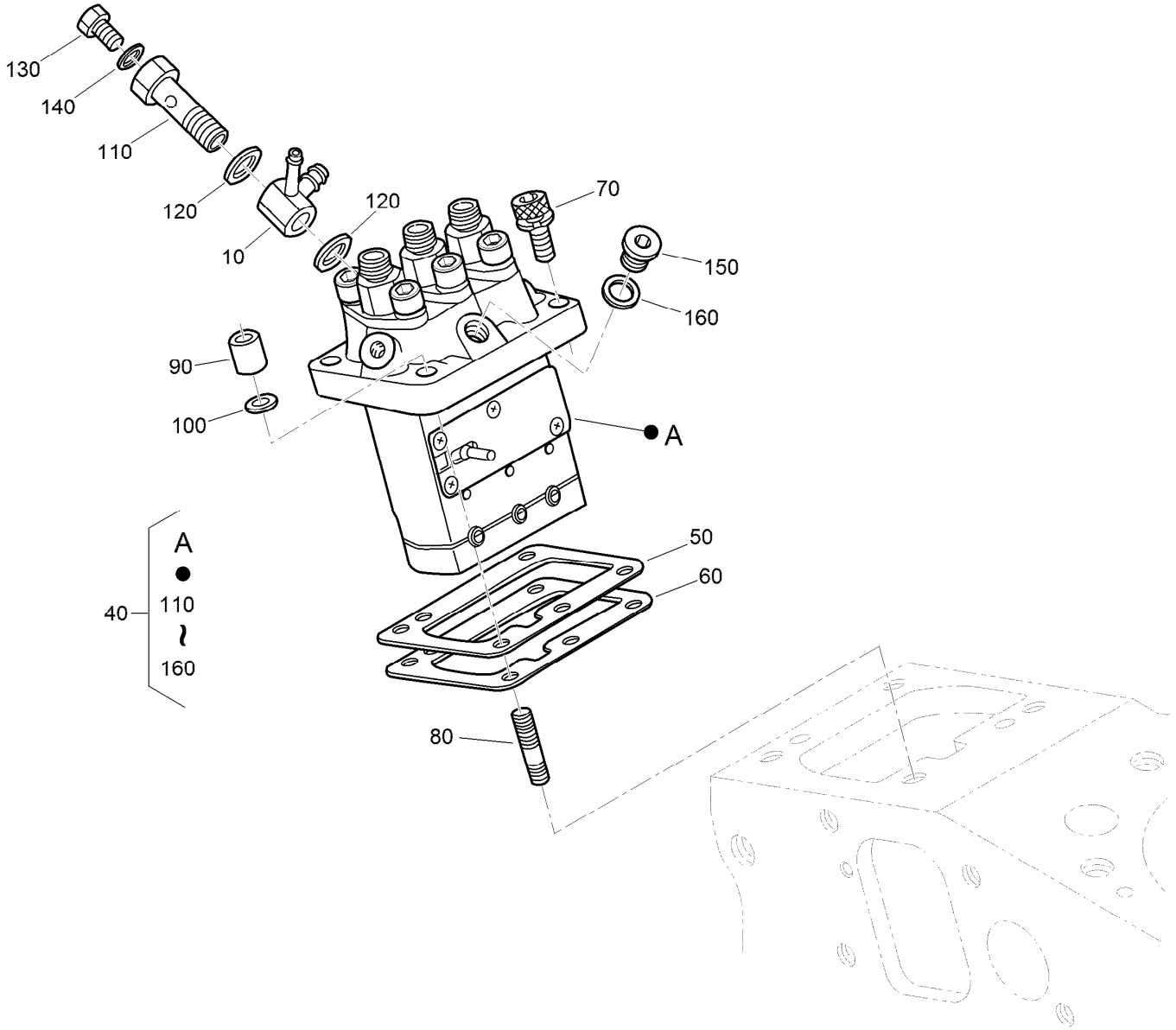


# Injection Pump Assembly

| Ref. | Part Number | Qty. | Description |
|---|---|---|---|
| 10 | 110-3764 | 1 | Joint |
| 40 | 110-3765 | 1 | Injection Pump ASM |
| 50 | 115-3045 | 1 | Shim-Injection (0.175MM) |
| 50 | 98-9456 | 1 | Shim-Injection (0.20MM) |
| 50 | 98-9457 | 1 | Shim-Injection (0.25MM) |
| 60 | 98-9458 | 1 | Shim-Injection (0.30MM) |
| 60 | 115-3046 | 1 | Shim-Injection (0.35MM) |
| 70 | 117-7564 | 2 | Bolt-Hex Soc HD |
| 80 | 98-9438 | 2 | Stud |

| Ref. | Part Number | Qty. | Description |
|---|---|---|---|
| 90 | 98-9440 | 2 | Nut-Cap |
| 100 | 98-7699 | 2 | Washer-Spring |
| 110 | 100-1896 | 1 | Screw-Hollow |
| 120 | 98-9445 | 2 | Gasket |
| 130 | 98-9430 | 1 | Screw |
| 140 | 98-9446 | 1 | Gasket |
| 150 | 98-9466 | 1 | Plug |
| 160 | 98-9451 | 1 | Gasket |

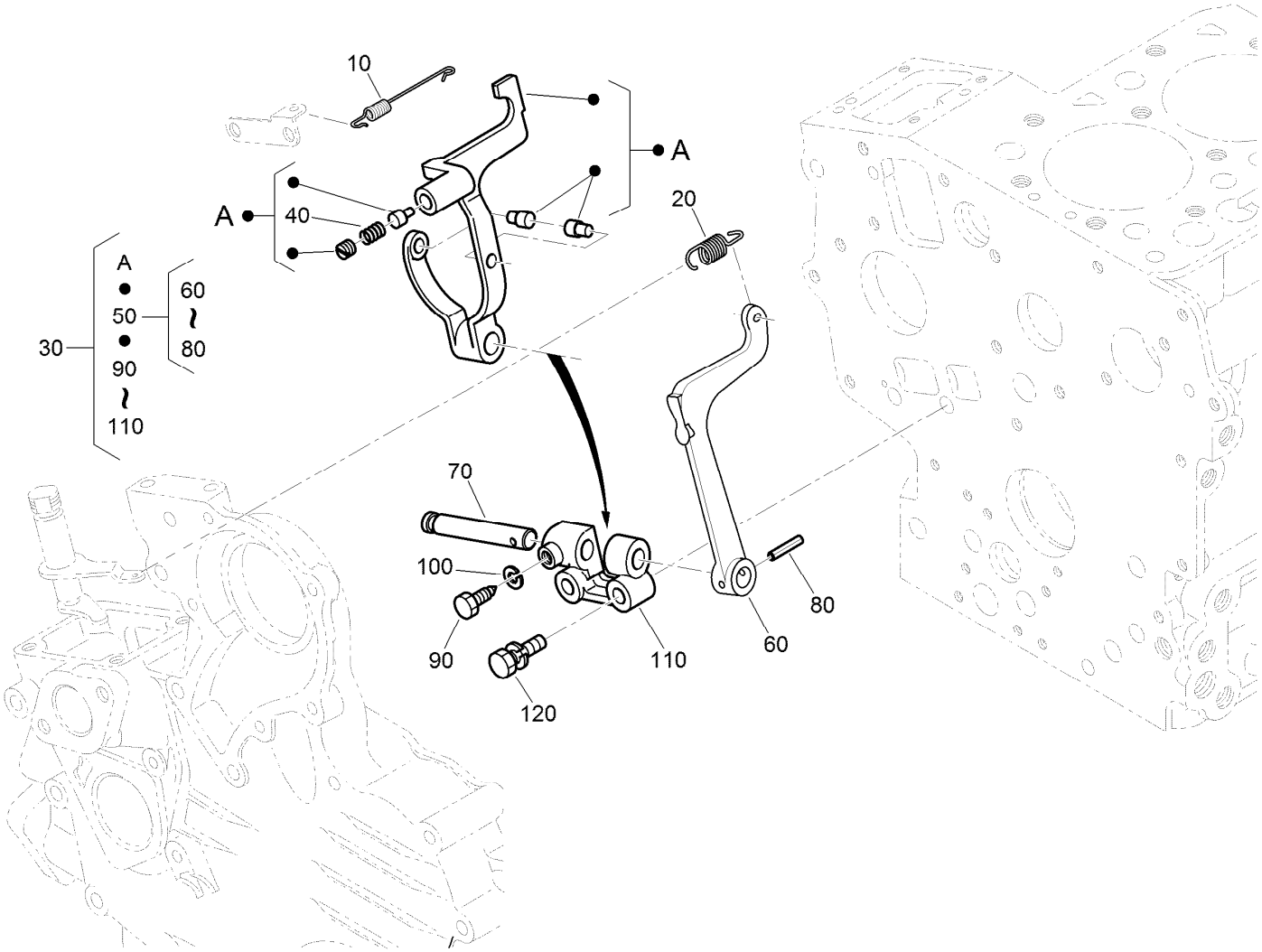


# Governor Assembly

| Ref. | Part Number | Qty. | Description |
|---|---|---|---|
| 10 | 110-3766 | 1 | Spring-Start |
| 20 | 130-1220 | 1 | Spring-Governor |
| 30 | 121-3822 | 1 | Fork Lever ASM |
| 40 | 121-2410 | 1 | Spring |
| 50 | 100-1905 | 1 | Fork Lever ASM |
| 60 | 100-1907 | 1 | Lever-Fork |
| 70 | 100-1908 | 1 | Shaft-Lever, Fork |
| 80 | 100-1751 | 1 | Pin-Spring |
| 90 | 100-1845 | 1 | Bolt |
| 100 | 127-0408 | 1 | Washer-Lock, Spring |
| 110 | 100-1909 | 1 | Holder-Lever, Fork |
| 120 | 100-1763 | 2 | Bolt |

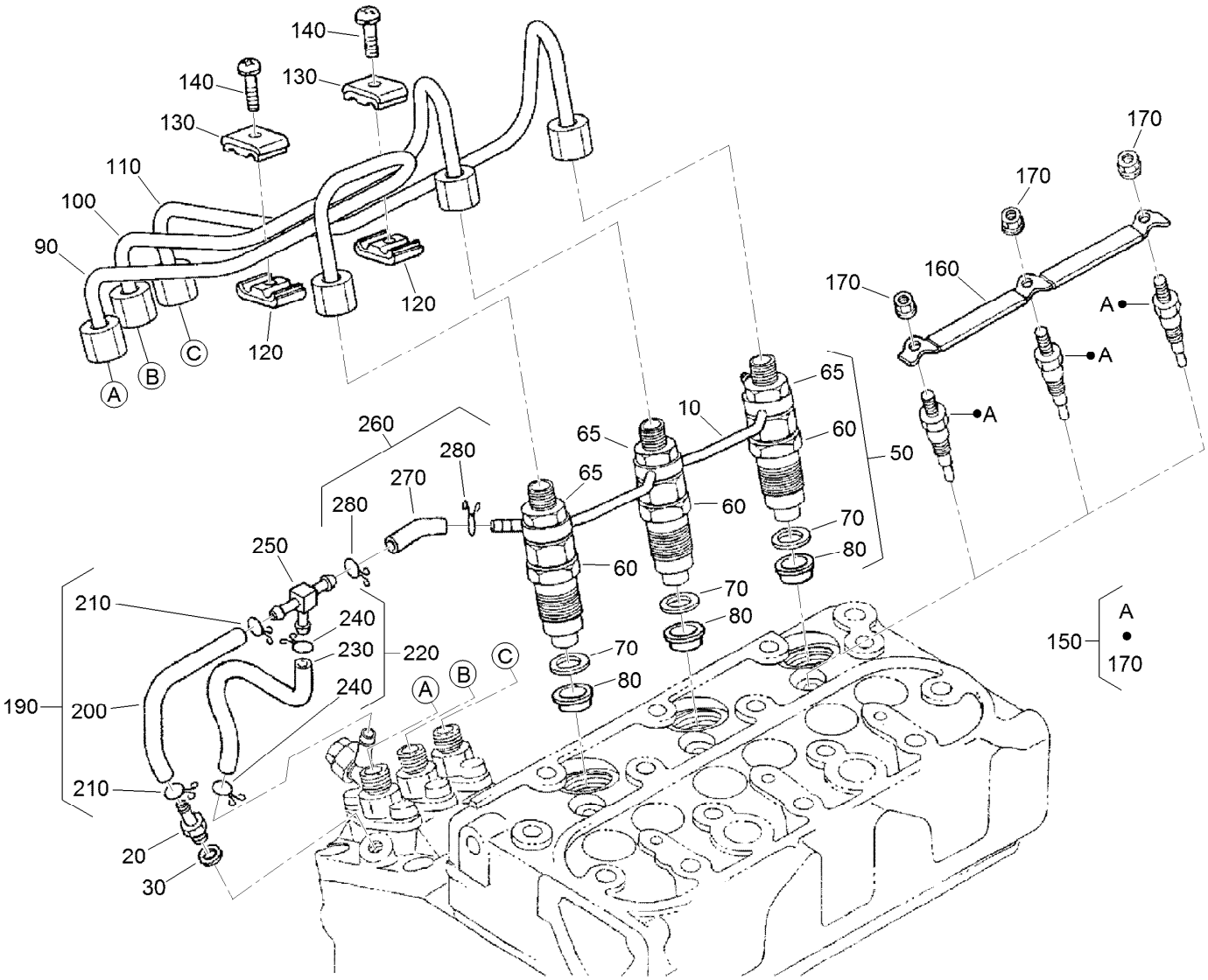


# Nozzle Holder and Glow Plug Assembly

| Ref. | Part Number | Qty. | Description |
|---|---|---|---|
| 10 | 110-3780 | 1 | Over Flow Pipe ASM |
| 20 | 98-9431 | 1 | Screw-Bleeder, Air |
| 30 | 98-7654 | 1 | Gasket |
| 50 | 130-1305 | 3 | Nozzle Holder Kit |
| 60 | 130-1303 | 3 | Nozzle Holder ASM |
| 65 | 121-2411 | 3 | Nut |
| 70 | 98-7676 | 3 | Gasket |
| 80 | 98-7677 | 3 | Seal-Heat |
| 90 | 130-1522 | 1 | Pipe-Injection |
| 100 | 130-1523 | 1 | Pipe-Injection |
| 110 | 130-1541 | 1 | Pipe-Injection |
| 120 | 98-7682 | 2 | Clamp-Pipe |
| 130 | 98-7683 | 2 | Clamp-Pipe |
| 140 | 98-7684 | 2 | Screw (W/Washer) |

| Ref. | Part Number | Qty. | Description |
|---|---|---|---|
| 150 | 130-1411 | 3 | Plug-Glow |
| 160 | 110-3784 | 1 | Cord-Plug, Glow |
| 170 | 99-8377 | 3 | Nut-Flange |
| 190 | 110-3785 | 1 | Fuel Tube ASM |
| 200 | 110-3786 | 1 | Tube-Fuel |
| 210 | 98-7671 | 2 | Clip-Pipe |
| 220 | 110-3787 | 1 | Fuel Tube ASM |
| 230 | 110-3788 | 1 | Tube-Fuel |
| 240 | 98-7671 | 2 | Clip-Pipe |
| 250 | 112-8338 | 1 | Pipe-Joint, T |
| 260 | 110-3790 | 1 | Fuel Tube ASM |
| 270 | 110-3791 | 1 | Tube-Fuel |
| 280 | 98-7671 | 2 | Clip-Pipe |

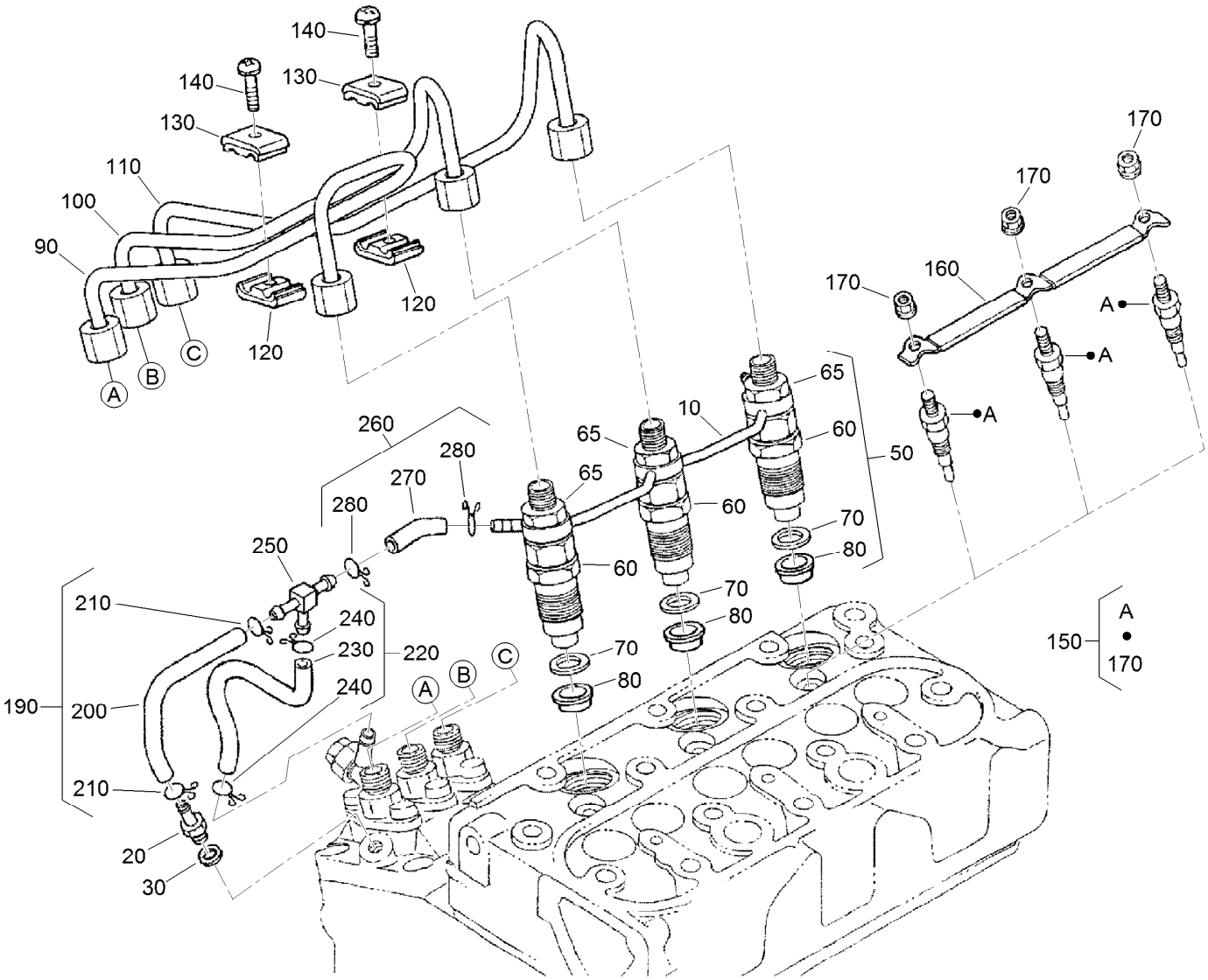


# Nozzle Holder and Glow Plug Assembly (continued)

# Nozzle Holder Assembly

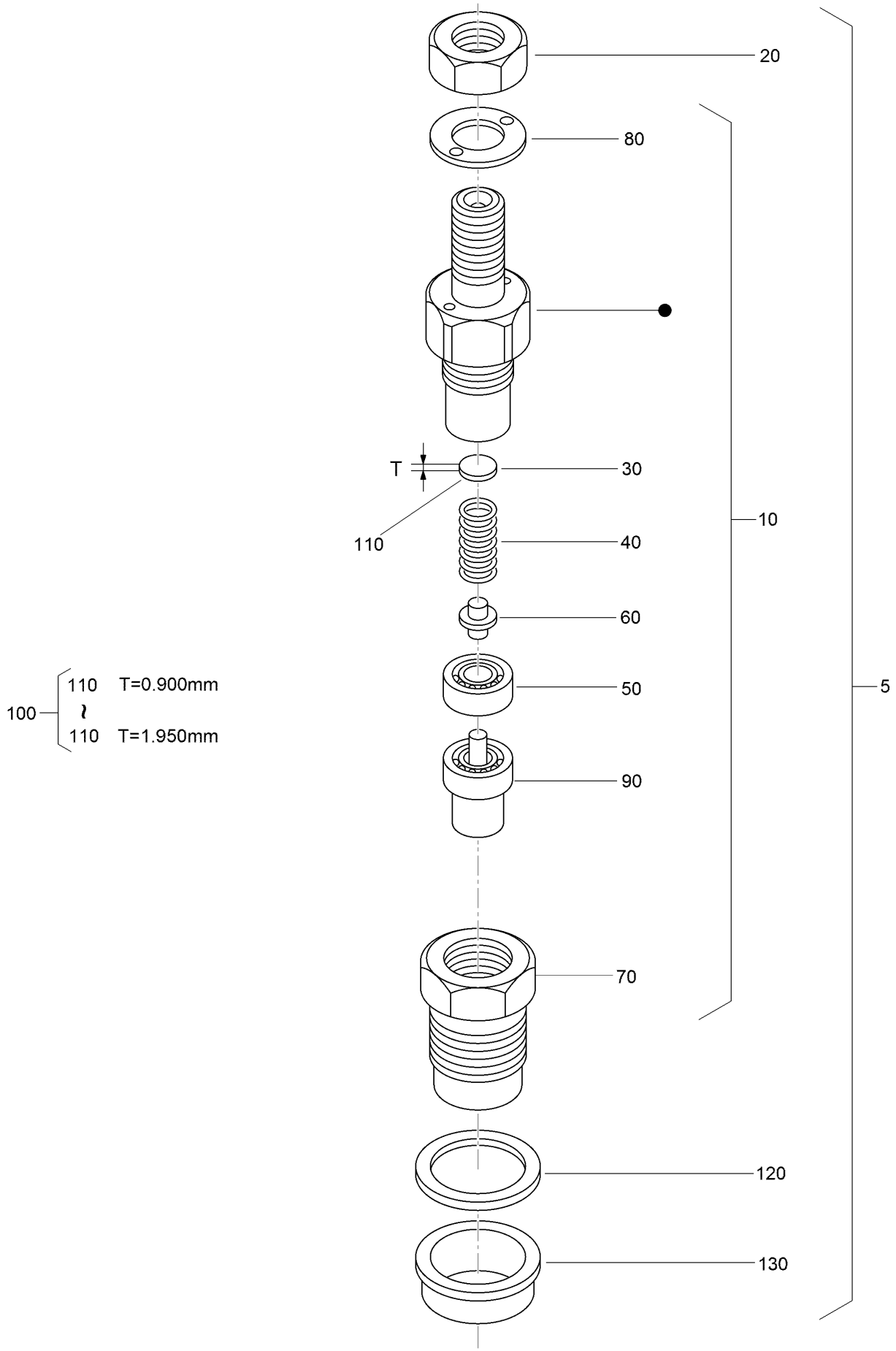

# Nozzle Holder Assembly (continued)

| Ref. | Part Number | Qty. | Description |
|---|---|---|---|
| 5 | 130-1305 | 3 | Nozzle Holder Kit |
| 10 | 130-1303 | 3 | Nozzle Holder ASM |
| 20 | 121-2411 | 3 | Nut |
| 30 | 99-8302 | 3 | Washer-Adjusting |
| 40 | 99-8303 | 3 | Spring-Nozzle |
| 50 | 99-8304 | 3 | Spacer-Distance |
| 60 | 99-8305 | 3 | Rod-Push |
| 70 | 130-1304 | 3 | Nut-Nozzle |
| 80 | 99-8307 | 3 | Washer-Plain |
| 90 | 130-1497 | 3 | Nozzle-Piece |
| 100 | 98-9448 | 3 | Adjusting Washer ASM |
| 110 | 98-7642 | 3 | Washer-Adjusting (0.900Mm) |
| 110 | 98-7841 | 3 | Washer-Adjusting (0.925Mm) |
| 110 | 98-7842 | 3 | Washer-Adjusting (0.950Mm) |
| 110 | 98-7843 | 3 | Washer-Adjusting (0.975Mm) |
| 110 | 98-7844 | 3 | Washer-Adjusting (1.000Mm) |
| 110 | 98-7845 | 3 | Washer-Adjusting (1.025Mm) |
| 110 | 98-7846 | 3 | Washer-Adjusting (1.050Mm) |
| 110 | 98-7847 | 3 | Washer-Adjusting (1.075MM) |
| 110 | 98-7848 | 3 | Washer-Adjusting (1.100MM) |
| 110 | 98-7849 | 3 | Washer-Adjusting (1.125MM) |
| 110 | 98-7850 | 3 | Washer-Adjusting (1.150MM) |
| 110 | 98-7851 | 3 | Washer-Adjusting (1.175MM) |
| 110 | 98-7852 | 3 | Washer-Adjusting (1.200MM) |
| 110 | 98-7853 | 3 | Washer-Adjusting (1.225MM) |
| 110 | 98-7854 | 3 | Washer-Adjusting (1.250MM) |
| 110 | 98-7855 | 3 | Washer-Adjusting (1.275MM) |
| 110 | 98-7856 | 3 | Washer-Adjusting 1.300MM) |
| 110 | 98-7857 | 3 | Washer-Adjusting (1.325MM) |
| 110 | 98-7858 | 3 | Washer-Adjusting (1.350MM) |
| 110 | 98-7859 | 3 | Washer-Adjusting (1.375MM) |
| 110 | 98-7860 | 3 | Washer-Adjusting (1.400MM) |
| 110 | 98-7861 | 3 | Washer-Adjusting (1.425MM) |
| 110 | 98-7862 | 3 | Washer-Adjusting (1.450MM) |
| 110 | 98-7863 | 3 | Washer-Adjusting (1.475MM) |
| 110 | 98-7864 | 3 | Washer-Adjusting (1.500MM) |
| 110 | 98-7865 | 3 | Washer-Adjusting (1.525MM) |
| 110 | 98-7866 | 3 | Washer-Adjusting (1.550MM) |
| 110 | 98-7867 | 3 | Washer-Adjusting (1.575MM) |
| 110 | 98-7868 | 3 | Washer-Adjusting (1.600MM) |
| 110 | 98-7869 | 3 | Washer-Adjusting (1.625MM) |
| 110 | 98-7870 | 3 | Washer-Adjusting (1.650MM) |
| 110 | 98-7871 | 3 | Washer-Adjusting (1.675MM) |
| 110 | 98-7872 | 3 | Washer-Adjusting (1.700MM) |
| 110 | 98-7873 | 3 | Washer-Adjusting (1.725MM) |
| 110 | 98-7874 | 3 | Washer-Adjusting (1.750MM) |
| 110 | 98-7875 | 3 | Washer-Adjusting (1.775MM) |
| 110 | 98-7876 | 33 | Washer-Adjusting (1.800MM) |
| 110 | 98-7877 | 3 | Washer-Adjusting (1.825MM) |
| 110 | 98-7878 | 3 | Washer-Adjusting (1.850MM) |
| 110 | 98-7879 | 3 | Washer-Adjusting (1.875MM) |
| 110 | 98-7880 | 3 | Washer-Adjusting (1.900MM) |
| 110 | 98-7881 | 3 | Washer-Adjusting (1.925MM) |
| 110 | 98-7882 | 3 | Washer-Adjusting (1.950MM) |
| 120 | 98-7676 | 3 | Gasket |
| 130 | 98-7677 | 3 | Seal-Heat |

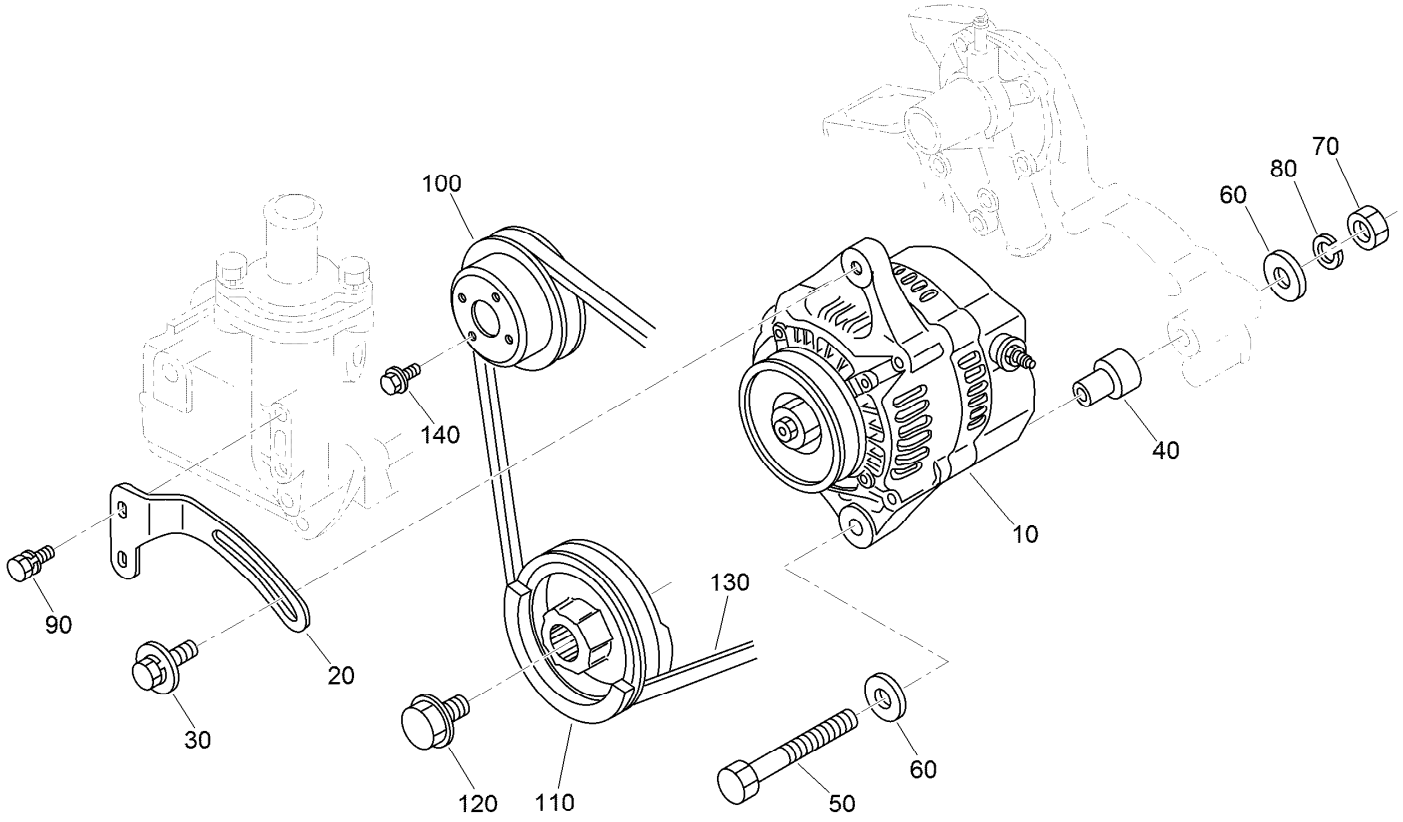


# Alternator and Pulley Assembly

| Ref. | Part Number | Qty. | Description |
|---|---|---|---|
| 10 | 131-6557 | 1 | Alternator ASM |
| 20 | 121-2412 | 1 | Stay-Alternator |
| 30 | 121-2413 | 1 | Bolt |
| 40 | 110-3794 | 1 | Collar |
| 50 | 121-2418 | 1 | Bolt-Hex |
| 60 | 120-5832 | 2 | Washer-Plain |
| 70 | 98-7534 | 1 | Nut |
| 80 | 105-2893 | 1 | Washer-Spring |
| 90 | 98-7692 | 2 | Bolt |
| 100 | 100-1921 | 1 | Pulley-Fan |
| 110 | 112-2510 | 1 | Pulley-Drive, Fan |
| 120 | 100-1978 | 1 | Bolt |
| 130 | 119-4486 | 1 | Belt-V, Fan |
| 140 | 99-8363 | 4 | Bolt-Flange |

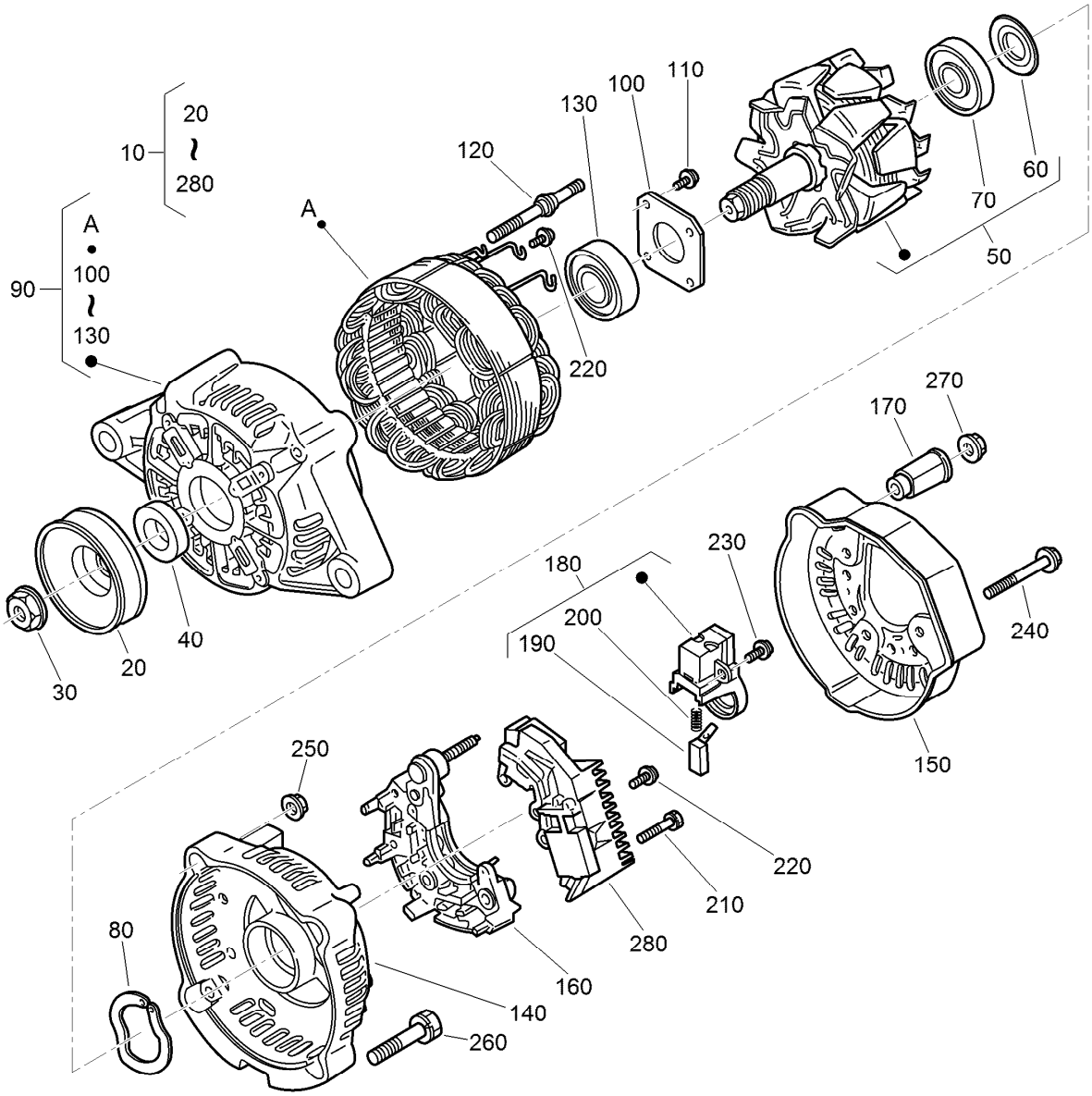


# Alternator Components Assembly

| Ref. | Part Number | Qty. | Description |
|---|---|---|---|
| 10 | 131-6557 | 1 | Alternator ASM |
| 20 | 98-9453 | 1 | Pulley-Dynamo |
| 30 | 98-7708 | 1 | Nut |
| 40 | 98-7709 | 1 | Collar |
| 50 | 107-0136 | 1 | Rotor ASM |
| 60 | 98-7711 | 1 | Cover-Bearing |
| 70 | 107-0138 | 1 | Bearing-Ball |
| 80 | 98-7713 | 1 | Washer-Thrust |
| 90 | 107-0139 | 1 | Drive End Frame ASM |
| 100 | 98-7715 | 1 | Plate-Retainer |
| 110 | 98-7716 | 4 | Screw-Head, Round |
| 120 | 98-7717 | 2 | Bolt-Through |
| 130 | 133-2811 | 1 | Bearing |
| 140 | 107-9087 | 1 | Frame-End |

| Ref. | Part Number | Qty. | Description |
|---|---|---|---|
| 150 | 107-0140 | 1 | Cover-End |
| 160 | 127-1612 | 1 | Rectifier ASM |
| 170 | 98-7722 | 1 | Bushing-Insulation |
| 180 | 107-0141 | 1 | Brush Holder ASM |
| 190 | 98-7724 | 2 | Brush |
| 200 | 98-7725 | 2 | Spring-Brush |
| 210 | 98-7726 | 2 | Screw-Head, Round |
| 220 | 98-7727 | 6 | Screw-Head, Round |
| 230 | 98-7728 | 1 | Screw-Head, Round |
| 240 | 98-7729 | 3 | Bolt |
| 250 | 98-7730 | 2 | Nut |
| 260 | 98-7731 | 2 | Bolt |
| 270 | 98-7732 | 1 | Nut |
| 280 | 110-3799 | 1 | Regulator ASM |

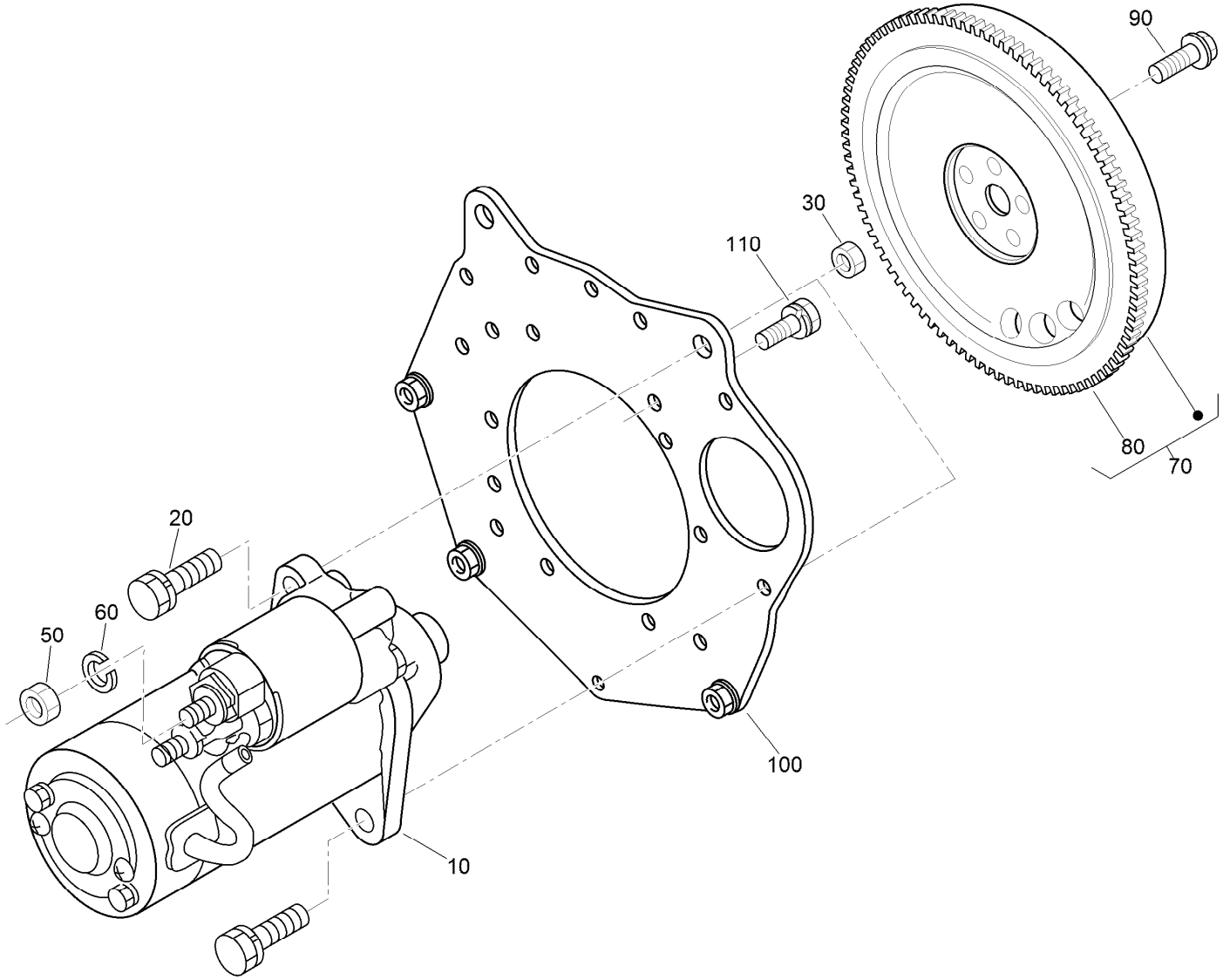


# Starter and Flywheel Assembly

| Ref. | Part Number | Qty. | Description |
|---|---|---|---|
| 10 | 110-3800 | 1 | Starter ASM |
| 20 | 98-7697 | 2 | Bolt |
| 30 | 98-7534 | 2 | Nut |
| 50 | 98-7534 | 1 | Nut |
| 60 | 105-2893 | 1 | Washer-Spring |
| 70 | 130-1369 | 1 | Flywheel ASM |
| 80 | 127-1604 | 1 | Gear-Ring |
| 90 | 100-1930 | 5 | Bolt-Flywheel |
| 100 | 120-3130 | 1 | Plate-End, Rear |
| 110 | 110-3754 | 10 | Bolt |

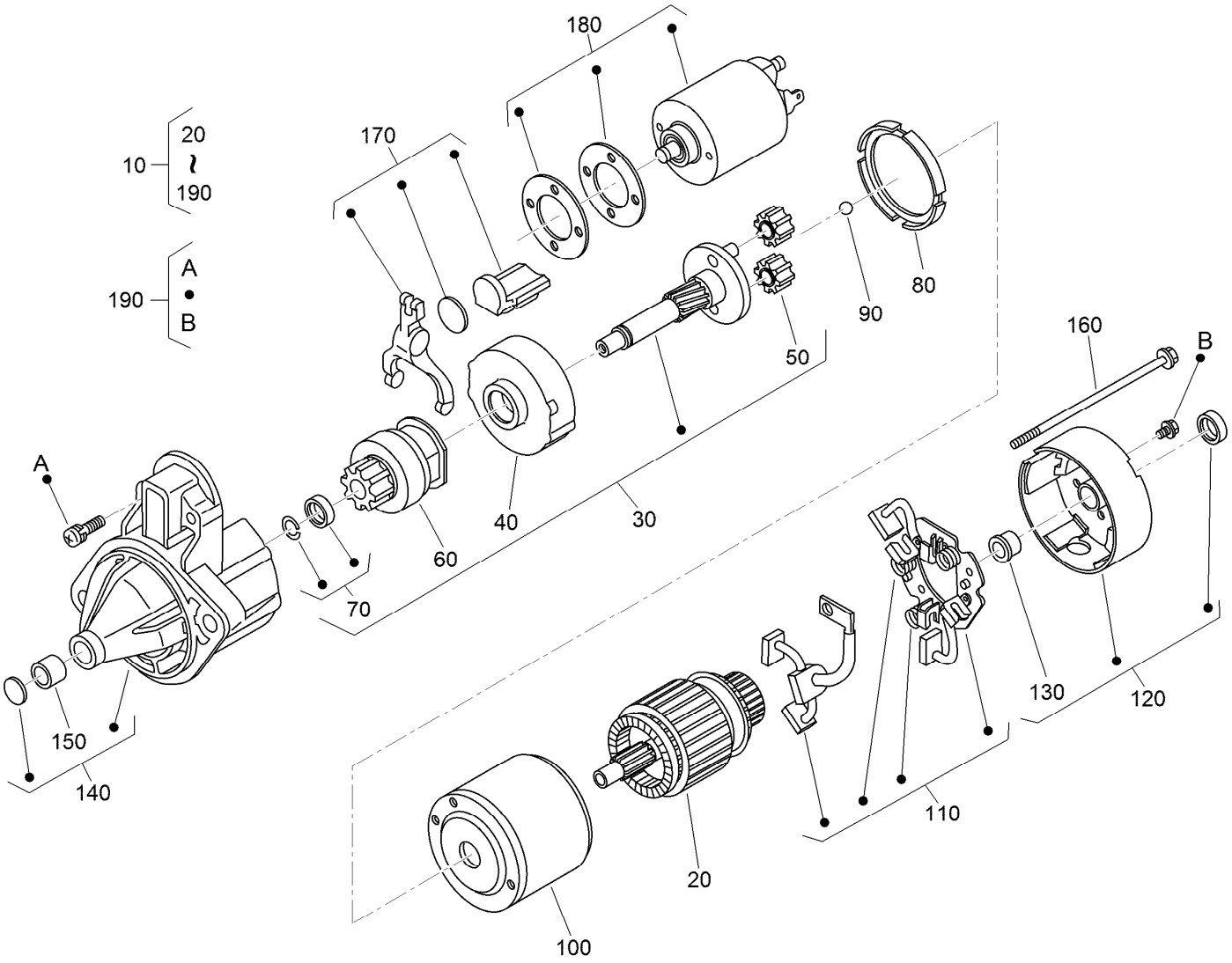


# Starter Component Assembly

| Ref. | Part Number | Qty. | Description |
|---|---|---|---|
| 10 | 110-3800 | 1 | Starter ASM |
| 20 | 110-3801 | 1 | Armature |
| 30 | 110-3802 | 1 | Shaft ASM |
| 40 | 120-3142 | 1 | Gear-Internal |
| 50 | 110-3804 | 3 | Gear-Planetary |
| 60 | 110-3805 | 1 | Clutch-Running, Over |
| 70 | 110-3806 | 1 | Stopper |
| 80 | 120-3143 | 1 | Gasket |
| 90 | 110-3808 | 1 | Ball |
| 100 | 130-1295 | 1 | Yoke |

| Ref. | Part Number | Qty. | Description |
|---|---|---|---|
| 110 | 110-3810 | 1 | Brush Holder ASM |
| 120 | 110-3811 | 1 | Rear Bracket ASM |
| 130 | 110-3812 | 1 | Bushing |
| 140 | 110-3813 | 1 | Front Bracket ASM |
| 150 | 110-3814 | 1 | Bushing |
| 160 | 110-3815 | 2 | Bolt |
| 170 | 110-3816 | 1 | Fork Lever ASM |
| 180 | 110-3817 | 1 | Magnetic Switch ASM |
| 190 | 110-3818 | 2 | Screws (Set Of 4) |

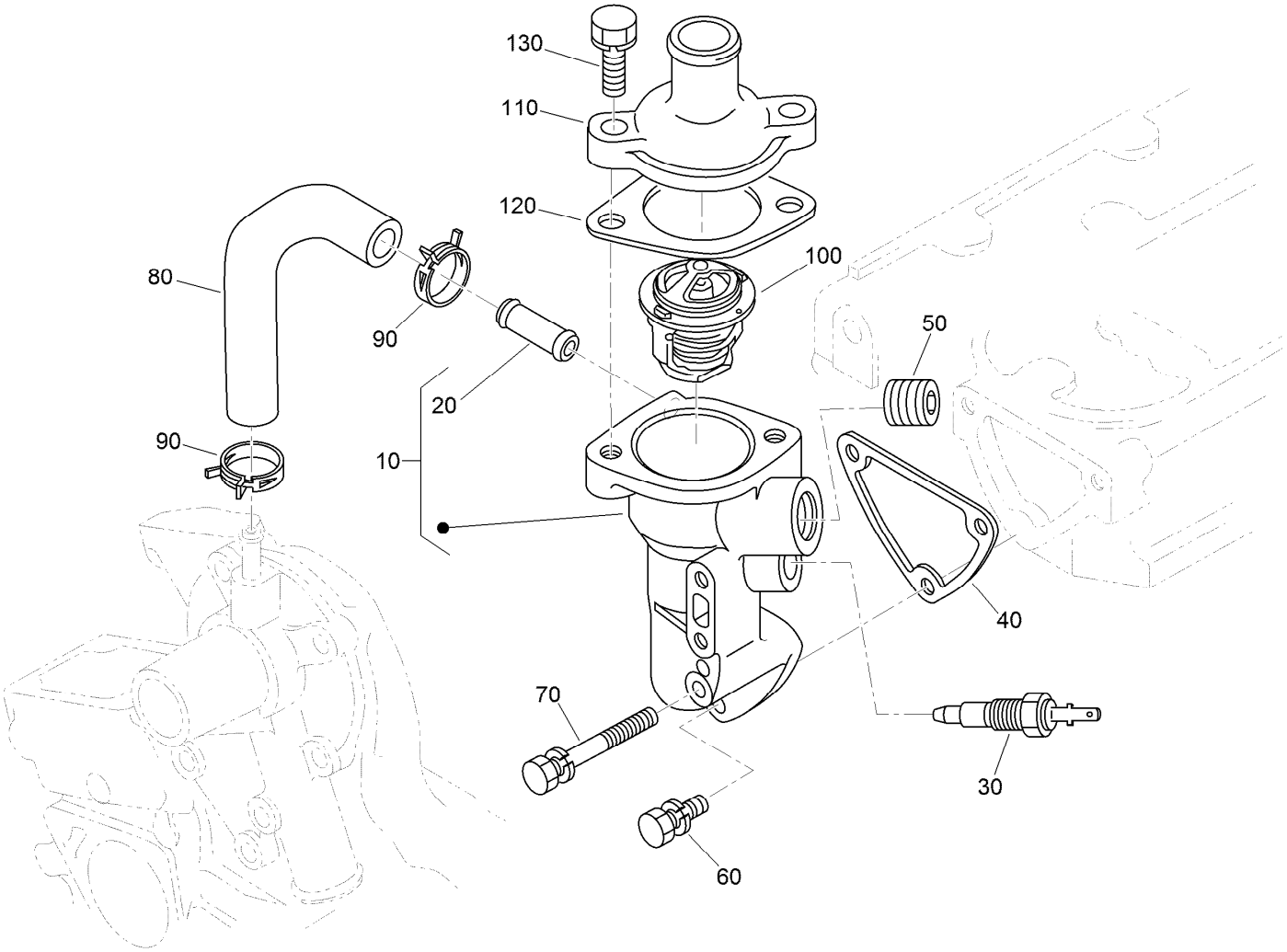


# Water Flange and Thermostat Assembly

| Ref. | Part Number | Qty. | Description |
|---|---|---|---|
| 10 | 121-2414 | 1 | Water Flange ASM |
| 20 | 98-9580 | 1 | Pipe-Return, Water |
| 30 | 100-1983 | 1 | Thermo-Switch |
| 40 | 110-3820 | 1 | Gasket-Flange, Water |
| 50 | 105-2874 | 1 | Plug |
| 60 | 98-7692 | 2 | Bolt |
| 70 | 125-9063 | 1 | Bolt-Sems |
| 80 | 100-2017 | 1 | Pipe-Return, Water |
| 90 | 125-9078 | 2 | Clamp-Hose |
| 100 | 98-7778 | 1 | Thermostat ASM |
| 110 | 121-2415 | 1 | Cover-Thermostat |
| 120 | 105-3748 | 1 | Gasket-Thermostat |
| 130 | 98-7438 | 2 | Bolt |

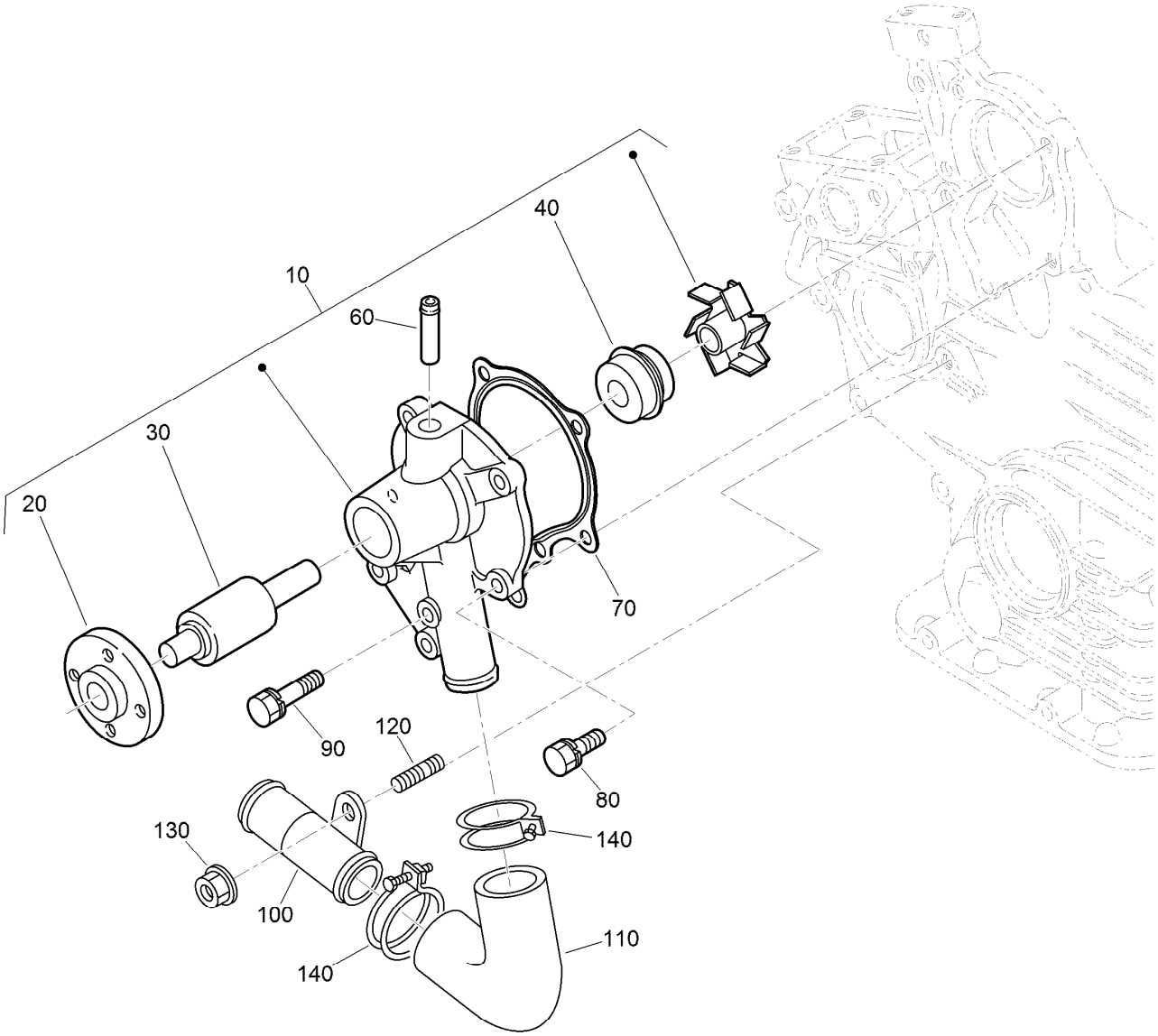


# Water Pump and Water Pipe Assembly

| Ref. | Part Number | Qty. | Description |
|---|---|---|---|
| 10 | 127-1607 | 1 | Water Pump ASM |
| 20 | 125-9081 | 1 | Flange-Pump, Water |
| 30 | 100-1934 | 1 | Bearing-Ball |
| 40 | 99-3518 | 1 | Water Pump Seal ASM |
| 60 | 100-1932 | 1 | Pipe-Return, Water |
| 70 | 117-8846 | 1 | Gasket-Pump, Water |
| 80 | 100-1750 | 4 | Bolt |
| 90 | 100-1764 | 1 | Bolt |
| 100 | 112-2835 | 1 | Pipe-Water |
| 110 | 112-2836 | 1 | Hose-Water |
| 120 | 100-1924 | 1 | Stud |
| 130 | 100-2203 | 1 | Nut-Flange |
| 140 | 110-3828 | 2 | Band-Pipe |

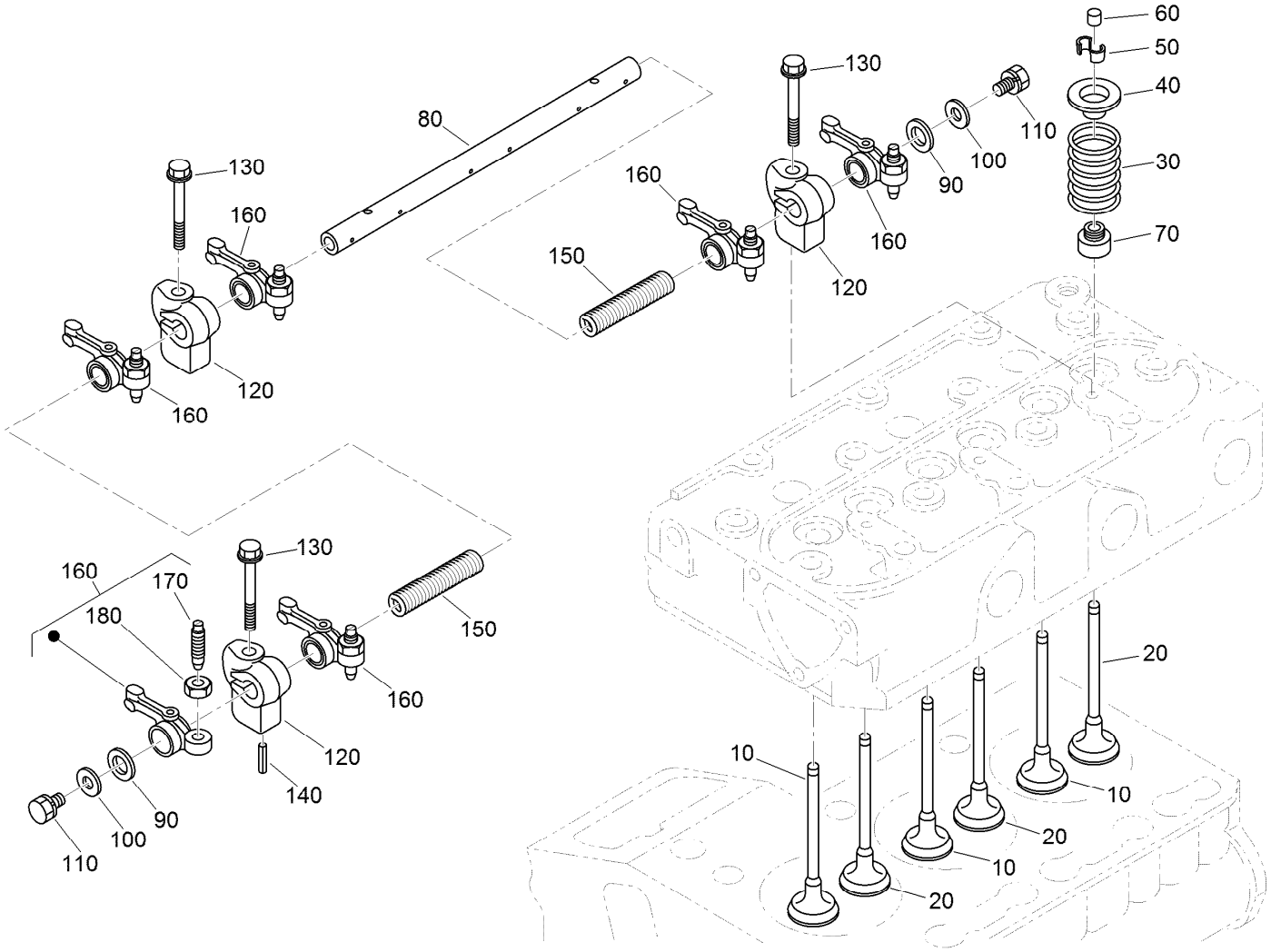


# Valve and Rocker Arm Assembly

| Ref. | Part Number | Qty. | Description |
|---|---|---|---|
| 10 | 112-2514 | 3 | Valve-Inlet |
| 20 | 112-2515 | 3 | Valve-Exhaust |
| 30 | 100-1823 | 6 | Spring-Valve |
| 40 | 100-1825 | 6 | Retainer-Spring, Valve |
| 50 | 120-3136 | 6 | Collet-Spring, Valve |
| 60 | 100-2155 | 6 | Cap-Valve |
| 70 | 100-1797 | 6 | Seal-Stem, Valve |
| 80 | 112-8341 | 1 | Shaft-Arm, Rocker |
| 90 | 100-2044 | 2 | Washer |

| Ref. | Part Number | Qty. | Description |
|---|---|---|---|
| 100 | 110-3832 | 2 | Washer-Plain |
| 110 | 100-1762 | 2 | Bolt |
| 120 | 110-3833 | 3 | Bracket-Arm, Rocker |
| 130 | 110-3834 | 3 | Bolt-Flange |
| 140 | 98-7602 | 1 | Pin-Spring |
| 150 | 112-8342 | 2 | Spring |
| 160 | 100-1884 | 6 | Rocker Arm ASM |
| 170 | 100-1885 | 6 | Screw-Adjusting |
| 180 | 100-1827 | 6 | Nut |

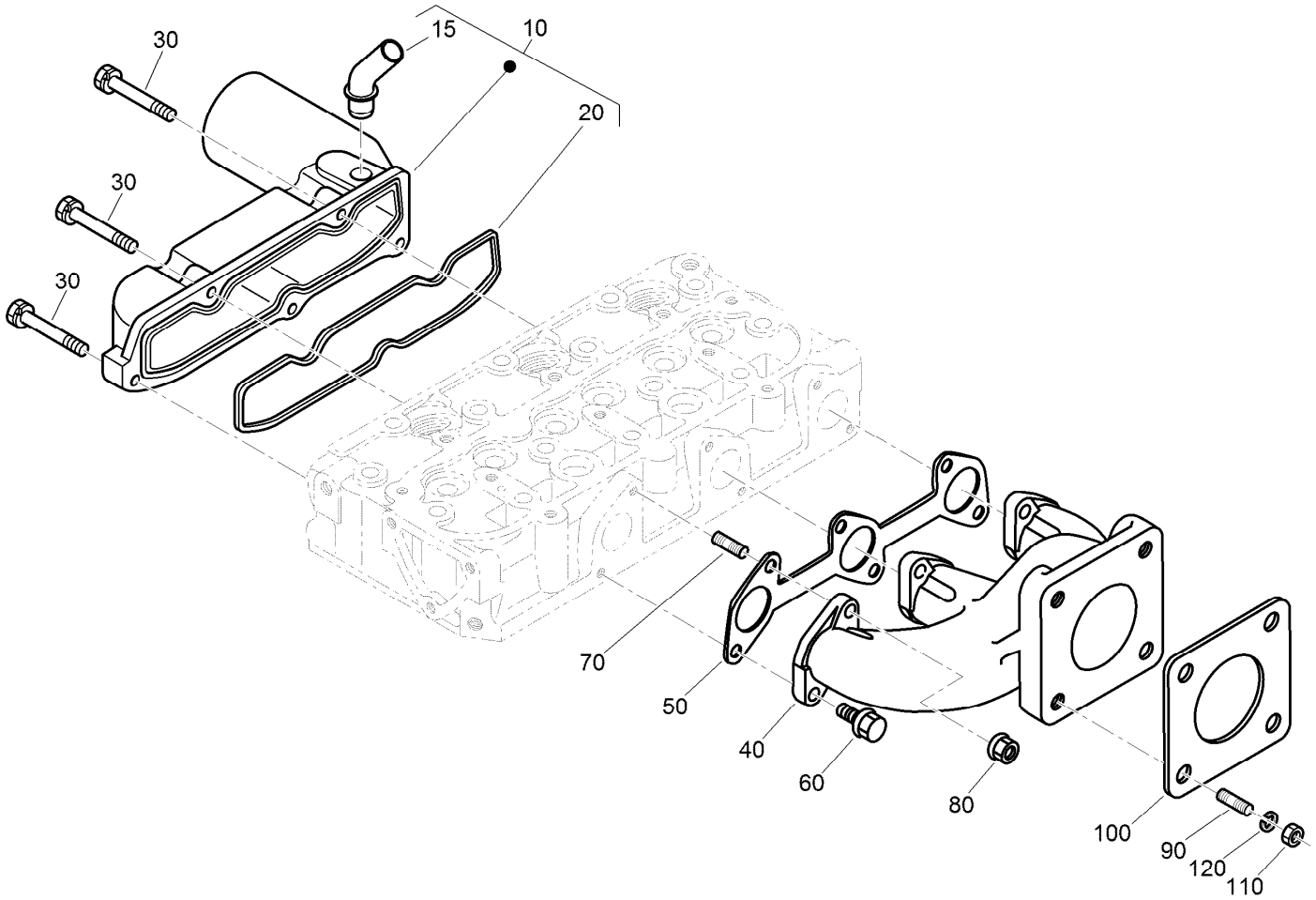


# Inlet and Exhaust Manifold Assembly

| *Ref.* | *Part Number* | *Qty.* | *Description* |
|---|---|---|---|
| 10 | 120-3141 | 1 | Intake Manifold ASM |
| 15 | 121-2417 | 1 | Pipe-Breather |
| 20 | 110-3838 | 1 | Gasket-Manifold, Intake |
| 30 | 98-9352 | 5 | Bolt |
| 40 | 110-3839 | 1 | Manifold-Exhaust |
| 50 | 110-3840 | 1 | Gasket-Manifold, Exhaust |
| 60 | 130-1154 | 3 | Screw-Hex HD |
| 70 | 130-1156 | 3 | Bolt-Stud |
| 80 | 100-1778 | 3 | Nut |
| 90 | 98-7769 | 4 | Stud |
| 100 | 99-8343 | 1 | Gasket-Muffler |
| 110 | 98-7534 | 4 | Nut |
| 120 | 105-2893 | 4 | Washer-Spring |

# Attachments and Accessories

## For 04384 Greensmaster 3250-D 2-Wheel Drive Traction Unit

| Product Name | Model/Part |
|---|---|
| Turf Evaluator | 04399 |
| CE Guard Kit | 04441 |
| Three-Wheel Drive Kit without ROPS | 04477 |
| Dethatching Unit | 04479 |
| Spiker Kit | 04494 |
| Tri-Roller Kit | 04495 |
| Leak Detector Kit | 04497 |
| Light Kit | 04554 |
| 8-Blade DPA Reel Mower | 04652 |
| 11-Blade DPA Reel Mower | 04654 |
| 14-Blade DPA Reel Mower | 04656 |
| Hose Adapter Kit | 100-6430 |
| Weight Kit, Greensmaster and Sand Pro/Infield Pro Traction Unit | 100-6442 |
| Oil Cooler Kit | 104-7701 |
| Ground-Following Suspension Kit | 104-9400 |
| Radiator Screen Kit | 105-9766 |
| Premium All Season Hydraulic Fluid (55 Gallon Drum) | 108-1177 |
| Premium All Season Hydraulic Fluid (5 Gallon Pail) | 108-1178 |
| Filter-Air | 108-3811 |
| Seperator Filter ASM | 110-9044 |
| Pull Link Kit for DPA Reel Mower Groomer | 112-9248 |
| Bimini Folding Shade Assembly | 115-4510 |
| Wireless Hourmeter | 115-4754 |
| Filter-Oil, Engine | 115-8189 |
| Hydraulic Hose Kit | 117-2721 |
| Premium Synthetic Bio-Degradable Hydraulic Fluid (5 Gallon Pail) | 119-2157 |
| Premium Synthetic Bio-Degradable Hydraulic Fluid (55 Gallon Drum) | 119-2158 |
| Spark Arrester Kit | 120-1951 |
| Premium Engine Oil 10w30 (55 Gallon Drum) | 121-6392 |
| Premium Engine Oil 10w30 (5 Gallon Pail) | 121-6393 |
| Toro Reel Paper (10 Pack) | 125-5610 |
| Toro Reel Shim (0.002in) | 125-5611 |
| MVP Filter Kit | 30086 |
| Arm Rest Kit | 30707 |
| Height-of-Cut Bar | 94-9010 |
| Weight Kit, Greensmaster 3100, 3150 or 3250-D Traction Unit with Three-Wheel Drive | 99-1645 |
| Tire-TURFMATE | 99-4506 |

**Notes:**

TORO®

Count on it.