Form No. 3450-425 Rev B

TORO®

Count on it.

Operator's Manual

Reelmaster® 5610-D Traction Unit

Model No. 03679—Serial No. 410400000 and Up

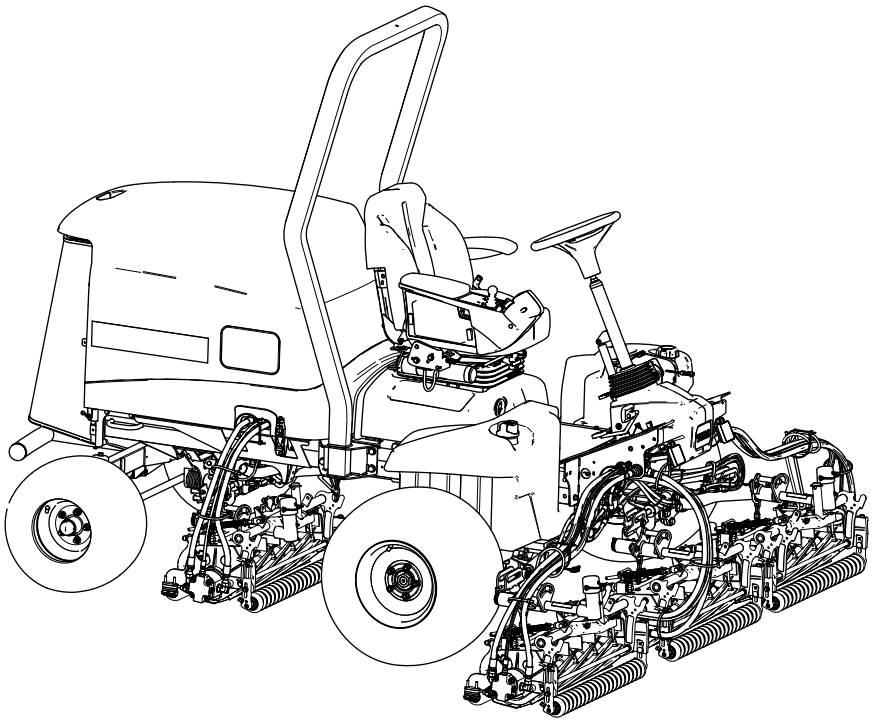

Register at www.Toro.com.
Original Instructions (EN)

CE UK CA

3450-425

This product complies with all relevant European directives. For details, please see the separate product specific Declaration of Conformity (DOC) sheet.

It is a violation of California Public Resource Code Section 4442 or 4443 to use or operate the engine on any forest-covered, brush-covered, or grass-covered land unless the engine is equipped with a spark arrester, as defined in Section 4442, maintained in effective working order or the engine is constructed, equipped, and maintained for the prevention of fire.

The enclosed engine owner's manual is supplied for information regarding the US Environmental Protection Agency (EPA) and the California Emission Control Regulation of emission systems, maintenance, and warranty. Replacements may be ordered through the engine manufacturer.

⚠ WARNING

CALIFORNIA
Proposition 65 Warning

Diesel engine exhaust and some of its constituents are known to the State of California to cause cancer, birth defects, and other reproductive harm.

Battery posts, terminals, and related accessories contain lead and lead compounds, chemicals known to the State of California to cause cancer and reproductive harm. Wash hands after handling.

Use of this product may cause exposure to chemicals known to the State of California to cause cancer, birth defects, or other reproductive harm.

Introduction

This machine is a ride-on, reel-blade lawn mower intended to be used by professional, hired operators in commercial applications. It is primarily designed for cutting grass on well-maintained turf. Using this product for purposes other than its intended use could prove dangerous to you and bystanders.

Read this information carefully to learn how to operate and maintain your product properly and to avoid injury and product damage. You are responsible for operating the product properly and safely.

Visit www.Toro.com for more information, including safety tips, training materials, accessory information, help finding a dealer, or to register your product.

Whenever you need service, genuine Toro parts, or additional information, contact an Authorized Service Dealer or Toro Customer Service and have the model and serial numbers of your product ready. Figure 1 identifies the location of the model and serial numbers on the product. Write the numbers in the space provided.

Important: **With your mobile device, you can scan the QR code on the serial number plate (if equipped) to access warranty, parts, and other product information.**

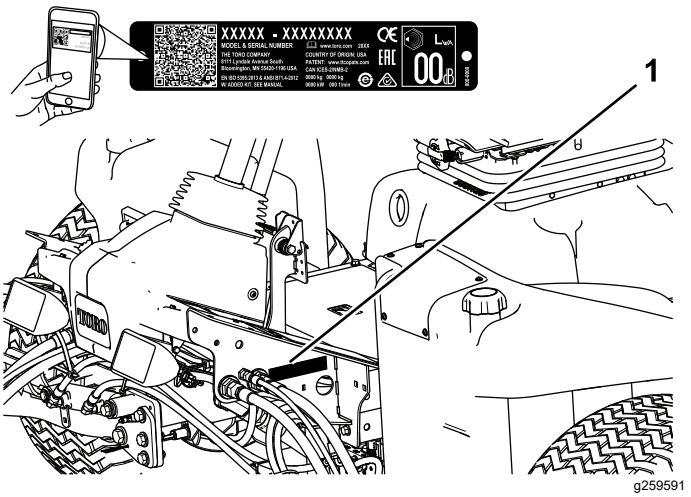

Figure 1

1. Model and serial number location

Model No. _____

Serial No. _____

This manual identifies potential hazards and has safety messages identified by the safety-alert symbol (Figure 2), which signals a hazard that may cause serious injury or death if you do not follow the recommended precautions.



g000502

Figure 2
Safety-alert symbol

This manual uses 2 words to highlight information. **Important** calls attention to special mechanical information and **Note** emphasizes general information worthy of special attention.

© 2023—The Toro® Company
8111 Lyndale Avenue South
Bloomington, MN 55420

Contact us at www.Toro.com.
Printed in the USA
All Rights Reserved

Contents

Safety 4
General Safety 4
Engine Emission Certification 4
Safety and Instructional Decals 5
Setup 10
1 Preparing the Machine 10
2 Adjusting the Control-Arm Position 10
3 Installing the Cutting Units 11
4 Using the Cutting-Unit Kickstand 19
5 Installing the CE Hood Lock 19
6 Applying the CE Decals 21
Product Overview 22
Controls 22
Seat Controls 24
Specifications 29
Attachments/Accessories 29
Before Operation 29
Before Operation Safety 29
Filling the Fuel Tank 30
Performing Daily Maintenance 31
Checking the Interlock Switches 31
During Operation 31
During Operation Safety 31
Starting the Engine 33
Hydraulic Filter-Restriction Indicator 33
Shutting Off the Engine 33
Cutting Grass with the Machine 33
Adjusting the Turf-Compensation Spring 33
Adjusting the Lift-Arm Counterbalance 34
Adjusting the Lift-Arm Turnaround Position 34
Setting the Reel Speed 36
Understanding the Diagnostic Light 37
Diesel Particulate Filter Regeneration 37
Operating Tips 50
After Operation 50
After Operation Safety 50
Hauling the Machine 50
Tie-Down Point Locations 50
Pushing or Towing the Machine 51
Maintenance 52
Maintenance Safety 52
Recommended Maintenance Schedule(s) 52
Daily Maintenance Checklist 54
Pre-Maintenance Procedures 55
Preparing for Maintenance 55
Opening the Hood 55
Closing the Hood 55
Opening the Screen 55
Closing the Screen 56
Tilting the Seat 56
Lowering the Seat 56
Jacking Point Locations 57
Lubrication 57
Greasing the Bearings and Bushings 57
Engine Maintenance 59
Engine Safety 59
Checking the Air Filter 59
Servicing the Air Cleaner 59
Resetting the Air Filter Service Indicator 60
Servicing the Engine Oil 60
Servicing the Diesel-Oxidation Catalyst (DOC) and the Soot Filter 62
Fuel System Maintenance 62
Draining Water from the Fuel-Water Separator 62
Replacing the Water-Separator Filter 63
Replacing the Engine Fuel Filter 63
Checking the Fuel Lines and Connections 64
Cleaning the Fuel-Pickup Tube Screen 64
Electrical System Maintenance 67
Electrical System Safety 67
Disconnecting the Battery 67
Connecting the Battery 67
Charging the Battery 68
Servicing the Battery 68
Replacing a Fuse-Block Fuse 68
Replacing the Telematic Fuse 69
Drive System Maintenance 69
Checking the Tire Air Pressure 69
Checking the Torque of the Wheel Nuts 69
Adjusting the Traction Drive for Neutral 69
Checking the Rear-Wheel Alignment 70
Adjusting the Rear Wheel Toe-in 70
Cooling System Maintenance 71
Cooling System Safety 71
Coolant Specification 71
Checking the Coolant Level 72
Removing Debris from the Cooling System 72
Brake Maintenance 74
Adjusting the Parking Brakes 74
Adjusting the Parking-Brake Latch 74
Belt Maintenance 75
Tensioning the Alternator Belt 75
Hydraulic System Maintenance 76
Hydraulic System Safety 76
Hydraulic Fluid Specifications 76
Checking the Hydraulic-Fluid Level 76
Checking the Hydraulic Lines and Hoses 77
Replacing the Hydraulic Filters 77
Hydraulic Fluid Capacity 78
Changing the Hydraulic Fluid 79
Cutting-Unit System Maintenance 80
Blade Safety 80
Checking the Reel-to-Bedknife Contact 80
Backlapping the Cutting Units 80
Chassis Maintenance 82
Inspecting the Seat Belt 82
Extended Maintenance 82

Chassis and Engine 82
Cleaning 83
Washing the Machine 83
Storage 83
Storage Safety 83
Preparing the Traction Unit 83
Preparing the Engine 84
Storing the Battery 84

Safety

This machine has been designed in accordance with EN ISO 5395 (when you complete the setup procedures) and ANSI B71.4-2017.

General Safety

This product is capable of amputating hands and feet and of throwing objects.

- Read and understand the contents of this *Operator's Manual* before starting the engine.
- Use your full attention while operating the machine. Do not engage in any activity that causes distractions; otherwise, injury or property damage may occur.
- Do not put your hands or feet near moving components of the machine.
- Do not operate the machine without all guards and other safety protective devices in place and functioning properly on the machine.
- Keep bystanders and children out of the operating area. Never allow children to operate the machine.
- Shut off the engine, remove the key, and wait for all movement to stop before you leave the operator's position. Allow the machine to cool before adjusting, servicing, cleaning, or storing it.

Improperly using or maintaining this machine can result in injury. To reduce the potential for injury, comply with these safety instructions and always pay attention to the safety-alert symbol ⚠, which means Caution, Warning, or Danger—personal safety instruction. Failure to comply with these instructions may result in personal injury or death.

Engine Emission Certification

The engine in this machine is EPA Tier 4 Final and stage 3b compliant.

Safety and Instructional Decals

Safety decals and instructions are easily visible to the operator and are located near any area of potential danger. Replace any decal that is damaged or missing.



decalbatterysymbols

Battery Symbols

Some or all of these symbols are on your battery.

1. Explosion hazard
2. No fire, open flame, or smoking
3. Caustic liquid/chemical burn hazard
4. Wear eye protection.
5. Read the *Operator's Manual*.
6. Keep bystanders away from the battery.
7. Wear eye protection; explosive gases can cause blindness and other injuries.
8. Battery acid can cause blindness or severe burns.
9. Flush eyes immediately with water and get medical help fast.
10. Contains lead; do not discard

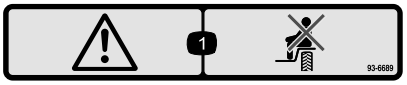

decal93-6689

93-6689

1. Warning—do not carry passengers.

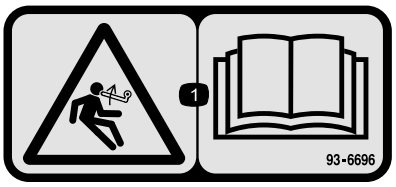

decal93-6696

93–6696

1. Stored energy hazard—read the *Operator's Manual*.

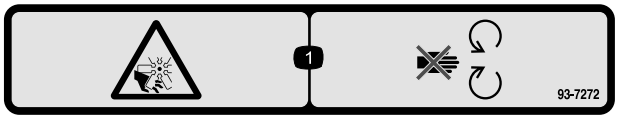

decal93-7272

93-7272

1. Cutting/dismemberment hazard; fan—stay away from moving parts.

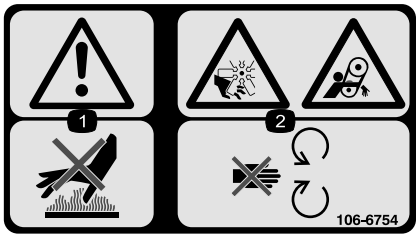

decal106-6754

106-6754

1. Warning—do not touch the hot surface.
2. Cutting/dismemberment hazard, fan; entanglement hazard, belt—stay away from moving parts.



decal106-6755

106-6755

1. Engine coolant under pressure.
2. Explosion hazard—read the *Operator's Manual.*
3. Warning—do not touch the hot surface.
4. Warning—read the *Operator's Manual.*

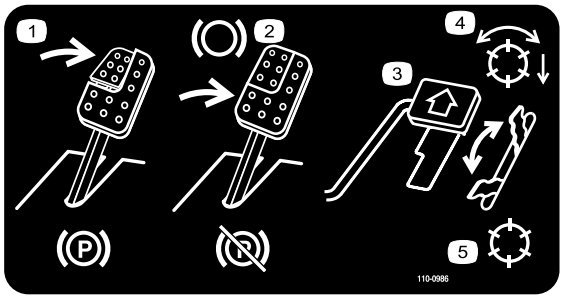

decal110-0986

110-0986

1. Press the brake pedal and parking brake pedal to set the parking brake.
2. Press the brake pedal to apply the brake.
3. Press the traction pedal to move the machine forward.
4. Reel enabled mode
5. Transport mode

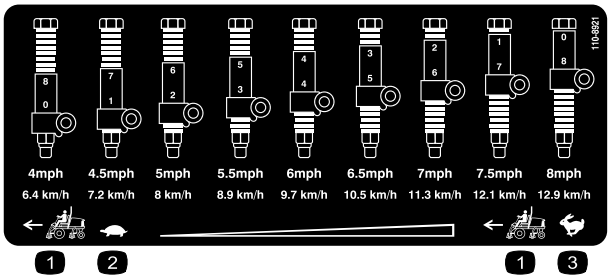

decal110-8921

110-8921

1. Traction unit speed
2. Slow
3. Fast

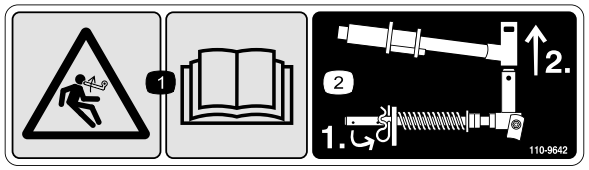

decal110-9642

110-9642

1. Stored energy hazard—read the *Operator's Manual.*
2. Move the cotter pin to the hole closest to the rod bracket and then remove the lift arm and pivot yoke.

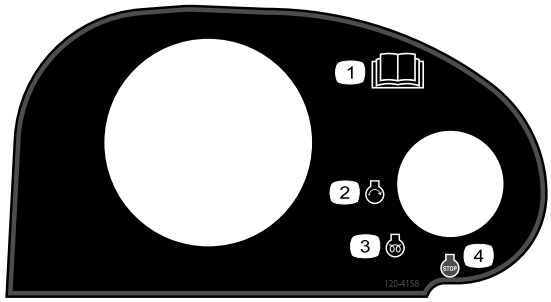

decal120-4158

120–4158

1. Read the *Operator's Manual*.
2. Engine—start
3. Engine—preheat
4. Engine—stop

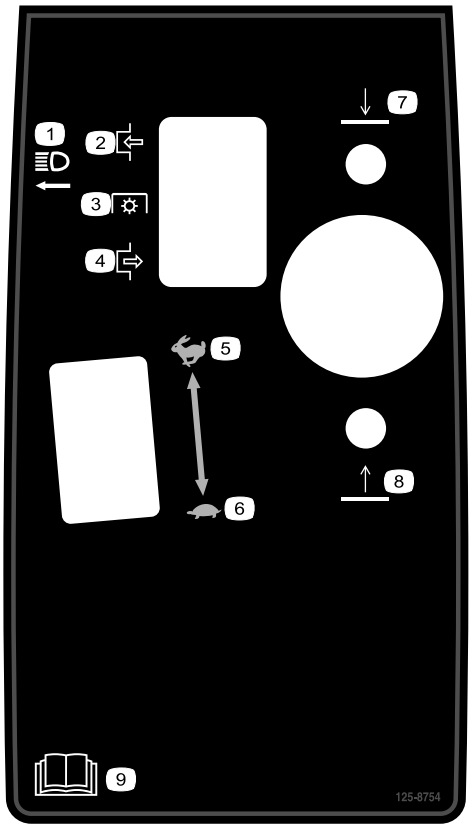

decal125-8754

125–8754

1. Headlights
2. Engage
3. Power take-off (PTO)
4. Disengage
5. Fast
6. Slow
7. Lower the cutting units
8. Raise the cutting units
9. Read the *Operator's Manual*.



decal133-8062

133-8062

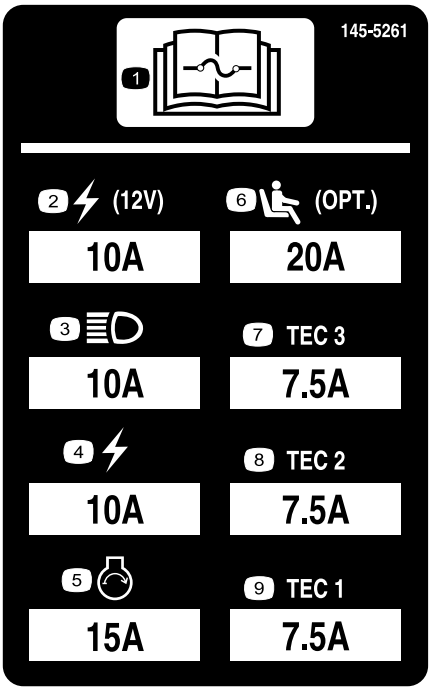

decal145-5261

145-5261

1. Read the *Operator's Manual* for fuse information.
2. Power point (12 V)
3. Headlights
4. Electric
5. Engine start
6. Air ride seat suspension (optional)
7. TEC controller
8. TEC controller
9. TEC controller

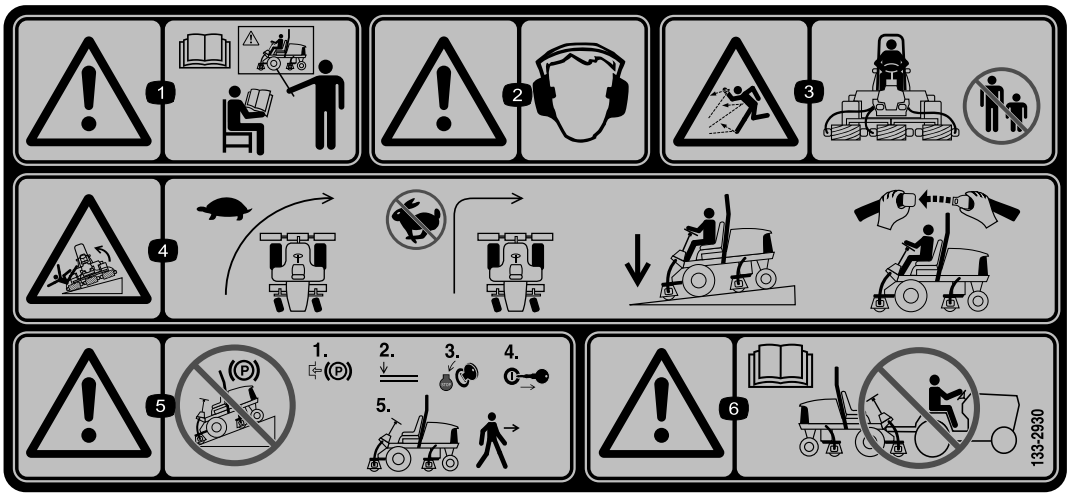

decal133-2930

133-2930

1. Warning—do not operate this machine unless you are trained.
2. Warning—wear hearing protection.
3. Thrown object hazard—keep bystanders out of the operating area.
4. Tipping hazard—drive slowly when turning; do not turn sharply while traveling fast; only drive on slopes with the cutting units lowered; always wear a seatbelt.
5. Warning—do not park on slopes; engage the parking brake, lower the cutting units, shut off the engine, and remove the ignition key before leaving the machine.
6. Warning—read the *Operator's Manual*; do not tow the machine.



decal133-2931

133-2931

Note: This machine complies with the industry standard stability test in the static lateral and longitudinal tests with the maximum recommended slope indicated on the decal. Review the instructions for operating the machine on slopes in the *Operator's Manual* as well as the conditions in which you would operate the machine to determine whether you can operate the machine in the conditions on that day and at that site. Changes in the terrain can result in a change in slope operation for the machine. If possible, keep the cutting units lowered to the ground while operating the machine on slopes. Raising the cutting units while operating on slopes can cause the machine to become unstable.

1. Warning—read the *Operator's Manual*; do not operate this machine unless you are trained.
2. Warning—wear hearing protection.
3. Thrown object hazard—keep bystanders away.
4. Tipping hazard—do not drive across or down slopes greater than 15°; only drive on slopes with the cutting units lowered; always wear a seatbelt.
5. Warning—do not park on slopes; engage the parking brake, lower the cutting units, shut off the engine, and remove the ignition key before leaving the machine.
6. Warning—read the *Operator's Manual*; do not tow the machine.

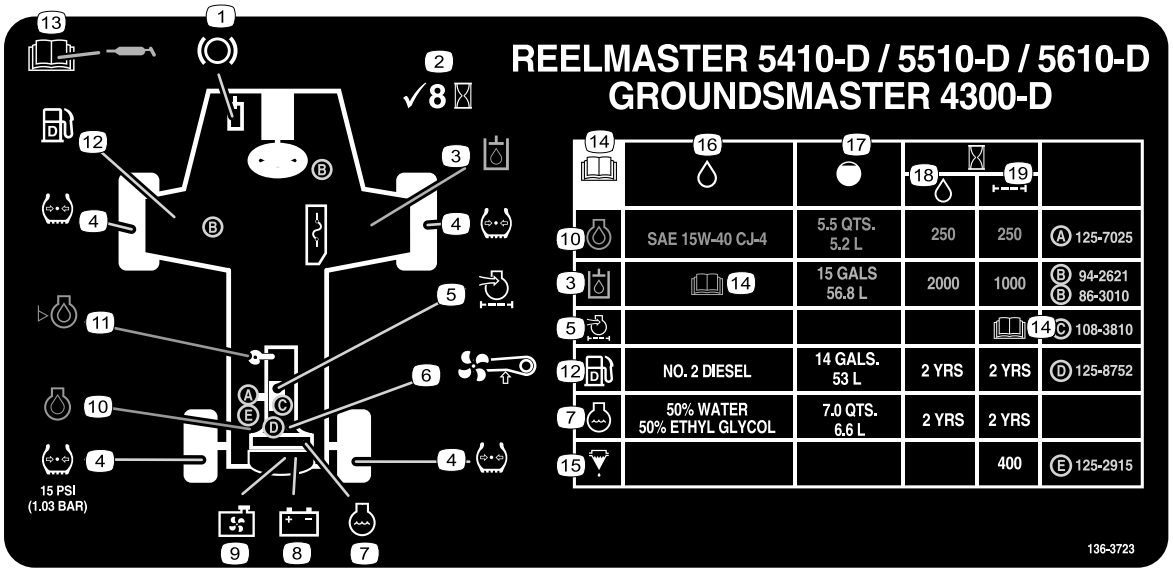

decal136-3723

136-3723

1. Brake functions
2. Check every 8 hours.
3. Hydraulic fluid
4. Tire pressure
5. Engine air filter
6. Fan belt
7. Engine coolant
8. Battery
9. Radiator screen
10. Engine oil
11. Engine oil level
12. Fuel
13. Read the *Operator's Manual* for lubrication information.
14. Read the *Operator's Manual*.
15. Fuel/Water separator
16. Fluids
17. Capacity
18. Fluid interval (hours)
19. Filter interval (hours)

Setup

Loose Parts

Use the chart below to verify that all parts have been shipped.

Procedure	Description	Qty.	Use
1	No parts required	–	Prepare the machine.
2	No parts required	–	Adjust the control-arm position.
3	Right front hose guide Left front hose guide	1 1	Install the cutting units.
4	Cutting-unit kickstand	1	Install the cutting-unit kickstand.
5	Hood lock, seal, and jam nut Washer	1 1	Install the CE hood lock.
6	CE decal Production year decal Warning decal	1 1 1	Apply the CE decals.

Media and Additional Parts

Description	Qty.	Use
Operator's Manual	1	Read the Operator's Manual before operating the machine.
Engine operator's manual	1	Read the manual before operating the engine.
Cutting performance paper	1	Adjust the cutting-unit bedknife to reel.
Shim	1	Adjust the cutting-unit bedknife to reel.

Note: Determine the left and right sides of the machine from the normal operating position.

1

Preparing the Machine

No Parts Required

Procedure

1. Park the machine on a level surface, lower the cutting units, and engage the parking brake.
2. Shut off the engine, remove the key, and wait for all moving parts to stop.
3. Check the tire air pressure before use; refer to Checking the Tire Air Pressure (page 69).

   Note: The tires are overinflated for shipping. Adjust the tire air pressure before operating the machine.
4. Check the hydraulic-fluid level; refer to Checking the Hydraulic-Fluid Level (page 76).
5. Grease the machine; refer to Greasing the Bearings and Bushings (page 57).

   Important: **Failure to properly grease the machine will result in premature failure of critical parts.**
6. Open the hood and check the coolant level; refer to Checking the Coolant Level (page 72).
7. Check the level of the engine-oil level, and close and latch the hood; refer to Checking the Level of the Engine Oil (page 60).

   Note: The engine ships with oil in the crankcase; however, check the oil level before and after the engine is first started.

2

Adjusting the Control-Arm Position

No Parts Required

Procedure

You can adjust the control-arm position for your comfort.

1. Loosen the 2 bolts securing the control arm to the retaining bracket (Figure 3).

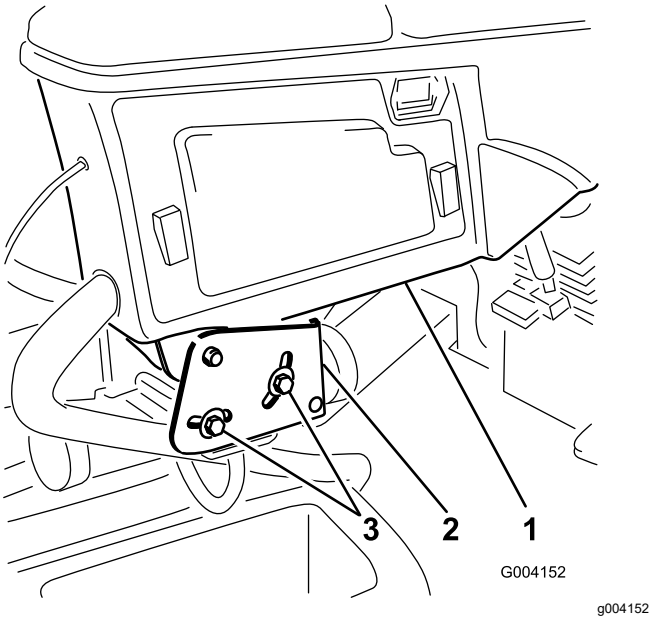

Figure 3

1. Control arm
2. Retaining brackets
3. Bolt

2. Rotate the control arm to the desired position and tighten the 2 bolts.

3

Installing the Cutting Units

Parts needed for this procedure:

1	Right front hose guide
1	Left front hose guide

Preparing the Machine

1. Remove the reel motors from the shipping brackets.
2. Remove and discard the shipping brackets.
3. At each cutting unit lift arm, remove the lynch pin that secures the cap to the lift arm pivot yoke, and remove the cap (Figure 4).

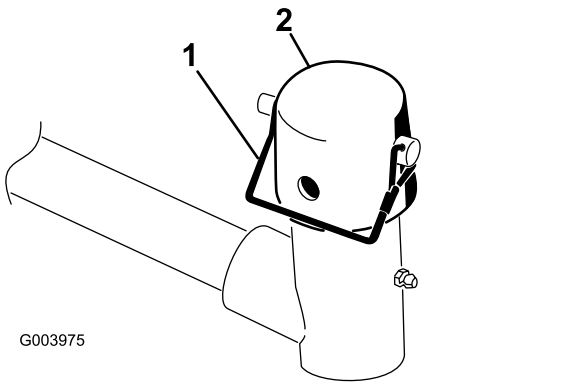

Figure 4

1. Lynch pin
2. Cap

Preparing the Cutting Units

1. Remove the cutting units from the cartons.
2. Assemble and adjust as described in the cutting unit *Operator's Manual*.
3. Make sure that the counterweight (Figure 5) is installed at the proper end of the cutting unit as described in the cutting unit *Operator's Manual*.

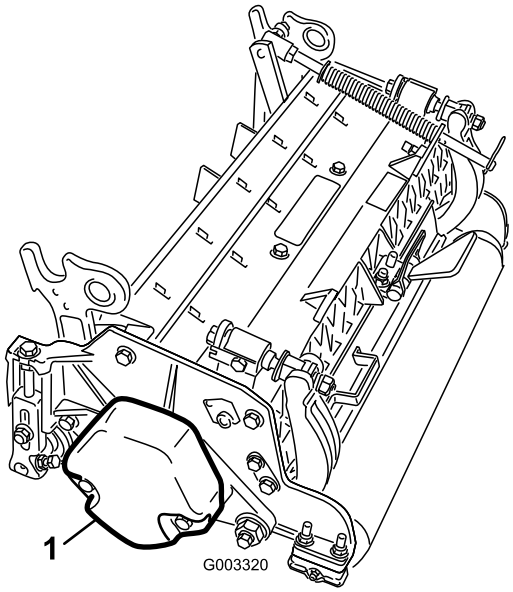

g003320

Figure 5

1. Counterweight

Positioning the Turf Compensating Spring and Installing the Hose Guide

Cutting Units 4

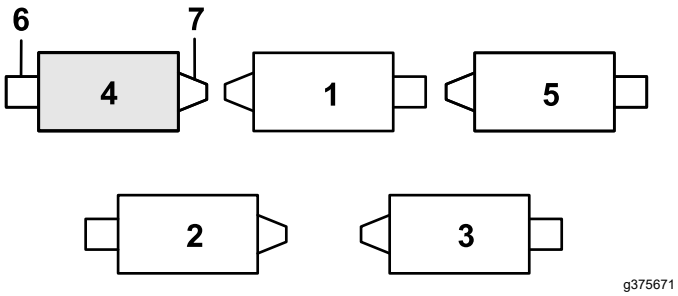

g375671

Figure 6

1. Cutting unit 1
2. Cutting unit 2
3. Cutting unit 3
4. Cutting unit 4
5. Cutting unit 5
6. Reel motor
7. Weight

1. If the hairpin is installed in the rear hole of the compensation-spring rod—remove the hairpin and insert it in the hole next to the bracket (Figure 7).

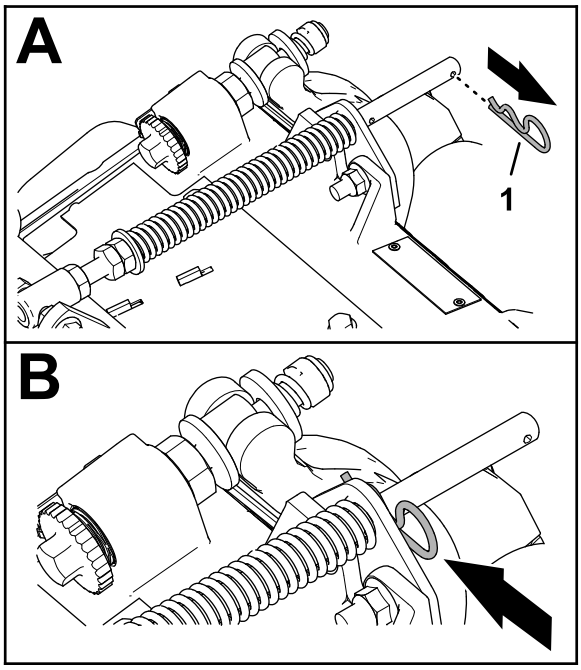

g375689

Figure 7

1. Hairpin

2. Remove the 2 flange locknuts (3/8 inch) and 2 carriage bolts (3/8 x 1-1/4 inches) that secure the turf-compensator bracket to the cutting-unit frame (Figure 8).

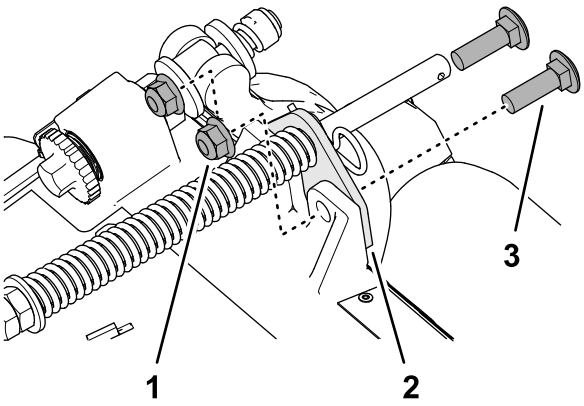

g375690

Figure 8

1. Carriage bolt (3/8 x 1-1/4 inches)
2. Turf-compensator bracket
3. Flange locknut (3/8 inch)

3. Remove the flange locknut (3/8 inch) that secures the capscrew of the turf compensation spring to the right tab of the carrier frame, and remove the compensation spring from the cutting unit (Figure 9).

   Note: Do not remove the flange serrated nut from the capscrew.

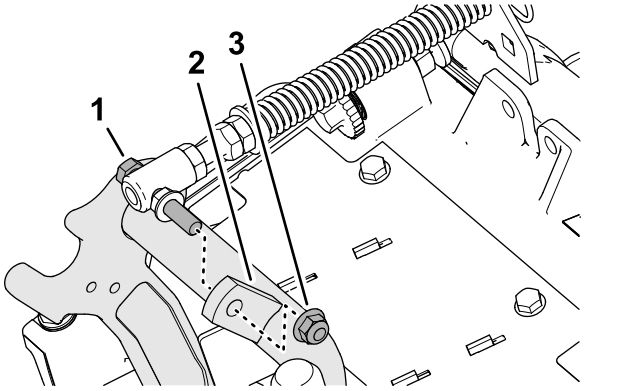

Figure 9

1. Capscrew
2. Right tab (Carrier frame)
3. Flange locknut (3/8 inch)

4. Assemble the capscrew of the turf compensation spring to the right tab of the carrier frame (Figure 10) with the flange locknut (3/8 inch).

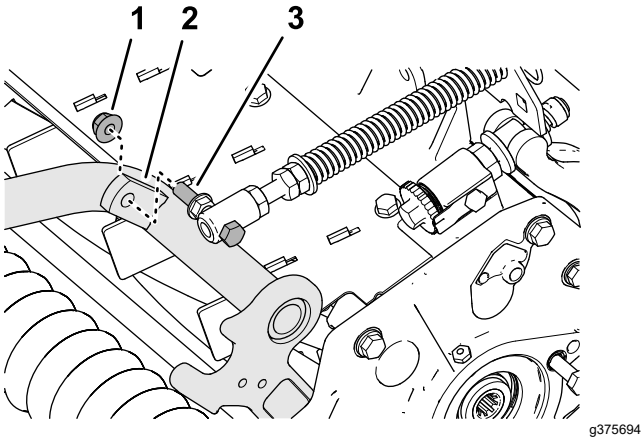

Figure 10

1. Flange locknut (3/8 inch)
2. Right tab (Carrier frame)
3. Capscrew

5. Align the studs of the left hose guide with the holes in the cutting-unit frame and the turf-compensator bracket (Figure 11).

   Note: The support loop of the hose guide aligns toward the centerline of the machine.

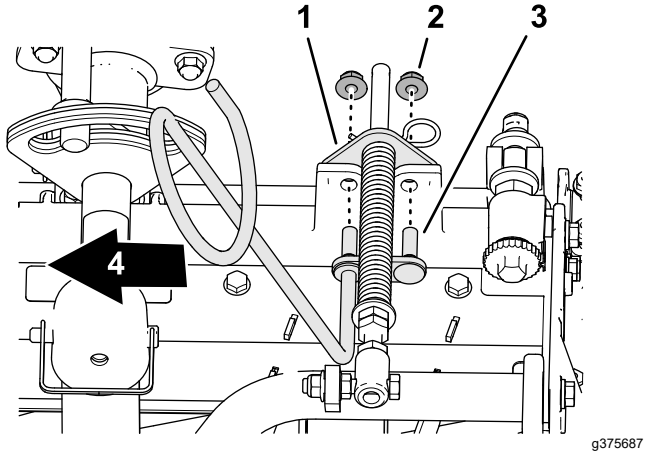

Figure 11

1. Turf-compensator bracket
2. Flange locknut (3/8 inch)
3. Stud (hose guide)
4. Inboard

6. Assemble the hose guide and turf-compensator bracket to the cutting-unit frame with the 2 flange locknuts (3/8 inch).
7. Torque the locknuts and bolts to 37 to 45 N·m (27 to 33 ft-lb).

Installing the Hose Guide

Cutting Units 5

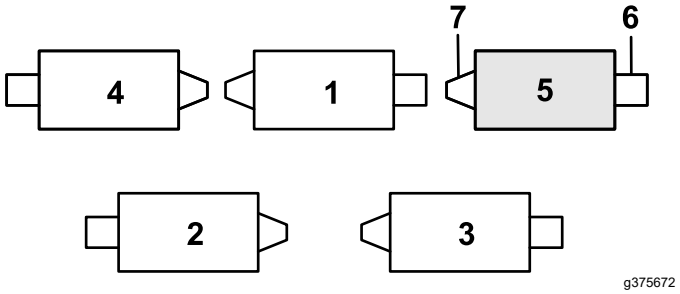

Figure 12

1. Cutting unit 1
2. Cutting unit 2
3. Cutting unit 3
4. Cutting unit 4
5. Cutting unit 5
6. Reel motor
7. Weight

1. If the hairpin is installed in the rear hole of the compensation-spring rod—remove the hairpin and insert it in the hole next to the bracket (Figure 12).

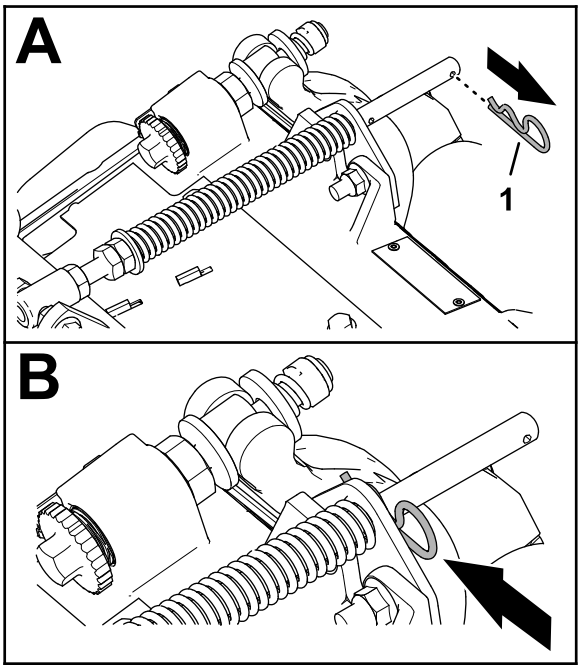

g375689

Figure 13

1. Hairpin

2. Remove the 2 flange locknuts (3/8 inch) and 2 carriage bolts (3/8 x 1-1/4 inches) that secure the turf-compensator bracket to the cutting-unit frame (Figure 14).

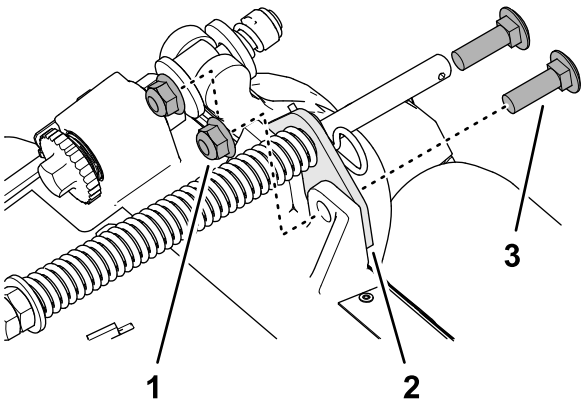

g375690

Figure 14

1. Carriage bolt (3/8 x 1-1/4 inches)
2. Turf-compensator bracket
3. Flange locknut (3/8 inch)

3. Align the studs of the right hose guide with the holes in the cutting-unit frame and the turf-compensator bracket (Figure 15).

   Note: Ensure that the support loop of the hose guide aligns toward the centerline of the machine.

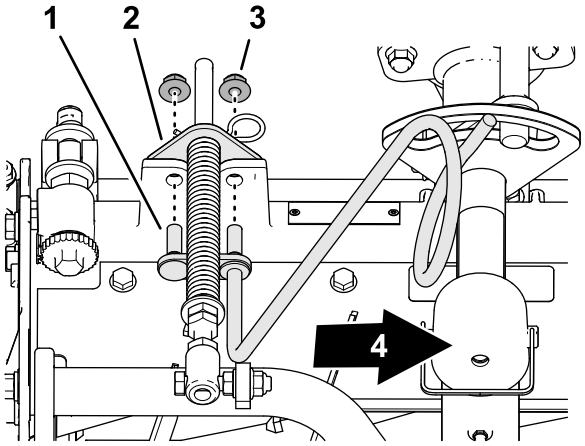

g375688

Figure 15

1. Stud (hose guide)
2. Turf-compensator bracket
3. Flange locknut (3/8 inch)
4. Inboard

4. Assemble the hose guide and turf-compensator bracket to the cutting-unit frame with the 2 flange locknuts (3/8 inch).
5. Torque the locknuts to 37 to 45 N·m (27 to 33 ft-lb).

Positioning the Turf Compensating Spring

Cutting Unit 2

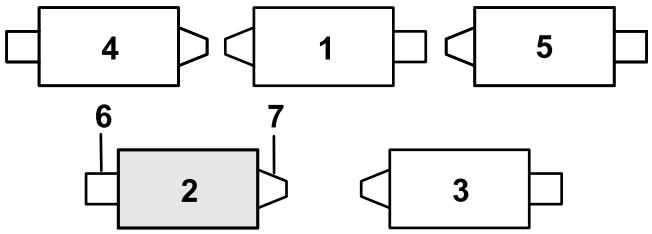

g379514

Figure 16

1. Cutting unit 1
2. Cutting unit 2
3. Cutting unit 3
4. Cutting unit 4
5. Cutting unit 5
6. Reel motor
7. Weight

1. If the hairpin is installed in the rear hole of the compensation-spring rod—remove the hairpin and insert it in the hole next to the bracket (Figure 17).

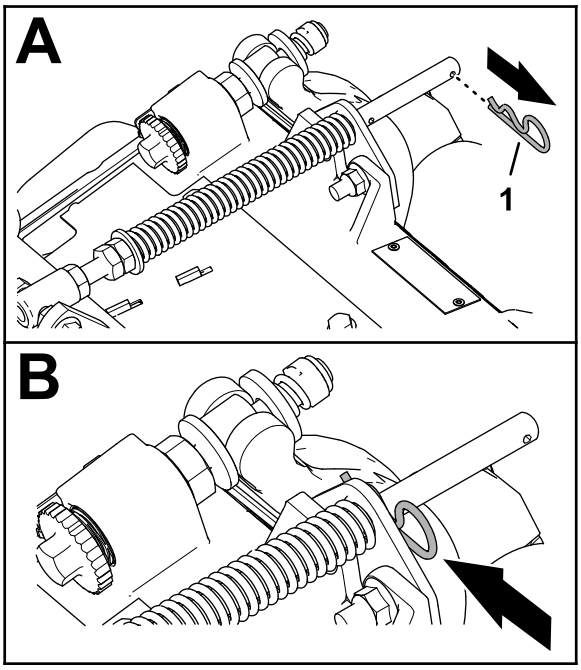

g375689

Figure 17

1. Hairpin

2. Remove the 2 flange locknuts (3/8 inch) and 2 carriage bolts (3/8 x 1-1/4 inches) that secure the turf-compensator bracket to the cutting-unit frame (Figure 18).

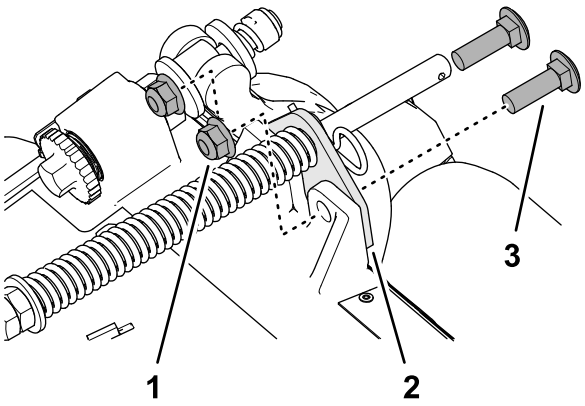

g375690

Figure 18

1. Carriage bolt (3/8 x 1-1/4 inches)
2. Turf-compensator bracket
3. Flange locknut (3/8 inch)

3. Remove the flange locknut (3/8 inch) that secures the capscrew of the turf compensation spring to the right tab of the carrier frame, and remove the compensation spring from the cutting unit (Figure 19).

   Note: Do not remove the flange serrated nut from the capscrew.

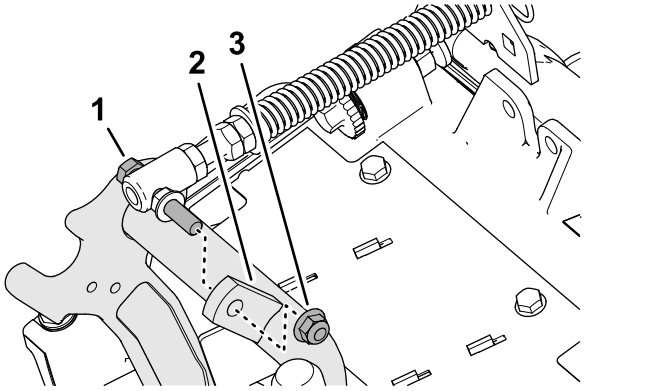

g375691

Figure 19

1. Capscrew
2. Right tab (Carrier frame)
3. Flange locknut (3/8 inch)

4. Assemble the capscrew of the turf compensation spring to the right tab of the carrier frame (Figure 20) with the flange locknut (3/8 inch).

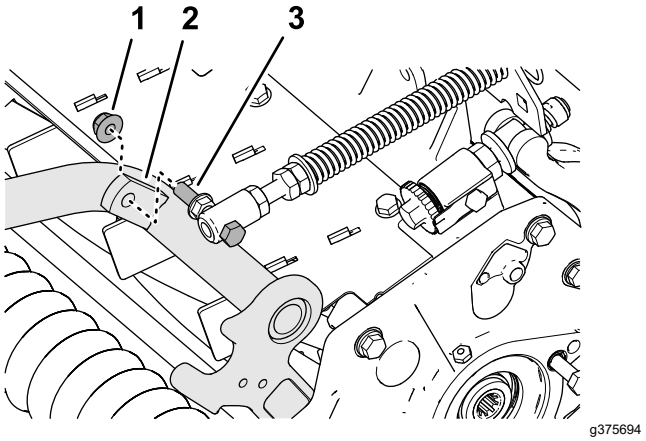

g375694

Figure 20

1. Flange locknut (3/8 inch)
2. Right tab (Carrier frame)
3. Capscrew

5. Align the holes in the turf-compensator bracket with the holes in the cutting-unit frame (Figure 21).

   Note: The support loop of the hose guide aligns toward the centerline of the machine.

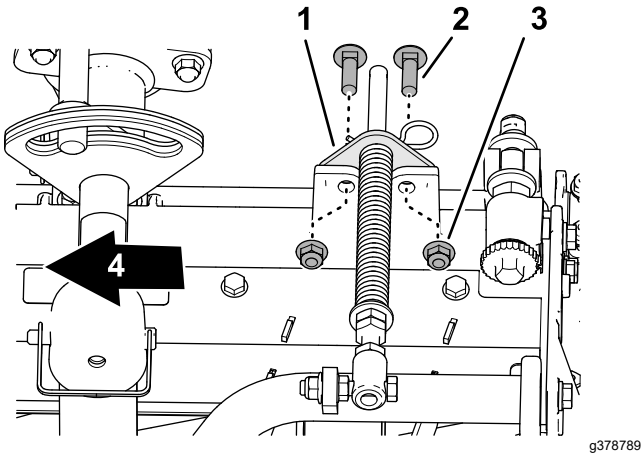

Figure 21

1. Turf-compensator bracket
2. Carriage bolt (3/8 x 1-1/4 inches)
3. Flange locknut (3/8 inch)
4. Inboard

6. Assemble the turf-compensator bracket to the cutting-unit frame with the 2 carriage bolts (3/8 x 1-1/4 inches) and 2 flange locknuts (3/8 inch).
7. Torque the locknuts and bolts to 37 to 45 N·m (27 to 33 ft-lb).

Installing the Kickstand

For each cutting unit, secure the kickstand to the chain bracket with the snapper pin (Figure 22).

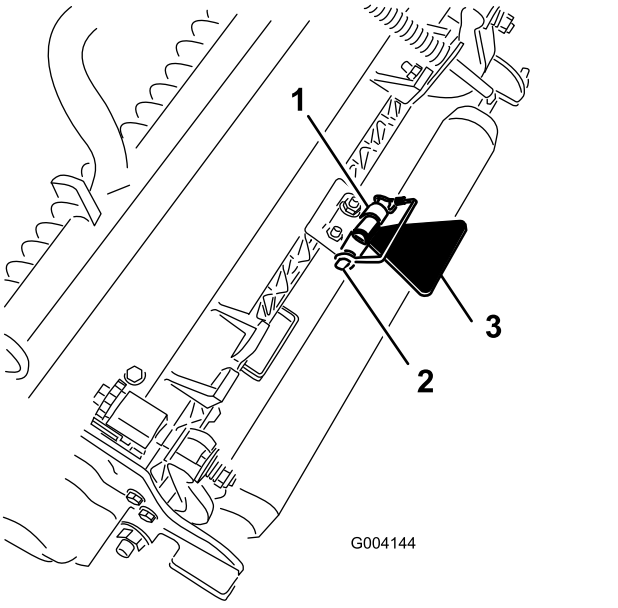

Figure 22

1. Chain bracket
2. Snapper pin
3. Cutting-unit kickstand

Installing the Front Cutting Units to the Lift Arms

1. Slide a cutting unit under the lift arm (Figure 23).

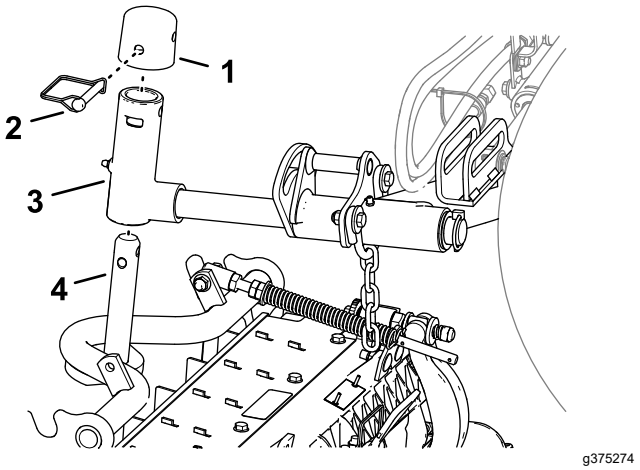

Figure 23

1. Cap
2. Snapper pin
3. Lift-arm yoke
4. Carrier frame shaft

2. Assemble the lift-arm yoke onto the carrier frame shaft.
3. Assemble the cap to the pivot-arm shaft, and align the holes in the carrier frame shaft, pivot arm shaft, and cap.
4. Secure the cap and the carrier-frame shaft to the lift-arm yoke with the snapper pin.

   Locking the Cutting-Unit Pivot for Cutting Grass on a Hill Side—Lock the cutting-unit pivots to prevent the cutting units from rotating downhill when cutting across the face of a hill. Use the hole in the lift-arm pivot shaft (Figure 24) to lock the cutting unit. Use the slot for a steering cutting unit.

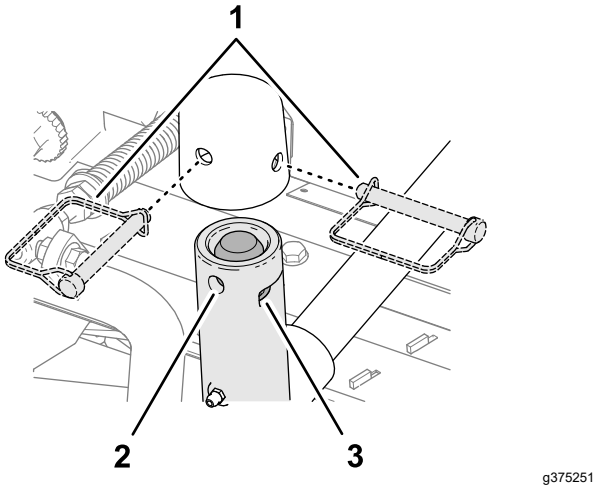

Figure 24

1. Snap-pin positions
2. Hole (lift-arm pivot shaft)
3. Slot (lift-arm pivot shaft)

Installing the Rear Cutting Units to the Lift Arms

Cutting Units adjusted for a 1.2 cm (3/4 inch) or Higher Height of Cut

1. Slide a cutting unit under the lift arm (Figure 25).

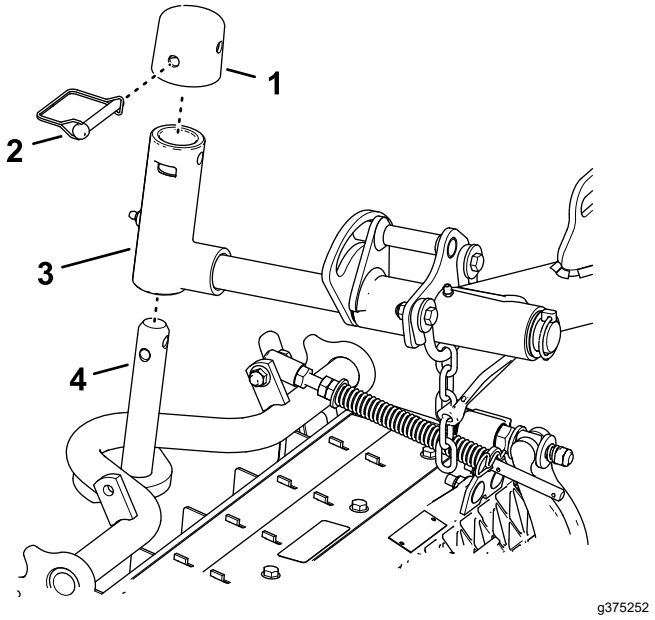

Figure 25

1. Cap
2. Snapper pin
3. Lift-arm yoke
4. Carrier frame shaft

2. Assemble the lift-arm yoke onto the carrier frame shaft.
3. Assemble the cap to the pivot-arm shaft, and align the holes in the carrier frame shaft, pivot arm shaft, and cap.
4. Secure the pivot arm shaft and cap to the carrier frame shaft with the snapper pin.

   Locking the Cutting-Unit Pivot for Cutting Grass on a Hill Side—Lock the cutting-unit pivots to prevent the cutting units from rotating downhill when cutting across the face of a hill. Use the hole in the lift-arm pivot shaft (Figure 25) to lock the cutting unit. Use the slot for a steering cutting unit.

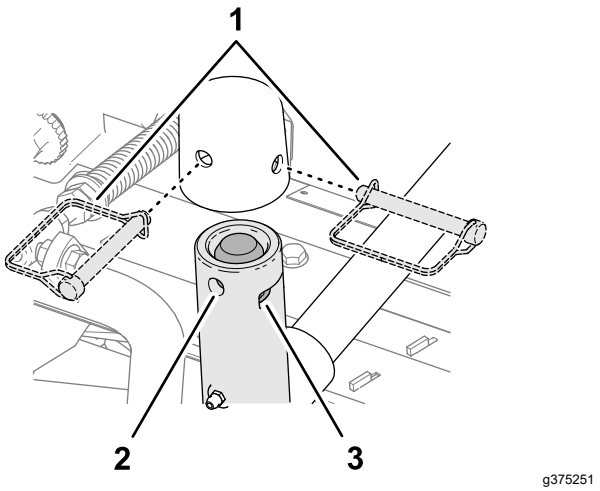

Figure 26

1. Snap-pin positions
2. Hole (lift-arm pivot shaft)
3. Slot (lift-arm pivot shaft)

5. Repeat steps 1 and 2 for the other rear cutting unit.

Installing the Rear Cutting Units to the Lift Arms

Cutting Units adjusted for a 1.2 cm (3/4 inch) or Lower Height of Cut

1. Remove the lynch pin and washer securing the to the lift-arm pivot shaft to the lift arm, and slide the pivot shaft out of the lift arm (Figure 27).

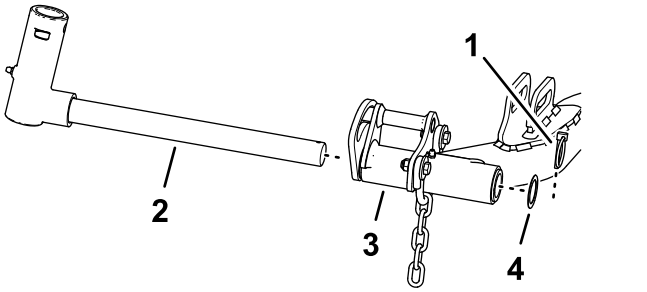

Figure 27

1. Lift-arm pivot shaft 4.
2. Lift-arm pivot shaft
3. Lift arm (rear cutting unit)
4. Washer

2. Assemble the lift-arm yoke onto the carrier frame shaft (Figure 28).

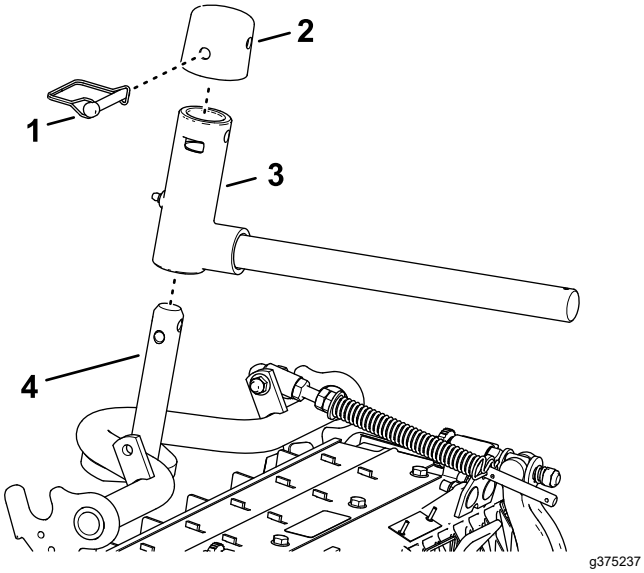

Figure 28

1. Cap
2. Snapper pin
3. Lift-arm yoke
4. Carrier frame shaft

3. Assemble the cap to the pivot-arm shaft, and align the holes in the carrier frame shaft, pivot arm shaft, and cap.
4. Secure the pivot arm shaft and cap to the carrier frame shaft with the snapper pin.

   Locking the Cutting-Unit Pivot for Cutting Grass on a Hill Side—Lock the cutting-unit pivots to prevent the cutting units from rotating downhill when cutting across the face of a hill. Use the hole in the lift-arm pivot shaft (Figure 29) to lock the cutting unit. Use the slot for a steering cutting unit.

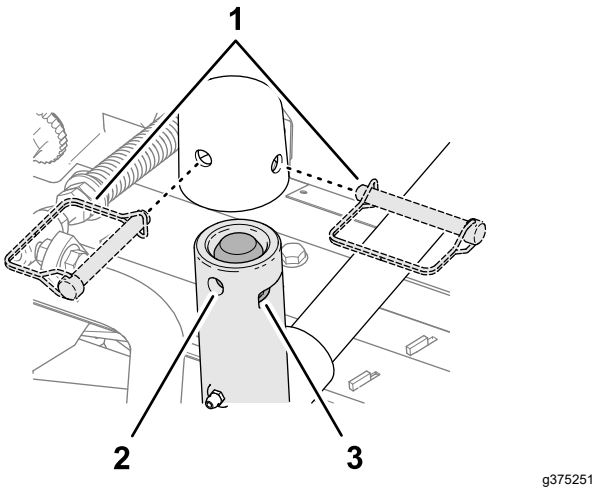

Figure 29

1. Snap-pin positions
2. Hole (lift-arm pivot shaft)
3. Slot (lift-arm pivot shaft)

5. Slide a cutting unit under the lift arm (Figure 30).

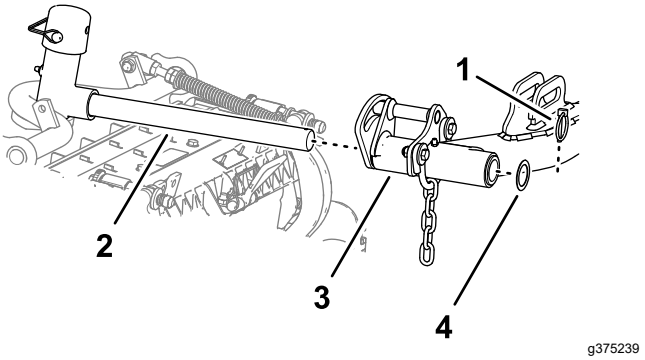

Figure 30

1. Lynch pin
2. Lift-arm shaft
3. Lift arm
4. Washer

6. Insert the lift-arm shaft into the lift arm, and secure shaft to the arm with the lynch pin and washer.
7. Repeat steps 1 through 6 for the other rear cutting unit.

Installing the Cutting Unit Lift-Arm Chains

Secure the lift-arm chain to the chain bracket with the snapper pin (Figure 31).

Note: Use the number of chain links described in the cutting unit *Operator's Manual*.

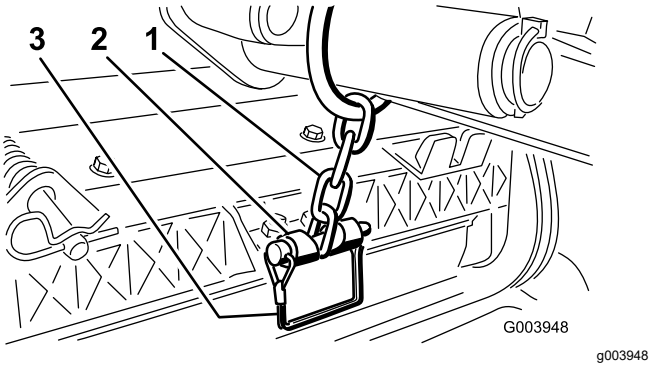

Figure 31

1. Lift-arm chain
2. Chain bracket
3. Snapper pin

Installing the Reel Motors

1. Coat the spline shaft of the reel motor with clean grease.
2. Oil the reel motor O-ring and install it onto the motor flange.
3. Install the motor by rotating it clockwise so that the motor flanges clear the bolts (Figure 32).

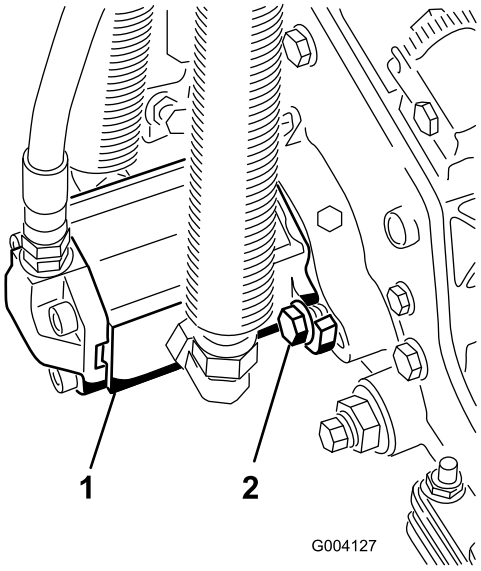

g004127

Figure 32

1. Reel-drive motor
2. Mounting bolts

4. Rotate the motor counterclockwise until the flanges encircle the bolts, and then tighten the bolts.

   Important: **Make sure that the reel motor hoses are not twisted, kinked, or at risk of being pinched.**

5. Torque the mounting bolts to (27 to 33 ft-lb).

4

Using the Cutting-Unit Kickstand

Parts needed for this procedure:

1	Cutting-unit kickstand

Procedure

Whenever you need to tip the cutting unit to expose the bedknife/reel, prop up the rear of the cutting unit with the kickstand to make sure that the nuts on the back end of the bedbar-adjusting screws are not resting on the work surface (Figure 33).

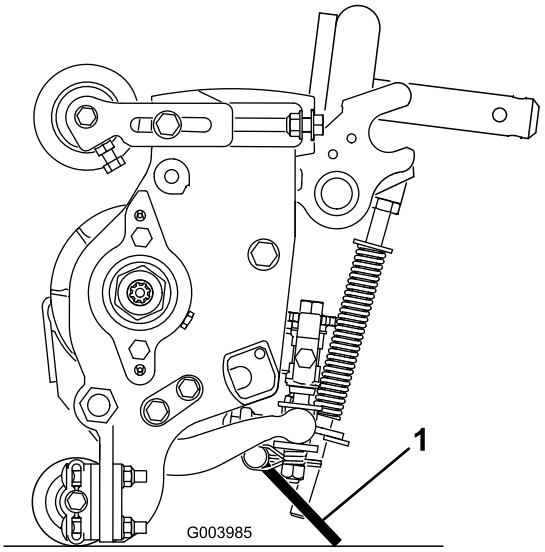

g003985

Figure 33

1. Cutting-unit kickstand

Secure the kickstand to the chain bracket with the snapper pin (Figure 34).

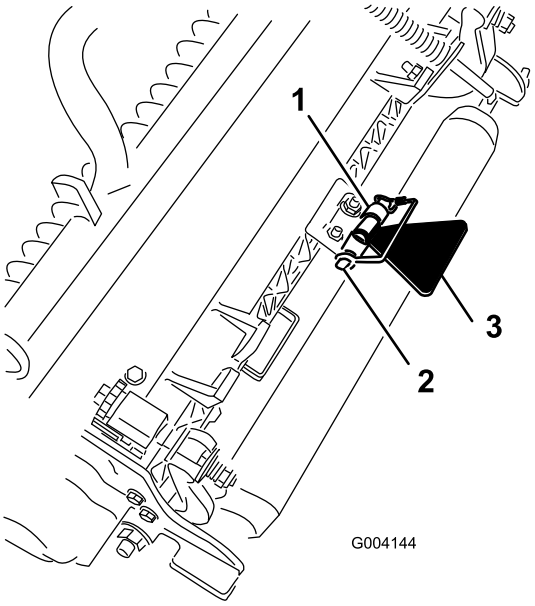

g004144

Figure 34

1. Chain bracket
2. Snapper pin
3. Cutting-unit kickstand

5

Installing the CE Hood Lock

Parts needed for this procedure:

1	Hood lock, seal, and jam nut
1	Washer

Procedure

1. Unlatch and raise the hood.
2. Remove the rubber grommet from the hole in the left side of the hood (Figure 35).

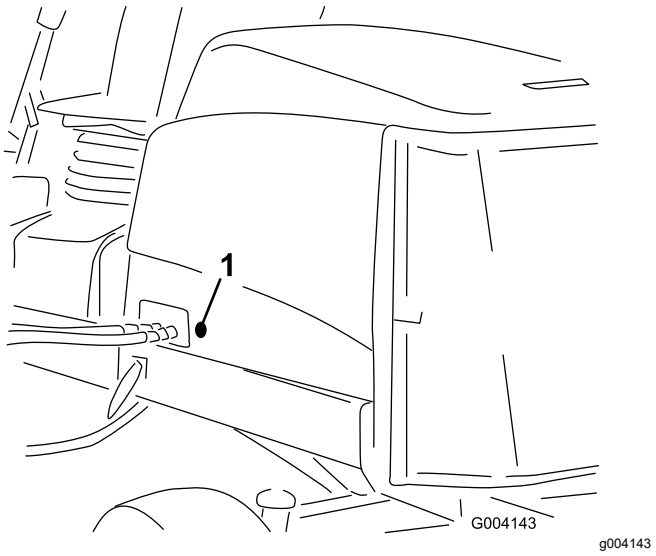

g004143

Figure 35

1. Rubber grommet

3. Ensure that the seal is assembled to the hood lock (Figure 36).

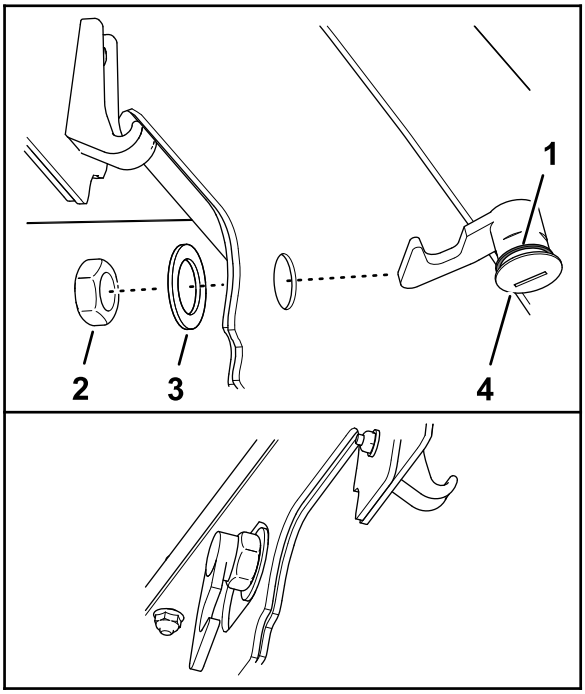

g375326

Figure 36

1. Hood latch
2. Nut
3. Seal
4. Washer

4. Remove the nut from the lock.
5. Outside the hood, insert the hook end of the latch through the hole in the hood.

   Note: The seal is aligned to the outside of the hood.
6. Inside the hood, Secure the lock to the hood with the washer and nut.
7. Close the hood, and use the enclosed hood-latch key to check that the hook of the lock engages the frame catch when locked.

6

Applying the CE Decals

Parts needed for this procedure:

1	CE decal
1	Production year decal
1	Warning decal

Applying the CE Decal

1. Use rubbing alcohol and a clean rag to clean the area of the hood next to the hood lock, and allow the hood to dry. (Figure 37).

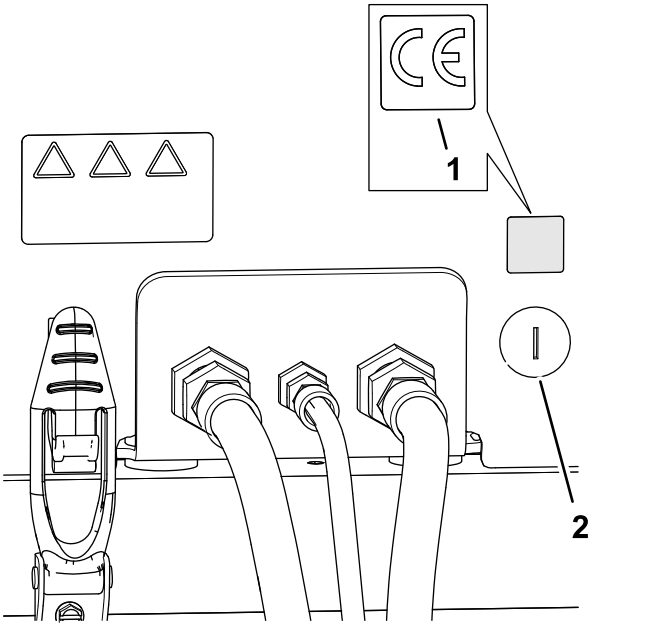

Figure 37

1. CE decal
2. Hood lock

2. Remove the backing from the CE decal.
3. Apply the decal to the hood.

Applying the Year of Production Decal

1. Use rubbing alcohol and a clean rag to clean the floor bracket area next to the serial plate, and allow the bracket to dry (Figure 38).

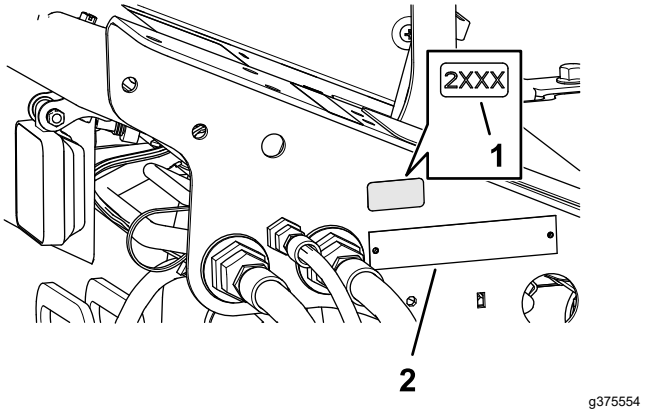

Figure 38

1. Year of production decal
2. Serial plate

2. Remove the backing from the year of production decal.
3. Apply the decal to the floor bracket.

Applying the CE Warning Decal

1. Use rubbing alcohol and a clean rag to clean the surface of warning decal 133-2930, and allow the decal to dry (Figure 39).

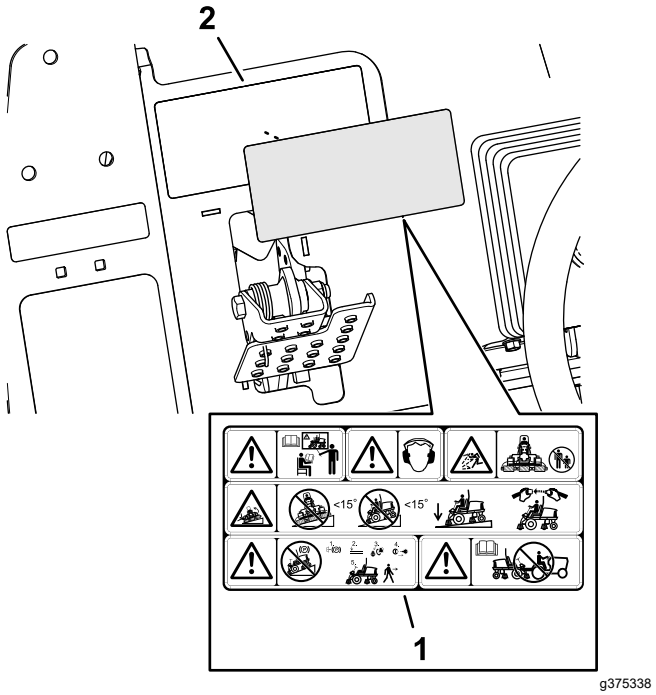

Figure 39

1. CE warning decal
2. Warning decal 133-2930

2. Remove the backing from the CE warning decal.
3. Apply the CE warning decal over decal 133-2930.

Product Overview

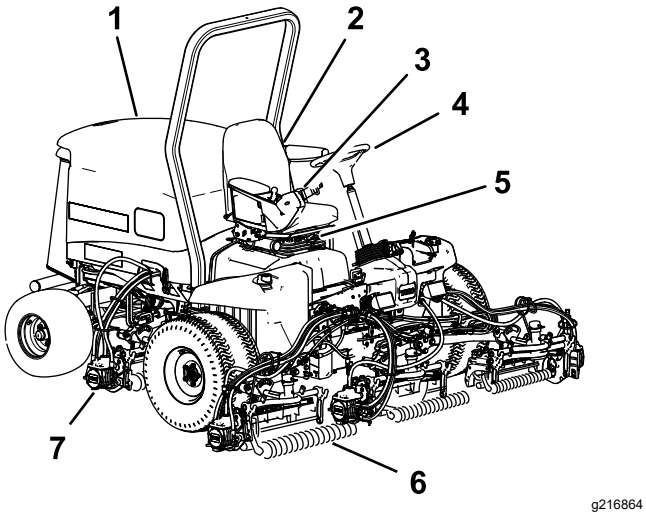

Figure 40

1. Engine hood
2. Seat
3. Control arm
4. Steering wheel
5. Seat adjustments
6. Front cutting units
7. Rear cutting units

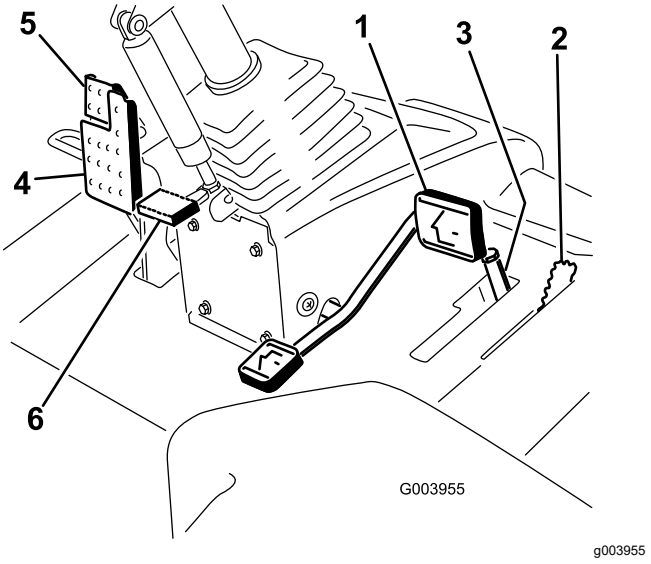

Figure 41

1. Traction pedal
2. Mow/transport lever
3. Mow-speed limiter and spacers
4. Brake pedal
5. Parking brake
6. Tilt steering pedal

Controls

Traction Pedal

The traction pedal (Figure 41) controls the forward and reverse operation. Press the top of the pedal to move the machine forward and the bottom to move the machine backward. Ground speed depends on how far you press the pedal. For no load, maximum ground speed, fully press the pedal while the throttle is in the FAST position.

To stop the machine, reduce foot pressure on the traction pedal and allow it to return to the center position.

Mow/Transport Lever

Use the mow/transport lever (Figure 41) to put the machine into MOW mode or TRANSPORT mode. Push the lever forward to select the MOW mode, and backward to select the TRANSPORT mode.

Note: The cutting units cannot be lowered when the mow/transport lever is in the TRANSPORT position.

Mow-Speed Limiter

When the mow-speed limiter (Figure 41) is flipped up/forward it limits the mow speed and allow the cutting units to be engaged. Each spacer adjusts the mowing speed by 0.8 km/h (0.5 mph). The more spacers there are on the top of the bolt, the slower the machine goes. Flip the mow speed limiter backward to allow maximum transport speed.

Brake Pedal

Press the brake pedal to stop the machine (Figure 41).

Parking Brake

To engage the parking brake, push down on the brake pedal and press the top forward to latch (Figure 41). To release the parking brake, press the brake pedal until the parking-brake latch retracts.

Tilt-Steering Pedal

To tilt the steering wheel towards you, press the foot pedal (Figure 41) down, pull the steering tower toward you to the most comfortable position, and release the pedal.

Engine-Speed Switch

The engine-speed switch has 2 modes to change the engine speed (Figure 42). By momentarily tapping the switch, you can change the engine speed in 100 rpm increments. If you hold the switch down, the engine automatically moves to High or Low idle, depending on which end of the switch you press.

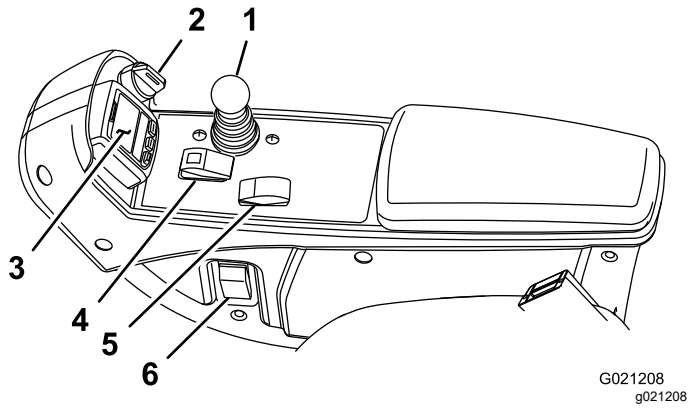

Figure 42

1. Lower mow/raise control lever
2. Key switch
3. InfoCenter
4. Enable/disable switch
5. Engine-speed switch
6. Headlight switch

Lower Mow/Raise Control Lever

This lever (Figure 42) raises and lowers the cutting units, and you use the lever to start and stop the cutting units when the mow/transport lever is in the MOW mode and the enable/disable switch is in the ENABLE position. You cannot lower the cutting units when the mow/transport lever is in the TRANSPORT position.

Key Switch

The key switch (Figure 42) has 3 positions: OFF, ON/PREHEAT, and START.

InfoCenter

The InfoCenter LCD display shows information about your machine, such as the operating status, various diagnostics, and other information about the machine (Figure 42).

Enable/Disable Switch

Use the enable/disable switch (Figure 42) in conjunction with the lower mow/raise control lever to operate the cutting units.

Headlight Switch

Pivot the switch downward to turn on the headlights (Figure 42).

Backlap Levers

Use the backlap levers in conjunction with the lower mow/raise control lever for backlapping the reels (Figure 43).

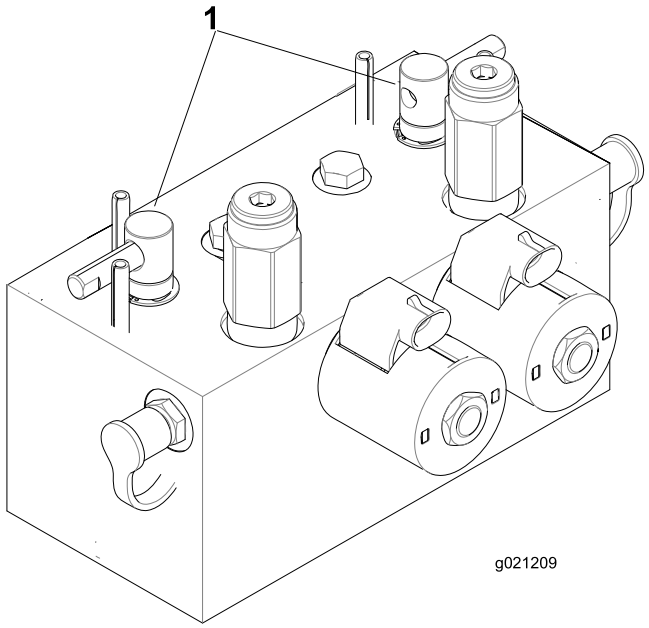

g021209

Figure 43

1. Backlap levers

Power Point

The power point is a 12 V power supply for electronic devices (Figure 44).

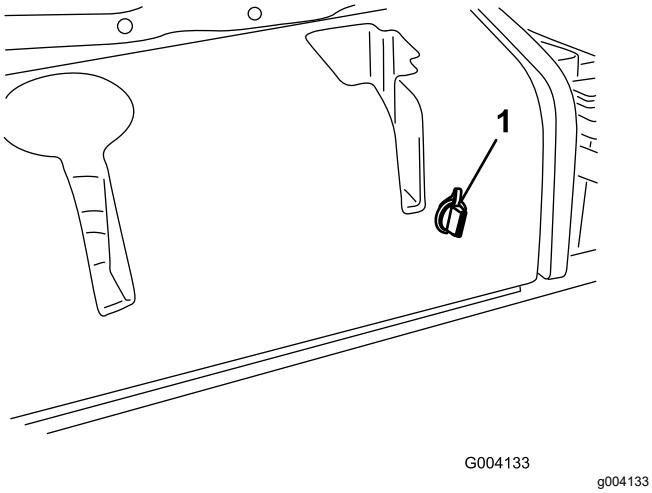

Figure 44

1. Power point

Seat Controls

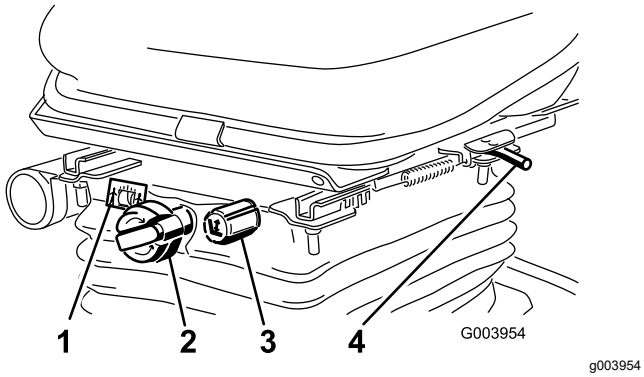

Figure 45

1. Weight gauge
2. Weight-adjusting knob
3. Height-adjusting knob
4. Adjusting lever

Seat-Position Lever

Pull the seat-position lever (Figure 45) to move the seat forward and rearward. Release the lever to lock the seat position.

Weight-Adjusting Knob

Rotate the weight-adjusting knob until your weight is displayed in the window of the weight gauge.

Height-Adjusting Knob

Rotate the height-adjusting knob to change the height of the seat.

Using the InfoCenter LCD Display

The InfoCenter LCD display shows information about your machine, such as the operating status, various diagnostics, and other information about the machine (Figure 46). There is a splash screen and main information screen of the InfoCenter. You can switch between the splash screen and main information screen, at any time, by pressing any of the InfoCenter buttons and then selecting the appropriate directional arrow.

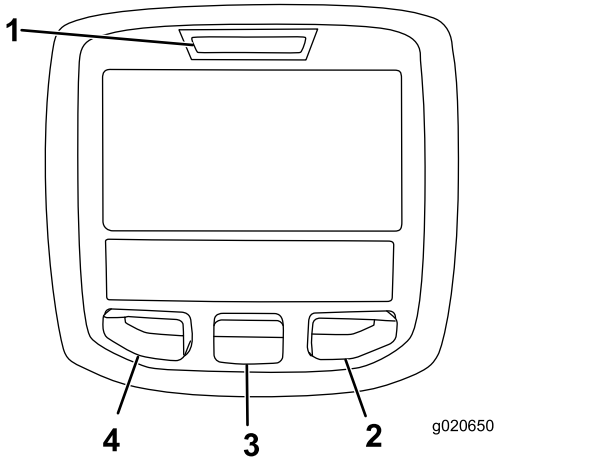

Figure 46

1. Indicator light
2. Right button
3. Middle button
4. Left button

- Left Button, Menu Access/Back Button— Press this button to access the InfoCenter menus. You can use it to back out of any menu you are currently using.
- Middle Button— Press this button to scroll down menus.
- Right Button— Press this button to open a menu where a right arrow indicates additional content.

Note: The purpose of each button may change depending on what is required at the time. Each button is labeled with an icon displaying its current function.

InfoCenter Icon Description

	Hours remaining until service
	Reset the service hours 🔒
SERVICE DUE	Indicates when scheduled service should be performed
n min	Engine rpm/status—indicates the engine speed (rpm)
	Hour meter
i	Info icon
	Fast
	Slow
	Fuel level
	Stationary regeneration is required.
	The glow plugs are active.
	Raise the cutting units.
	Lower the cutting units.
	Sit in the seat.
(P)	Parking brake is On.
H	The range is high (transport).
N	Neutral
L	The range is low (mow).
	Engine-coolant temperature (°C or °F)
	Temperature (hot)
	The PTO is engaged.
	Not allowed

	Start the engine.
	Shut off the engine.
	Engine
	Key switch
	The cutting units are lowering.
	The cutting units are raising.
PIN	PIN code
CAN	CAN bus
	InfoCenter
Bad	Bad or failed
	Bulb
OUT	Output of TEC controller or control wire in harness
	Switch
	Release the switch.
	Change to the indicated state.
Symbols are often combined to form sentences. Some examples are shown below	
N	Put the machine into Neutral.
	Engine start is denied.
STOP	Engine shutdown
	Engine coolant is too hot.
48.1g/l	DPF ash-accumulation notification—Refer to DPF Ash Accumulation (page 39) for details.
	Reset-standby regeneration request
	Parked or recovery regeneration request

	A parked or recovery regeneration is processing.
	High exhaust temperature
	NOx control diagnosis malfunction; drive the machine back to the shop and contact your authorized Toro distributor (software version U and later).
	The power take-off is disabled.
	Sit down or engage the parking brake.

Accessible only by entering PIN

Using the Menus

To access the InfoCenter menu system, press the menu access button while at the main screen. This brings you to the main menu. Refer to the following tables for a synopsis of the options available from the menus:

Main Menu	
Menu Item	**Description**
Faults	Contains a list of the recent machine faults. Refer to the *Service Manual* or contact your authorized Toro distributor for more information on the Faults menu and the information contained there.
Service	Contains information on the machine such as hours of use counters and other similar numbers.
Diagnostics	Displays the state of each machine switch, sensor and control output. You can use this to troubleshoot certain issues as it quickly tells you which machine controls are on and which are off.
Settings	Allows you to customize and modify configuration variables on the InfoCenter display
About	Lists the model number, serial number, and software version of your machine

Service	
Menu Item	**Description**
Hours	Lists the total number of hours that the machine, engine and PTO have been on, as well as the number of hours the machine has been transported and service due
Counts	Lists the number of starts, cutting unit/PTO cycles, and fan reversals the machine has experienced
DPF Regeneration	The diesel particulate filter regeneration option and DPF submenus
Inhibit Regen	Use to control reset regeneration
Parked Regen	Use to initiate a parked regeneration
Last Regen	Lists the number hours since the last reset, parked, or recovery regeneration
Recover Regen	Use to initiate a recovery regeneration
Counts	Lists numerous counts the machine has experienced

Diagnostics	
Menu Item	**Description**
Cutting Units	Indicates the inputs, qualifiers and outputs for raising and lowering the cutting units.
Hi/Low Range	Indicates the inputs, qualifiers and outputs for driving in transport mode.
PTO	Indicates the inputs, qualifiers and outputs for enabling the PTO circuit.
Engine Run	Indicates the inputs, qualifiers and outputs for starting the engine.
Backlap	Indicates the inputs, qualifiers and outputs for operating the backlap function.

Settings	
Menu Item	**Description**
Units	Controls the units used on the InfoCenter. The menu choices are English or metric.
Language	Controls the language used on the InfoCenter*.
LCD Backlight	Controls the brightness of the LCD display.
LCD Contrast	Controls the contrast of the LCD display.
Front Backlap Reel Speed	Controls the speed of the front reels in backlap mode.

Rear Backlap Reel Speed	Controls the speed of the rear reels in backlap mode.
Protected Menus	Allows a person authorized by your company with the PIN code to access protected menus.
Auto Idle 🔒	Controls the amount of time allowed before returning the engine to low idle when the machine is stationary.
Blade Count 🔒	Controls the number of blades on the reel for reel speed.
Mow Speed 🔒	Controls the ground speed for determining the reel speed.
Height of cut (HOC) 🔒	Controls the height of cut (HOC) for determining the reel speed.
F Reel RPM 🔒	Displays the calculated reel speed position for the front reels. The reels can also be manually adjusted.
R Reel RPM 🔒	Displays the calculated reel speed position for the rear reels. The reels can also be manually adjusted.

*Only operator-faced text is translated. Faults, Service, and Diagnostics screens are service-faced. Titles appear in the selected language, but menu items are in English.

🔒 Protected under Protected Menus—accessible only by entering PIN

About	
Menu Item	**Description**
Model	Lists the model number of the machine.
SN	Lists the serial number of the machine.
Machine-Controller Revision	Lists the software revision of the master controller.
InfoCenter Revision	Lists the software revision of the InfoCenter.
CAN Bus	Lists the machine communication bus status.

Protected Menus

There are operating configuration settings that are adjustable within the Settings Menu of the InfoCenter. To lock these settings, use the Protected Menu.

Note: At the time of delivery, the initial password code is programmed by your distributor.

Accessing Protected Menus

Note: The factory default PIN code for you machine is either 0000 or 1234.

If you changed the PIN code and forgot the code, contact your authorized Toro distributor for assistance.

1. From the MAIN MENU, use the center button to scroll down to the SETTINGS MENU and press the right button (Figure 47).

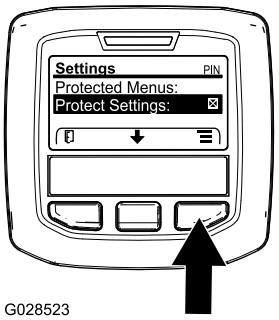

g028523

Figure 47

2. In the SETTINGS MENU, use the center button to scroll down to the PROTECTED MENU and press the right button (Figure 48A).

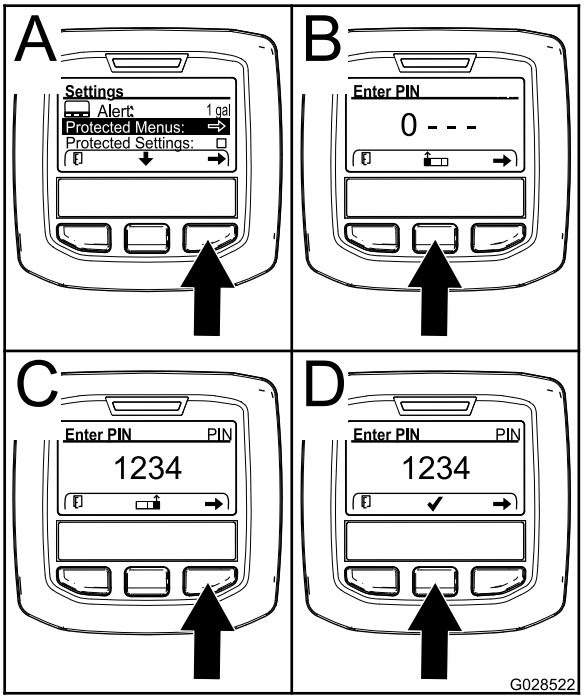

g028522

Figure 48

3. To enter the PIN code, press the center button until the correct first digit appears, then press the right button to move on to the next digit (Figure 48B and Figure 48C). Repeat this step until the last digit is entered and press the right button once more.

4. Press the middle button to enter the PIN code (Figure 48D).

   Wait until the red indicator light of the InfoCenter illuminates.

   Note: If the InfoCenter accepts the PIN code and the protected menu is unlocked, the word "PIN" displays in the upper right corner of the screen.

Note: Rotate the key switch to the OFF position and then to the ON position locks the protected menu.

You can view and change the settings in the Protected Menu. Once you access the Protected Menu, scroll down to Protect Settings option. Use the right button to change the setting. Setting the Protect Settings to OFF allows you to view and change the settings in the Protected Menu without entering the PIN code. Setting the Protect Settings to ON hides the protected options and requires you to enter the PIN code to change the setting in the Protected Menu. After you set the PIN code, rotate the key switch OFF and back to the ON position to enable and save this feature.

Setting the Auto Idle

1. In the Settings Menu, scroll down to Auto Idle.
2. Press the right button to change the auto idle time between OFF, 8S, 10S, 15S, 20S, and 30S.

Setting the Blade Count

1. In the Settings Menu, scroll down to Blade Count.
2. Press the right button to change the blade count between 5, 8, or 11 blade reels.

Setting the Mow Speed

1. In the Settings Menu, scroll down to Mow Speed.
2. Press the right button to select mow speed.
3. Use the center and right button to select the appropriate mow speed set on the mechanical mow-speed limiter on the traction pedal.
4. Press the left button to exit mow speed and save the setting.

Setting the Height of Cut (HOC)

1. In the Settings Menu, scroll down to HOC.
2. Press the right button to select HOC.
3. Use the center and right button to select the appropriate HOC setting. (If the exact setting is not displayed, select the nearest HOC setting from the list displayed).
4. Press the left button to exit HOC and save the setting.

Setting the Front and Rear Reel Speeds

Although the front and rear reel speeds are calculated by inputting the number of blades, mow speed and HOC into the InfoCenter, the setting can be manually changed to accommodate for different mowing conditions.

1. To change the Reel Speed Settings, scroll down to the F Reel RPM, R Reel RPM, or both.
2. Press the right button to change the reel speed value. As you change the speed setting, the display continues to show the calculated reel speed based on blade count, mow speed and HOC, which was previously entered, but the new value is also displayed.

Setting the Service Due Timer

This resets the service due hours after a scheduled maintenance procedure is performed.

1. In the Settings Menu, use the center button to scroll down to the PROTECTED MENU and press the right button.
2. Enter PIN; refer to Accessing Protected Menus on the *Operator's Manual* for your machine.
3. In the Service Menu, navigate to the HOURS MENU.
4. Scroll down to the service symbol .

   Note: If service is currently due, the first icon shows NOW.
5. Below the first icon is the service interval item (time interval, e.g. 250, 500, etc.)

   Note: Service interval is a protected menu item.
6. Highlight the service interval and press the right button.
7. When the new screen appears, confirm RESET SERVICE HOURS—ARE YOU SURE?
8. Select YES(center button) or NO (left button).
9. After you select YES the interval screen clears, and reverts back to the Service Hours selections.

Specifications

Note: Specifications and design are subject to change without notice.

Transport width	233 cm (92 inches)
Width of cut	254 cm (100 inches)
Length	282 cm (111 inches)
Height	160 cm (63 inches)
Weight (with fluids and 8-blade cutting units installed)	1420 kg (3,131 lb)
Engine	Yanmar 43 hp
Fuel-tank capacity	53 L (14 US gallons)
Transport speed	0 to 16 km/h (0 to 10 mph)
Mowing speed	0 to 13 km/h (0 to 8 mph)

Attachments/Accessories

A selection of Toro approved attachments and accessories is available for use with the machine to enhance and expand its capabilities. Contact your Authorized Service Dealer or authorized Toro distributor or go to www.Toro.com for a list of all approved attachments and accessories.

To ensure optimum performance and continued safety certification of the machine, use only genuine Toro replacement parts and accessories. Replacement parts and accessories made by other manufacturers could be dangerous, and such use could void the product warranty.

Operation

Note: Determine the left and right sides of the machine from the normal operating position.

Before Operation

Before Operation Safety

General Safety

- Never allow children or untrained people to operate or service the machine. Local regulations may restrict the age of the operator. The owner is responsible for training all operators and mechanics.
- Become familiar with the safe operation of the equipment, operator controls, and safety signs.
- Before you leave the operator's position, do the following:
  - Park the machine on a level surface.
  - Disengage and lower the cutting units.
  - Engage the parking brake.
  - Shut off the engine and remove the key.
  - Wait for all movement to stop.
  - Allow the machine to cool before adjusting, servicing, cleaning, or storing it.
- Know how to stop the machine and shut off the engine quickly.
- Do not operate the machine without all guards and other safety protective devices in place and functioning properly on the machine.
- Before mowing, always inspect the machine to ensure that the cutting units are in good working condition.
- Inspect the area where you will use the machine and remove all objects that the machine could throw.

Fuel Safety

- Use extreme care in handling fuel. It is flammable and its vapors are explosive.
- Extinguish all cigarettes, cigars, pipes, and other sources of ignition.
- Use only an approved fuel container.
- Do not remove the fuel cap or fill the fuel tank while the engine is running or hot.
- Do not add or drain fuel in an enclosed space.

- Do not store the machine or fuel container where there is an open flame, spark, or pilot light, such as on a water heater or other appliance.
- If you spill fuel, do not attempt to start the engine; avoid creating any source of ignition until the fuel vapors have dissipated.

Filling the Fuel Tank

Fuel Tank Capacity

53 L (14 US gallons)

Fuel Specification

Important: **Use only ultra-low sulphur diesel fuel. Fuel with higher rates of sulfur degrades the diesel oxidation catalyst (DOC), which causes operational problems and shortens the service life of engine components.**

Failure to observe the following cautions may damage the engine.

- Never use kerosene or gasoline instead of diesel fuel.
- Never mix kerosene or used engine oil with the diesel fuel.
- Never keep fuel in containers with zinc plating on the inside.
- Do not use fuel additives.

Petroleum Diesel

Cetane rating: 45 or higher

Sulfur content: Ultra-low sulfur (<15 ppm)

Fuel Table

Diesel fuel specification	Location
ASTM D975 No. 1-D S15 No. 2-D S15	USA
EN 590	European Union
ISO 8217 DMX	International
JIS K2204 Grade No. 2	Japan
KSM-2610	Korea

- Use only clean, fresh diesel fuel or biodiesel fuels.
- Purchase fuel in quantities that can be used within 180 days to ensure fuel freshness.

Use summer-grade diesel fuel (No. 2-D) at temperatures above -7°C (20°F) and winter-grade fuel (No. 1-D or No. 1-D/2-D blend) below that temperature.

Note: Use of winter-grade fuel at lower temperatures provides lower flash point and cold flow characteristics which eases starting and reduces fuel filter plugging.

Using summer-grade fuel above -7°C (20°F) contributes toward longer fuel pump life and increased power compared to winter-grade fuel.

Biodiesel

This machine can also use a biodiesel blended fuel of up to B20 (20% biodiesel, 80% petroleum diesel).

Sulfur content: Ultra-low sulfur (<15 ppm)

Biodiesel fuel specification: ASTM D6751 or EN14214

Blended fuel specification: ASTM D975, EN590, or JIS K2204

Important: **The petroleum diesel portion must be ultra-low sulfur.**

Observe the following precautions:

- Biodiesel blends may damage painted surfaces.
- Use B5 (biodiesel content of 5%) or lesser blends in cold weather.
- Monitor seals, hoses, gaskets in contact with fuel as they may be degraded over time.
- Fuel filter plugging may be expected for a time after converting to biodiesel blends.
- Contact your authorized Toro distributor for more information on biodiesel.

Adding Fuel

1. Park the machine on a level surface, lower the cutting units, engage the parking brake, shut off the engine, and remove the key.
2. Using a clean rag, clean area around fuel-tank cap.
3. Remove the cap from the fuel tank (Figure 49).

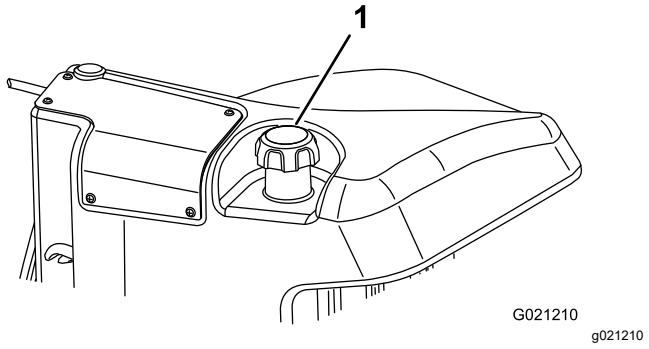

Figure 49

1. Fuel-tank cap

4. Fill the tank until the level is 6 to 13 mm (1/4 to 1/2 inch) below the bottom of the filler neck.
5. Install the fuel-tank cap tightly after filling the tank.

   Note: If possible, fill the fuel tank after each use. This minimizes possible buildup of condensation inside the fuel tank.

Performing Daily Maintenance

Service Interval: Before each use or daily

Before starting the machine each day, perform the Each Use/Daily procedures listed in Maintenance (page 52).

Checking the Interlock Switches

Service Interval: Before each use or daily

⚠ CAUTION

If safety interlock switches are disconnected or damaged, the machine could operate unexpectedly, causing personal injury.

- **Do not tamper with the interlock switches.**
- **Check the operation of the interlock switches daily and replace any damaged switches before operating the machine.**

Important: **If your machine fails any of the interlock switch checks, contact your authorized Toro distributor.**

Preparing the Machine

1. Drive the machine slowly to an open area.
2. Lower the cutting units, shut off the engine, and engage the parking brake.

Checking the Traction Pedal Start-Interlock

1. Sit in the operator's seat.
2. Engage the parking brake.
3. Press the PTO switch to the DISENGAGE position.
4. Press the traction pedal.
5. Rotate the key to the START position.

   Note: The starter should not crank the engine with the traction pedal pressed.

Checking the PTO-Start Interlock

1. Sit in the operator's seat.
2. Press the PTO switch to the ENGAGE position.
3. Start the engine.

   Note: The engine should not start with the PTO switch in the ENGAGE position.

Checking the PTO-Run Interlock

1. Sit in the operator's seat.
2. Press the PTO switch to the DISENGAGE position.
3. Start the engine.
4. Rise from the seat.
5. Press the PTO switch to the ENGAGE position.

   Note: The PTO should not run when you are out of the operator's seat.

Checking the Parking Brake and Traction Pedal Run-Interlock

1. Sit in the operator's seat.
2. Engage the parking brake.
3. Press the PTO switch to the DISENGAGE position.
4. Keep your foot off the traction pedal.
5. Start the engine.
6. Press the traction pedal.

   Note: The engine should shut off when the parking brake is engaged and the traction pedal is pressed.

During Operation

During Operation Safety

General Safety

- The owner/operator can prevent and is responsible for accidents that may cause personal injury or property damage.
- Wear appropriate clothing, including eye protection; long trousers; substantial, slip-resistant footwear; and hearing protection. Tie back long hair and do not wear loose clothing or loose jewelry.
- Do not operate the machine while ill, tired, or under the influence of alcohol or drugs.
- Use your full attention while operating the machine. Do not engage in any activity that

causes distractions; otherwise, injury or property damage may occur.

- Before you start the engine, ensure that all drives are in neutral, the parking brake is engaged, and you are in the operating position.
- Do not carry passengers on the machine and keep bystanders and children out of the operating area.
- Operate the machine only in good visibility to avoid holes or hidden hazards.
- Avoid mowing on wet grass. Reduced traction could cause the machine to slide.
- Keep your hands and feet away from the cutting units.
- Look behind and down before backing up to be sure of a clear path.
- Use care when approaching blind corners, shrubs, trees, or other objects that may obscure your vision.
- Stop the cutting units whenever you are not mowing.
- Slow down and use caution when making turns and crossing roads and sidewalks with the machine. Always yield the right-of-way.
- Operate the engine only in well-ventilated areas. Exhaust gases contain carbon monoxide, which is lethal if inhaled.
- Do not leave a running machine unattended.
- Before you leave the operator's position, do the following:
  - Park the machine on a level surface.
  - Disengage and lower the cutting units.
  - Engage the parking brake.
  - Shut off the engine and remove the key.
  - Wait for all movement to stop.
  - Allow the machine to cool before adjusting, servicing, cleaning, or storing it.
- Operate the machine only in good visibility and appropriate weather conditions. Do not operate the machine when there is the risk of lightning.

Rollover Protection System (ROPS) Safety

- Do not remove any of the ROPS components from the machine.
- Ensure that the seat belt is attached and that you can release it quickly in an emergency.
- Always wear your seat belt.
- Check carefully for overhead obstructions and do not contact them.
- Keep the ROPS in safe operating condition by thoroughly inspecting it periodically for damage and keeping all the mounting fasteners tight.
- Replace all damaged ROPS components. Do not repair or alter them.

Slope Safety

- Slopes are a major factor related to loss of control and rollover accidents, which can result in severe injury or death. You are responsible for safe slope operation. Operating the machine on any slope requires extra caution.
- Evaluate the site conditions to determine if the slope is safe for machine operation, including surveying the site. Always use common sense and good judgment when performing this survey.
- Review the slope instructions, listed below, for operating the machine on slopes. Before you operate the machine, review the site conditions to determine whether you can operate the machine in the conditions on that day and at that site. Changes in the terrain can result in a change in slope operation for the machine.
  - Avoid starting, stopping, or turning the machine on slopes. Avoid making sudden changes in speed or direction. Make turns slowly and gradually.
  - Do not operate a machine under any conditions where traction, steering, or stability is in question.
  - Remove or mark obstructions such as ditches, holes, ruts, bumps, rocks, or other hidden hazards. Tall grass can hide obstructions. Uneven terrain could overturn the machine.
  - Be aware that operating the machine on wet grass, across slopes, or downhill may cause the machine to lose traction.
  - Use extreme caution when operating the machine near drop-offs, ditches, embankments, water hazards, or other hazards. The machine could suddenly roll over if a wheel goes over the edge or the edge caves in. Establish a safety area between the machine and any hazard.
  - Identify hazards at the base of the slope. If there are hazards, mow the slope with a pedestrian-controlled machine.
  - If possible, keep the cutting units lowered to the ground while operating on slopes. Raising the cutting units while operating on slopes can cause the machine to become unstable.

Starting the Engine

Important: **The fuel system automatically bleeds itself when any of the following situations occur:**

- You are starting a new machine for the first time.
- The engine has ceased running due to lack of fuel.
- Maintenance has been performed upon the fuel system components.

1. Sit on the seat, keep your foot off the traction pedal so that it is in NEUTRAL, engage the parking brake, set the engine-speed switch to the MIDDLE position, and ensure that the Enable/Disable switch is in the DISABLE position.
2. Remove your foot from the traction pedal and make sure that the pedal is in the NEUTRAL position.
3. Turn the key to the RUN position.
4. When the glow indicator dims, turn the key to the START position. Release the key immediately when the engine starts and allow it to return to the RUN position. Allow the engine to warm up (without load), then move the throttle control to the desired position.

Hydraulic Filter-Restriction Indicator

The hydraulic system is equipped with a hydraulic filter-restriction indicator (Figure 50). With the engine running at operating temperature, view the indicator; it should be in the green zone. When the indicator is in the red zone, change the hydraulic filters.

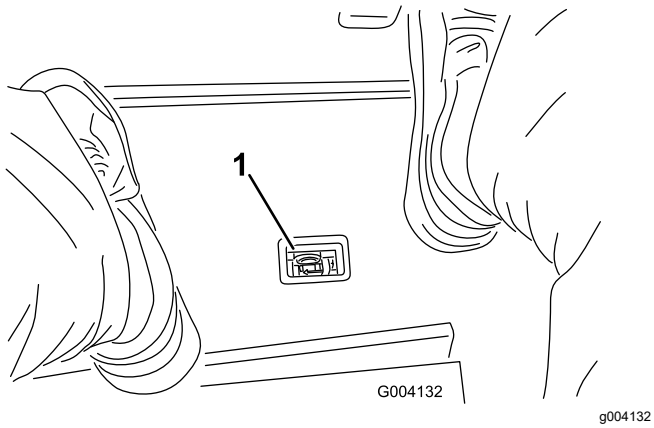

g004132

Figure 50

1. Hydraulic-filter-restriction indicator

Shutting Off the Engine

1. Move all controls to NEUTRAL, engage the parking brake, move the engine-speed switch to the low idle position and allow the engine to reach low idle speed.
2. Turn the key to the OFF position and remove it from the switch.

Cutting Grass with the Machine

Note: Cutting grass at a rate that loads the engine promotes DPF regeneration.

1. Move the machine to the job site and align the machine outside the cutting area for the first cutting pass.
2. Ensure that the PTO switch is set to the DISABLE position.
3. Move the lever for the mow-speed limiter forward.
4. Press the throttle-speed switch to set the engine speed to HIGH IDLE.
5. Use the joystick to lower the cutting units to the ground.
6. Press the PTO switch to prepare cutting units for operation.
7. Use the joystick to raise the cutting units off the ground.
8. Begin moving the machine toward the cutting area and lower the cutting units.

   Note: Cutting grass at a rate that loads the engine promotes DPF regeneration.
9. When you complete the mowing pass, use the joystick to lift the cutting units.
10. Perform a tear-shaped turn to quickly line up for your next pass.

Adjusting the Turf-Compensation Spring

The turf-compensation spring (Figure 51) transfers the weight from the front roller to the rear roller. This helps to reduce a wave pattern in the turf, also known as marcelling or bobbing.

Important: **Make spring adjustments with the cutting unit mounted to the traction unit, pointing straight ahead, and lowered to the shop floor.**

1. Make sure that the hairpin is installed in the rear hole in the spring rod (Figure 51).

Note: When servicing the cutting unit, move the hairpin to the spring-rod hole next to the turf-compensation spring.

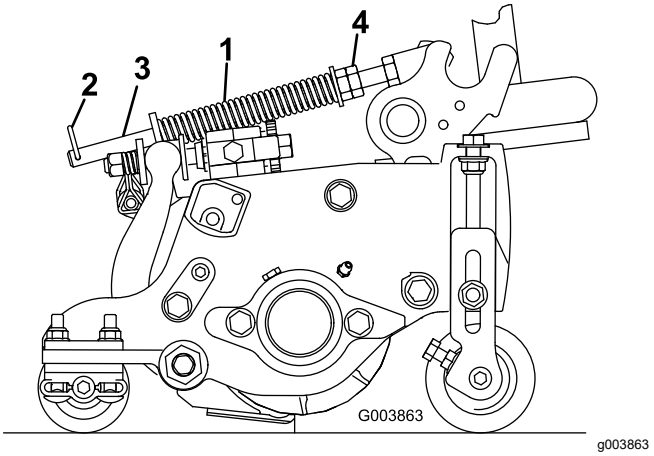

g003863

Figure 51

1. Turf-compensation spring
2. Hairpin
3. Spring rod
4. Hex nuts

2. Tighten the hex nuts on the front end of the spring rod until the compressed length of the spring is 15.9 cm (6.25 inches); refer to Figure 51.

   Note: When operating on rough terrain decrease the spring length by 13 mm (1/2 inch). Ground following will be slightly decreased.

   Note: The turf compensation setting will need to be reset if the HOC setting or the Aggressiveness of Cut setting is changed.

Adjusting the Lift-Arm Counterbalance

Rear Cutting Units

⚠ CAUTION

The springs are under tension and could cause personal injury.

Use caution when adjusting the springs.

You can adjust the amount of counterbalance force applied to the rear cutting-units to help compensate for different turf conditions, and to maintain a uniform height of cut in rough conditions or in areas of thatch buildup.

You adjust counterbalance force of each torsion spring to 1 of 4 settings. Each increment increases or decreases the counterbalance force on the cutting unit by 2.3 kg (5 lb). You can position the springs at the back side of the first spring actuator to remove all counterbalance (fourth position).

Note: To remove all counterbalance force, position the long leg of the torsion spring above the shouldered stud.

1. Park the machine on a level surface, lower the cutting units, shut off the engine, engage the parking brake, and remove the key.
2. Insert the long end of the counterbalance spring into a tube or similar object, and pivot the spring around the shouldered stud to the desired position (Figure 52).

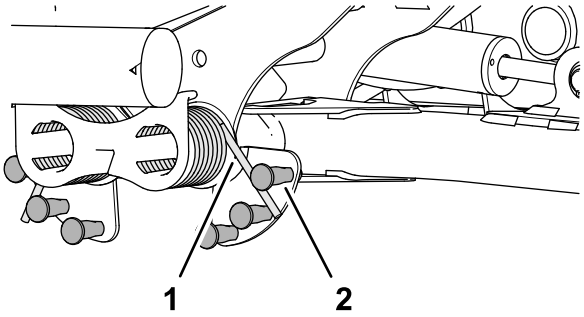

g375585

Figure 52

1. Spring
2. Shouldered stud

3. Repeat steps 1 and 2 at the other counterbalance spring.

Adjusting the Lift-Arm Turnaround Position

1. Park the machine on a level surface, lower the cutting units, shut off the engine, engage the parking brake, and remove the key.
2. The lift-arm switch is located underneath the hydraulic tank and inboard of the cutting unit #5 lift arm (Figure 31).

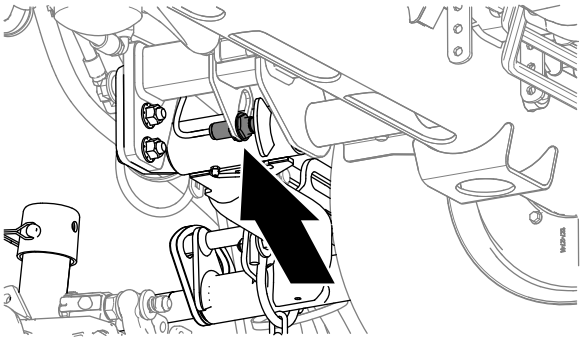

g375697

Figure 53

3. Loosen the jam nut that secures lift-arm switch to the switch plate (Figure 54).

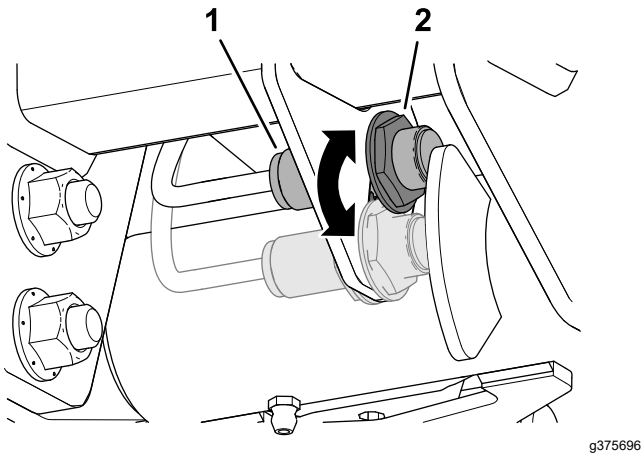

Figure 54

1. Switch
2. Lift-arm sensing device

4. Adjust the lift-arm switch as follows:
   - To increase the lift-arm turnaround height, move the switch down.
   - To decrease the lift-arm turnaround height, move the switch up.
5. Tighten the jam nut.

Setting the Reel Speed

To achieve a consistent, high quality of cut and a uniform after-cut appearance, adjust the reel speed as follows:

1. In the InfoCenter, under the settings menu, enter the blade count, mow speed, and HOC to calculate the proper reel speed.
2. If further adjustments are required, in the settings menu, scroll down to the F Reel RPM, R Reel RPM, or both.
3. Press the right button to change the reel-speed value.

   Note: As you change the speed setting, the display continues to show the calculated reel speed based on blade count, mow speed and HOC, but the new value is also be displayed.

   Note: You may need to increase or decrease the reel speed to compensate for varying turf conditions.

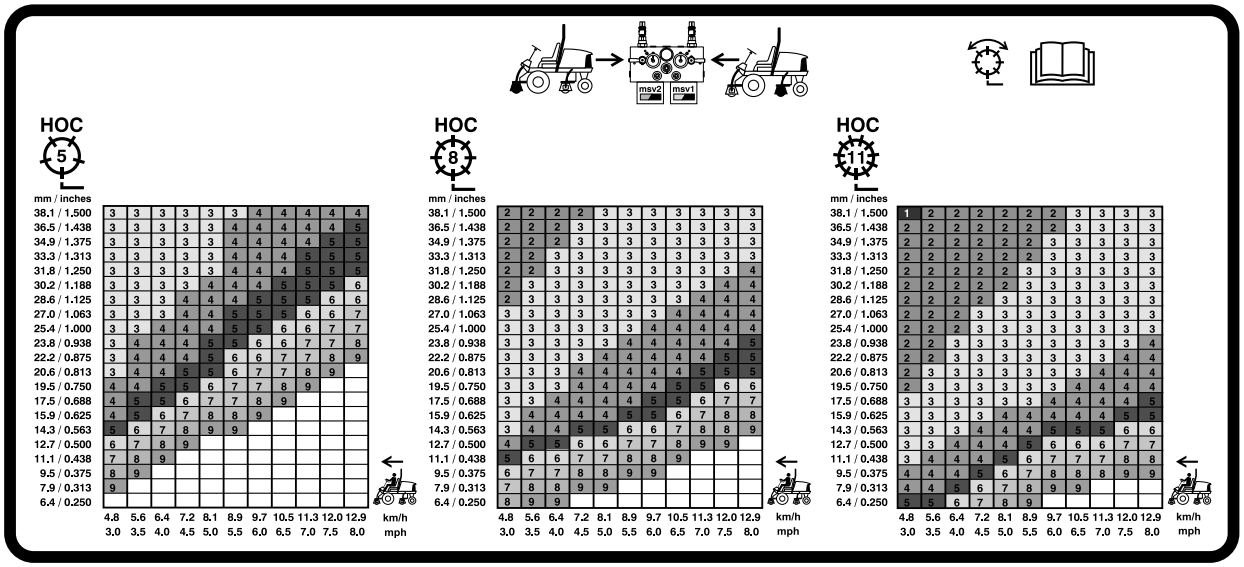

G031995

g031995

Figure 55

5 inch (127 mm) Reel Speed Chart

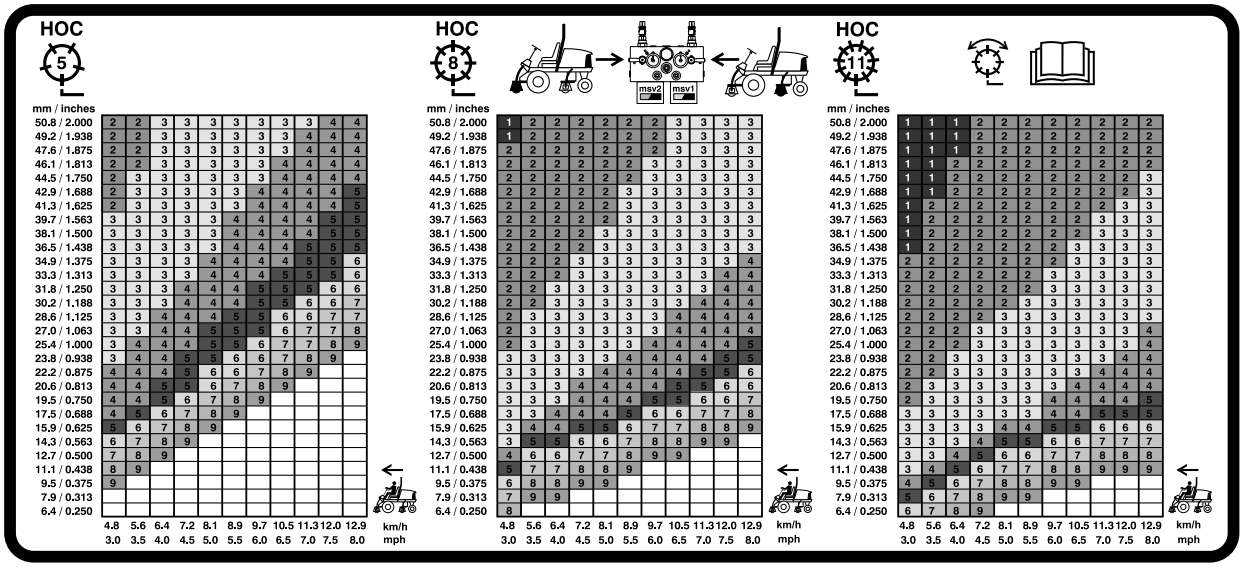

G031996

g031996

Figure 56

7 inch (177.8 mm) Reel Speed Chart

Understanding the Diagnostic Light

The machine is equipped with a diagnostic light, which indicates if the machine detects a malfunction. The diagnostic light is located on the InfoCenter, above the display screen (Figure 57). When the machine is functioning properly and the key switch is moved to the ON/RUN position, the diagnostic light turns on briefly to indicate that the light is working properly. When a machine advisory message appears, the light illuminates when the message is present. When a fault message appears, the light blinks until the fault is resolved.

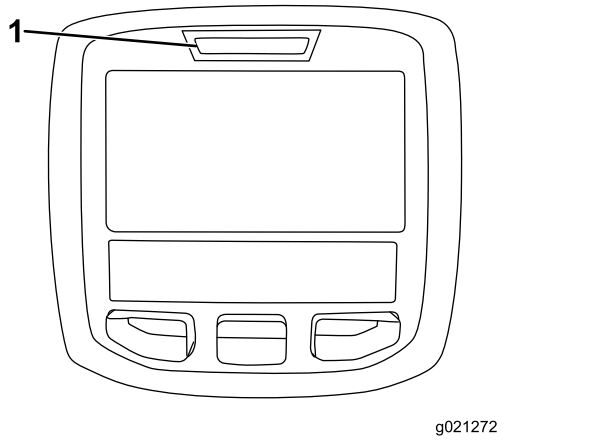

g021272

Figure 57

1. Diagnostic light

Diesel Particulate Filter Regeneration

The diesel particulate filter (DPF) is part of the exhaust system. The diesel-oxidation catalyst of the DPF reduces harmful gasses and the soot filter removes soot from the engine exhaust.

The DPF regeneration process uses heat from the engine exhaust to incinerate the soot accumulated on the soot filter, converting the soot to ash, and clears the channels of the soot filter so that filtered engine exhaust flows out the DPF.

The engine computer monitors the accumulation of soot by measuring the back pressure in the DPF. If the back pressure is too high, soot is not incinerating in the soot filter through normal engine operation. To keep the DPF clear of soot, remember the following:

- Passive regeneration occurs continuously while the engine is running—run the engine at full engine speed when possible to promote DPF regeneration.
- If the back pressure in the DPF is too high or a reset regeneration has not occurred for 100 hours, the engine computer signals you through the InfoCenter when reset regeneration is running.
- Allow the reset regeneration process to complete before shutting off the engine.

Operate and maintain your machine with the function of the DPF in mind. Engine load at high idle (full throttle) engine speed generally produces adequate exhaust temperature for DPF regeneration.

Important: **Minimize the amount of time that you idle the engine or operate the engine at low-engine speed to help reduce the accumulation of soot in the soot filter.**

DPF Soot Accumulation

- Over time, the diesel particulate filter accumulates soot in the soot filter. The computer for the engine monitors the soot level in the DPF.
- When enough soot accumulates, the computer informs you that it is time to regenerate the DPF.
- DPF regeneration is a process that heats the DPF to convert the soot to ash.
- In addition to the warning messages, the computer reduces the power produced by the engine at different soot-accumulation levels.

Engine Warning Messages—Soot Accumulation

Indication Level	Fault Code	Engine Power Rating	Recommended Action
Level 1: Engine Warning	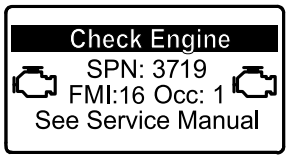 g213866 **Figure 58** Check Engine SPN 3719, FMI 16	The computer de-rates the engine power to 85%.	Perform a parked regeneration as soon as possible; refer to Parked or Recovery Regeneration (page 45).
Level 2: Engine Warning	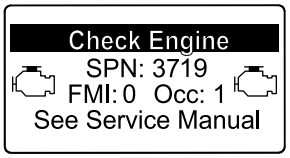 g213867 **Figure 59** Check Engine SPN 3719, FMI 0	The computer de-rates the engine power to 50%.	Perform a recovery regeneration as soon as possible; refer to Parked or Recovery Regeneration (page 45).

DPF Ash Accumulation

- The lighter ash is discharged through the exhaust system; the heavier ash collects in the soot filter.
- Ash is a residue of the regeneration process. Over time, the diesel particulate filter accumulates ash that does not discharge with the engine exhaust.
- The computer for the engine calculates the amount of ash accumulated in the DPF.
- When enough ash accumulates, the engine computer sends information to the InfoCenter in the form of an engine fault to indicate the accumulation of ash in the DPF.
- The fault messages indicate that it is time to service the DPF.
- In addition to the warnings, the computer reduces the power produced by the engine at different ash-accumulation levels.

InfoCenter Advisory and Engine Warning Messages—Ash Accumulation

Indication Level	Fault Code	Engine Speed Reduction	Engine Power Rating	Recommended Action
Level 1: Engine Warning	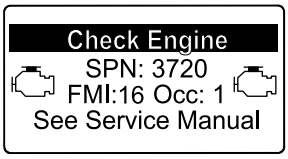 g213863 **Figure 60** Check Engine SPN 3720, FMI 16	None	The computer de-rates the engine power to 85%.	Service the DPF; refer to Servicing the Diesel-Oxidation Catalyst (DOC) and the Soot Filter (page 62)
Level 2: Engine Warning	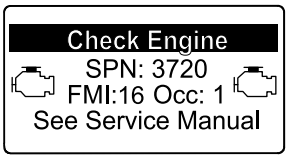 g213863 **Figure 61** Check Engine SPN 3720, FMI 16	None	The computer de-rates the engine power to 50%.	Service the DPF; refer to Servicing the Diesel-Oxidation Catalyst (DOC) and the Soot Filter (page 62)
Level 3: Engine Warning	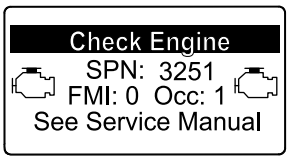 g214715 **Figure 62** Check Engine SPN 3251, FMI 0	Engine speed at maximum torque + 200 rpm	The computer de-rates the engine power to 50%.	Service the DPF; refer to Servicing the Diesel-Oxidation Catalyst (DOC) and the Soot Filter (page 62)

Types of Diesel Particulate Filter Regeneration

Types of diesel particulate filter regeneration that are performed while the machine is operating:

Type of Regeneration	Conditions that cause DPF regeneration	DPF description of operation
Passive	Occurs during normal operation of the machine at high-engine speed or high-engine load	• The InfoCenter does not display an icon indicating passive regeneration. • During passive regeneration, the DPF processes high-heat exhaust gasses, oxidizing harmful emissions, and burning soot to ash. Refer to Passive DPF Regeneration (page 42).
Assist	Occurs because of low-engine speed, low-engine load, or after the computer detects the DPF is becoming obstructed with soot	• The InfoCenter does not display an icon indicating assist regeneration. • During assist regeneration, the engine computer adjusts the engine settings to raise the exhaust temperature. Refer to Assist DPF Regeneration (page 43).
Reset	Occurs every 100 hours Also occurs after assist regeneration only if the computer detects that assist regeneration did not sufficiently reduce the soot level	• When the high exhaust-temperature icon  is displayed in the InfoCenter, a regeneration is in progress. • During reset regeneration, the engine computer adjusts the engine settings to raise the exhaust temperature. Refer to Reset Regeneration (page 43).

Types of diesel particulate filter regeneration that require you to park the machine:

Type of Regeneration	Conditions that cause DPF regeneration	DPF description of operation
Parked	Occurs because the computer detects back pressure in the DPF due to soot buildup Also occurs because the operator initiates a parked regeneration May occur because you set the InfoCenter to inhibit reset regeneration and continued operating the machine, adding more soot when the DPF already needs a reset regeneration May result from using the incorrect fuel or engine oil	• When the reset-standby/parked or recovery regeneration icon  or ADVISORY #188 displays in the InfoCenter, a regeneration is requested. • Perform the parked regeneration as soon as possible to avoid needing a recovery regeneration. • A parked regeneration requires 30 to 60 minutes to complete. • You must have at least a 1/4 tank of fuel in the tank. • You must park the machine to perform a parked regeneration. Refer to Parked or Recovery Regeneration (page 45).

Types of diesel particulate filter regeneration that require you to park the machine: (cont'd.)

Type of Regeneration	Conditions that cause DPF regeneration	DPF description of operation
Recovery	Occurs because the operator ignored requests for a parked regeneration and continued operating the machine, adding more soot to the DPF	• When the reset-standby/parked or recovery regeneration icon 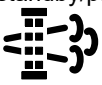 or ADVISORY #190 displays in the InfoCenter, a recovery regeneration is requested. • A recovery regeneration requires up to 3 hours to complete. • You must have at least a 1/2 tank of fuel in the machine. • You must park the machine to perform a recovery regeneration. Refer to Parked or Recovery Regeneration (page 45).

Accessing the DPF Regeneration Menus

Accessing the DPF Regeneration Menus

1. Access the Service menu, press the center button to scroll down to the DPF REGENERATION option (Figure 63).

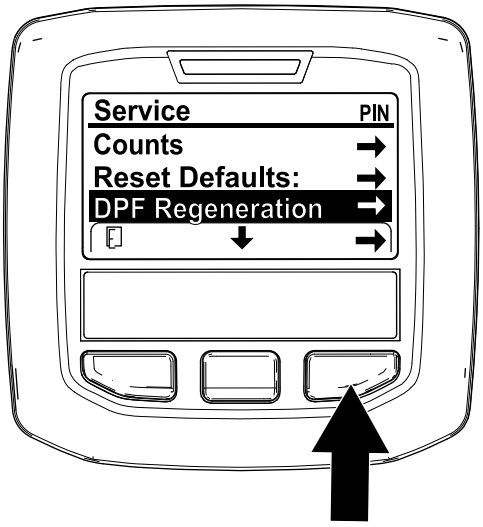

g227667

Figure 63

2. Press the right button to select the DPF Regeneration entry (Figure 63).

Time Since Last Regeneration

Access the DPF Regeneration menu, press the center button to scroll down to the LAST REGEN field (Figure 64).

Use the LAST REGEN field to determine how many hours you have run the engine since the last reset, parked, or recovery regeneration.

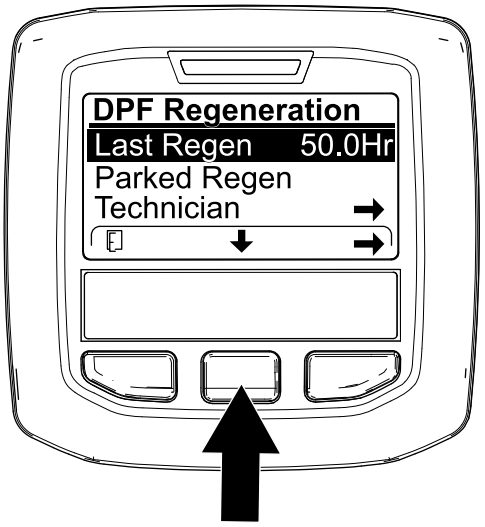

g224693

Figure 64

Technician Menu

Important: **For operating convenience, you may decide to perform a parked regeneration before the soot load reaches 100%, provided the engine has run more than 50 hours since the last successful reset, parked, or recovery regeneration.**

Use the technician menu to view the current state of engine regeneration control and view the reported soot level.

Access the DPF Regeneration menu, press the center button to scroll down to the TECHNICIAN option, and

press the right button to select the Technician entry (Figure 65).

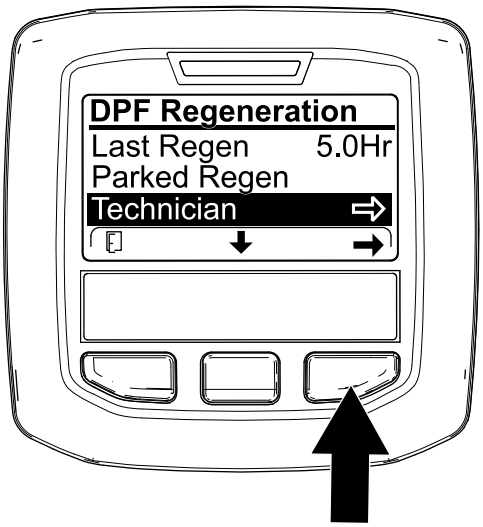

g227348

Figure 65

- Use the DPF operation table to understand the current state of DPF operation (Figure 66).

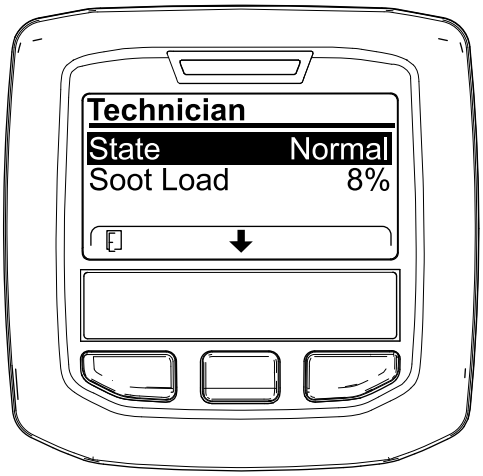

g227360

Figure 66

.

DPF Operation Table

State	Description	
Normal	The DPF is in normal-operating mode—passive regeneration.	
Assist Regen	The engine computer is performing an assist regeneration.	
Reset Stby	The engine computer is trying to run a reset regeneration, but 1 of the following conditions prevents regeneration:	The regen inhibit setting is set to ON.
		The exhaust temperature is too low for regeneration.

DPF Operation Table (cont'd.)

State	Description
Reset Regen	The engine computer is running a reset regeneration.
Parked Stby	The engine computer is requesting that you run a parked regeneration.
Parked Regen	You initiated a parked regeneration request and the engine computer is processing the regeneration.
Recov. Stby	The engine computer is requesting that you run a recovery regeneration.
Recov. Regen	You initiated a recovery regeneration request and the engine computer is processing the regeneration.

- View the soot load which is measured as the percentage of soot in the DPF(Figure 67); refer to the soot-load table.

  Note: The soot load value varies as the machine is operated and DPF regeneration occurs.

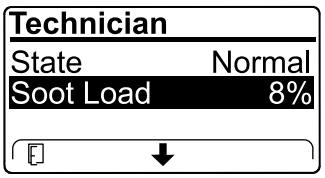

g227359

Figure 67

Soot-Load Table

Important Soot Load Values	Regeneration State
0% to 5%	Minimum soot load range
78%	The engine computer performs an assist regeneration.
100%	The engine computer automatically requests a parked regeneration.
122%	The engine computer automatically requests a recovery regeneration.

Passive DPF Regeneration

- Passive regeneration occurs as part of normal engine operation.
- While operating the machine, run the engine at full-engine speed and high load when possible to promote DPF regeneration.

Assist DPF Regeneration

- The engine computer adjusts engine settings to raise the exhaust temperature.
- While operating the machine, run the engine at full engine speed and high load when possible to promote DPF regeneration.

Reset Regeneration

⚠ CAUTION

The exhaust temperature is hot (approximately 600°C (1,112°F) during DPF regeneration. Hot exhaust gas can harm you or other people.

- **Never operate the engine in an enclosed area.**
- **Make sure that there are no flammable materials around the exhaust system.**
- **Never touch a hot exhaust system component.**
- **Never stand near or around the exhaust pipe of the machine.**

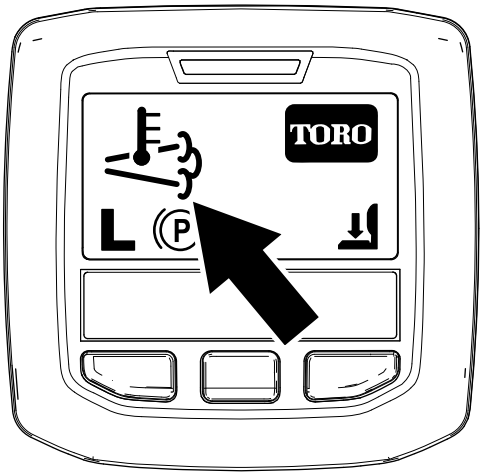

g224417

Figure 68

- The high exhaust-temperature icon displays in the InfoCenter (Figure 68).
- The engine computer adjusts engine settings to raise the exhaust temperature.

  Important: **The high exhaust-temperature icon indicates that the exhaust temperature discharged from of your machine may be hotter than during regular operation.**
- While operating the machine, run the engine at full engine speed and high load when possible to promote DPF regeneration.
- The icon displays in the InfoCenter while the reset regeneration is processing.
- Whenever possible, do not shut off the engine or reduce engine speed while the reset regeneration is processing.

  Important: **Whenever possible, allow the machine to complete the reset regeneration process before shutting off the engine.**

Periodic Reset Regeneration

If the engine has not completed a successful Reset, Parked, or Recovery regeneration in the previous 100 hours of engine operation, the engine computer will attempt to perform a reset regeneration.

Setting the Inhibit Regen

Reset Regeneration Only

Note: If you set the InfoCenter to inhibit regeneration, the InfoCenter displays ADVISORY #185 (Figure 69) every 15 minutes while the engine requests a reset regeneration.

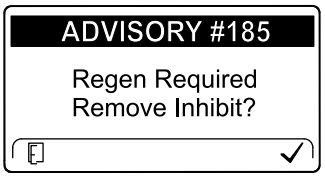

g224692

Figure 69

A reset regeneration produces the elevated engine exhaust. If you are operating the machine around trees, brush, tall grass, or other temperature-sensitive plants or materials, you can use the Inhibit Regen setting to prevent the engine computer from performing a reset regeneration.

Important: **When you shut off the engine and start it again, the inhibit regen setting defaults to OFF.**

1. Access the DPF Regeneration menu, press the center button to scroll down to the INHIBIT REGEN option, and press the right button to select the Inhibit Regen entry (Figure 70).

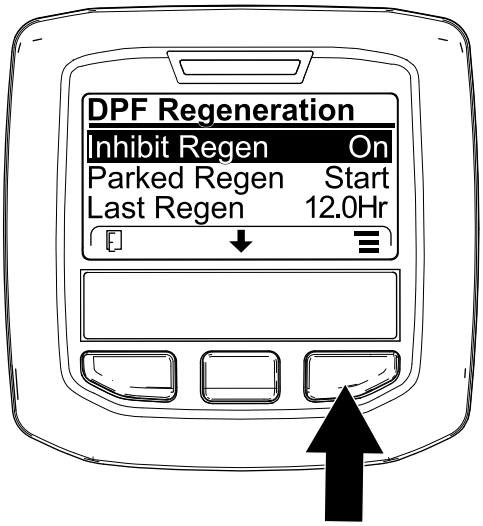

g227304

Figure 70

2. Press the right button to change the inhibit regeneration setting from On to Off (Figure 70) or from Off to On (Figure 71).

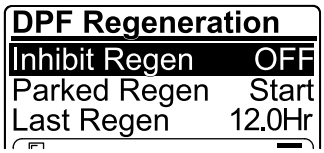

g224691

Figure 71

Allowing a Reset Regeneration

The InfoCenter displays the high exhaust-temperature icon when the reset regeneration is in process.

Note: If INHIBIT REGEN is set to ON, the InfoCenter displays ADVISORY #185 (Figure 72). Press button 3 to set inhibit regeneration setting to OFF and continue with the reset regeneration.

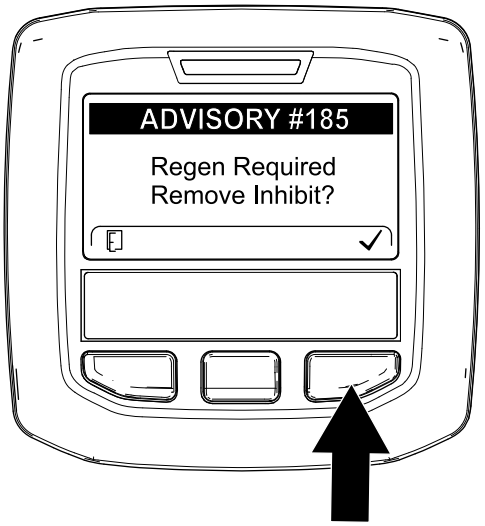

g224394

Figure 72

Note: If the engine exhaust temperature is too low, the InfoCenter displays ADVISORY #186 (Figure 73) to inform you to set the engine to full throttle (high idle).

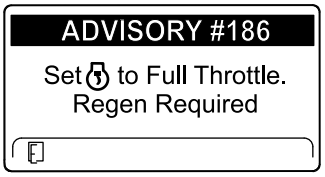

g224395

Figure 73

Note: When the reset regeneration completes, the high exhaust-temperature disappears from the InfoCenter screen.

Parked or Recovery Regeneration

- When the engine computer requests either a parked regeneration or a recovery regeneration, the regeneration request icon (Figure 74) displays in the InfoCenter.

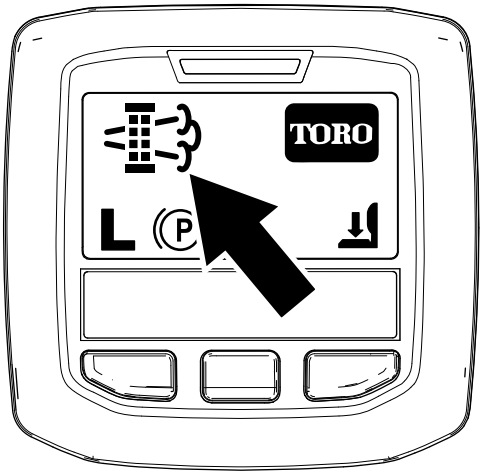

g224404

Figure 74

- The machine does not automatically perform a parked regeneration or a recovery regeneration, you must run the regeneration through the InfoCenter.

Parked Regeneration Messages

When a parked regeneration is requested by the engine computer the following messages display in the InfoCenter:

- Engine warning SPN 3720, FMI 16 (Figure 75)

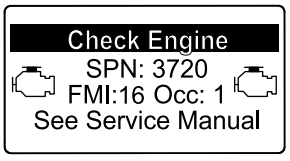

g213863

Figure 75

- Parked regeneration required ADVISORY #188 (Figure 76)

  Note: Advisory #188 displays every 15 minutes.

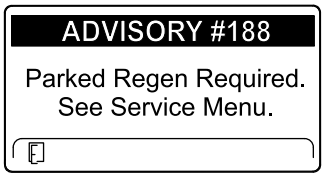

g224397

Figure 76

- If you do not perform a parked regeneration within 2 hours, the InfoCenter displays parked regeneration required—power takeoff disabled ADVISORY #189 (Figure 77).

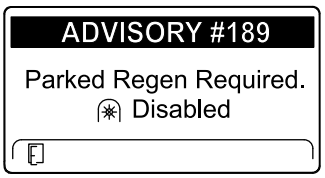

g224398

Figure 77

Important: **Perform a parked regeneration to restore the PTO function; refer to Preparing to Perform a Parked or Recovery Regeneration (page 46) and Performing a Parked or Recovery Regeneration (page 46).**

Note: The Home screen displays the PTO disabled Icon (Figure 78).

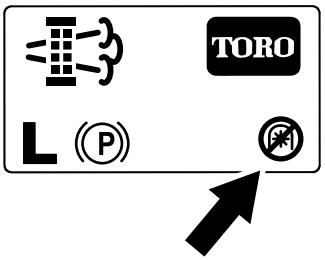

g224415

Figure 78

Recovery Regeneration Messages

When a recovery regeneration is requested by the engine computer, the following messages display in the InfoCenter:

- Engine warning SPN 3719, FMI 0 (Figure 79)

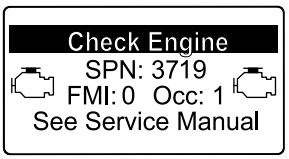

g213867

Figure 79

- Recovery regeneration required—power takeoff disabled ADVISORY #190 (Figure 80)

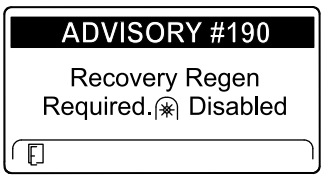

g224399

Figure 80

Important: **Perform a recovery regeneration to restore the PTO function; refer to Preparing to Perform a Parked or Recovery Regeneration (page 46) and Performing a Parked or Recovery Regeneration (page 46).**

Note: The Home screen displays the PTO disabled Icon; refer to Figure 78 in Parked Regeneration Messages (page 45).

DPF Status-Limitation

- If the engine computer requests a recovery regeneration or is processing a recovery regeneration and you scroll down to the PARKED REGEN option, parked regeneration locks and the lock icon (Figure 81) appears in the lower right corner of the InfoCenter.

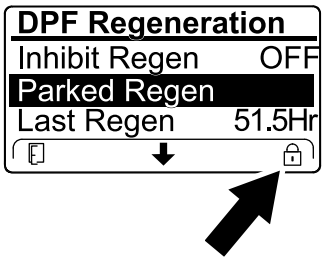

g224625

Figure 81

- If the engine computer has not requested a recovery regeneration and you scroll down to the RECOVERY REGEN option, the recovery regeneration locks and the lock icon (Figure 82) appears in the lower right corner of the InfoCenter.

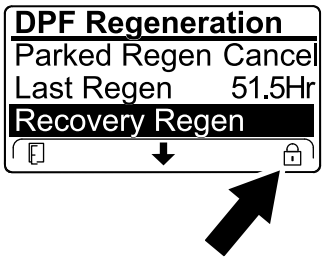

g224628

Figure 82

Preparing to Perform a Parked or Recovery Regeneration

1. Ensure that the machine has fuel in the tank for the type of regeneration you are performing:
   - **Parked Regeneration:** Ensure that you have 1/4 tank of fuel before performing the parked regeneration.
   - **Recovery Regeneration:** Ensure that you have 1/2 tank of fuel before performing the recovery regeneration.
2. Move the machine outside to an area away from combustible materials.
3. Park the machine on a level surface.
4. Ensure that the traction control or motion-control levers are in the NEUTRAL position.
5. If applicable, shut off the PTO, and lower the cutting units or accessories.
6. Engage the parking brake.
7. Set the throttle to the low IDLE position.

Performing a Parked or Recovery Regeneration

⚠ CAUTION

The exhaust temperature is hot (approximately 600°C (1,112°F) during DPF regeneration. Hot exhaust gas can harm you or other people.

- **Never operate the engine in an enclosed area.**
- **Make sure that there are no flammable materials around the exhaust system.**
- **Never touch a hot exhaust system component.**
- **Never stand near or around the exhaust pipe of the machine.**

Important: **The computer of the machine cancels DPF regeneration if you increase the engine speed from low idle or release the parking brake.**

1. Access the DPF Regeneration menu, press the center button to scroll down to either the PARKED REGEN START option or the RECOVERY REGEN START option (Figure 83), and press the right button to select the start the regeneration (Figure 83).

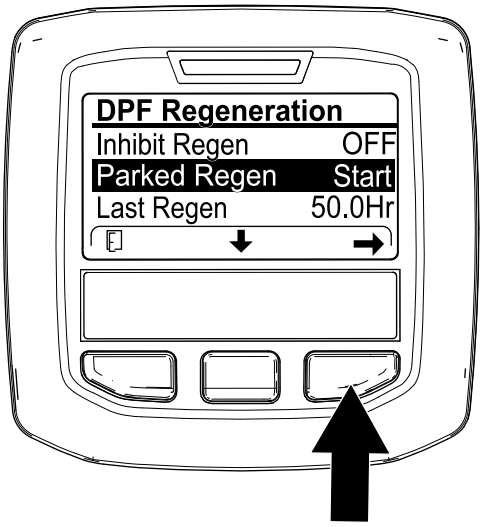

g224402

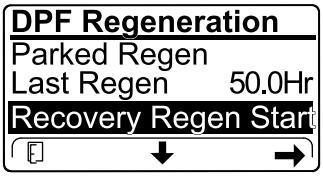

g224629

Figure 83

2. At the VERIFY FUEL LEVEL screen, verify that you have 1/4 tank of fuel if you are performing the parked regeneration or 1/2 tank of fuel if you are performing the recovery regeneration, and press the right button to continue (Figure 84).

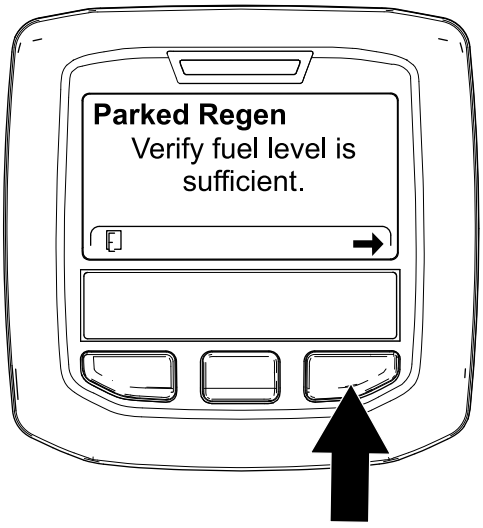

g224414

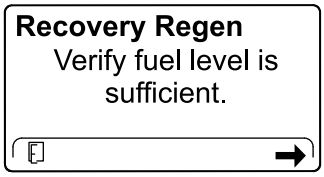

g227678

Figure 84

3. At the DPF checklist screen, verify that the parking brake is engaged and that the engine speed is set to low idle (Figure 85).

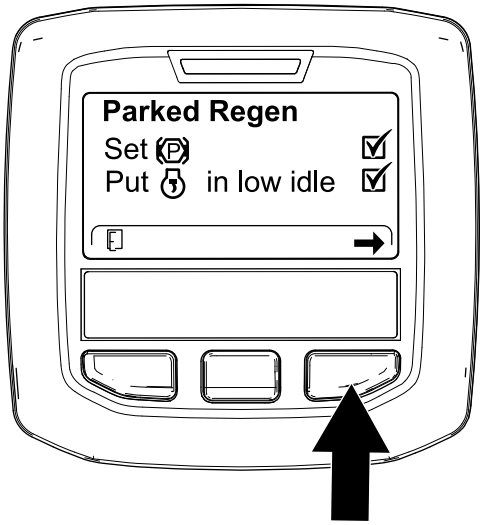

g224407

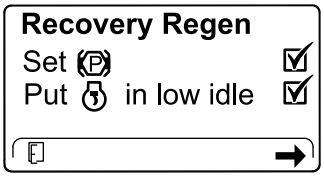

g227679

Figure 85

4. At the INITIATE DPF REGEN screen, press the right button to continue (Figure 86).

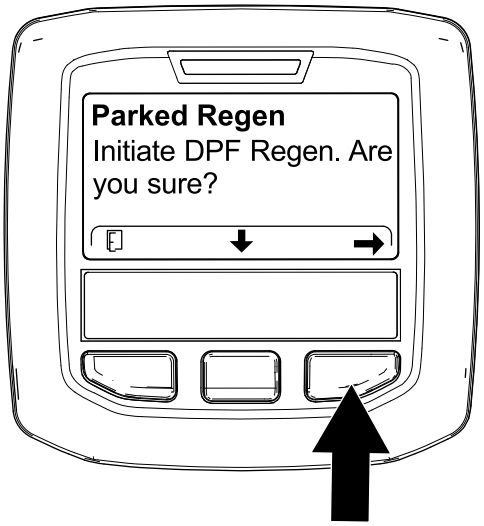

g224626

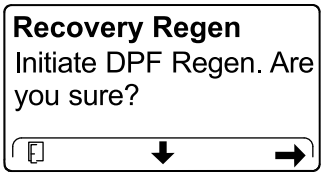

g224630

Figure 86

5. The InfoCenter displays the INITIATING DPF REGEN message (Figure 87).

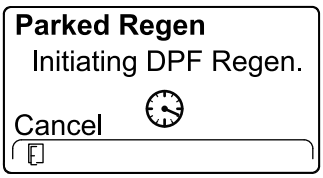

g224411

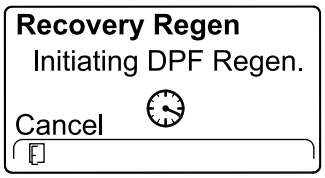

g227681

Figure 87

6. The InfoCenter displays the time to complete message (Figure 88).

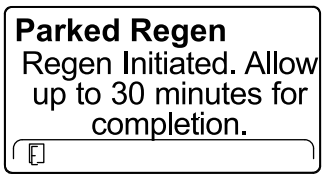

g224406

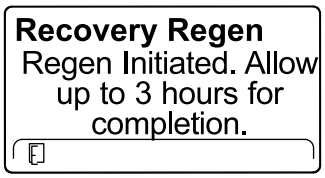

g224416

Figure 88

7. The engine computer checks the engine state and fault information. The InfoCenter may display the following messages found in the table that follows:

Check Message and Corrective Action Table

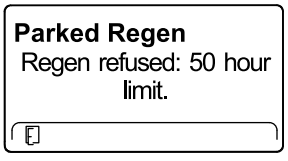

Corrective Action: Exit the regeneration menu and run the machine until the time since last regeneration is greater than 50 hours; refer to Time Since Last Regeneration (page 41).

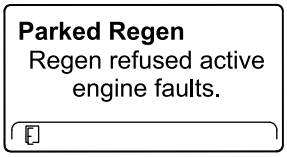

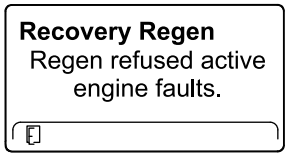

Corrective Action: Troubleshoot the engine fault and retry DPF regeneration.

Check Message and Corrective Action Table (cont'd.)

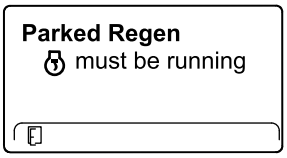

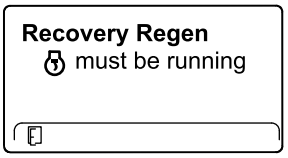

Corrective Action: Start and run the engine.

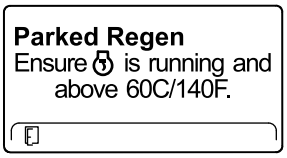

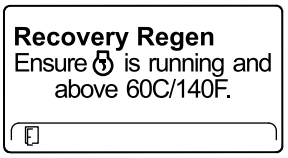

Corrective Action: Run the engine to warm the coolant temperature to 60°C (140°F).

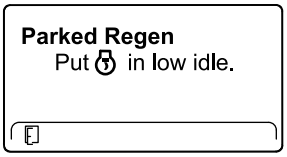

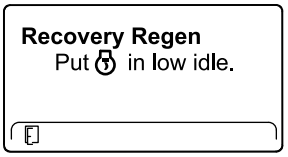

Corrective Action: Change the engine speed to low idle.

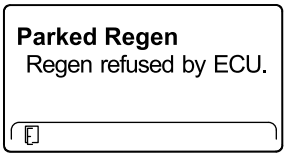

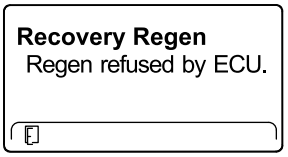

Corrective Action: Troubleshoot the engine computer condition and retry DPF regeneration.

8. The InfoCenter displays the home screen and the regeneration acknowledge icon (Figure 89) appears in the lower right corner of the screen as the regeneration processes.

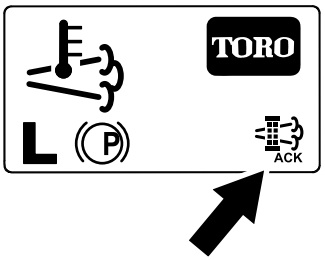

g224403

Figure 89

Note: While the DPF regeneration runs, the InfoCenter displays the high exhaust-temperature icon .

9. When the engine computer completes a parked or recovery regeneration, the InfoCenter

displays ADVISORY #183 (Figure 90). Press the left button to exit to the home screen.

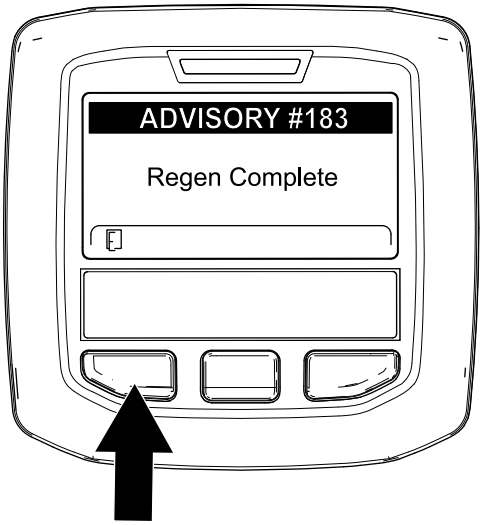

g224392

Figure 90

Note: If the regeneration fails to complete, the InfoCenter displays Advisory #184 (Figure 90). Press the left button to exit to the home screen.

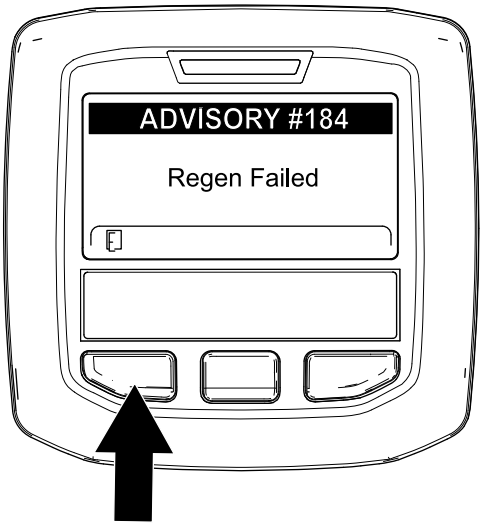

g224393

Figure 91

Canceling a Parked or Recovery Regeneration

Use the Parked Regen Cancel or Recovery Regen Cancel setting to cancel a running parked or recovery regeneration process.

1. Access the DPF Regeneration menu (Figure 92).

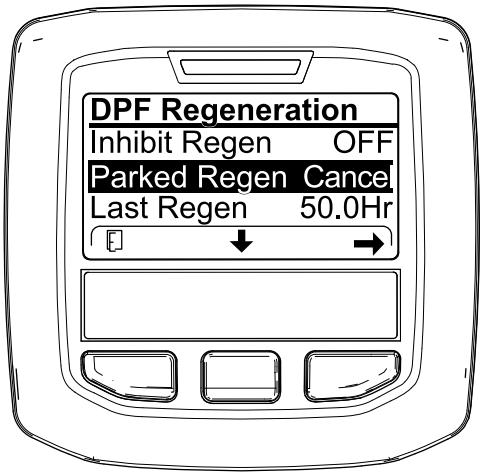

g227305

Figure 92

2. Press the center button to scroll down to the PARKED REGEN CANCEL (Figure 92) or the RECOVERY REGEN CANCEL option (Figure 93).

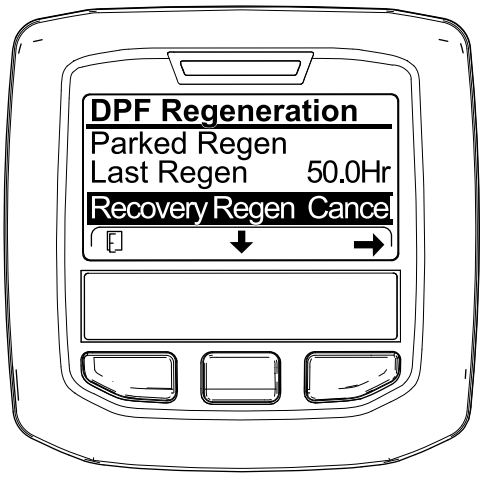

g227306

Figure 93

3. Press the right button to select the Regen Cancel entry (Figure 92 or Figure 93).

Operating Tips

Becoming Familiarized with the Machine

Before mowing grass, practice operating the machine in an open area. Start and shut off the engine. Operate in forward and reverse. Lower and raise the cutting units and engage and disengage the reels. When you feel familiar with the machine, practice operating up and down slopes at different speeds.

Understanding the Warning System

If a warning light comes on during operation, stop the machine immediately and correct the problem before continuing operation. Serious damage could occur if you operate the machine with a malfunction.

Mowing

Start the engine and move the engine-speed switch to the FAST position. Move the Enable/Disable switch to the ENABLE position and use the Lower Mow/Raise lever to control the cutting units (the front cutting units are timed to lower before the rear cutting units). To move forward and cut grass, press the traction pedal forward.

Transporting the Machine

Move the Enable/Disable switch to the DISABLE position and raise the cutting units to the TRANSPORT position. Move the Mow/Transport lever to the TRANSPORT position. Be careful when driving between objects so you do not accidentally damage the machine or cutting units. Use extra care when operating the machine on slopes. Drive slowly and avoid sharp turns on slopes to prevent rollovers. Lower the cutting units when going downhill for steering control.

After Operation

After Operation Safety

General Safety

- Park the machine on a level surface.
- Disengage and lower the cutting units.
- Engage the parking brake.
- Shut off the engine and remove the key.
- Wait for all movement to stop.
- Allow the machine to cool before adjusting, servicing, cleaning, or storing it.
- Clean grass and debris from the cutting units, drives, mufflers, cooling screens, and engine compartment to help prevent fires. Clean up oil or fuel spills.
- Disengage the drive to the attachment whenever you are hauling or not using the machine.
- Maintain and clean the seat belt(s) as necessary.
- Do not store the machine or fuel container where there is an open flame, spark, or pilot light, such as on a water heater or on other appliances.

Hauling the Machine

- Use full-width ramps for loading the machine onto a trailer or truck.
- Tie the machine down securely.

Tie-Down Point Locations

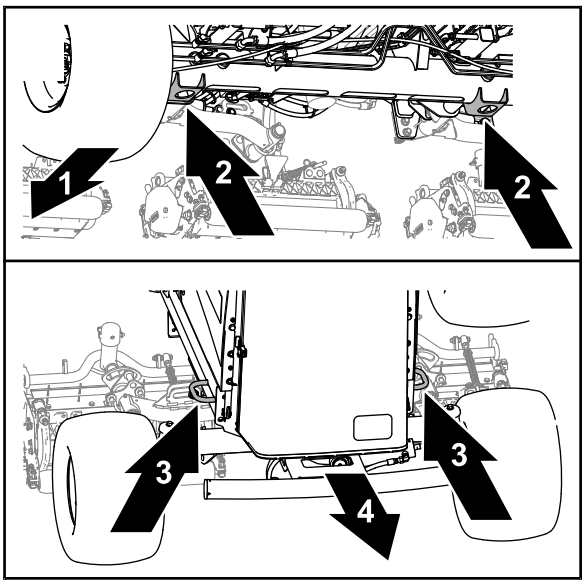

g375766

Figure 94

1. Front of the machine
2. Jack brackets (front axle tube)
3. Frame hoops
4. Back of the machine

- Front—the hole in the jack brackets of the front-axle tube (Figure 94).
- Rear—the frame hoops at each side of the machine.

Pushing or Towing the Machine

In an emergency, you can move the machine by actuating the bypass valve in the variable displacement hydraulic pump and pushing or towing the machine.

Important: **Do not push or tow the machine faster than 3 to 4.8 km/h (2 to 3 mph) because internal transmission damage may occur. The bypass valve must be open whenever you push or tow the machine.**

1. Engage the parking brake, shut off the engine, and remove the key.
2. Open the hood; refer to Opening the Hood (page 55).
3. At the variable-displacement pump, rotate the bypass-valve bolt 1-1/2 turns to open and allow oil to bypass internally (Figure 95).

   Note: The bypass valve is located at the left side of the pump. By bypassing the fluid, you can move the machine slowly without damaging the transmission.

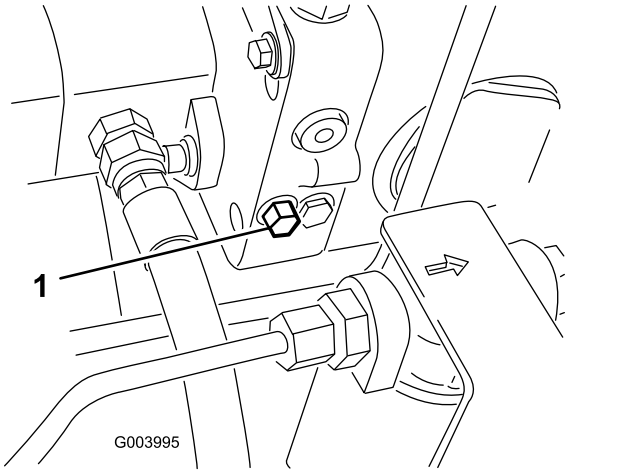

g003995

Figure 95

1. Bypass-valve bolt

4. Close and latch the hood.
5. Push or tow the machine.
6. Before starting the engine, close the bypass valve. Do not exceed 7 to 11 N·m (5 to 8 ft-lb) torque to close the valve.

   Important: **Running the engine with the bypass valve open causes the transmission to overheat.**

Maintenance

Note: Determine the left and right sides of the machine from the normal operating position.

Note: Download a free copy of the electrical or hydraulic schematic by visiting www.Toro.com and searching for your machine from the Manuals link on the home page.

Maintenance Safety

- Before you leave the operator's position, do the following:
  - Park the machine on a level surface.
  - Disengage and lower the cutting units.
  - Engage the parking brake.
  - Shut off the engine and remove the key.
  - Wait for all movement to stop.
  - Allow the machine to cool before adjusting, servicing, cleaning, or storing it.
- Allow machine components to cool before performing maintenance.
- If possible, do not perform maintenance while the engine is running. Keep away from moving parts.
- Support the machine with jack stands whenever you work under the machine.
- Carefully release pressure from components with stored energy.
- Keep all parts of the machine in good working condition and all hardware tightened.
- Replace all worn or damaged decals.
- To ensure safe, optimal performance of the machine, use only genuine Toro replacement parts. Replacement parts made by other manufacturers could be dangerous, and such use could void the product warranty.

Recommended Maintenance Schedule(s)

Maintenance Service Interval	Maintenance Procedure
After the first hour	• Torque the wheel lug nuts to 94 to 122 N·m (70 to 90 ft-lb).
After the first 8 hours	• Check the condition and tension of the alternator belt.
After the first 10 hours	• Torque the wheel lug nuts to 94 to 122 N·m (70 to 90 ft-lb).
Before each use or daily	• Inspect the seat belt(s) for wear, cuts, and other damage. Replace the seat belt(s) if any component does not operate properly. • Check the interlock switches. • • Check the level of the engine oil. • Drain water and contaminants from the fuel-water separator. • Check the tire air pressure. • Check the coolant level. • Remove debris from the screen, oil coolers, and radiator. (More frequently in dirty operating conditions). • Check the hydraulic-fluid level. • Check the hydraulic lines and hoses. • Check the reel-to-bedknife contact. • Inspect the seat belt.
Every 50 hours	• Grease the bearings and bushings (and immediately after every washing). • Service the battery.
Every 100 hours	• Inspect the cooling system hoses. • Check the condition and tension of the alternator belt.
Every 250 hours	• Change the engine oil and filter. • Torque the wheel lug nuts to 94 to 122 N·m (70 to 90 ft-lb).

Maintenance Service Interval	Maintenance Procedure
Every 400 hours	• Service the air cleaner. (more frequently in extremely dirty or dusty conditions). Service the air cleaner earlier if the air-cleaner indicator shows red. • Replace the fuel filter. • Replace the engine fuel filter. • Check the fuel lines and connections for deterioration, damage, or loose connections (or yearly, whichever comes first).
Every 800 hours	• Check the rear wheel toe-in. • If you are not using the recommended hydraulic fluid or have ever filled the reservoir with an alternative fluid, replace the return-hydraulic filter and charge-hydraulic filter. • If you are not using the recommended hydraulic fluid or have ever filled the reservoir with an alternative fluid, change the hydraulic fluid.
Every 1,000 hours	• If you are using the recommended hydraulic fluid, replace the return-hydraulic filter and charge-hydraulic filter.
Every 2,000 hours	• If you are using the recommended hydraulic fluid, change the hydraulic fluid.
Every 6,000 hours	• Disassemble, clean, and assemble the soot filter of the DPF or clean the soot filter if engine faults SPN 3251 FMI 0, SPN 3720 FMI 0, or SPN 3720 FMI 16 display in the InfoCenter.
Every 2 years	• Flush and replace the cooling system fluid. • Replace the hydraulic hoses. • Replace the coolant hoses. • Flush and replace the coolant.

Daily Maintenance Checklist

Duplicate this page for routine use.

Maintenance Check Item	For the week of: Mon.	Tues.	Wed.	Thurs.	Fri.	Sat.	Sun.
Check the safety interlock operation.							
Check the brake operation.							
Check the engine oil and fuel level.							
Drain the water/fuel separator.							
Check the air filter restriction indicator.							
Check the radiator and screen for debris.							
Check unusual engine noises.[1]							
Check unusual operating noises.							
Check the hydraulic system fluid level.							
Check the hydraulic filter indicator. [2]							
Check hydraulic hoses for damage.							
Check for fluid leaks.							
Check the tire pressure.							
Check the instrument operation.							
Check the reel-to-bedknife adjustment.							
Check the height-of-cut adjustment.							
Check all grease fittings for lubrication.[3]							
Touch-up damaged paint.							
Wash the machine.							

1. Check the glow plug and injector nozzles if hard starting, excess smoke, or rough running is noted.
2. Check with the engine running and the oil at operating temperature
3. Immediately after every washing, regardless of the interval listed

Important: **Refer to your engine owner's manual and cutting unit *Operator's Manual* for additional maintenance procedures.**

Notation for Areas of Concern

Inspection performed by:		
Item	**Date**	**Information**
1		
2		
3		
4		
5		
6		
7		
8		

Pre-Maintenance Procedures

Preparing for Maintenance

1. Park the machine on a level surface, press the enable/disable switch to the DISENGAGE and position, lower the cutting units, and engage the parking brake.
2. Shut off the engine, remove the key, and wait for all moving parts to stop.
3. Wait for the engine to cool.

Opening the Hood

1. Release the 2 hood latches (Figure 96).

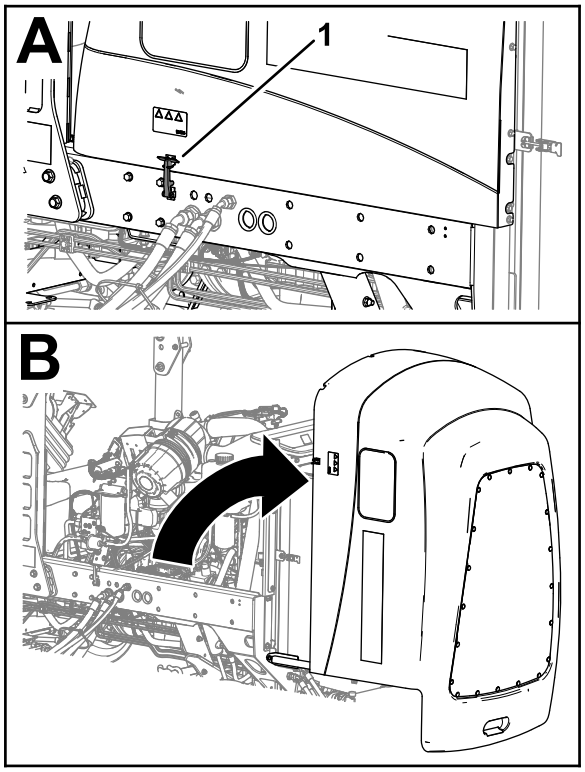

g369009

Figure 96

1. Hood latch (2)

2. Rotate open the hood.

Closing the Hood

1. Carefully rotate the hood closed (Figure 97).

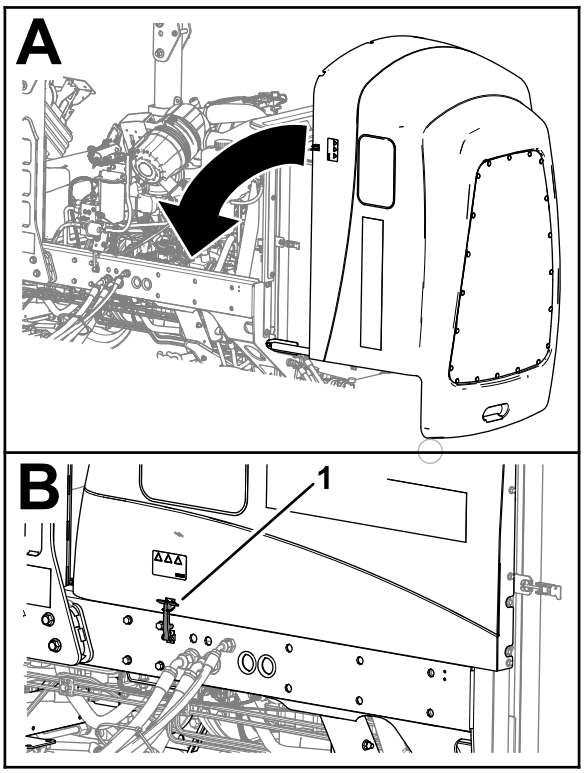

g369219

Figure 97

1. Hood latch (2)

2. Secure the hood with the 2 hood latches.

Opening the Screen

1. Remove the ball pin from the screen latch (Figure 98).

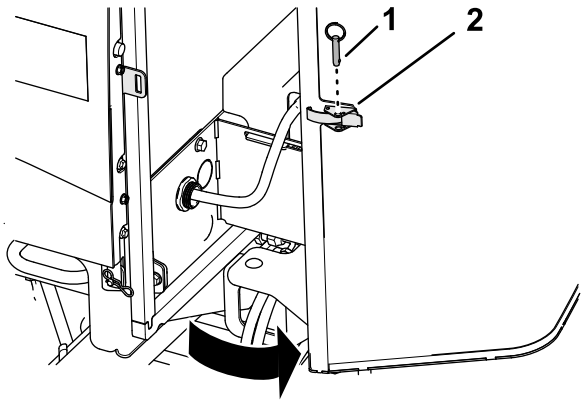

g378175

Figure 98

1. Ball pin
2. Screen latch

2. Unlatch and open the screen.

Closing the Screen

1. Close and latch the screen (Figure 99).

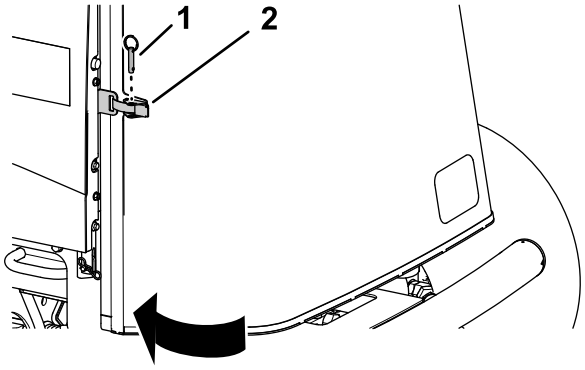

g378174

Figure 99

1. Ball pin
2. Screen latch

2. Insert the ball pin through the screen latch.

Tilting the Seat

1. Move the seat latch outward (Figure 100).

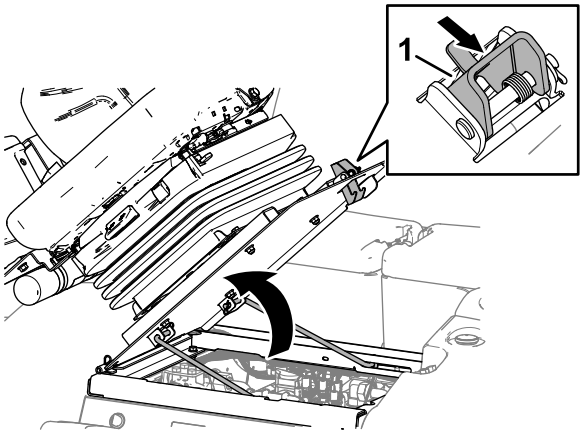

g369007

Figure 100

1. Seat latch

2. Carefully rotate the seat up.
3. Ensure that the forward prop rod seats in the slot detent of the rod-guide plate (Figure 101).

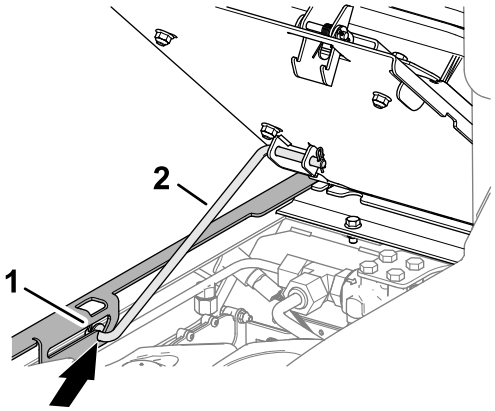

g369008

Figure 101

1. Prop rod
2. Rod-guide plate

Lowering the Seat

1. Rotate the seat slightly, and lift the prop rod out of the dent of the seat support slot (Figure 102).

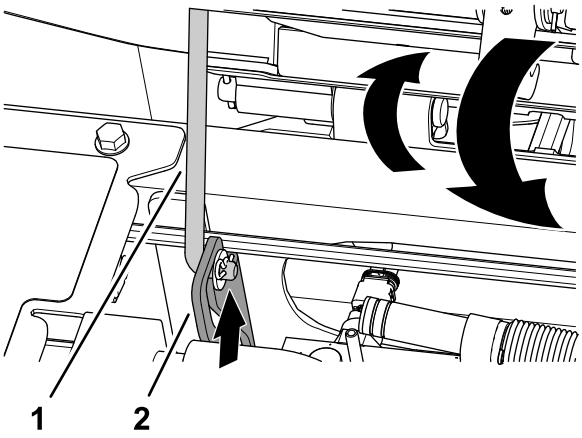

g375779

Figure 102

1. Prop rod
2. Rod-guide plate

2. Carefully lower the seat until it latches securely.

Jacking Point Locations

Note: Support the machine with jack stands whenever you work under the machine; refer to Specifications (page 29).

Use the following as machine-lift points:

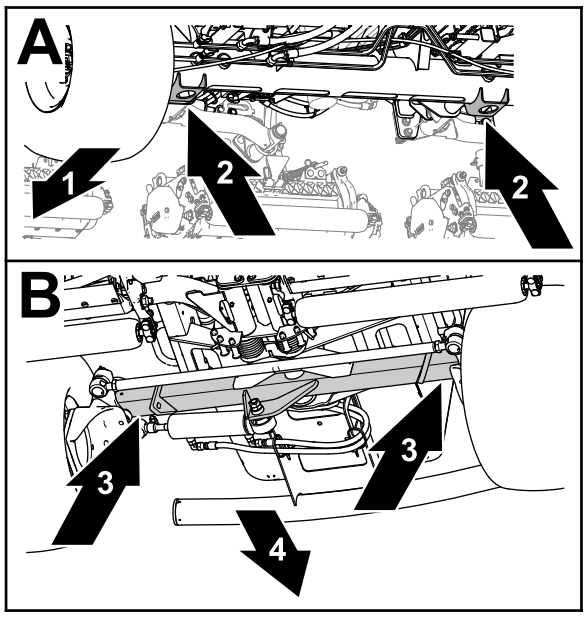

g375763

Figure 103

1. Front of the machine
2. Jack brackets (front-axle tube)
3. Rear-axle tube
4. Back of the machine

- Front—the jack brackets of the front-axle tube (Figure 103).
- Rear—the rear-axle tube.

Lubrication

Greasing the Bearings and Bushings

Service Interval: Every 50 hours (and immediately after every washing).

Grease Specification: No. 2 lithium grease

1. Prepare the machine for maintenance; refer to Preparing for Maintenance (page 55).
2. Open the hood; refer to Opening the Hood (page 55).
3. The lubricate the machine at the fittings at the locations as follows:
   - Pump-driveshaft U-joint (3) (Figure 104)

     Note: The pump-driveshaft is located Under the hood.

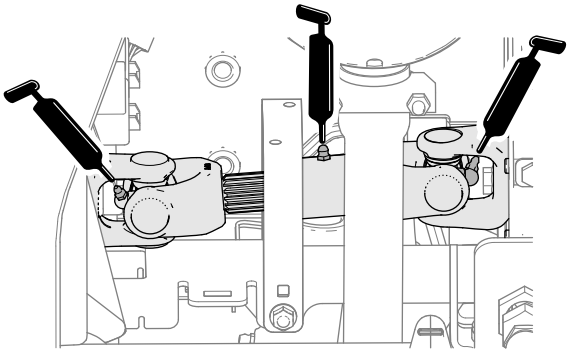

g378043

Figure 104

   - Cutting-unit lift-arm cylinders (2 each) (Figure 105)

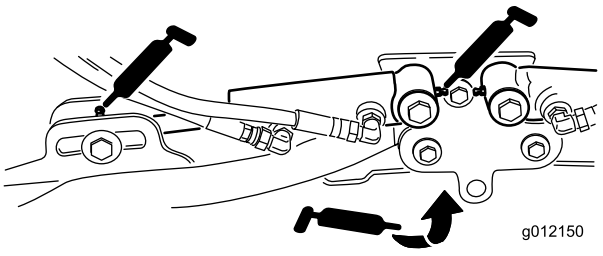

g012150

Figure 105

- Lift-arm pivots (1 each) (Figure 105)
- Cutting-unit carrier-frame and pivot (2 each) (Figure 106)

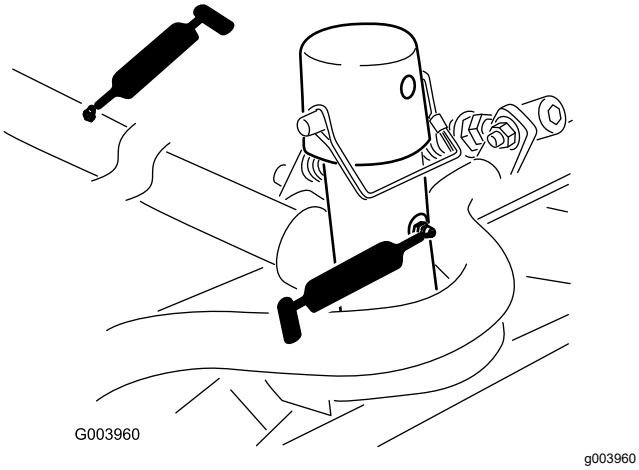

Figure 106

- Lift-arm pivot shaft (1 each) (Figure 107)

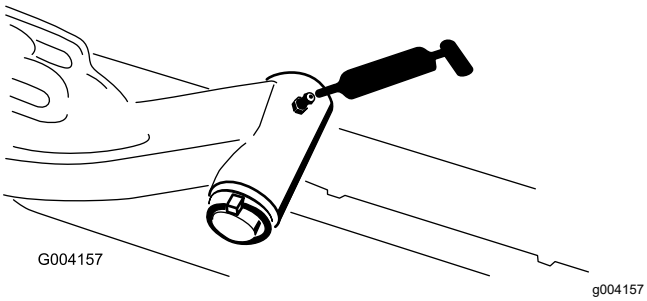

Figure 107

- Rear axle tie rod (2) (Figure 108)

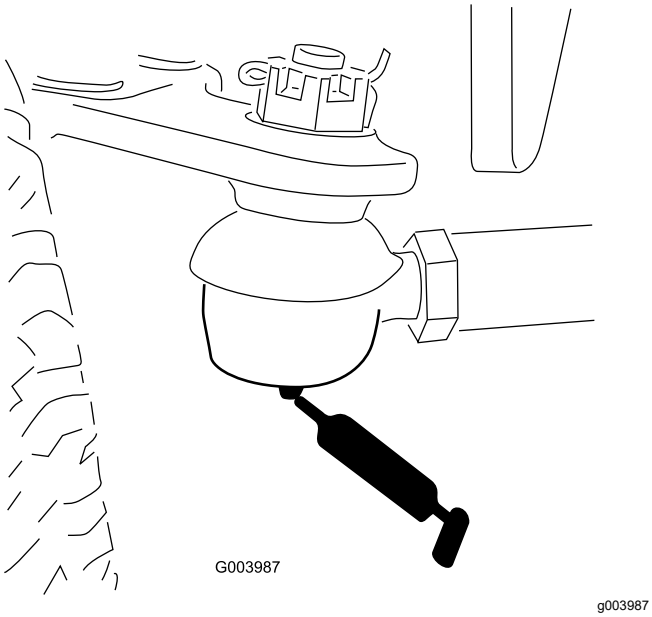

Figure 108

- Axle-steering pivot (1) (Figure 109)

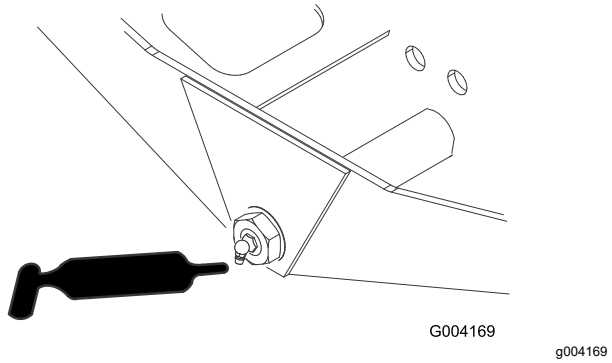

Figure 109

- Steering-cylinder ball joints (2) (Figure 110)

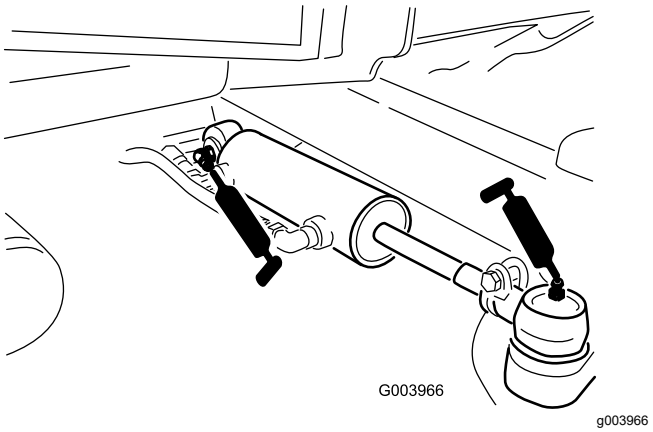

Figure 110

- Brake pedal (1) (Figure 111)

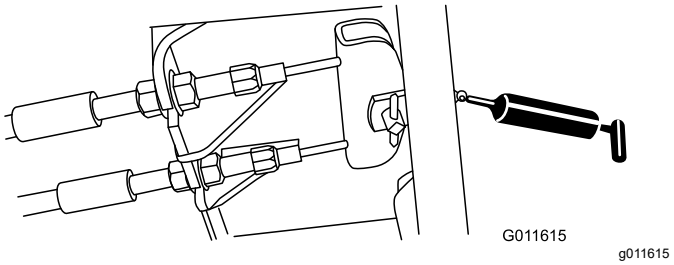

Figure 111

4. Close and latch the hood; refer to Closing the Hood (page 55).

Engine Maintenance

Engine Safety

- Shut off the engine before checking the oil or adding oil to the crankcase.
- Do not change the governor speed or overspeed the engine.

Checking the Air Filter

Service Interval: Before each use or daily

1. Prepare the machine for maintenance; refer to Preparing for Maintenance (page 55).
2. Open the hood; refer to Opening the Hood (page 55).
3. Check the service indicator at the end of the air filter housing (Figure 112).

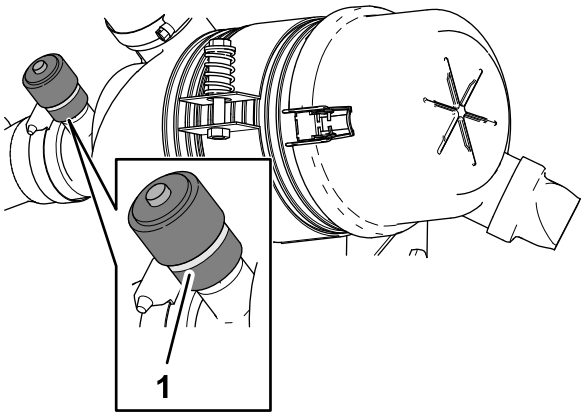

g378073

Figure 112

1. Service indicator

4. If a red band displays in the service indicator, change the air filter; refer to Servicing the Air Cleaner (page 59).
5. Squeeze the dust-ejector valve (Figure 113).

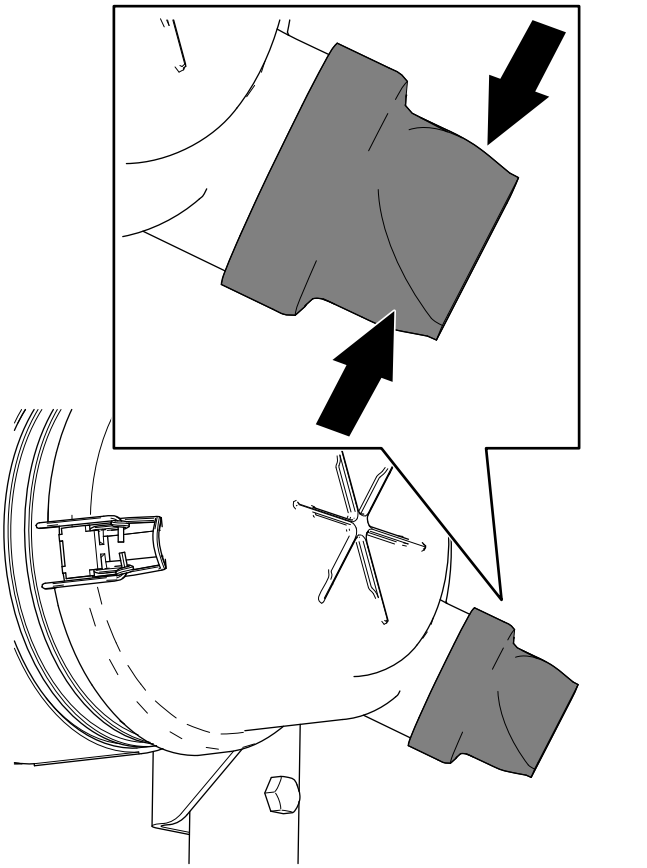

g378074

Figure 113

6. Close and latch the hood; refer to Closing the Hood (page 55).

Servicing the Air Cleaner

Service Interval: Every 400 hours (more frequently in extremely dirty or dusty conditions). Service the air cleaner earlier if the air-cleaner indicator shows red.

Check the air-cleaner body for damage which could cause an air leak. Replace it if it is damaged. Check the whole intake system for leaks, damage, or loose hose clamps.

Service the air-cleaner filter only when the service indicator requires it. Changing the air filter before it is necessary only increases the chance of dirt entering the engine when you remove the filter.

Important: **Make sure that the cover is seated correctly and seals with the air-cleaner body.**

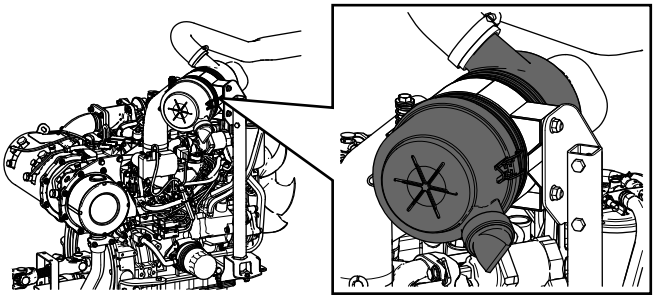

G034923
g034923

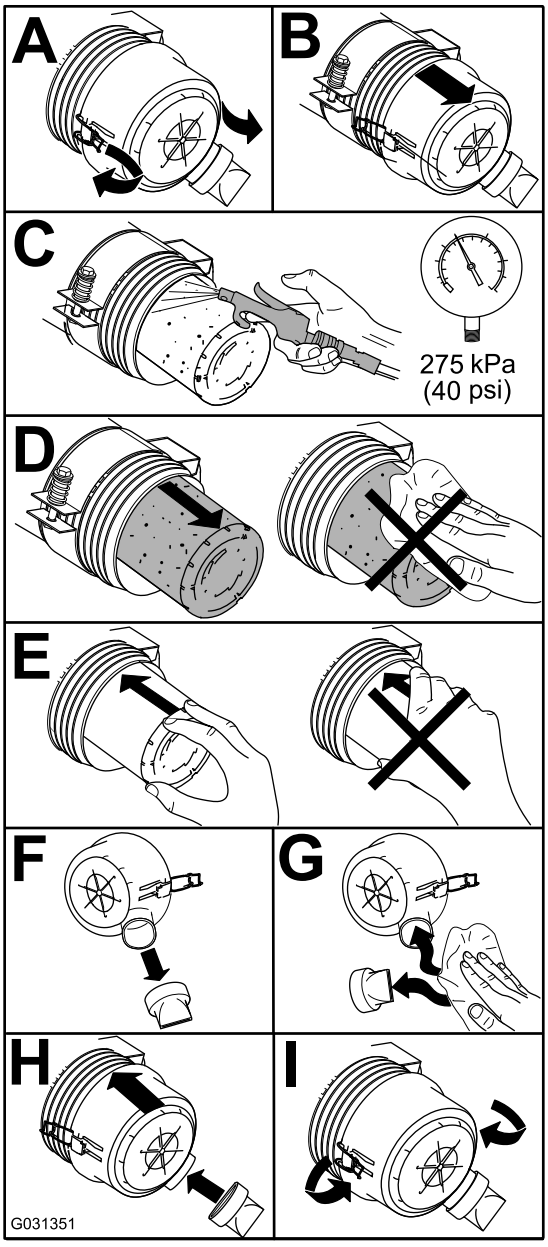

g031351

Figure 114

Resetting the Air Filter Service Indicator

1. If a red band displays in the service indicator, press the reset button at the end of the indicator (Figure 115).

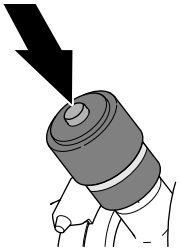

g378075

Figure 115

2. Close and latch the hood; refer to Closing the Hood (page 55).

Servicing the Engine Oil

Oil Specification

Use high-quality, low-ash engine oil that meets or exceeds the following specifications:

- API service category CJ-4 or higher
- ACEA service category E6
- JASO service category DH-2

Important: **Using engine oil other than API CJ-4 or higher, ACEA E6, or JASO DH-2 may cause the diesel particulate filter to plug or cause engine damage.**

Use the following engine oil viscosity grade:

- Preferred oil: SAE 15W-40 (above -18°C (0°F))
- Alternate oil: SAE 10W-30 or 5W-30 (all temperatures)

Toro Premium Engine Oil is available from your authorized Toro distributor in either 15W-40 or 10W-30 viscosity grades.

Checking the Level of the Engine Oil

Service Interval: Before each use or daily

Important: **Check the engine oil daily. If the engine-oil level is above the Full mark on the dipstick, the engine oil may be diluted with fuel; If the engine oil level is above the Full mark, change the engine oil.**

The best time to check the engine oil is when the engine is cool before it has been started for the day. If it has already been run, allow the oil to drain back down to the sump for at least 10 minutes before checking. If the oil level is at or below the Add mark on the dipstick, add oil to bring the oil level to the Full mark. **Do not overfill the engine with oil**.

Important: **Keep the engine oil level between the upper and lower limits on the oil gauge; the engine may fail if you run it with too much or too little oil.**

1. Prepare the machine for maintenance; refer to Preparing for Maintenance (page 55).
2. Open the hood; refer to Opening the Hood (page 55).
3. Check the level of the engine oil (Figure 116).

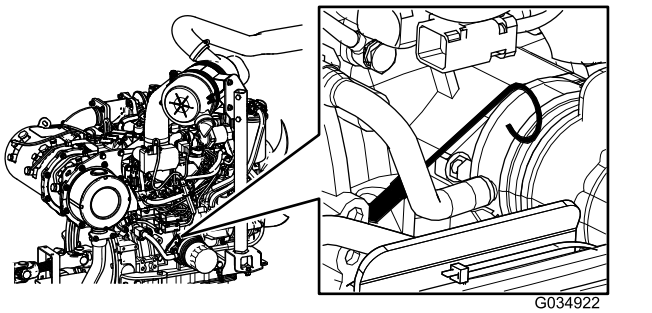

g034922

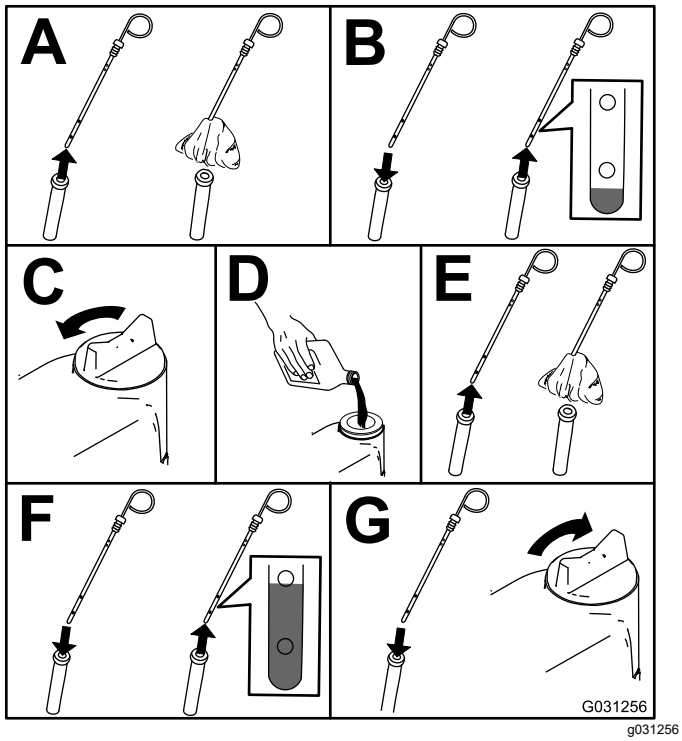

g031256

Figure 116

Important: **Be sure to keep the level of the engine oil between the upper and lower limits on the oil gauge. Engine failure may occur because of over filling or under filling the engine oil.**

4. Close and latch the hood; refer to Closing the Hood (page 55).

Crankcase Oil Capacity

5.2 L (5.5 US qt) with the filter

Changing the Engine Oil and Filter

Service Interval: Every 250 hours

1. Prepare the machine; refer to Preparing for Maintenance (page 55).
2. Drain the oil and change the filter.

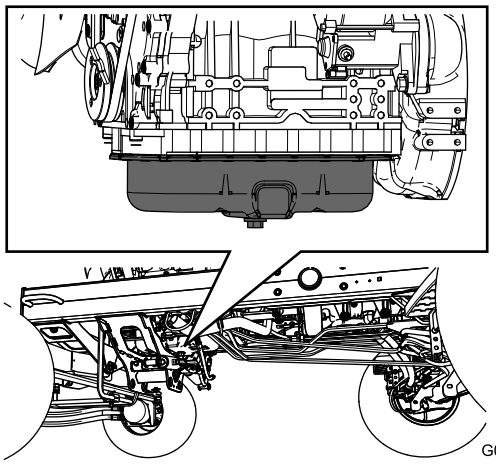

g034924

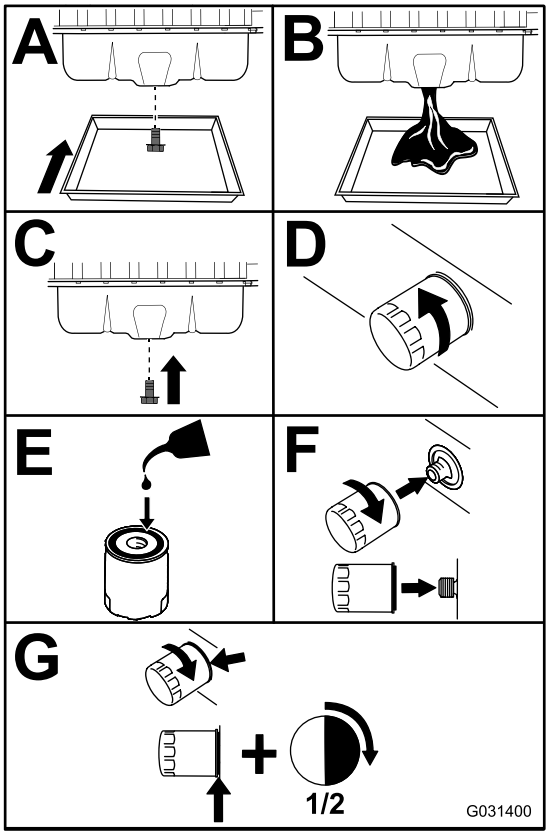

g031400

Figure 117

Important: **Do not overtighten the filter.**

3. Open the hood; refer to Opening the Hood (page 55).
4. Add oil to the crankcase; refer to Oil Specification (page 60), Crankcase Oil Capacity (page 61), and Checking the Level of the Engine Oil (page 60).
5. Close and latch the hood; refer to Closing the Hood (page 55).

Servicing the Diesel-Oxidation Catalyst (DOC) and the Soot Filter

Service Interval: Every 6,000 hours—Disassemble, clean, and assemble the soot filter of the DPF or clean the soot filter if engine faults SPN 3251 FMI 0, SPN 3720 FMI 0, or SPN 3720 FMI 16 display in the InfoCenter.

If engine faults CHECK ENGINE SPN 3251 FMI 0, CHECK ENGINE SPN 3720 FMI 0, or CHECK ENGINE SPN 3720 FMI 16 display in the InfoCenter(Figure 118), clean the soot filter using the steps that follow:

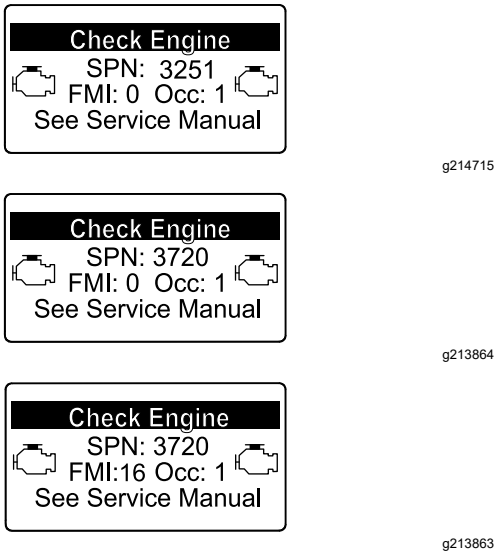

Figure 118

1. Refer to the Engine section in the *Service Manual* for information on disassembling and assembling the diesel-oxidation catalyst and the soot filter of the DPF.
2. Refer to your authorized Toro distributor for diesel-oxidation catalyst and the soot filter replacement parts or service.
3. Contact your authorized Toro distributor to reset the engine ECU after you install a clean DPF.

Fuel System Maintenance

⚠ DANGER

Under certain conditions, fuel and fuel vapors are highly flammable and explosive. A fire or explosion from fuel can burn you and others and can cause property damage.

- **Fill the fuel tank outdoors, in an open area, when the engine is off and is cold. Wipe up any fuel that spills.**
- **Do not fill the fuel tank completely full. Add fuel to the fuel tank until the level is 25 mm (1 inch) below the top of the tank, not the filler neck. This empty space in the tank allows the fuel to expand.**
- **Never smoke when handling fuel, and stay away from an open flame or where fuel fumes may be ignited by a spark.**
- **Store fuel in a clean, safety-approved container and keep the cap in place.**

Draining Water from the Fuel-Water Separator

Service Interval: Before each use or daily—Drain water and contaminants from the fuel-water separator.

1. Prepare the machine for maintenance; refer to Preparing for Maintenance (page 55).
2. Open the hood; Opening the Hood (page 55).
3. Align a drain pan under the drain valve of the fuel-water separator (Figure 119).

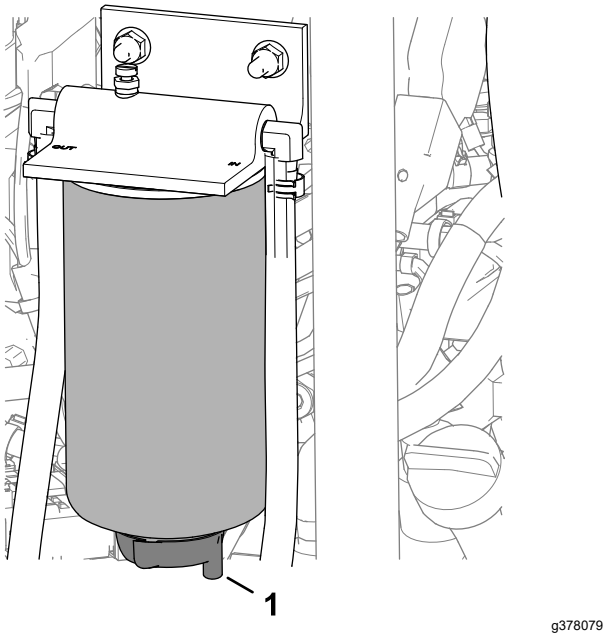

Figure 119

1. Drain valve (fuel-water separator)

4. Open the valve and drain the water and contaminants from the separator.
5. Close the valve of the fuel-water separator.
6. Start the engine and check for leaks.

   Note: Repair all leaks.
7. Shut off the engine and remove the key.
8. Close and latch the hood; Closing the Hood (page 55).

Replacing the Water-Separator Filter

Service Interval: Every 400 hours

1. Fully drain the fuel-water separator; refer to Draining Water from the Fuel-Water Separator (page 62).
2. Clean the filter head and filter canister (Figure 120).

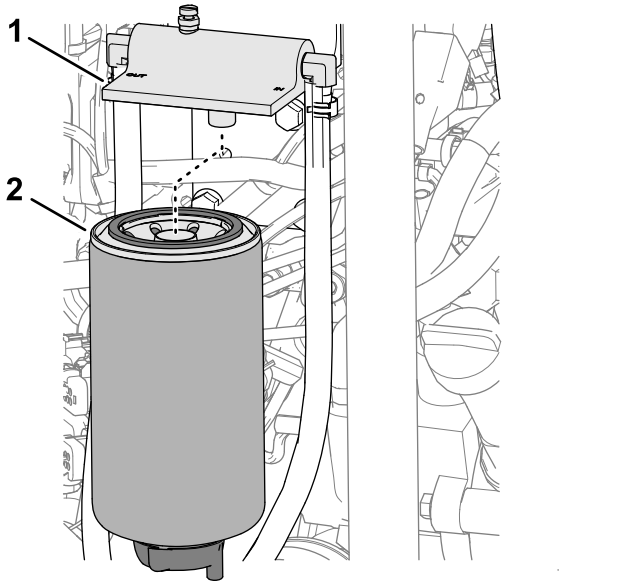

Figure 120

1. Filter head
2. Filter canister

3. Remove the filter canister, and clean the mounting surface of the filter head.
4. Lubricate the gasket on the filter canister with clean fuel.
5. Install the filter canister by hand until the gasket contacts the mounting surface, then rotate it an additional 1/2 turn.
6. Tighten the drain valve at the bottom of the filter canister.
7. Start the engine and check for leaks.

   Note: Repair all leaks.
8. Shut off the engine and remove the key.
9. Close and latch the hood; Closing the Hood (page 55).

Replacing the Engine Fuel Filter

Service Interval: Every 400 hours—Replace the engine fuel filter.

1. Open the hood; refer to Opening the Hood (page 55).
2. Clean the area around the fuel-filter head (Figure 121).

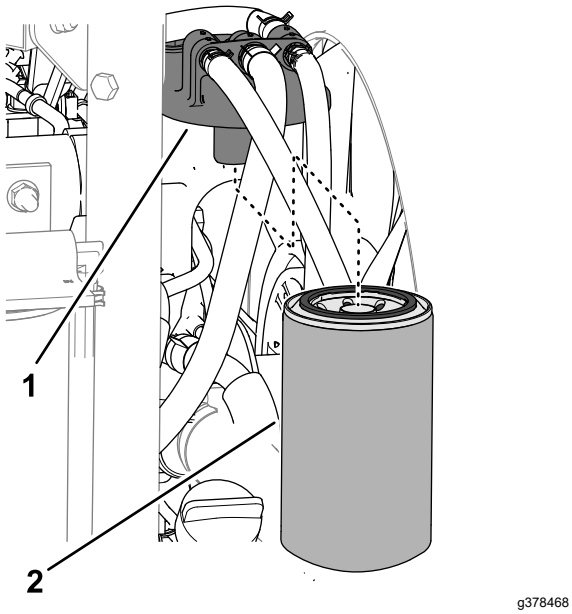

Figure 121

1. Fuel-filter head
2. Fuel filter

3. Remove the filter, and clean the filter-head mounting surface (Figure 121).
4. Lubricate the filter gasket with clean lubricating engine oil.
5. Install the dry filter canister, by hand, until the gasket contacts the filter head, then rotate it an additional 1/2 turn.
6. Start the engine and check for fuel leaks around the filter and filter head.

   Repair all fuel leaks.
7. Shut off the engine and remove the key.
8. Close and latch the hood; refer to Closing the Hood (page 55).

Checking the Fuel Lines and Connections

Service Interval: Every 400 hours (or yearly, whichever comes first).

Check the fuel lines and connections for deterioration, damage, or loose connections.

Cleaning the Fuel-Pickup Tube Screen

Removing the Fuel-Pickup Tube

The fuel-pickup tube, located inside the fuel tank, comes with a screen to help prevent debris from entering the fuel system. Remove the fuel-pickup tube and clean the screen as required.

1. Prepare the machine for maintenance; refer to Preparing for Maintenance (page 55).
2. Remove the 5 Phillips-head screws that secure the fuel-sender cover to the fuel tank, and remove the cover (Figure 122).

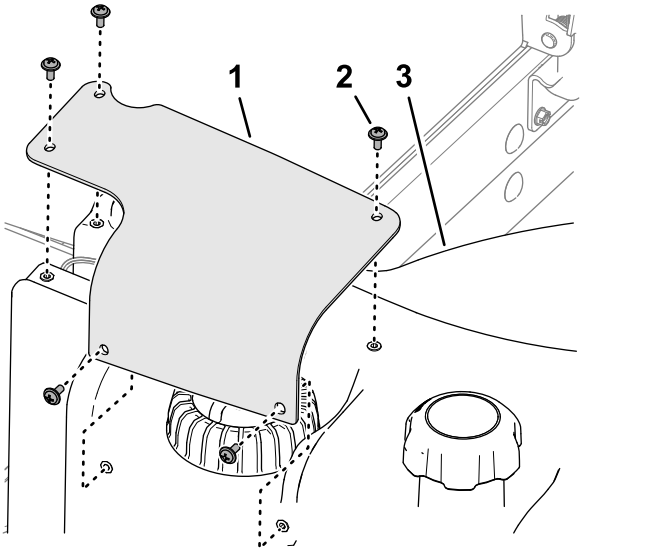

Figure 122

1. Fuel-sender cover
2. Phillips-head screw
3. Fuel tank

3. Remove the 2-socket connector of the fuel-sender harness from the 2-pin connector of the machine wire harness (Figure 123).

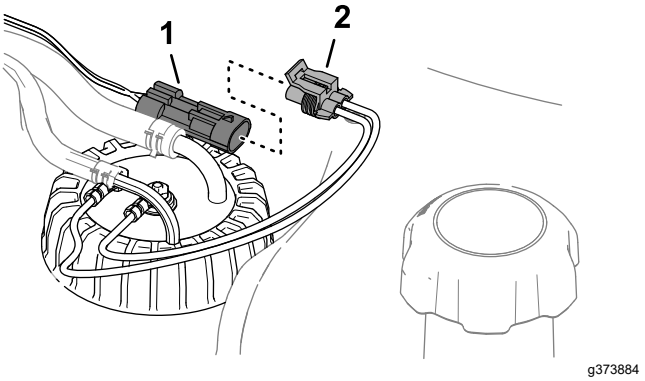

Figure 123

1. 2-pin connector (machine wire harness)
2. 2-socket connector (fuel sender)

4. Move the clamps that secure the hoses to the fittings of the fuel sender inboard, and remove the hoses from the fittings (Figure 124).

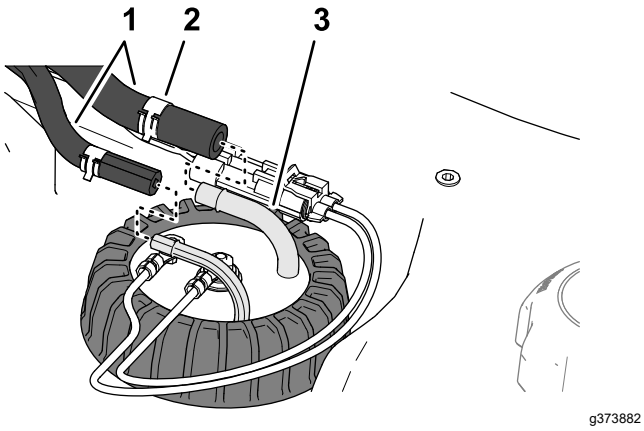

Figure 124

1. Hoses
2. Clamp
3. Fitting (fuel sender)

5. Loosen the fuel-sender cap (Figure 125).

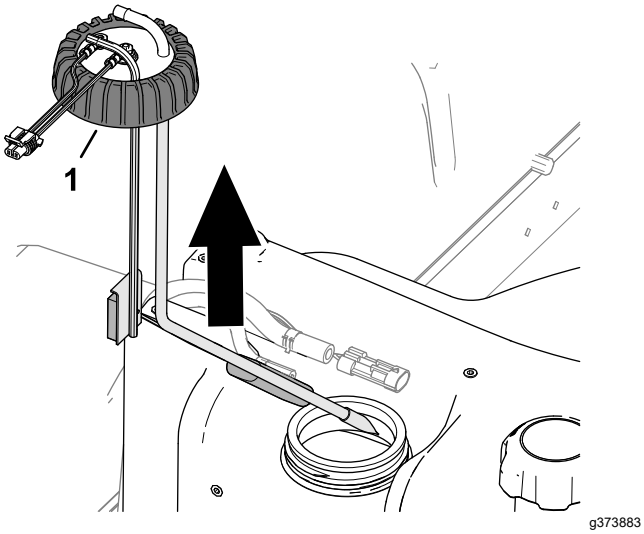

Figure 125

1. Cap (fuel sender)

6. Carefully lift the fuel sender from the tank.

   Note: Do not bend the pick-up tube, return tube, or float arm.

Cleaning the Installing the Fuel-Pickup Tube

1. Clean the screen at the end of the fuel pick-up tube (Figure 126).

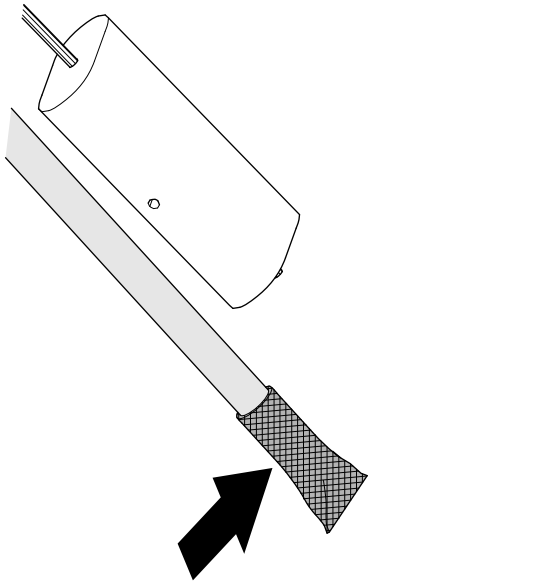

Figure 126

2. Carefully assemble the fuel pick-up tube and float into the fuel tank (Figure 127).

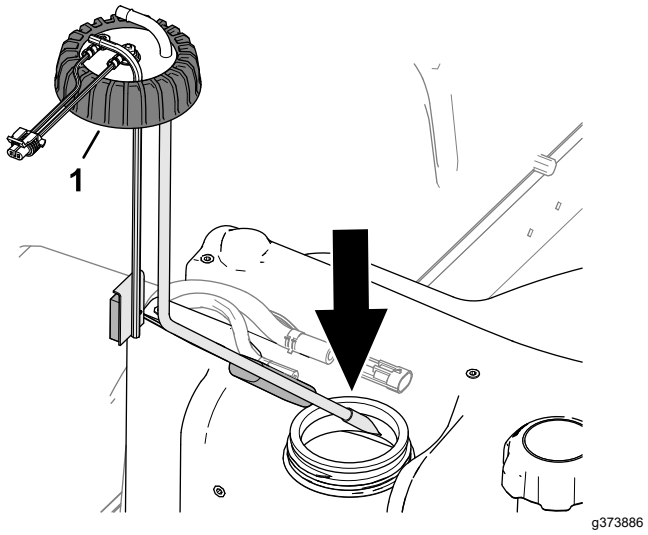

Figure 127

1. Cap (fuel sender)

3. Align the fittings for the pick-up tube and return tube inboard.
4. Tighten the fuel-sender cap to the fuel tank.
5. Assemble the hose onto the fittings of the fuel sender, and secure the hoses to the fittings with the clamps (Figure 128).

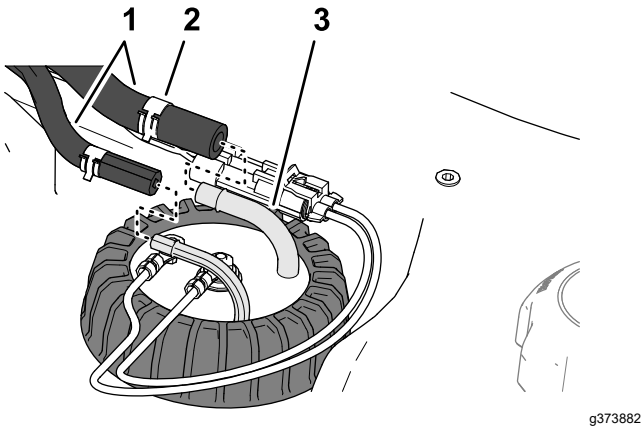

Figure 128

1. Hoses
2. Clamp
3. Fitting (fuel sender)

6. Plug the connector of the fuel-sender harness into the connector of the machine wire harness (Figure 129).

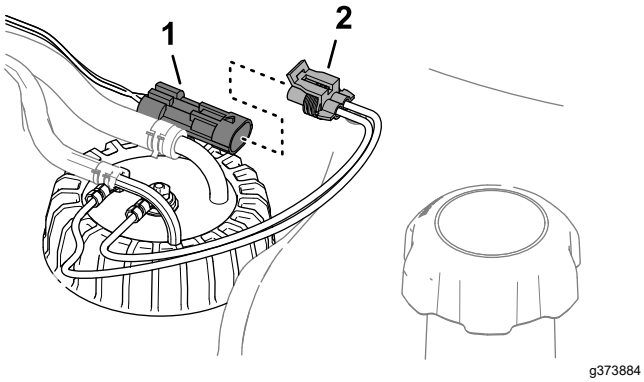

Figure 129

1. 2-pin connector (machine wire harness)
2. 2-socket connector (fuel sender)

7. Align the holes in the fuel-sender cover with the holes in the fuel tank, and secure the cover to the tank with the 5 Phillips-head screws (Figure 130).

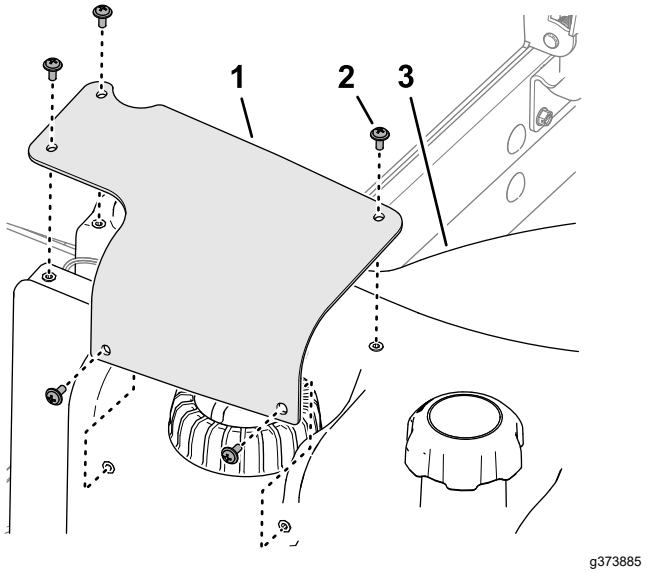

Figure 130

1. Fuel-sender cover
2. Phillips-head screw
3. Fuel tank

Electrical System Maintenance

Electrical System Safety

- Disconnect the battery before repairing the machine. Disconnect the negative terminal first and the positive last. Connect the positive terminal first and the negative last.
- Charge the battery in an open, well-ventilated area, away from sparks and flames. Unplug the charger before connecting or disconnecting the battery. Wear protective clothing and use insulated tools.

Disconnecting the Battery

⚠ DANGER

Battery electrolyte contains sulfuric acid, which is fatal if consumed and causes severe burns.

- **Do not drink electrolyte and avoid contact with skin, eyes, or clothing. Wear safety glasses to shield your eyes and rubber gloves to protect your hands.**
- **Fill the battery where clean water is always available for flushing the skin.**

1. Prepare the machine for maintenance; refer to Preparing for Maintenance (page 55).
2. Open the screen; refer to Opening the Screen (page 55).
3. Press the sides of the battery cover, and remove the cover from the battery tray (Figure 131).

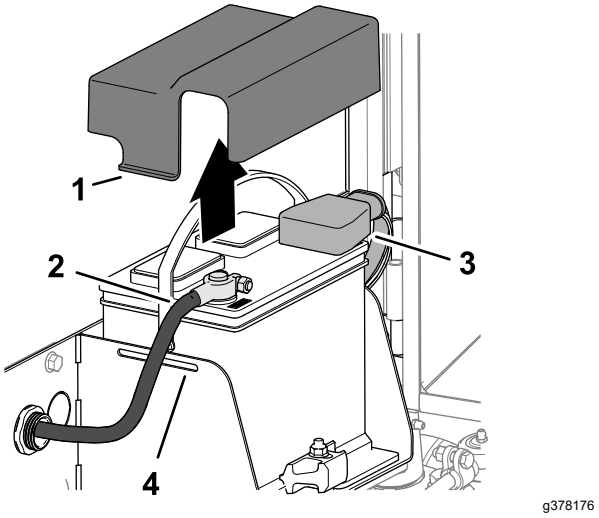

Figure 131

1. Tab (battery cover)
2. Negative battery cable
3. Insulator cover (positive battery cable)
4. Slot (battery tray)

4. Disconnect the negative battery cable.
5. Slide the insulator cover off the positive battery-cable clamp, and disconnect the positive battery cable.

Connecting the Battery

1. Install the positive battery cable (red) to the positive (+) battery post (Figure 132).

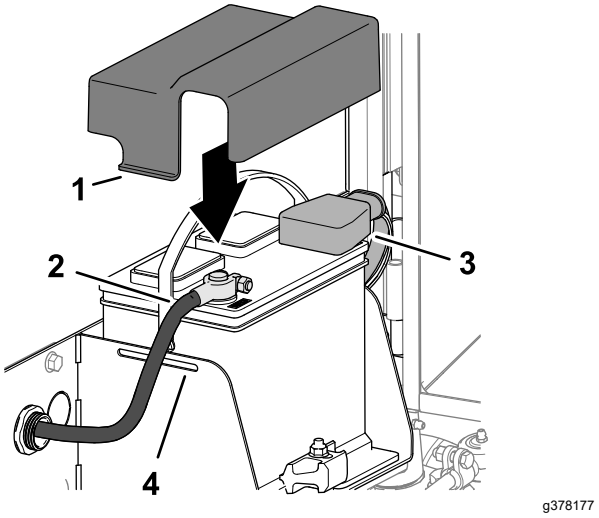

Figure 132

1. Tab (battery cover)
2. Negative battery cable
3. Insulator cover (positive battery cable)
4. Slot (battery tray)

2. Install the negative battery cable (black) to the negative (-) battery post.

3. Apply a coat of Grafo 112X (skin-over) grease, Toro Part No. 505-47 to the battery posts and battery-cable clamps.
4. Slide the rubber boot over the positive battery-cable clamp.
5. Assemble the cover over the battery, inserting the tabs of the cover into the slots in the battery tray.
6. Close and latch the screen; refer to Closing the Screen (page 56).

Charging the Battery

1. Disconnect the battery; refer to Disconnecting the Battery (page 67).
2. Connect a 3 to 4 A battery charger to the battery posts.
3. Charge the battery at a rate of 3 to 4 A for 4 to 8 hours.
4. When the battery is charged, disconnect the charger from the electrical outlet and battery posts.
5. Connect the battery; refer to Connecting the Battery (page 67).

Servicing the Battery

Service Interval: Every 50 hours

Note: Keep the terminals and the entire battery case clean because a dirty battery will discharge slowly.

1. Prepare the machine for maintenance; refer to Preparing for Maintenance (page 55).
2. Open the screen; refer to Opening the Screen (page 55).
3. Check the condition of the battery.

   Note: Replace a worn or damaged battery.
4. Disconnect the battery cables, and remove the battery from the machine; refer to Disconnecting the Battery (page 67).
5. Clean the entire battery case with a solution of sodium bicarbonate (baking soda) and water.
6. Rinse the case with clean water.
7. Assemble the battery to the machine and connect the battery cables; refer to Connecting the Battery (page 67).
8. Close and latch the screen; refer to Closing the Screen (page 56).

Replacing a Fuse-Block Fuse

The fuse block is in the control arm.

1. Prepare the machine for maintenance; refer to Preparing for Maintenance (page 55).
2. Open the 2 latches that secure control-arm cove to the control arm, and remove the cover (Figure 133).

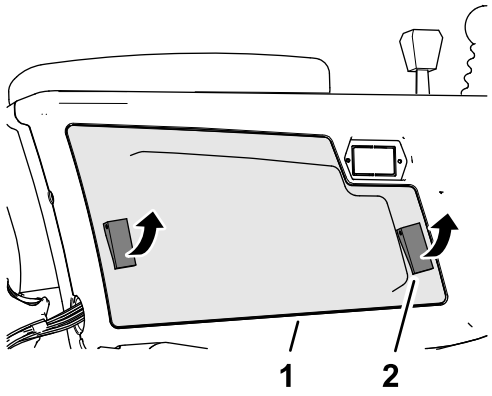

Figure 133

1. Control-arm cover
2. Latch

3. Replace the open fuse (Figure 134) with the same fuse type and amperage rating.

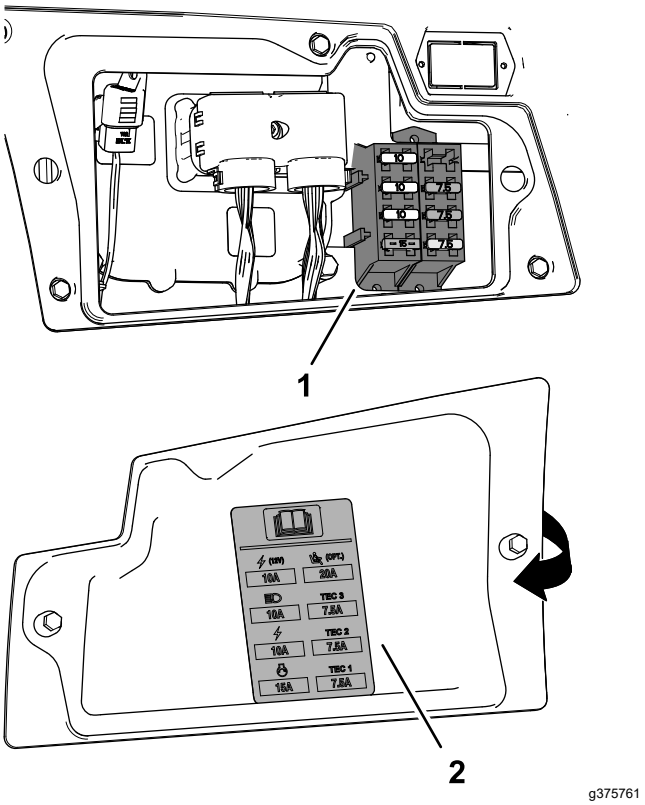

Figure 134

1. Fuse block
2. Fuse decal (inside the control-arm cover)

4. Assemble the control-arm cover to the control arm, and secure the cover with the 2 latches.

Replacing the Telematic Fuse

1. Prepare the machine for maintenance; refer to Preparing for Maintenance (page 55).
2. Unlatch and tilt seat; refer to Tilting the Seat (page 56).
3. Remove the cap from the in-line fuse holder labeled 10 A FUSE TELEMATIC PWR (Figure 135).

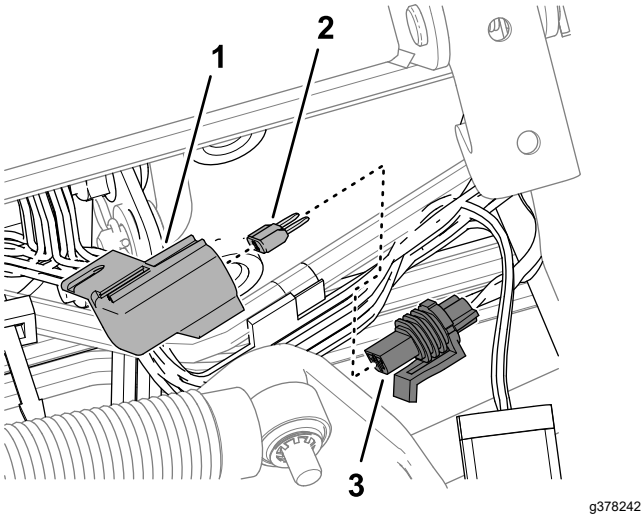

Figure 135

1. Cap
2. Fuse
3. Fuse holder (labeled 10 A FUSE TELEMATIC PWR)

4. Remove the fuse from the fuse holder.
5. Insert a fuse of the same type and amperage.
6. Assemble the cap onto the in-line fuse holder.
7. Lower and latch the seat; refer to Tilting the Seat (page 56).

Drive System Maintenance

Checking the Tire Air Pressure

Service Interval: Before each use or daily

Important: **Maintain the recommended pressure in all tires to ensure a good quality of cut and proper machine performance. Do not underinflate the tires.**

1. Prepare the machine for maintenance; refer to Preparing for Maintenance (page 55).
2. Measure the tire air pressure.

   Note: The correct air pressure in the tires is 83 to 103 kPa (12 to 15 psi).
3. If needed add air to or remove air from the tire.
4. Repeat steps 2 and 3 at the other tires.

Checking the Torque of the Wheel Nuts

Service Interval: After the first hour

After the first 10 hours

Every 250 hours

⚠ WARNING

Failure to maintain proper torque of the wheel nuts could result in personal injury.

Maintain the proper torque on the wheel nuts.

1. Prepare the machine for maintenance; refer to Preparing for Maintenance (page 55).
2. Torque the wheel nuts to 94 to 122 N·m (70 to 90 ft-lb).

Adjusting the Traction Drive for Neutral

Important: **The machine must not move when the traction pedal is released (in the NEUTRAL position). If the machine moves, adjust traction pump as follows:**

1. Prepare the machine for maintenance; refer to Preparing for Maintenance (page 55).
2. Jack up the front of the machine until the both front tires are off the ground, and support the machine with jack stands, refer to Specifications

(page 29) and Jacking Point Locations (page 57).

3. From the bottom of the machine and at the right side of the traction pump, loosen the locknut that secures the neutral return-adjustment screw (Figure 136).

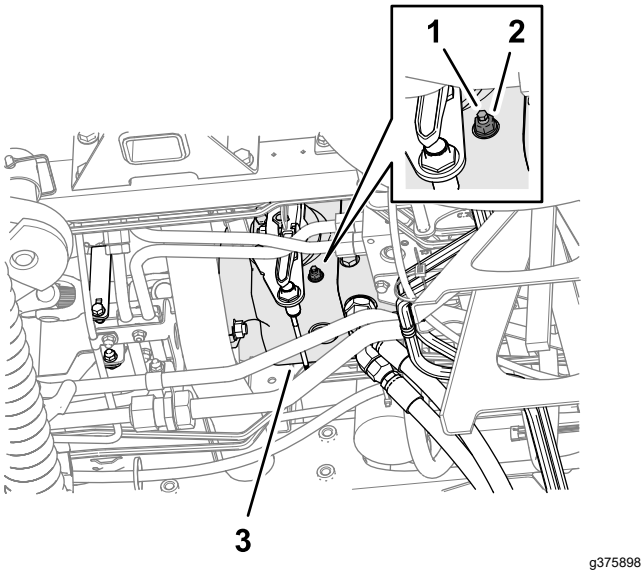

Figure 136

1. Neutral return-adjustment screw
2. Locknut
3. Traction pump

⚠ WARNING

The engine must be running so the final adjustment of the traction adjustment cam can be performed. This could cause personal injury.

Keep hands, feet, face, and other body parts away from the muffler, other hot parts of the engine, and any rotating parts.

4. Start the engine and release the parking brake.
5. Rotate the neutral return-adjustment screw in either direction until the wheels stop rotating.
6. Torque the locknut to 22 N·m (16 ft-lb).
7. Shut off the engine and remove the key.
8. Remove the jack stands, and lower the machine to the ground.
9. Test drive the machine to ensure that it does not move when the traction pedal is in the NEUTRAL position.

Checking the Rear-Wheel Alignment

Service Interval: Every 800 hours—Check the rear wheel toe-in.

1. Rotate the steering wheel to position the rear wheels straight ahead.
2. Prepare the machine for maintenance; refer to Preparing for Maintenance (page 55).
3. At axle height, measure the center-to-center distance at the front and rear of the steering tires.

   Note: The rear wheel toe-in adjustment is correct if the difference between the front wheel measurement and the rear wheel measurement is 6 mm (1/4 inch) or less. (Figure 137).

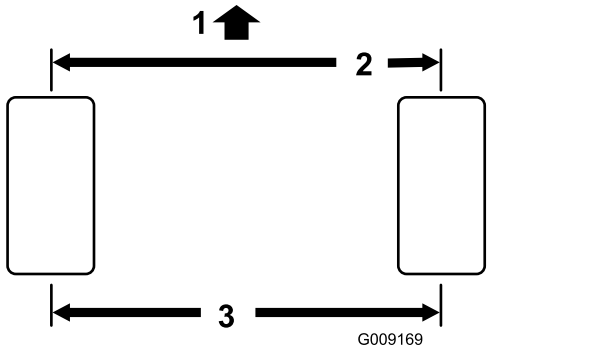

Figure 137

1. Front of the traction unit
2. 6 mm (1/4 inch) or less than the rear of the tire
3. Center-to-center distance

4. If the measurement is greater than 6 mm (1/4 inch), adjust the rear wheel toe-in; refer to Adjusting the Rear Wheel Toe-in (page 70).

Adjusting the Rear Wheel Toe-in

1. Loosen the jam nut on each end of the tie rod (Figure 138).

   Note: The end of the tie rod with the external groove is a left-hand thread.

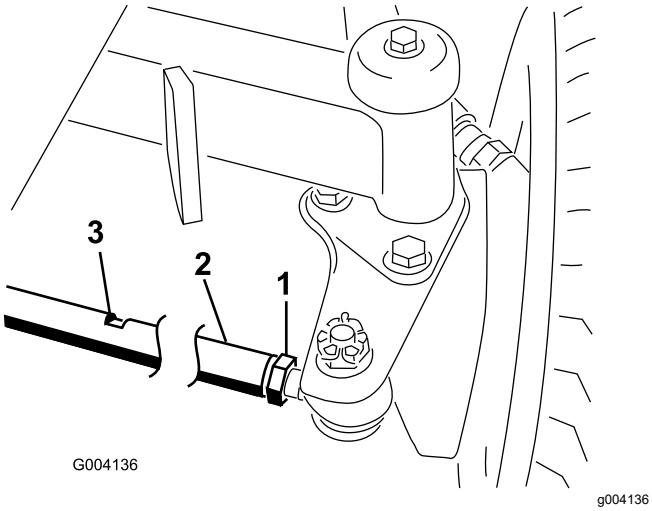

Figure 138

1. Jam nut
2. Tie rod
3. Wrench flat

2. Using the wrench flat to rotate the tie rod.
3. At axle height, measure the center-to-center distance at the front and rear of the steering tires.

   Note: The rear wheel toe-in adjustment is correct if the difference between the front wheel measurement and the rear wheel measurement is 6 mm (1/4 inch) or less.
4. Repeat steps 2 and 3 as required.
5. Tighten the jam nuts.

Cooling System Maintenance

Cooling System Safety

- Swallowing engine coolant can cause poisoning; keep out of reach from children and pets.
- Discharge of hot, pressurized coolant or touching a hot radiator and surrounding parts can cause severe burns.
  - Always allow the engine to cool at least 15 minutes before removing the radiator cap.
  - Use a rag when opening the radiator cap, and open the cap slowly to allow steam to escape.

Coolant Specification

The coolant reservoir is filled at the factory with a 50/50 solution of water and ethylene glycol base extended-life coolant.

Important: **Use only commercially available coolants that meet the specifications listed in the Extended Life Coolant Standards Table.**

Do not use conventional (green) inorganic-acid technology (IAT) coolant in your machine. Do not mix conventional coolant with extended-life coolant.

Coolant Type Table

Ethylene-Glycol Coolant Type	Corrosion Inhibitor Type
Extended-life antifreeze	Organic-acid technology (OAT)

Important: **Do not rely on the color of the coolant to identify the difference between conventional (green) inorganic-acid technology (IAT) coolant and extended-life coolant.**

Coolant manufacturers may dye extended-life coolant in one of the following colors: red, pink, orange, yellow, blue, teal, violet, and green. Use coolant that meets the specifications in the Extended Life Coolant Standards Table.

Extended Life Coolant Standards

ATSM International	SAE International
D3306 and D4985	J1034, J814, and 1941

Important: **Coolant concentration should be a 50/50 mixture of coolant to water.**

- **Preferred:** When mixing coolant from a concentrate, mix it with distilled water.

- **Preferred option:** If distilled water is not available, use a pre-mix coolant instead of a concentrate.
- **Minimum requirement:** If distilled water and pre-mix coolant are not available, mix concentrated coolant with clean drinkable water.

Checking the Coolant Level

⚠ CAUTION

If the engine has been running, the pressurized, hot coolant can escape and cause burns.

- **Do not open the radiator cap when the engine is running.**
- **Use a rag when opening the radiator cap, and open the cap slowly to allow steam to escape.**

Coolant Capacity: 6.6 L (7.0 US qt

1. Prepare the machine for maintenance; refer to Preparing for Maintenance (page 55).
2. Open the hood; refer to Opening the Hood (page 55).
3. Check the level of coolant in the reservoir (Figure 139).

   Note: The coolant level is correct if it is cold mark on the side of the tank when the engine is cold, and the hot mark when the engine is hot.

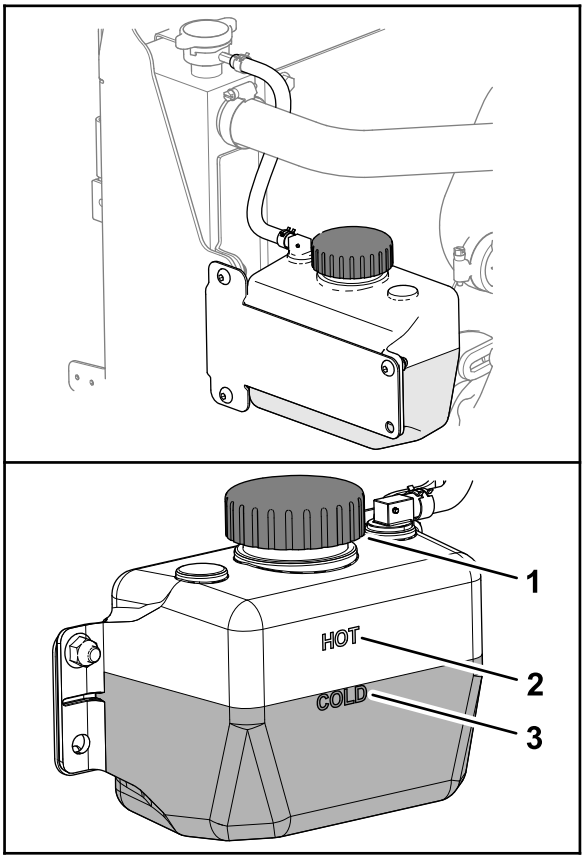

g378285

Figure 139

1. Cap (coolant reservoir)
2. Hot engine-coolant mark
3. Cold engine-coolant mark

4. If the coolant level is low, remove the coolant-reservoir cap and add the specified coolant until the level it is at the cold mark (for a cold engine) or hot mark (for a hot engine).

   Note: Do not overfill the expansion tank with coolant.
5. Install the coolant-reservoir cap.
6. Close and latch the hood; refer to Closing the Hood (page 55).

Removing Debris from the Cooling System

Service Interval: Before each use or daily (More frequently in dirty operating conditions).

Every 100 hours—Inspect the cooling system hoses.

Every 2 years—Flush and replace the cooling system fluid.

1. Prepare the machine for maintenance; refer to Preparing for Maintenance (page 55).

2. Open the hood; refer to Opening the Hood (page 55).
3. Thoroughly clean all debris out of the engine area.
4. Close and latch the hood; refer to Closing the Hood (page 55).
5. Unlatch the rear screen and pivot it open (Figure 140).

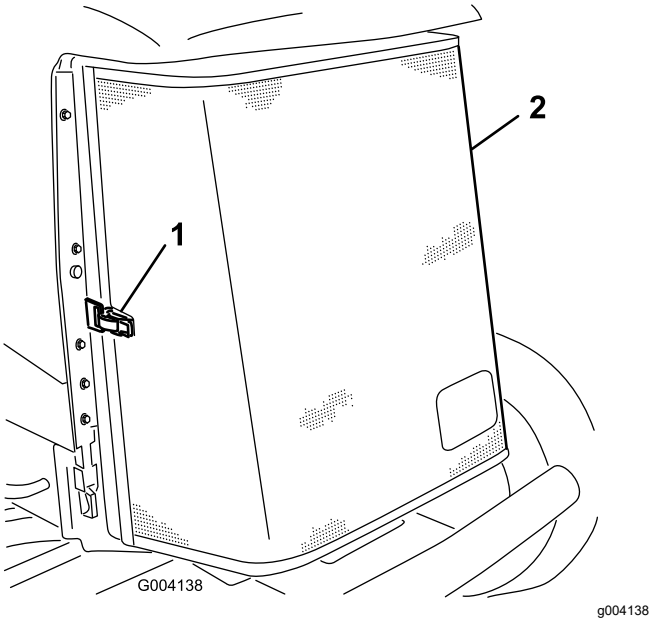

Figure 140

1. Latch
2. Rear screen

6. Thoroughly clean the screen with compressed air.
7. Rotate the 2 oil-cooler latches inward, and tilt oil cooler (Figure 141).

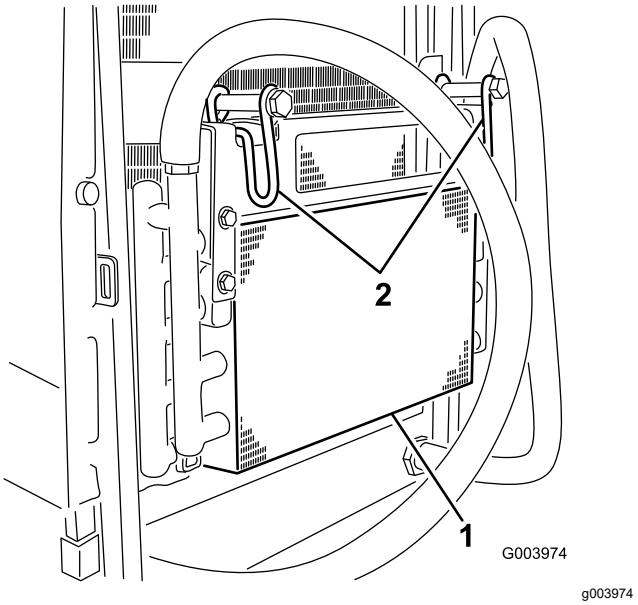

Figure 141

1. Oil cooler
2. Oil-cooler latches

8. Thoroughly clean both sides of the oil cooler and the radiator (Figure 142) with compressed air.

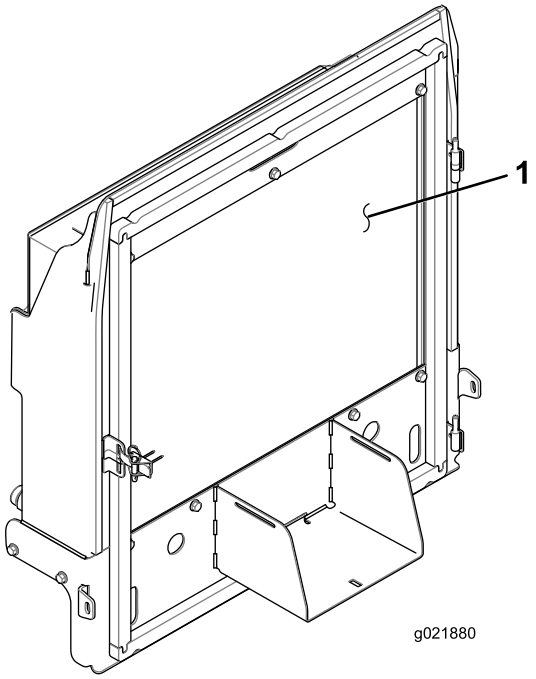

Figure 142

1. Radiator

9. Raise the oil cooler and secure it with the 2 latches.
10. Close and latch the screen.

Brake Maintenance

Adjusting the Parking Brakes

Adjust the service brakes when there is more than 13 mm (1/2 inch) of free travel of the brake pedal, or if the brakes slip. Free travel is the distance the brake pedal moves before you feel braking-pedal resistance.

1. Prepare the machine, refer to Preparing for Maintenance (page 55).
2. Release the parking brake.
3. Use the wheel-motor backlash to rock the drums back and forth to ensure that they are free, prior to and after the adjustment.
4. Lightly press the brake pedal; and measure the distance the pedal moves without resistance (Figure 143).

   Note: Adjust the brakes if there is more than 2.5 cm (1 inch) of free travel (Figure 143) of the brake pedal, or if more parking-brake force is required.

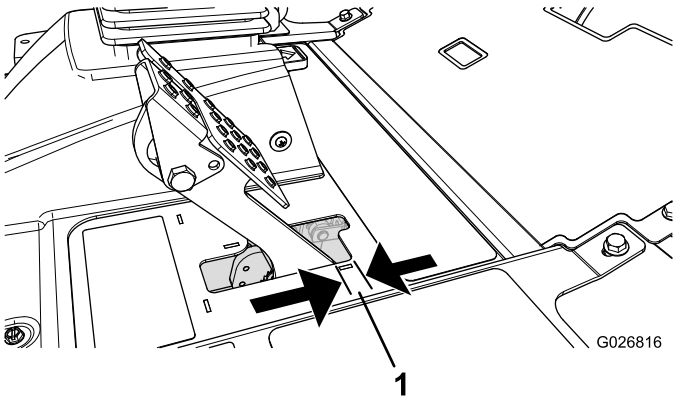

g026816

Figure 143

1. Free travel

5. To reduce brake pedal-free travel, loosen the front jam nuts on the threaded end of each brake cable (Figure 144).

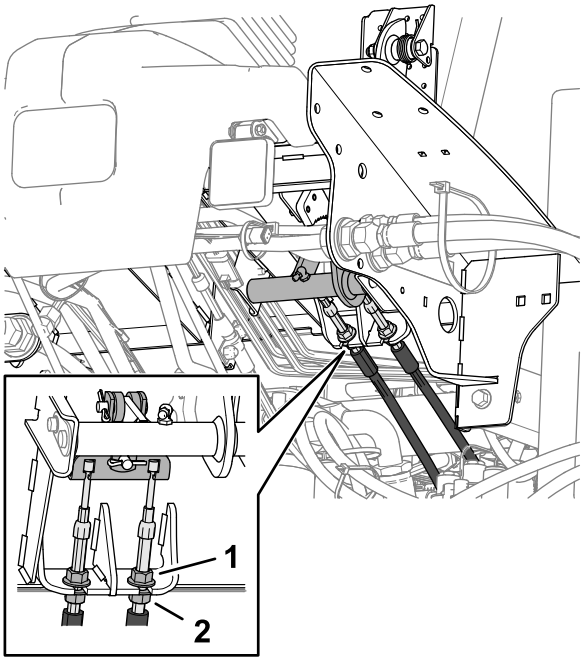

g375942

Figure 144

1. Front jam nut (brake cable) 2. Rear jam nut

6. Tighten the rear nuts to move the cable backward, until brake pedal has 6 to 13 mm (1/4 to 1/2 inch) of free travel (Figure 143), before the parking brake engages the wheels.
7. Tighten the front jam nuts, ensuring that both cables actuate the brakes simultaneously.

   Note: Ensure that the cable conduit does not rotate while tightening the jam nuts.

Adjusting the Parking-Brake Latch

If the parking brake fails to engage and latch, an adjustment to the brake pawl is required.

1. Prepare the machine, refer to Preparing for Maintenance (page 55).
2. Loosen the 2 screws securing the parking-brake pawl to the frame (Figure 145).

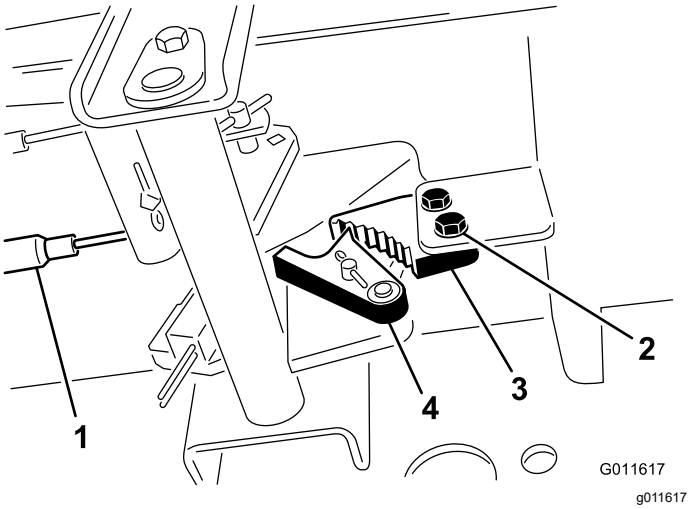

Figure 145

1. Brake cables
2. Screws (2)
3. Parking-brake pawl
4. Brake detent

3. Press the parking-brake pedal forward until the brake detent completely engages on the brake pawl (Figure 145).
4. Tighten the 2 screws locking the adjustment.
5. Press the brake pedal to release the parking brake.
6. Check the adjustment and adjust it as required.

Belt Maintenance

Tensioning the Alternator Belt

Service Interval: After the first 8 hours—Check the condition and tension of the alternator belt.

Every 100 hours—Check the condition and tension of the alternator belt.

1. Prepare the machine for maintenance; refer to Preparing for Maintenance (page 55).
2. Open the hood; refer to Opening the Hood (page 55).
3. Check the tension of the alternator belt by pressing it (Figure 146) midway between the alternator and the crankshaft pulleys with 10 kg (22 lb) of force.

   Note: The belt should deflect 11 mm (7/16 inch). If the deflection is incorrect, proceed to step 4. If belt tension is correct, skip to step 7.

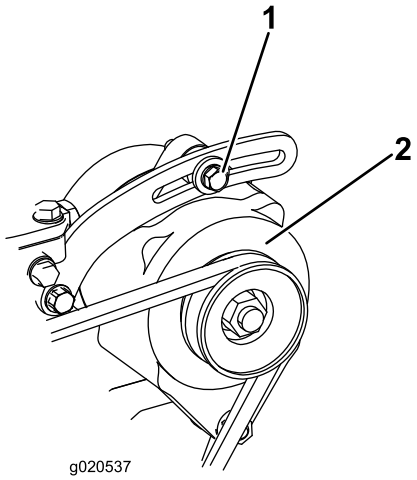

Figure 146

1. Mounting bolt
2. Alternator

4. Loosen the bolt securing the alternator to the brace, and the alternator pivot bolt. (Figure 146)
5. Insert a pry bar between the alternator and the engine and move the alternator outward.
6. When the belt is tensioned as described in step 3, tighten the bolts securing the alternator to the brace, and the alternator pivot bolt.
7. Close and latch the hood; refer to Closing the Hood (page 55).

Hydraulic System Safety

- Seek immediate medical attention if fluid is injected into skin. Injected fluid must be surgically removed within a few hours by a doctor.
- Ensure that all hydraulic-fluid hoses and lines are in good condition and all hydraulic connections and fittings are tight before applying pressure to the hydraulic system.
- Keep your body and hands away from pinhole leaks or nozzles that eject high-pressure hydraulic fluid.
- Use cardboard or paper to find hydraulic leaks.
- Safely relieve all pressure in the hydraulic system before performing any work on the hydraulic system.

Hydraulic Fluid Specifications

The reservoir is filled at the factory with high-quality hydraulic fluid. Check the level of the hydraulic fluid before you first start the engine and daily thereafter; refer to Checking the Hydraulic-Fluid Level (page 76).

Recommended hydraulic fluid: Toro PX Extended Life Hydraulic Fluid; available in 19 L (5 US gallon) pails or 208 L (55 US gallon) drums.

Note: A machine using the recommended replacement fluid requires less frequent fluid and filter changes.

Alternative hydraulic fluids: If Toro PX Extended Life Hydraulic Fluid is not available, you may use another conventional, petroleum-based hydraulic fluid having specifications that fall within the listed range for all the following material properties and that it meets industry standards. Do not use synthetic fluid. Consult with your lubricant distributor to identify a satisfactory product.

Note: Toro does not assume responsibility for damage caused by improper substitutions, so use products only from reputable manufacturers who will stand behind their recommendation.

High Viscosity Index/Low Pour Point Anti-wear Hydraulic Fluid, ISO VG 46

Material Properties:	
Viscosity, ASTM D445	cSt @ 40°C (104°F) 44 to 48
Viscosity Index ASTM D2270	140 or higher
Pour Point, ASTM D97	-37°C to -45°C (-34°F to -49°F)
Industry Specifications:	Eaton Vickers 694 (I-286-S, M-2950-S/35VQ25 or M-2952-S)

High Viscosity Index/Low Pour Point Anti-wear Hydraulic Fluid, ISO VG 46 (cont'd.)

Note: Many hydraulic fluids are almost colorless, making it difficult to spot leaks. A red dye additive for the hydraulic fluid is available in 20 ml (0.67 fl oz) bottles. A bottle is sufficient for 15 to 22 L (4 to 6 US gallons) of hydraulic fluid. Order Part No. 44-2500 from your authorized Toro distributor.

Important: **Toro Premium Synthetic Biodegradable Hydraulic Fluid is the only synthetic biodegradable fluid approved by Toro. This fluid is compatible with the elastomers used in Toro hydraulic systems and is suitable for a wide-range of temperature conditions. This fluid is compatible with conventional mineral oils, but for maximum biodegradability and performance, the hydraulic system should be thoroughly flushed of conventional fluid. The oil is available in 19 L (5 US gallon) pails or 208 L (55 US gallon) drums from your authorized Toro distributor.**

Checking the Hydraulic-Fluid Level

Service Interval: Before each use or daily

The reservoir is filled at the factory with high-quality hydraulic fluid. The best time to check the hydraulic oil is when the fluid is cold. The machine should be in its transport configuration.

1. Prepare the machine for maintenance; refer to Preparing for Maintenance (page 55).
2. Clean the area around the filler neck and the cap of the hydraulic tank (Figure 147).

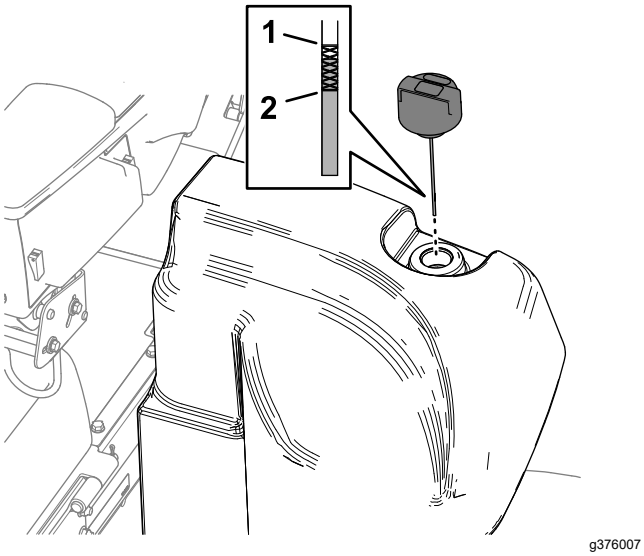

Figure 147

1. Full mark (dipstick)
2. Add mark (dipstick)

3. Remove the cap/dipstick from the filler neck and wipe it with a clean rag.
4. Insert the dipstick into the filler neck; then remove it and check the level of fluid.

   Note: The fluid level should be within operating range on the dipstick.

   Important: **Do not overfill the tank.**
5. If the level is low, add the appropriate amount of fluid to raise the level to the full mark.
6. Install the cap/dipstick onto the filler neck.

Checking the Hydraulic Lines and Hoses

Service Interval: Before each use or daily

Check the hydraulic lines and hoses for leaks, kinked lines, loose mounting supports, wear, loose fittings, weather deterioration, and chemical deterioration. Make all necessary repairs before operating.

Replacing the Hydraulic Filters

Service Interval: Every 1,000 hours—**If you are using the recommended hydraulic fluid,** replace the return-hydraulic filter and charge-hydraulic filter.

Every 800 hours—**If you are not using the recommended hydraulic fluid or have ever filled the reservoir with an alternative fluid,** replace the return-hydraulic filter and charge-hydraulic filter.

Important: **Use of any other filters may void the warranty on some components.**

Changing the Return Filter

The hydraulic system is equipped with a return filter-service indicator (Figure 148). You view the filter-service indicator through the hole in the floor plate. With the engine running at operating temperature, check the color of the indicator as follows:

- Green indicates normal hydraulic-fluid flow through the filter.
- Ref indicates a restricted filter. Change the return filter.

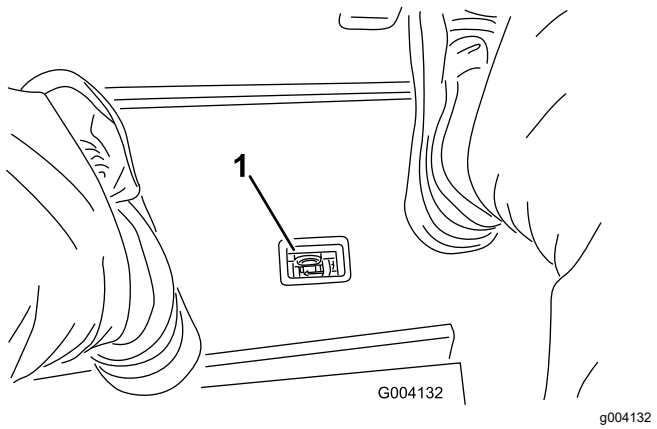

Figure 148

1. Hydraulic-filter-restriction indicator

1. Prepare the machine for maintenance; refer to Preparing for Maintenance (page 55).
2. At the front of the machine, align a drain pan under the return filter (Figure 149).

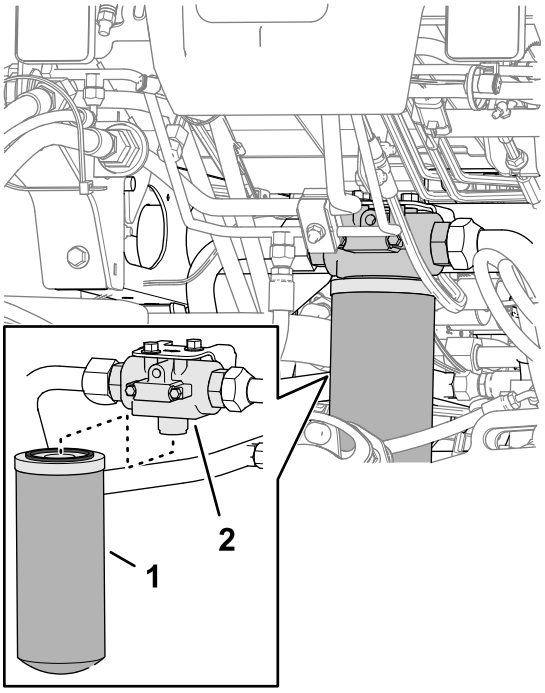

g376340

Figure 149

1. Return filter
2. Filter head

3. Remove the filter.
4. Wipe clean the filter mounting area of the filter head.
5. Apply a thin coat of the specified hydraulic fluid to the gasket of the new return filter.
6. Thread the filter onto the filter head by hand until the gasket contacts the mounting surface, then rotate the filter an additional 1/2 turn.

Changing the Charge Filter

1. Prepare the machine for maintenance; refer to Preparing for Maintenance (page 55).
2. Tilt the seat; refer to Tilting the Seat (page 56).
3. At the left side of the machine, align a drain pan under the charge filter (Figure 150).

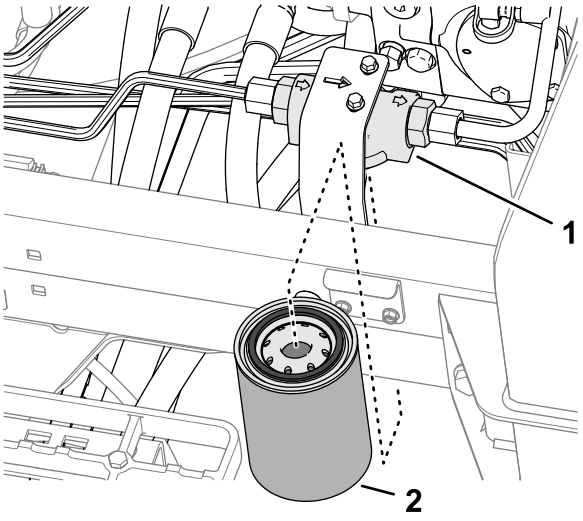

g376339

Figure 150

1. Filter head
2. Charge filter

4. Remove the filter.
5. Wipe clean the filter mounting area of the filter head.
6. Apply a thin coat of the specified hydraulic fluid to the gasket of the new charge filter.
7. Thread the filter onto the filter head by hand until the gasket contacts the mounting surface, then rotate the filter an additional 1/2 turn.
8. Lower and latch the seat; refer to Lowering the Seat (page 56).

Checking for Leaks

1. Start the engine and run it for 2 minutes to purge air from the hydraulic system.
2. Shut off the engine, remove the key, and check for leaks at the return and charge filters.

   Note: Repair all hydraulic leaks.

Hydraulic Fluid Capacity

30 L (8 US gallons); refer to Hydraulic Fluid Specifications (page 76)

Changing the Hydraulic Fluid

Service Interval: Every 2,000 hours—**If you are using the recommended hydraulic fluid,** change the hydraulic fluid.

Every 800 hours—**If you are not using the recommended hydraulic fluid or have ever filled the reservoir with an alternative fluid,** change the hydraulic fluid.

If the fluid becomes contaminated, contact your Toro Distributor because the system must be flushed. Contaminated fluid looks milky or black when compared to clean fluid.

1. Prepare the machine for maintenance; refer to Preparing for Maintenance (page 55).
2. Place a large drain pan under the straight fitting (Figure 151) of the hydraulic tank; refer to Hydraulic Fluid Capacity (page 78).

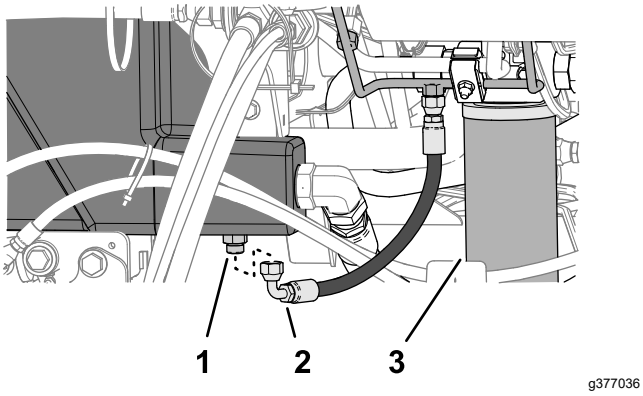

Figure 151

1. Straight fitting (hydraulic tank)
2. Hose (case drain)
3. Return filter

3. Disconnect the case-drain hose from the straight fitting, and allow the tank to drain.
4. When hydraulic fluid stops draining from the tank, install the drain hose.
5. Fill the tank with the specified hydraulic fluid; refer to Hydraulic Fluid Specifications (page 76) and Hydraulic Fluid Capacity (page 78).

   Important: **Use only the hydraulic fluids specified. Other fluids could cause system damage.**
6. Install the tank cap.
7. Start the engine, and use all the hydraulic controls to distribute hydraulic fluid throughout the system.
8. Check for hydraulic-fluid leaks; refer to Checking for Leaks (page 78).
9. Check the level; refer to Checking the Hydraulic-Fluid Level (page 76)

Cutting-Unit System Maintenance

Blade Safety

A worn or damaged blade or bedknife can break, and a piece could be thrown toward you or bystanders, resulting in serious personal injury or death.

- Inspect the blades and bedknives periodically for excessive wear or damage.
- Use care when checking the blades. Wear gloves and use caution when servicing them. Only replace or backlap the blades and bedknives; never straighten or weld them.
- On machines with multiple cutting units, take care when rotating a cutting unit; it can cause the reels in the other cutting units to rotate.

Checking the Reel-to-Bedknife Contact

Service Interval: Before each use or daily

Check the reel-to-bedknife contact, regardless of whether the quality of cut had previously been acceptable. There must be light contact across the full length of the reel and the bedknife (refer to Adjusting the Reel to Bedknife in the cutting unit *Operator's Manual*).

Backlapping the Cutting Units

⚠ WARNING

Contact with the cutting units or other moving parts can result in personal injury.

- **Keep your fingers, hands, and clothing away from the cutting units and other moving parts.**
- **Never attempt to turn the cutting units by hand or foot while the engine is running.**

Note: Additional instructions and procedures on backlapping are available in the Toro Reel Mower Basics (with sharpening guidelines), Form 09168SL.

Preparing the Machine

1. Prepare the machine for maintenance; refer to Preparing for Maintenance (page 55).
2. Press the Enable/Disable switch to DISABLE position.
3. Make initial reel-to-bedknife adjustments appropriate for backlapping on all cutting units which are to be backlapped; refer to the cutting unit *Operator's Manual*.
4. Unlock and raise the seat to expose the mower manifold (Figure 152).

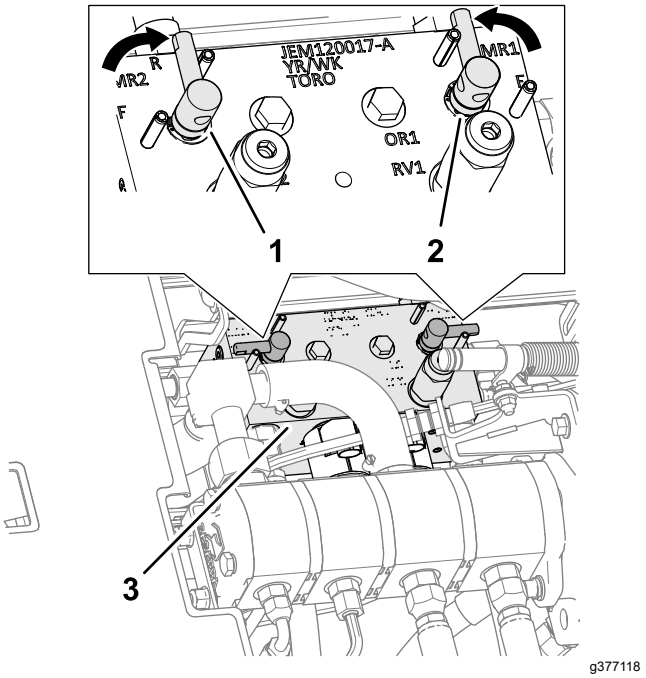

Figure 152

1. Backlap lever (backlap position—front cutting units)
2. Backlap lever (backlap position—rear cutting units)
3. Mower manifold

5. Move the backlap levers to the R (backlap) position (Figure 152).

   Note: Select either the front, rear, or both backlap levers to control which cutting units to backlap. When backlapping, the front cutting units all operate together, and the rear cutting units operate together.

Lapping the Reels and Bedknife

⚠ DANGER

Changing the engine speed while backlapping may cause the reels to stall.

- **Never change the engine speed while backlapping.**
- **Only backlap at idle engine speed.**

1. Start the engine and run at low idle speed.
2. With the Mow/Transport lever in the MOW position, move the Enable/Disable switch to

the ENABLE position. Move the Lower Mow/Lift control forward to start the backlapping operation on the designated reels.

3. Apply lapping compound with a long-handled brush.

⚠ DANGER

Contacting the cutting units when they are moving could cause personal injury.

To avoid personal injury, be certain that you are clear of the cutting units before proceeding.

Important: **Never use a short-handled brush.**

4. If the reels stall or become erratic while backlapping, select a higher reel-speed setting until the speed stabilizes, then return the reel speed to your desired speed.
5. If you need to make an adjustment to the cutting units while backlapping, perform the following steps:
   A. Moving the Lower Mow/Raise lever rearward and press the Enable/Disable switch to DISABLE position.
   B. Shut off the engine and remove the key.
   C. Adjust to the cutting units.
   D. Repeat steps 1 through 3.
6. Repeat steps 3 for the other cutting units that you want to backlap.

Finishing Backlapping

1. Moving the Lower Mow/Raise lever rearward and press the Enable/Disable switch to DISABLE position.
2. Shut off the engine and remove the key.
3. Move the backlap levers to the F (mow) position (Figure 153).

   Important: **If you do not change backlap lever to the F (mow) position after backlapping, the cutting units will not function properly.**

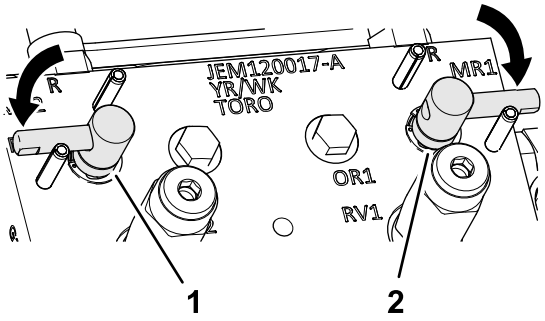

Figure 153

4. Lower and latch the operator's seat; refer to Lowering the Seat (page 56).
5. Wash all lapping compound off from the cutting units.
6. For a better cutting edge, run a file across the front face of the bedknife after lapping.

   Note: This removes any burrs or rough edges that may have built up on the cutting edge.

Chassis Maintenance

Inspecting the Seat Belt

Service Interval: Before each use or daily

1. Inspect the seat belt for wear, cuts, and other damage. Replace the seat belt(s) if any component does not operate properly.
2. Clean the seat belt as necessary.

Extended Maintenance

Chassis and Engine

Service Interval: Every 2 years—Replace the hydraulic hoses.

Every 2 years—Replace the coolant hoses.

Every 2 years—Flush and replace the coolant.

Cleaning

Washing the Machine

Wash the machine as needed using water alone or with a mild detergent. You may use a rag when washing the machine.

Important: **Do not use brackish or reclaimed water to clean the machine.**

Important: **Do not use power-washing equipment to wash the machine. Power-washing equipment may damage the electrical system, loosen important decals, or wash away necessary grease at friction points. Avoid excessive use of water near the control panel, engine, and battery.**

Important: **Do not wash the machine with the engine running. Doing so may result in internal engine damage.**

Storage

Storage Safety

- Before you leave the operator's position, do the following:
  - Park the machine on a level surface.
  - Disengage and lower the cutting units.
  - Engage the parking brake.
  - Shut off the engine and remove the key.
  - Wait for all movement to stop.
  - Allow the machine to cool before adjusting, servicing, cleaning, or storing it.
- Do not store the machine or fuel container where there is an open flame, spark, or pilot light, such as on a water heater or other appliance.

Preparing the Traction Unit

1. Park the machine on a level surface, lower the cutting units, engage the parking brake, shut off the engine, and remove the key.
2. Thoroughly clean the traction unit, cutting units, and the engine.
3. Check the tire pressure; refer to Checking the Tire Air Pressure (page 69).
4. Check all fasteners for looseness; tighten them as necessary.
5. Grease or oil all grease fittings and pivot points. Wipe up any excess lubricant.
6. Lightly sand and use touch-up paint on painted areas that are scratched, chipped, or rusted. Repair any dents in the metal body.
7. Service the battery and cables as follows; refer to Electrical System Safety (page 67):
   A. Remove the battery terminals from the battery posts.
   B. Clean the battery, terminals, and posts with a wire brush and baking-soda solution.
   C. Coat the cable terminals and battery posts with Grafo 112X skin-over grease (Toro Part No. 505-47) or petroleum jelly to prevent corrosion.
   D. Slowly charge the battery every 60 days for 24 hours to prevent lead sulfation of the battery.

Preparing the Engine

1. Drain the engine oil from the oil pan and install the drain plug.
2. Remove and discard the oil filter. Install a new oil filter.
3. Fill the engine with specified motor oil.
4. Start the engine and run it at idle speed for approximately 2 minutes.
5. Shut off the engine and remove the key.
6. Flush the fuel tank with fresh, clean fuel.
7. Secure all fuel-system fittings.
8. Thoroughly clean and service the air-cleaner assembly.
9. Seal the air-cleaner inlet and the exhaust outlet with weatherproof tape.
10. Check the antifreeze protection and add a 50/50 solution of water and ethylene glycol antifreeze as needed for the expected minimum temperature in your area.

Storing the Battery

If you are storing the machine for more than 30 days, remove the battery and charge it fully. Either store it on the shelf or on the machine. Leave the cables disconnected if they are stored on the machine. Store the battery in a cool atmosphere to avoid quick deterioration of the charge in the battery. To prevent the battery from freezing, ensure that it is fully charged. The specific gravity of a fully charged battery is 1.265 to 1.299.

Notes:

EEA/UK Privacy Notice

Toro's Use of Your Personal Information

The Toro Company ("Toro") respects your privacy. When you purchase our products, we may collect certain personal information about you, either directly from you or through your local Toro company or dealer. Toro uses this information to fulfil contractual obligations - such as to register your warranty, process your warranty claim or to contact you in the event of a product recall - and for legitimate business purposes - such as to gauge customer satisfaction, improve our products or provide you with product information which may be of interest. Toro may share your information with our subsidiaries, affiliates, dealers or other business partners in connection these activities. We may also disclose personal information when required by law or in connection with the sale, purchase or merger of a business. We will never sell your personal information to any other company for marketing purposes.

Retention of your Personal Information

Toro will keep your personal information as long as it is relevant for the above purposes and in accordance with legal requirements. For more information about applicable retention periods please contact legal@toro.com.

Toro's Commitment to Security

Your personal information may be processed in the US or another country which may have less strict data protection laws than your country of residence. Whenever we transfer your information outside of your country of residence, we will take legally required steps to ensure that appropriate safeguards are in place to protect your information and to make sure it is treated securely.

Access and Correction

You may have the right to correct or review your personal data, or object to or restrict the processing of your data. To do so, please contact us by email at legal@toro.com. If you have concerns about the way in which Toro has handled your information, we encourage you to raise this directly with us. Please note that European residents have the right to complain to your Data Protection Authority.

California Proposition 65 Warning Information

What is this warning?

You may see a product for sale that has a warning label like the following:



WARNING: Cancer and Reproductive Harm—www.p65Warnings.ca.gov.

What is Prop 65?

Prop 65 applies to any company operating in California, selling products in California, or manufacturing products that may be sold in or brought into California. It mandates that the Governor of California maintain and publish a list of chemicals known to cause cancer, birth defects, and/or other reproductive harm. The list, which is updated annually, includes hundreds of chemicals found in many everyday items. The purpose of Prop 65 is to inform the public about exposure to these chemicals.

Prop 65 does not ban the sale of products containing these chemicals but instead requires warnings on any product, product packaging, or literature with the product. Moreover, a Prop 65 warning does not mean that a product is in violation of any product safety standards or requirements. In fact, the California government has clarified that a Prop 65 warning "is not the same as a regulatory decision that a product is 'safe' or 'unsafe.'" Many of these chemicals have been used in everyday products for years without documented harm. For more information, go to https://oag.ca.gov/prop65/faqs-view-all.

A Prop 65 warning means that a company has either (1) evaluated the exposure and has concluded that it exceeds the "no significant risk level"; or (2) has chosen to provide a warning based on its understanding about the presence of a listed chemical without attempting to evaluate the exposure.

Does this law apply everywhere?

Prop 65 warnings are required under California law only. These warnings are seen throughout California in a wide range of settings, including but not limited to restaurants, grocery stores, hotels, schools, and hospitals, and on a wide variety of products. Additionally, some online and mail order retailers provide Prop 65 warnings on their websites or in catalogs.

How do the California warnings compare to federal limits?

Prop 65 standards are often more stringent than federal and international standards. There are various substances that require a Prop 65 warning at levels that are far lower than federal action limits. For example, the Prop 65 standard for warnings for lead is 0.5 µg/day, which is well below the federal and international standards.

Why don't all similar products carry the warning?

- Products sold in California require Prop 65 labelling while similar products sold elsewhere do not.
- A company involved in a Prop 65 lawsuit reaching a settlement may be required to use Prop 65 warnings for its products, but other companies making similar products may have no such requirement.
- The enforcement of Prop 65 is inconsistent.
- Companies may elect not to provide warnings because they conclude that they are not required to do so under Prop 65; a lack of warnings for a product does not mean that the product is free of listed chemicals at similar levels.

Why does Toro include this warning?

Toro has chosen to provide consumers with as much information as possible so that they can make informed decisions about the products they buy and use. Toro provides warnings in certain cases based on its knowledge of the presence of one or more listed chemicals without evaluating the level of exposure, as not all the listed chemicals provide exposure limit requirements. While the exposure from Toro products may be negligible or well within the "no significant risk" range, out of an abundance of caution, Toro has elected to provide the Prop 65 warnings. Moreover, if Toro does not provide these warnings, it could be sued by the State of California or by private parties seeking to enforce Prop 65 and subject to substantial penalties.

The Toro Warranty

Two-Year or 1,500 Hours Limited Warranty

Conditions and Products Covered

The Toro Company warrants your Toro Commercial product (“Product”) to be free from defects in materials or workmanship for 2 years or 1,500 operational hours*, whichever occurs first. This warranty is applicable to all products with the exception of Aerators (refer to separate warranty statements for these products). Where a warrantable condition exists, we will repair the Product at no cost to you including diagnostics, labor, parts, and transportation. This warranty begins on the date the Product is delivered to the original retail purchaser.
* Product equipped with an hour meter.

Instructions for Obtaining Warranty Service

You are responsible for notifying the Commercial Products Distributor or Authorized Commercial Products Dealer from whom you purchased the Product as soon as you believe a warrantable condition exists. If you need help locating a Commercial Products Distributor or Authorized Dealer, or if you have questions regarding your warranty rights or responsibilities, you may contact us at:

Toro Commercial Products Service Department
8111 Lyndale Avenue South
Bloomington, MN 55420-1196

952–888–8801 or 800–952–2740
E-mail: commercial.warranty@toro.com

Owner Responsibilities

As the product owner, you are responsible for required maintenance and adjustments stated in your *Operator's Manual*. Repairs for product issues caused by failure to perform required maintenance and adjustments are not covered under this warranty.

Items and Conditions Not Covered

Not all product failures or malfunctions that occur during the warranty period are defects in materials or workmanship. This warranty does not cover the following:

- Product failures which result from the use of non-Toro replacement parts, or from installation and use of add-on, or modified non-Toro branded accessories and products.
- Product failures which result from failure to perform recommended maintenance and/or adjustments.
- Product failures which result from operating the Product in an abusive, negligent, or reckless manner.
- Parts consumed through use that are not defective. Examples of parts which are consumed, or used up, during normal Product operation include, but are not limited to, brake pads and linings, clutch linings, blades, reels, rollers and bearings (sealed or greasable), bed knives, spark plugs, castor wheels and bearings, tires, filters, belts, and certain sprayer components such as diaphragms, nozzles, flow meters, and check valves.
- Failures caused by outside influence, including, but not limited to, weather, storage practices, contamination, use of unapproved fuels, coolants, lubricants, additives, fertilizers, water, or chemicals.
- Failure or performance issues due to the use of fuels (e.g. gasoline, diesel, or biodiesel) that do not conform to their respective industry standards.
- Normal noise, vibration, wear and tear, and deterioration. Normal “wear and tear” includes, but is not limited to, damage to seats due to wear or abrasion, worn painted surfaces, scratched decals or windows.

Parts

Parts scheduled for replacement as required maintenance are warranted for the period of time up to the scheduled replacement time for that part. Parts replaced under this warranty are covered for the duration of the original product warranty and become the property of Toro. Toro will make the final decision whether to repair any existing part or assembly or replace it. Toro may use remanufactured parts for warranty repairs.

Deep Cycle and Lithium-Ion Battery Warranty

Deep cycle and Lithium-Ion batteries have a specified total number of kilowatt-hours they can deliver during their lifetime. Operating, recharging, and maintenance techniques can extend or reduce total battery life. As the batteries in this product are consumed, the amount of useful work between charging intervals will slowly decrease until the battery is completely worn out. Replacement of worn out batteries, due to normal consumption, is the responsibility of the product owner. Note: (Lithium-Ion battery only): Refer to the battery warranty for additional information.

Lifetime Crankshaft Warranty (ProStripe 02657 Model Only)

The Prostripe which is fitted with a genuine Toro Friction Disc and Crank-Safe Blade Brake Clutch (integrated Blade Brake Clutch (BBC) + Friction Disc assembly) as original equipment and used by the original purchaser in accordance with recommended operating and maintenance procedures, are covered by a Lifetime Warranty against engine crankshaft bending. Machines fitted with friction washers, Blade Brake Clutch (BBC) units and other such devices are not covered by the Lifetime Crankshaft Warranty.

Maintenance is at Owner’s Expense

Engine tune-up, lubrication, cleaning and polishing, replacement of filters, coolant, and completing recommended maintenance are some of the normal services Toro products require that are at the owner’s expense.

General Conditions

Repair by an Authorized Toro Distributor or Dealer is your sole remedy under this warranty.

The Toro Company is not liable for indirect, incidental or consequential damages in connection with the use of the Toro Products covered by this warranty, including any cost or expense of providing substitute equipment or service during reasonable periods of malfunction or non-use pending completion of repairs under this warranty. Except for the Emissions warranty referenced below, if applicable, there is no other express warranty. All implied warranties of merchantability and fitness for use are limited to the duration of this express warranty.

Some states do not allow exclusions of incidental or consequential damages, or limitations on how long an implied warranty lasts, so the above exclusions and limitations may not apply to you. This warranty gives you specific legal rights, and you may also have other rights which vary from state to state.

Note Regarding Emissions Warranty

The Emissions Control System on your Product may be covered by a separate warranty meeting requirements established by the U.S. Environmental Protection Agency (EPA) and/or the California Air Resources Board (CARB). The hour limitations set forth above do not apply to the Emissions Control System Warranty. Refer to the Engine Emission Control Warranty Statement supplied with your product or contained in the engine manufacturer’s documentation.

Countries Other than the United States or Canada

Customers who have purchased Toro products exported from the United States or Canada should contact their Toro Distributor (Dealer) to obtain guarantee policies for your country, province, or state. If for any reason you are dissatisfied with your Distributor's service or have difficulty obtaining guarantee information, contact your Authorized Toro Service Center.