Form No. 3358-616 Rev F

TORO®

Count on it.

Parts Catalog

ProCore® 1298 Aerator

Model No. 09716—Serial No. 280000001 and Up

Register at www.Toro.com.
Original Instructions (EN)

CE

3358-616 F

Ordering Replacement Parts

To order replacement parts, please supply the part number, the quantity, and the description of each part desired.

Understanding Reference Numbers

Each identified part in an illustration has a reference number. The reference number for a part also appears in the parts list, along with other information about the part.

This catalog uses two special reference number formats, one to indicate parts in a service assembly and another to indicate the quantity of a given part in an illustration.

Service Assembly Reference Numbers

Parts in service assemblies have reference numbers in the form a:b. The a represents the reference number of the entire service assembly and the b represents a sequential number unique to each part within the service assembly.

For example, a wheel assembly might be identified by reference number 6, the tire by 6:1, the valve by 6:2, and the wheel by 6:3. When you order the assembly identified by reference number 6, you receive all parts identified by reference numbers 6:1,6:2, and 6:3. However, you may also order any part individually. Reference numbers of this type appear in illustration and in parts lists.

Reference Numbers Indicating Quantity

In an illustration, if a reference number indicates more than one part, the reference number has the form nX y. The n represents the quantity of the part, the X is the multiplication symbol, and the y represents the reference number.

For example, in an illustration, the reference number 2X 37 means that two of the parts identified by reference number 37 are indicated.

Contents

Frame Assembly . . . 4
Gearbox and Driveline Assembly . . . 5
Shielded Drive Shaft Assembly No. 110-4283 . . . 6
Gearbox Assembly No. 110-4565 . . . 7
Drive Shaft Assembly No. 110-4586 . . . 8
Right Hand Roller and Scraper Assembly . . . 9
Left Hand Roller and Scraper Assembly . . . 10
Right Hand Belt Drive Assembly . . . 11
Left Hand Belt Drive Assembly . . . 12
Right Hand H-Frame Assembly . . . 13
Depth Control Assembly No. 110-4502 . . . 14
Left Hand H-Frame Assembly . . . 15
Right Hand No. 1 and No. 2 Crankarm Assembly . . . 16
Right Hand No. 3 and No. 4 Crankarm Assembly . . . 17
Right Hand No. 5 and No. 6 Crankarm Assembly . . . 18
Left Hand No. 1 and No. 2 Crankarm Assembly . . . 19
Left Hand No. 3 and No. 4 Crankarm Assembly . . . 20
Left Hand No. 5 and No. 6 Crankarm Assembly . . . 21
Roto-Link Damper Assembly . . . 22
Right Hand Turf Guard Assembly . . . 23
Left Hand Turf Guard Assembly . . . 24
Right Hand Front Cover Assembly . . . 25
Left Hand Front Cover Assembly . . . 26
Right Hand Rear Cover Assembly . . . 27
Left Hand Rear Cover Assembly . . . 28
Storage Stand Assembly . . . 29
Cover Latch Assembly . . . 30
Attachments and Accessories . . . 31

© 2023—The Toro® Company
8111 Lyndale Avenue South
Bloomington, MN 55420

Contact us at www.Toro.com.
Printed in the USA.
All Rights Reserved

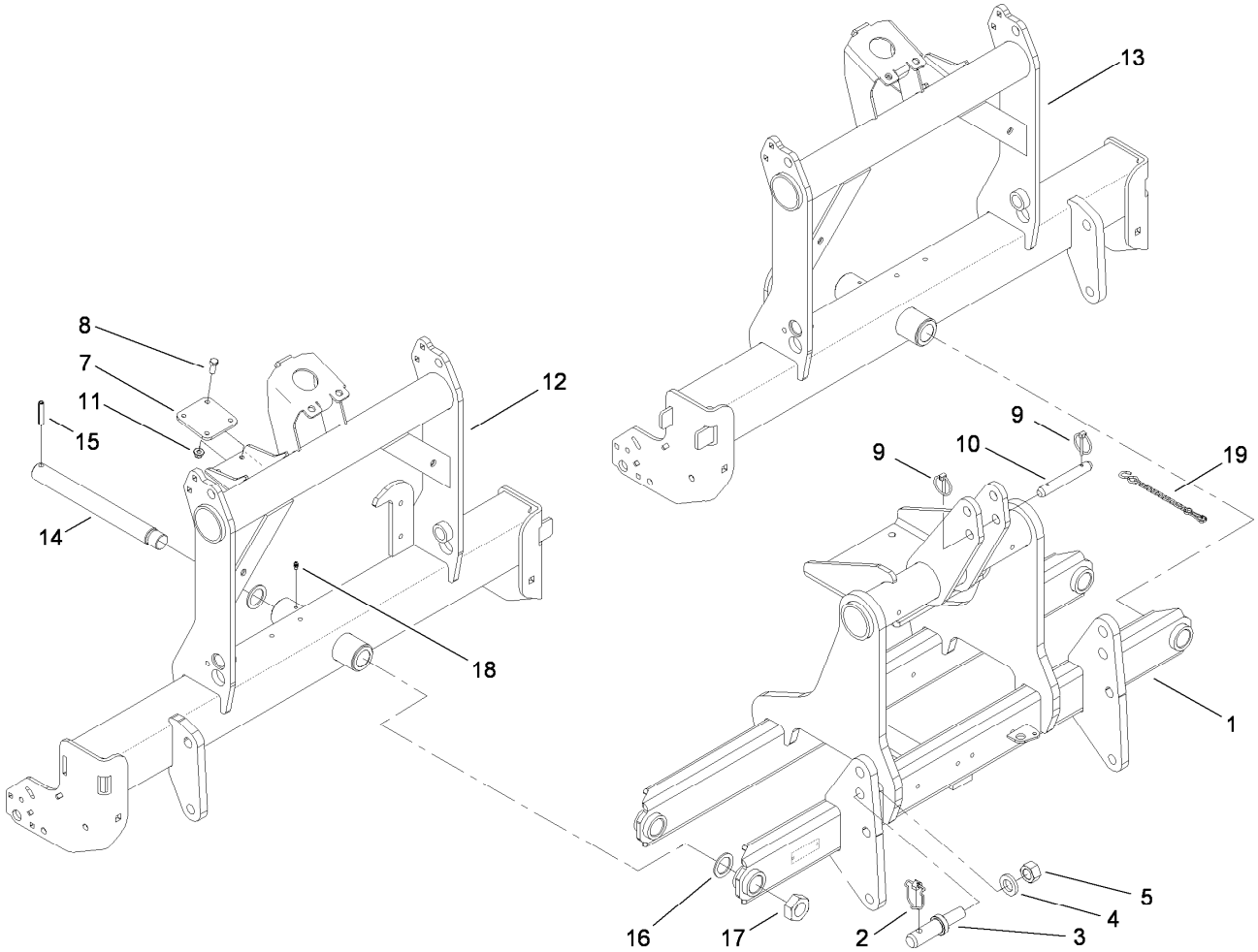

Frame Assembly

Ref.	Part Number	Qty.	Description
1	110-4202-03	1	Mast-Hitch, 3-Point
2	3290-384	2	Pin-Lynch
3	110-4314	2	Pin-Link, Cat 2
4	104-8322	2	Washer-Hardened
5	3219-18	2	Nut-Hex
7	110-4440	2	Pad
8	3234-17	8	Screw-HHF
9	92-1298	2	Pin-Lynch
10	92-1233	1	Pin-Clevis
11	104-8300	8	Nut-HF, NI
12	110-4209-01	1	RH Subframe ASM
13	110-4210-01	1	LH Subframe ASM
14	71-2590	2	Shaft-Pivot
15	32121-110	2	Pin-Roll, Slotted
16	256-304	4	Washer-Thrust
17	3296-68	2	Nut-Lock, NI
18	302-5	2	Fitting-Grease
19	110-4679	1	Chain-Storage, Driveline

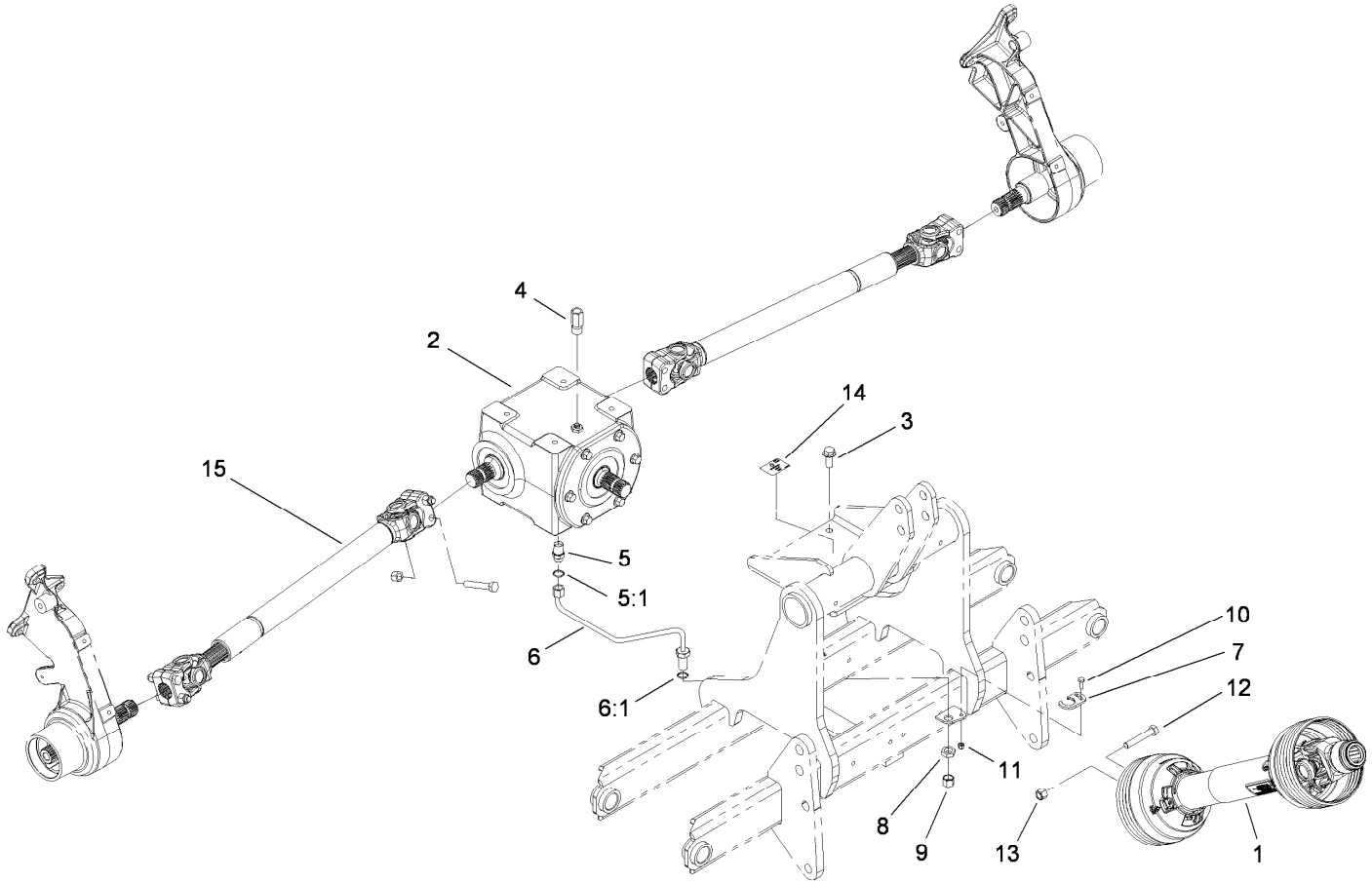

Gearbox and Driveline Assembly

Ref.	*Part Number*	*Qty.*	*Description*
1	110-4283	1	Shielded Driveshaft ASM
2	110-4565	1	Gearbox-T
3	3234-38	4	Screw-HHF
4	110-4590	1	Fitting-Reducer
5	340-124	1	Adapter
5:1	237-22	1	O-Ring
6	110-4336	1	Tube ASM
6:1	237-22	1	O-Ring
7	110-4553	1	Keeper-Hardline
8	340-70	1	Nut-Lock
9	340-117	1	Cap
10	3229-1	1	Screw-CARR
11	3296-42	1	Nut-Lock, NI
12	325-12	9	Screw-HH
13	3296-23	9	Nut-Lock, NI
14	110-4665	1	Decal-Service, Oil
15	110-4586	2	Drive Shaft ASM

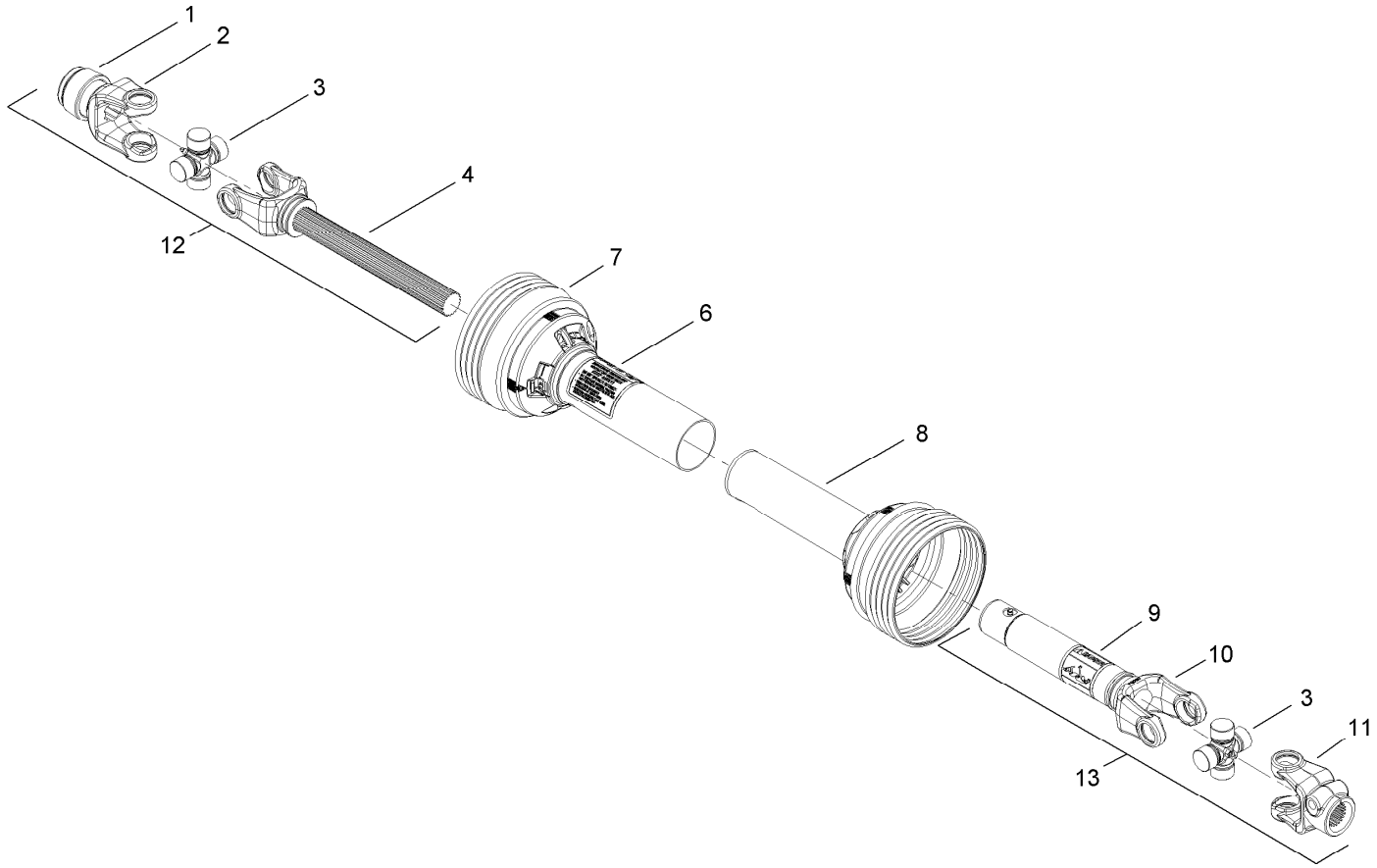

Shielded Drive Shaft Assembly No. 110-4283

Ref.	*Part Number*	*Qty.*	*Description*
1	93-4636	1	Auto-Lok Repair Kit
2		1	Safety Slide Lock Yoke ASM ■
3	110-4635	2	Cross And Bearing Kit
4		1	Yoke And Shaft ■
5	110-4636	2	Guard Repair Kit ●
6	92-1581	1	Decal-Safety
7	110-4637	1	Guard-Outer
8	110-4638	1	Guard-Inner
9	92-1582	1	Decal-Safety
10		1	Yoke And Tube ■
11		1	Yoke ■
12	110-4633	1	Joint And Shaft Half ASM
13	110-4634	1	Joint And Tube Half ASM

● Not illustrated

■ Not serviced separately

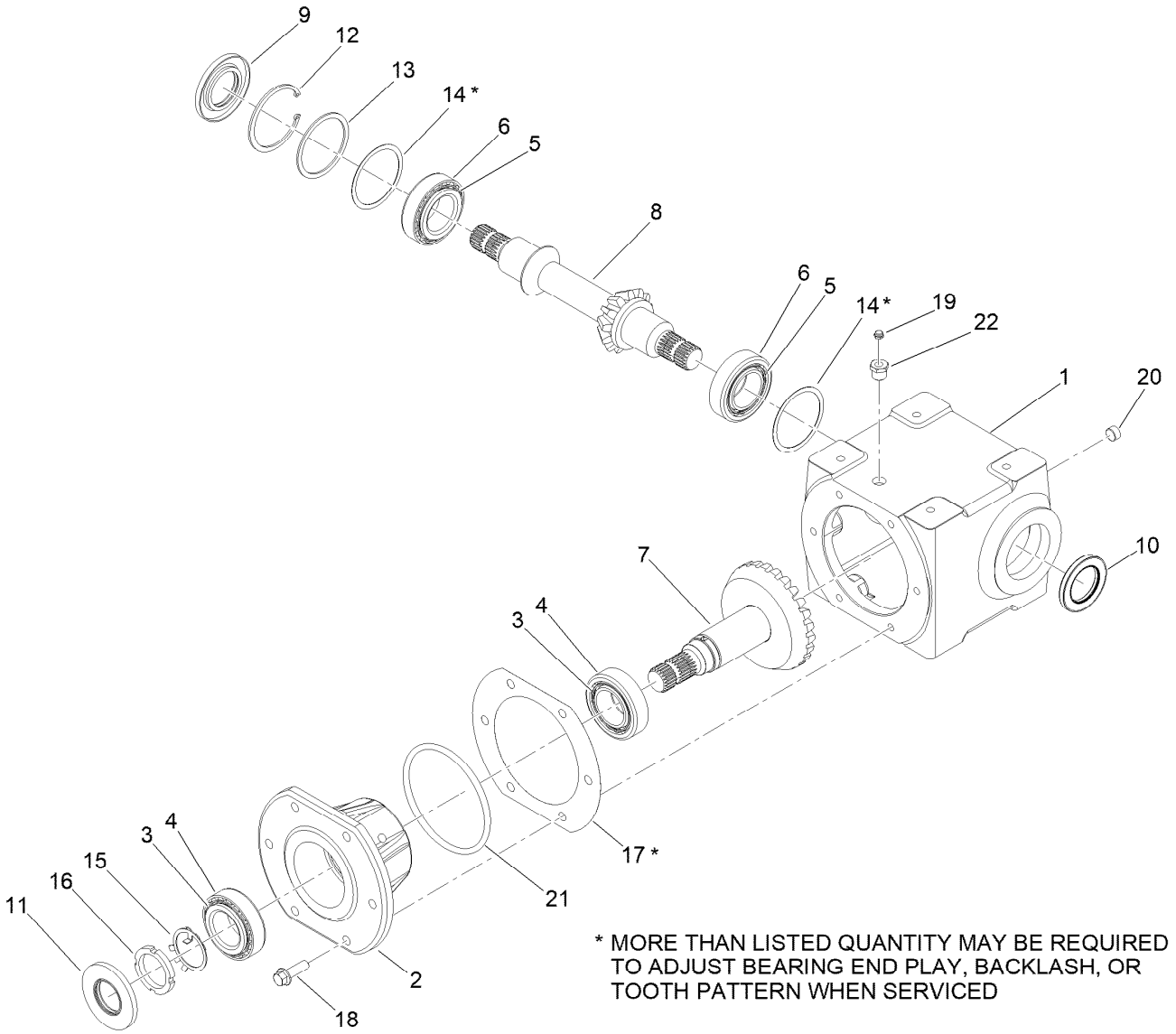

Gearbox Assembly No. 110-4565

Ref.	Part Number	Qty.	Description
1	110-4644	1	Housing
2	110-4645	1	Quill
3	110-4646	2	Cone-Bearing
4	110-4647	2	Cup-Bearing
5	110-4648	2	Cone-Bearing
6	110-4649	2	Cup-Bearing
7	110-4650	1	Gear And Shaft ASM
8	110-4651	1	Shaft-Cross
9	110-4652	1	Seal-Viton
10	110-4653	1	Seal-Viton
11	110-4654	1	Seal-Viton

Ref.	Part Number	Qty.	Description
12	110-4655	1	Ring-Retaining
13	110-4656	1	Shim-Hard
14	110-4657	2	Shim-Soft
15	110-4658	1	Shim-Retaining
16	110-4659	1	Nut-Lock
17	110-4660	1	Gasket
18	33106-045	6	Screw-HHF
19	110-4661	1	Vent-Relief
20	281-3	1	Plug-Pipe, SQH
21	110-4662	1	O-Ring
22	140-2251	1	Adapter

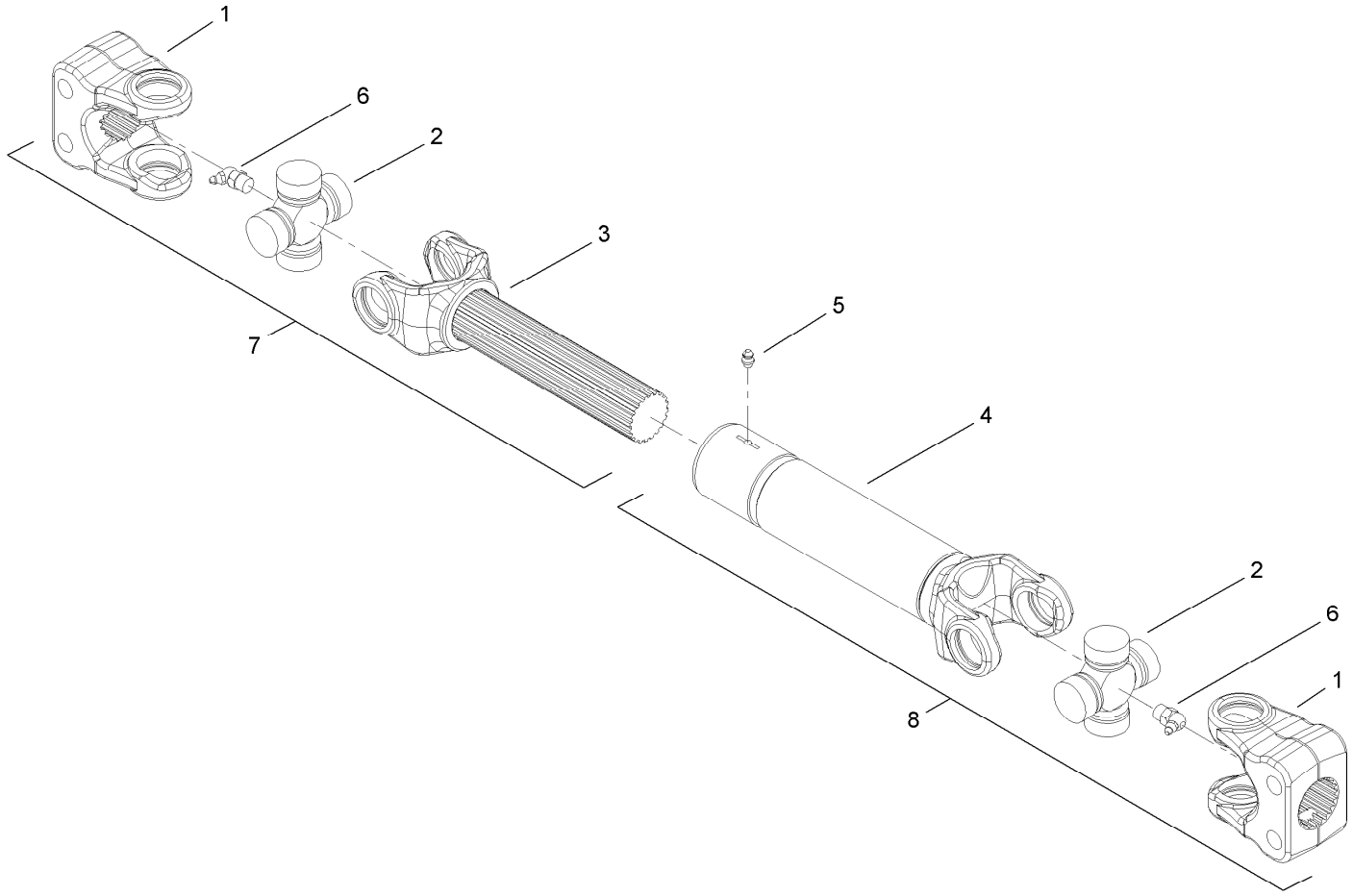

Drive Shaft Assembly No. 110-4586

Ref.	*Part Number*	*Qty.*	*Description*
1		1	Yoke ●
2	110-4641	2	Cross And Bearing Kit
3		1	Yoke And Shaft ASM ●
4		1	Yoke And Tube ASM ●
5		1	Zerk-Grease ●
6		2	Zerk-Grease ●
7	110-4642	1	Joint And Shaft Half ASM
8	110-4643	1	Joint And Tube Half ASM

● Not serviced separately

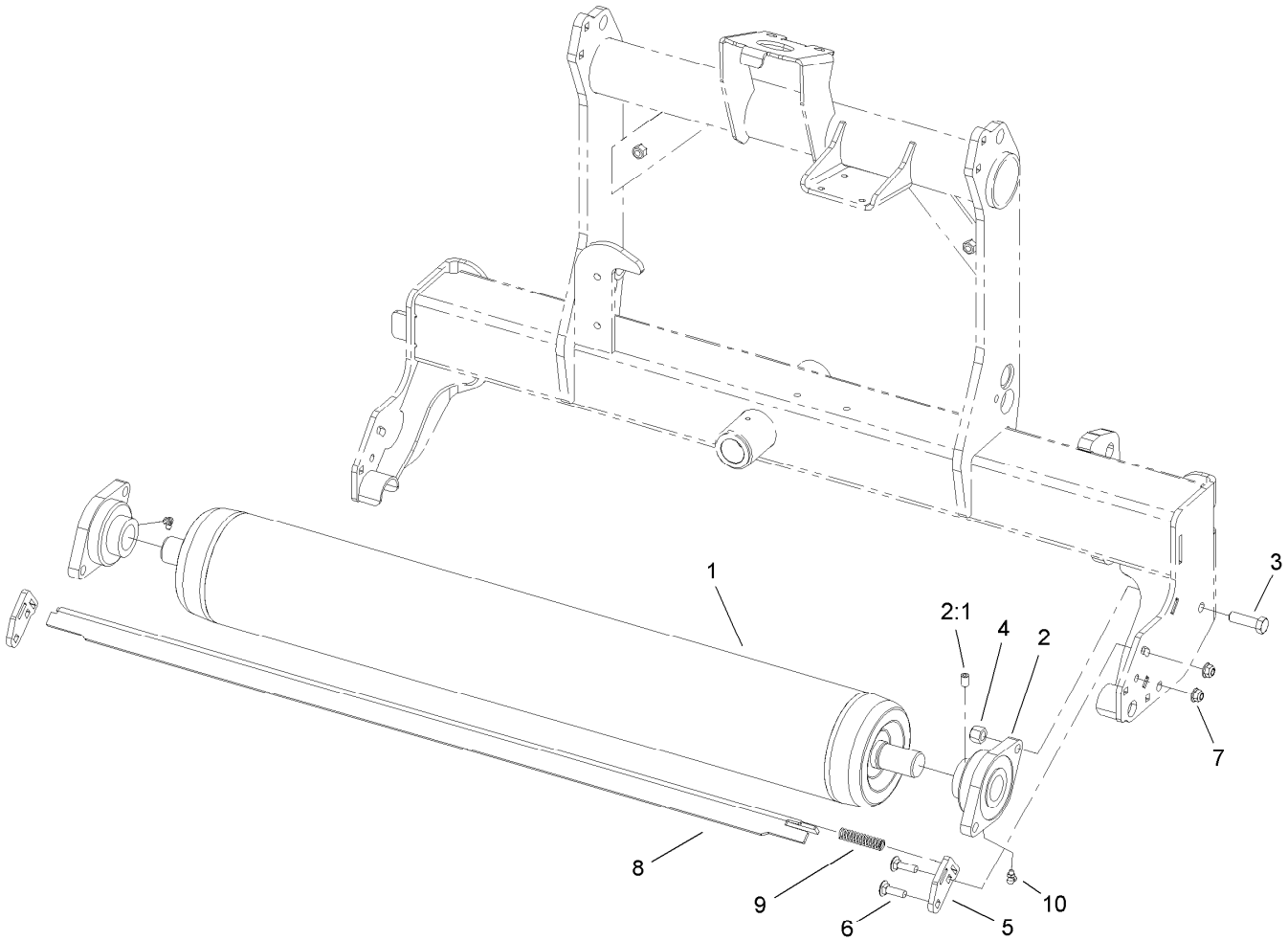

Right Hand Roller and Scraper Assembly

Ref.	*Part Number*	*Qty.*	*Description*
1	110-4253-03	1	Roller
2	105-0962	2	Bearing-Mount, Flange
2:1	3246-17	1	Setscrew-HSH
3	325-7	4	Screw-HH
4	3296-23	4	Nut-Lock, NI
5	110-4290	2	Arm-Scraper
6	3231-25	4	Bolt-CARR
7	104-8301	4	Nut-HF, NI
8	110-4289-03	1	Scraper-Roller
9	108-4469	1	Spring-Compression
10	302-40	2	Fitting-Grease, 90 DEG

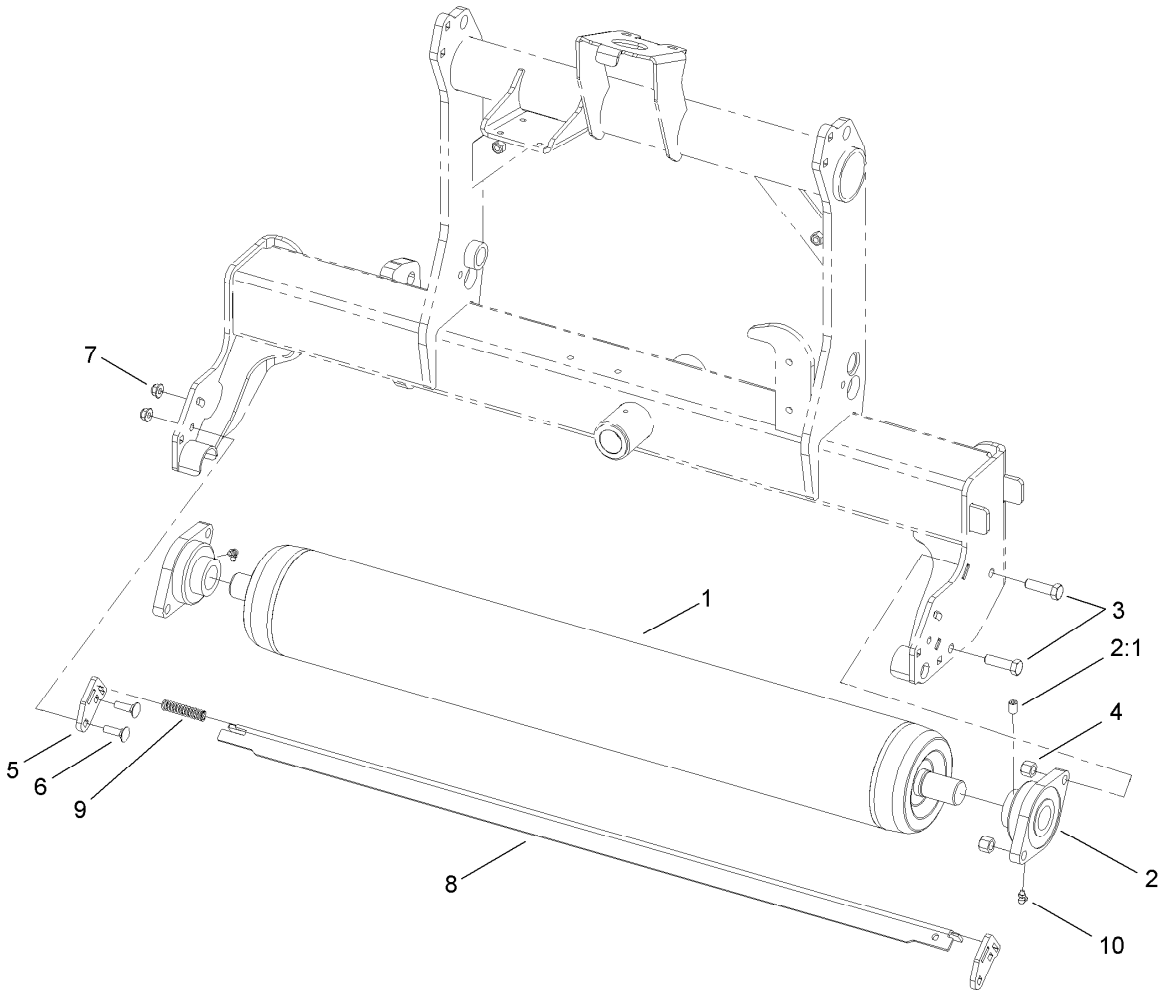

Left Hand Roller and Scraper Assembly

Ref.	*Part Number*	*Qty.*	*Description*
1	110-4253-03	1	Roller
2	105-0962	2	Bearing-Mount, Flange
2:1	3246-17	1	Setscrew-HSH
3	325-7	4	Screw-HH
4	3296-23	4	Nut-Lock, NI
5	110-4290	2	Arm-Scraper
6	3231-25	4	Bolt-CARR
7	104-8301	4	Nut-HF, NI
8	110-4289-03	1	Scraper-Roller
9	108-4469	1	Spring-Compression
10	302-40	2	Fitting-Grease, 90 DEG

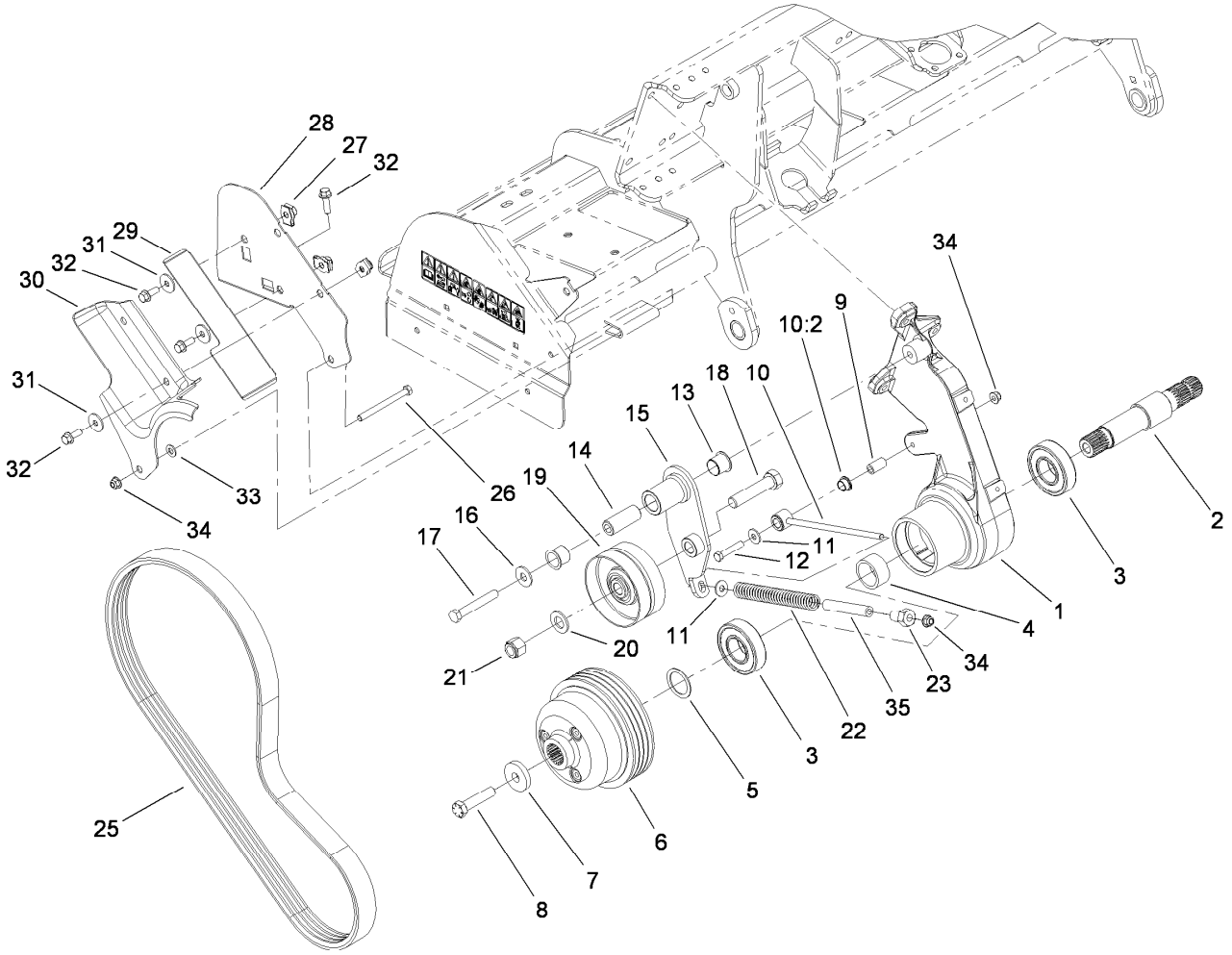

Right Hand Belt Drive Assembly

Ref.	Part Number	Qty.	Description
1	110-4445	1	Support-Pulley, RH
2	110-4527	1	Shaft-Pulley, Splined
3	106-8871	2	Bearing-Ball
4	110-4460	1	Spacer-Bearing
5	110-4498	1	Washer-Shim
6	110-4419	1	Pulley
7	105-1016	1	Washer-Hardened
8	110-4614	1	Screw-HH
9	110-4631	1	Tube-Spacer
10	110-4669	1	Idler Arm ASM
10:2	80-1290	2	Bushing
11	80-6990	2	Washer-Hardened
12	323-10	1	Screw-HH
13	99-3631	2	Bushing-Flange
14	105-0945	1	Sleeve-Pivot
15	110-4624-03	1	Arm-Idler, RH
16	3256-6	1	Washer-Flat
17	325-14	1	Screw-HH

Ref.	Part Number	Qty.	Description
18	328-5	1	Screw-HH
19	100-7631	1	Pulley-Idler
20	3256-28	1	Washer-Flat
21	3296-51	1	Nut-Lock, NI
22	110-4632	1	Spring-Compression
23	110-4676	1	Nut-Idler
25	110-4327	1	Belt-Banded, 4 Groove
26	323-17	1	Screw-HH
27	105-4886	4	Nut-Tinnerman
28	110-4476-03	1	Support-Guard, Belt
29	114-1463-03	1	Shield-Dirt, RH
30	110-4474	1	Guard-Belt, RH
31	93-8806	4	Washer-Hardened
32	3234-24	6	Screw-HHF
33	3256-24	1	Washer-Flat
34	104-8301	3	Nut-HF, NI
35	115-2800	1	Hose

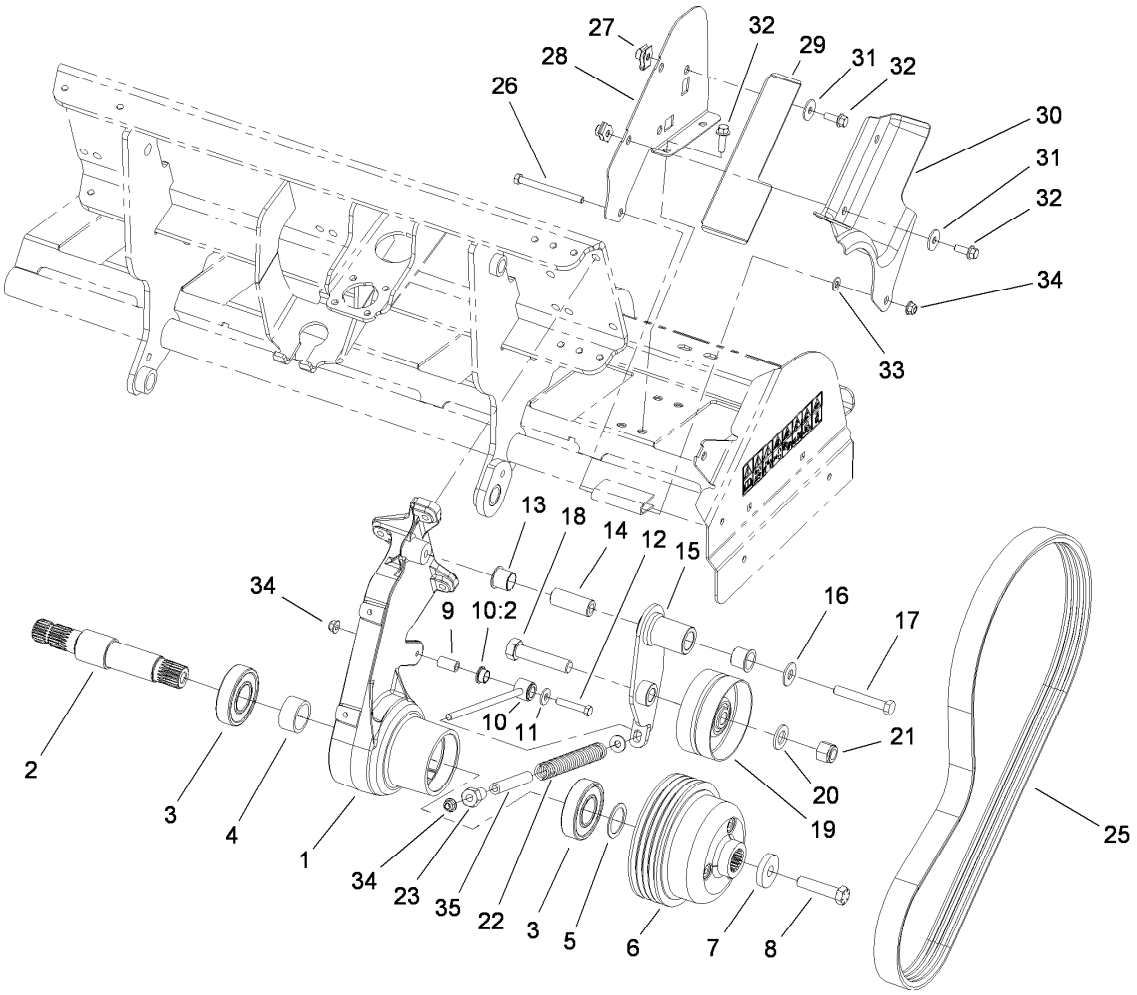

Left Hand Belt Drive Assembly

Ref.	Part Number	Qty.	Description
1	110-4447	1	Support-Pulley, LH
2	110-4527	1	Shaft-Pulley, Splined
3	106-8871	2	Bearing-Ball
4	110-4460	1	Spacer-Bearing
5	110-4498	1	Washer-Shim
6	110-4419	1	Pulley
7	105-1016	1	Washer-Hardened
8	110-4614	1	Screw-HH
9	110-4631	1	Tube-Spacer
10	110-4669	1	Idler Arm ASM
10:2	80-1290	2	Bushing
11	80-6990	2	Washer-Hardened
12	323-10	1	Screw-HH
13	99-3631	2	Bushing-Flange
14	105-0945	1	Sleeve-Pivot
15	110-4625-03	1	Arm-Idler, LH
16	3256-6	1	Washer-Flat
17	325-14	1	Screw-HH

Ref.	Part Number	Qty.	Description
18	328-5	1	Screw-HH
19	100-7631	1	Pulley-Idler
20	3256-28	1	Washer-Flat
21	3296-51	1	Nut-Lock, NI
22	110-4632	1	Spring-Compression
23	110-4676	1	Nut-Idler
25	110-4327	1	Belt-Banded, 4 Groove
26	323-17	1	Screw-HH
27	105-4886	4	Nut-Tinnerman
28	110-4476-03	1	Support-Guard, Belt
29	114-1464-03	1	Shield-Dirt, LH
30	110-4475	1	Guard-Belt, LH
31	93-8806	4	Washer-Hardened
32	3234-24	6	Screw-HHF
33	3256-24	1	Washer-Flat
34	104-8301	3	Nut-HF, NI
35	115-2800	1	Hose

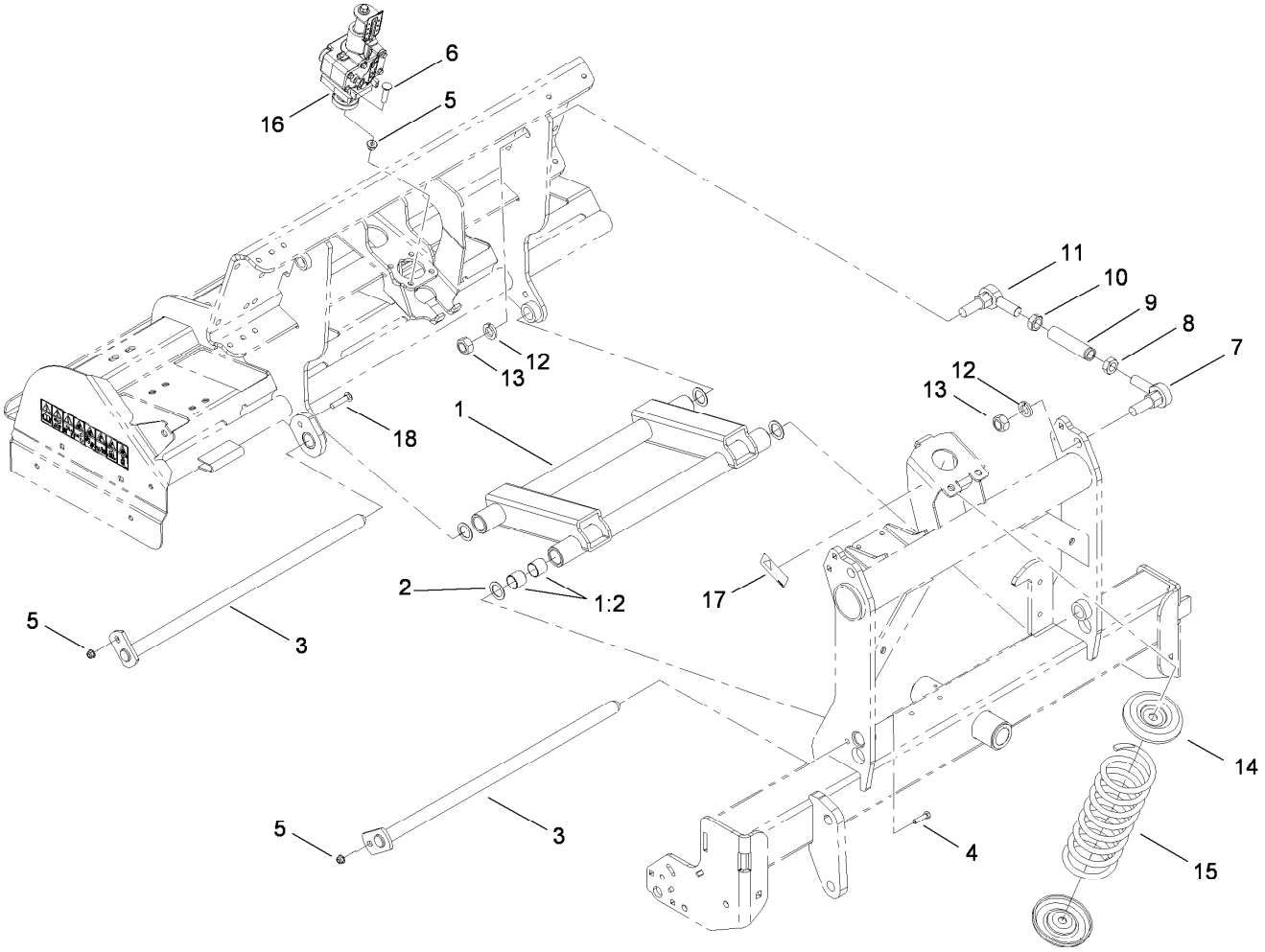

Right Hand H-Frame Assembly

Ref.	Part Number	Qty.	Description
1	110-4618	1	H-Frame ASM
1:2	110-4612	8	Bushing-Straight
2	10-8110	4	Washer-Thrust
3	110-4456	2	Shaft-Pivot
4	323-7	1	Screw-HH
5	104-8301	6	Nut-HF, NI
6	3231-4	4	Screw-CARR
7	105-1025	2	End-Rod
8	3220-17	2	Nut-Jam, LH
9	110-4251	2	Link-Upper
10	3220-7	2	Nut-Jam
11	2411-40	2	End-Rod
12	3253-9	4	Washer-Lock
13	3219-7	4	Nut-Hex
14	110-4287-03	2	Cup-Spring
15	105-4183-01	1	Spring-Compression
16	110-4502	1	Depth Control ASM
17	93-6696	1	Decal-Warning
18	3231-5	1	Screw-CARR

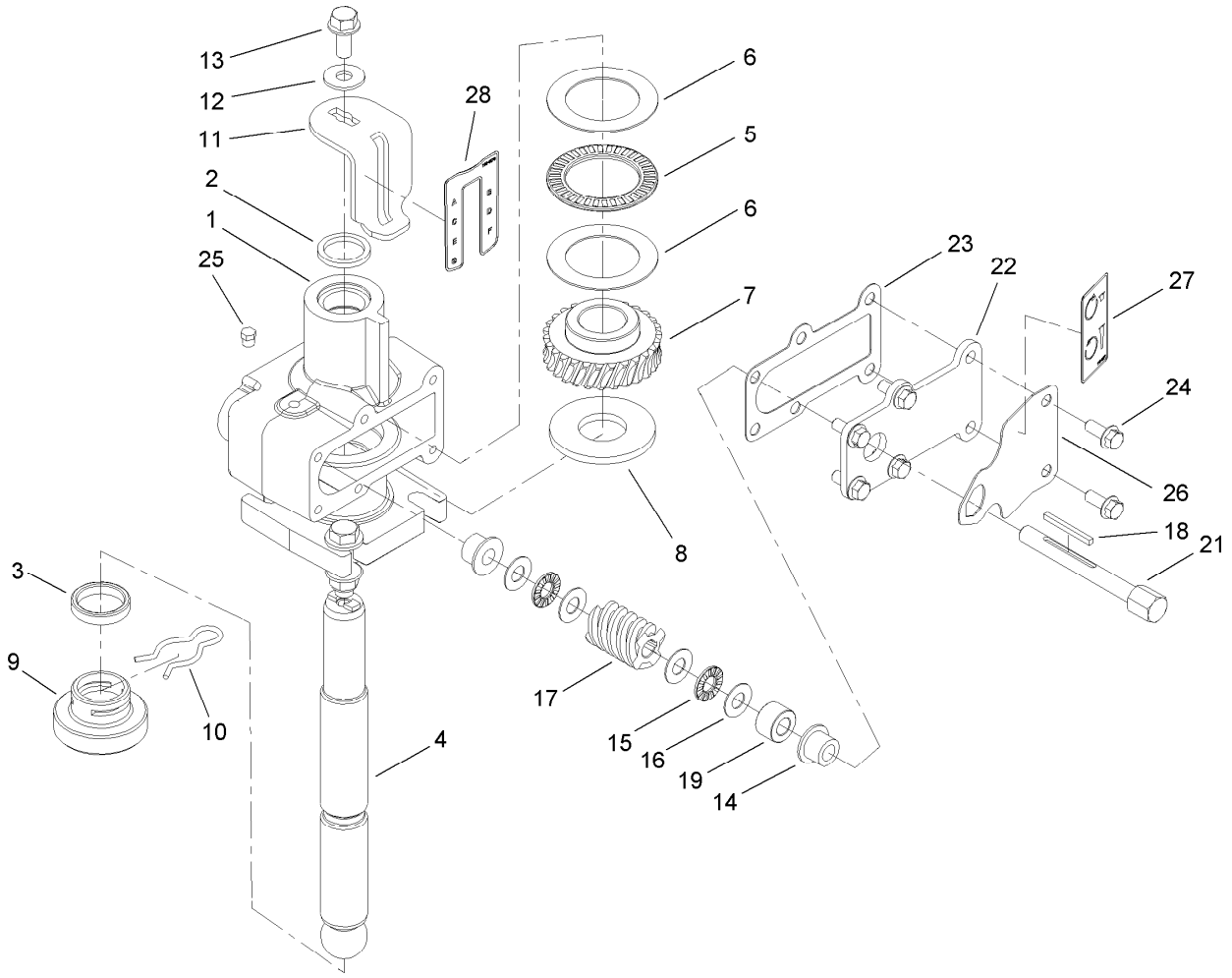

Depth Control Assembly No. 110-4502

Ref.	Part Number	Qty.	Description
1	110-4531	1	Hub-Control, Depth
2	253-59	1	Seal-Oil
3	7-0045	1	Seal-Oil
4	110-4534	1	Shaft-Control, Depth
5	110-4600	1	Bearing-Thrust
6	110-4602	2	Washer-Bearing
7	110-4582	1	Gear-Worm, Depth Control
8	112-4953	1	Washer-Plain
9	110-4438	1	Shoe-Control, Depth
10	110-4439	1	Clip-Hairpin
11	110-4533	1	Gage-Control, Depth
12	3256-71	1	Washer-Flat
13	3234-5	1	Screw-HHF
14	110-4674	2	Bushing-Flange

Ref.	Part Number	Qty.	Description
15	110-4599	2	Bearing-Thrust
16	73-0041	4	Washer-Thrust
17	110-4581	1	Worm-Control, Depth
18	110-4536	1	Key-Gear, Worm
19	110-4537	1	Spacer-Gear, Worm
21	110-4580	1	Shaft-Gear, Worm
22	110-4532-03	1	Cover-Control, Depth
23	110-4578	1	Gasket-Control, Depth
24	3234-33	6	Screw-HHF
25	302-59	1	Plug-EXT Hex Spl
26	110-4604	1	Plate-Lock, Depth
27	110-4677	1	Decal-Rotation, Depth
28	110-4678	1	Decal-Designation, Depth

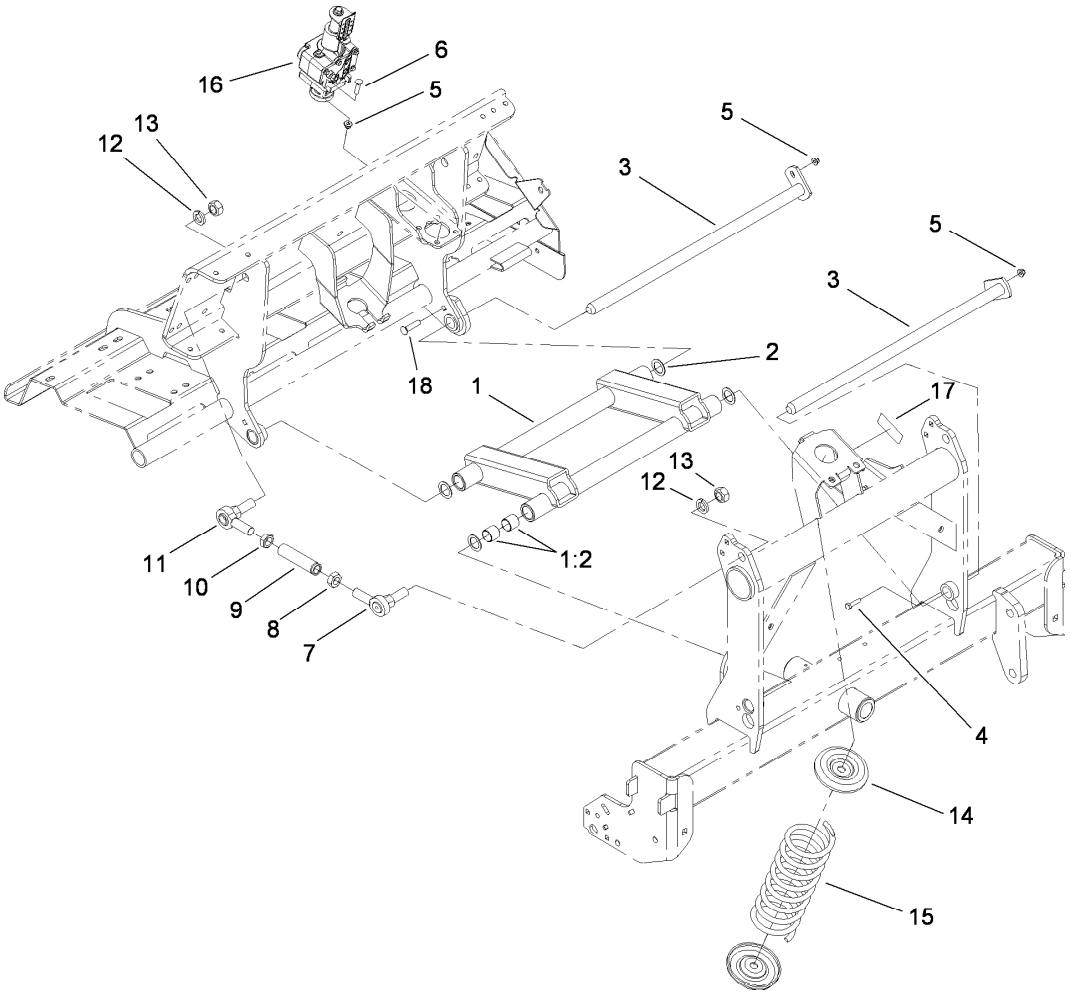

Left Hand H-Frame Assembly

Ref.	Part Number	Qty.	Description
1	110-4618	1	H-Frame ASM
1:2	110-4612	8	Bushing-Straight
2	10-8110	4	Washer-Thrust
3	110-4456	2	Shaft-Pivot
4	323-7	1	Screw-HH
5	104-8301	6	Nut-HF, NI
6	3231-4	4	Screw-CARR
7	105-1025	2	End-Rod
8	3220-17	2	Nut-Jam, LH
9	110-4251	2	Link-Upper
10	3220-7	2	Nut-Jam
11	2411-40	2	End-Rod
12	3253-9	4	Washer-Lock
13	3219-7	4	Nut-Hex
14	110-4287-03	2	Cup-Spring
15	105-4183-01	1	Spring-Compression
16	110-4502	1	Depth Control ASM
17	93-6696	1	Decal-Warning
18	3231-5	1	Screw-CARR

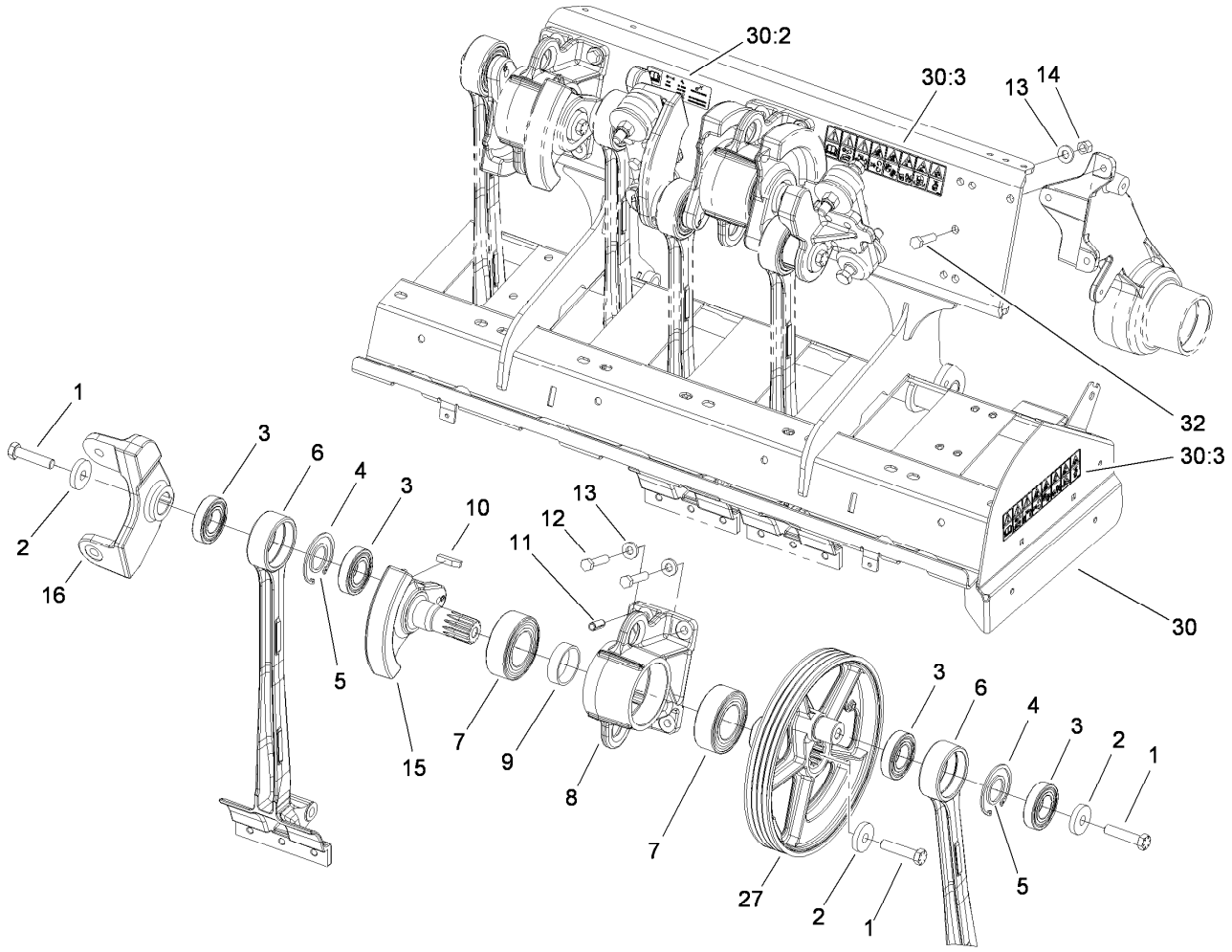

Right Hand No. 1 and No. 2 Crankarm Assembly

Ref.	*Part Number*	*Qty.*	*Description*
1	110-4614	3	Screw-HH
2	105-1016	3	Washer-Hardened
3	110-4556	4	Bearing-Ball
4	32151-76	2	Ring-Retaining, Internal
5	110-4557	2	Spacer-Bearing
6	110-4573	2	Arm-Stomper
7	110-4555	2	Bearing-Ball, 2 Row
8	110-4566	1	Housing-Bearing
9	110-4584	1	Spacer-Bearing
10	110-4546	1	Key-Square
11	105-1041	2	Pin-Spring
12	325-9	4	Screw-HH
13	107-3395	7	Washer-Hardened
14	3296-23	2	Nut-Lock, NI
15	110-4571	1	Crankarm-No. 2, 4, 6
16	110-4567	1	Coupling-No. 2
27	114-1458	1	Pulley-Crankshaft
30	110-4685	1	RH Coring Head Frame ASM
30:2	110-4664	1	Decal-Torque, Bolt
30:3	110-4670	2	Decal-Warning, CE
32	325-8	1	Screw-HH

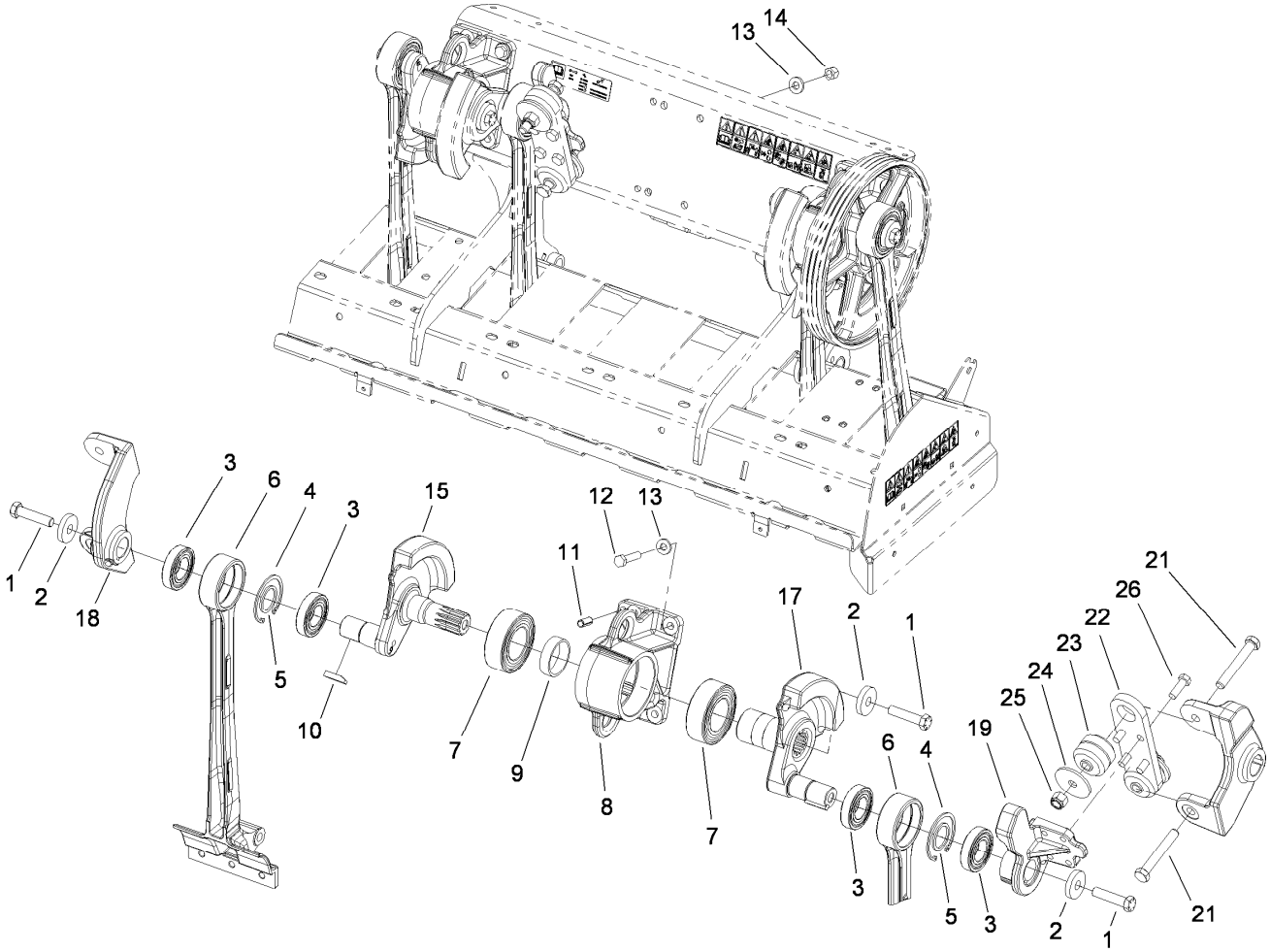

Right Hand No. 3 and No. 4 Crankarm Assembly

Ref.	Part Number	Qty.	Description
1	110-4614	3	Screw-HH
2	105-1016	3	Washer-Hardened
3	110-4556	4	Bearing-Ball
4	32151-76	2	Ring-Retaining, Internal
5	110-4557	2	Spacer-Bearing
6	110-4573	2	Arm-Stomper
7	110-4555	2	Bearing-Ball, 2 Row
8	110-4566	1	Housing-Bearing
9	110-4584	1	Spacer-Bearing
10	110-4546	2	Key-Square
11	105-1041	2	Pin-Spring
12	325-9	4	Screw-HH
13	107-3395	8	Washer-Hardened
14	3296-23	4	Nut-Lock, NI
15	110-4571	1	Crankarm-No. 2, 4, 6
17	110-4572	1	Crankarm-No. 3, 5, 7
18	110-4569	1	Coupling-No.4
19	110-4568	1	Coupling-No. 3
21	327-29	2	Screw-HH
22	105-0974-03	1	Plate-Coupling
23	105-0963	2	Mount-ISO, Crank
24	110-4549	2	Washer-Snubbing
25	3296-53	2	Nut-Lock, NI
26	325-6	4	Screw-HH

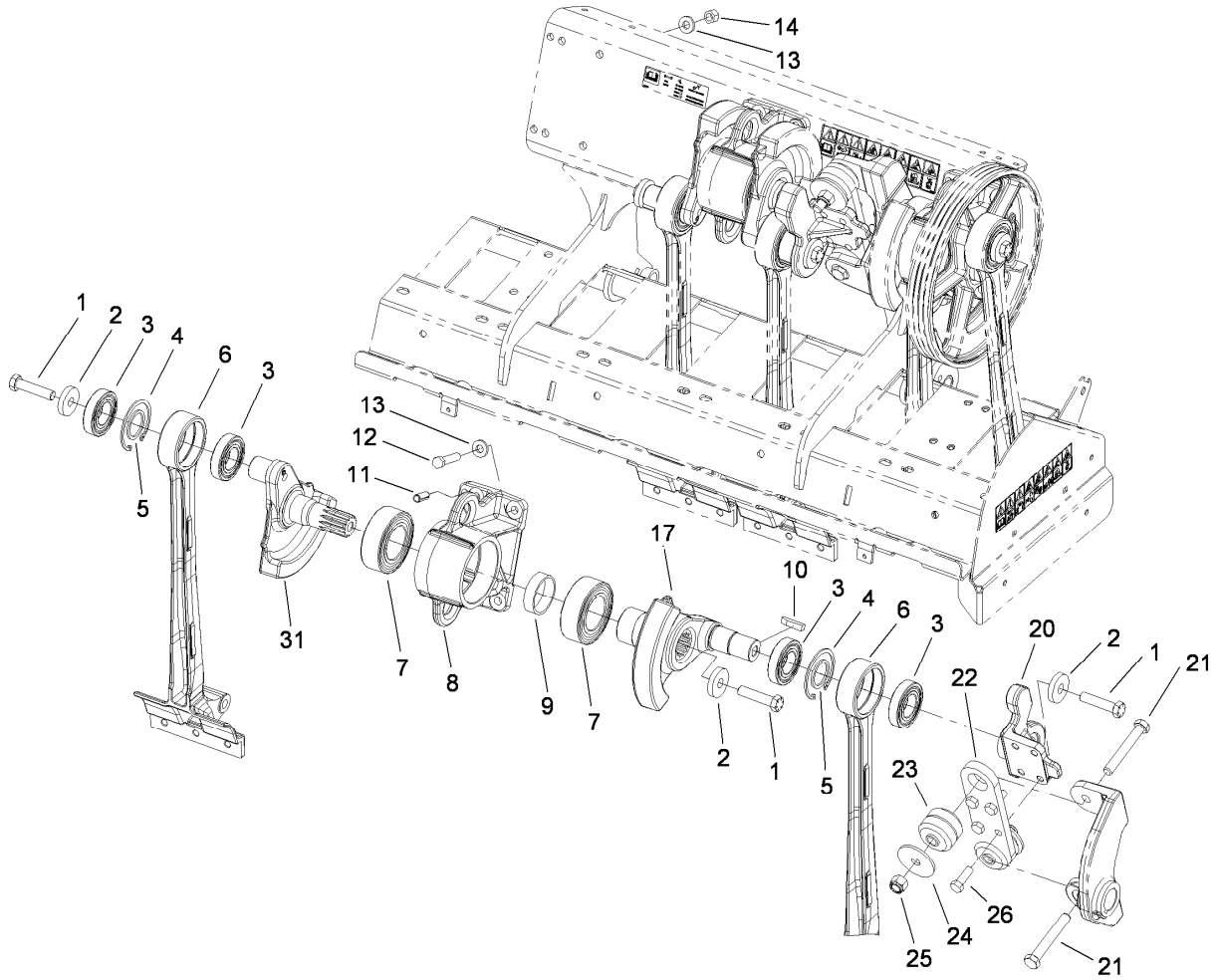

Right Hand No. 5 and No. 6 Crankarm Assembly

Ref.	Part Number	Qty.	Description
1	110-4614	3	Screw-HH
2	105-1016	3	Washer-Hardened
3	110-4556	4	Bearing-Ball
4	32151-76	2	Ring-Retaining, Internal
5	110-4557	2	Spacer-Bearing
6	110-4573	2	Arm-Stomper
7	110-4555	2	Bearing-Ball, 2 Row
8	110-4566	1	Housing-Bearing
9	110-4584	1	Spacer-Bearing
10	110-4546	1	Key-Square
11	105-1041	2	Pin-Spring
12	325-9	4	Screw-HH
13	107-3395	8	Washer-Hardened
14	3296-23	4	Nut-Lock, NI
17	110-4572	1	Crankarm-No. 3, 5, 7
20	110-4570	1	Coupling-N0.5
21	327-29	2	Screw-HH
22	105-0974-03	1	Plate-Coupling
23	105-0963	2	Mount-ISO, Crank
24	110-4549	2	Washer-Snubbing
25	3296-53	2	Nut-Lock, NI
26	325-6	4	Screw-HH
31	110-4576	1	Crankarm-No.6

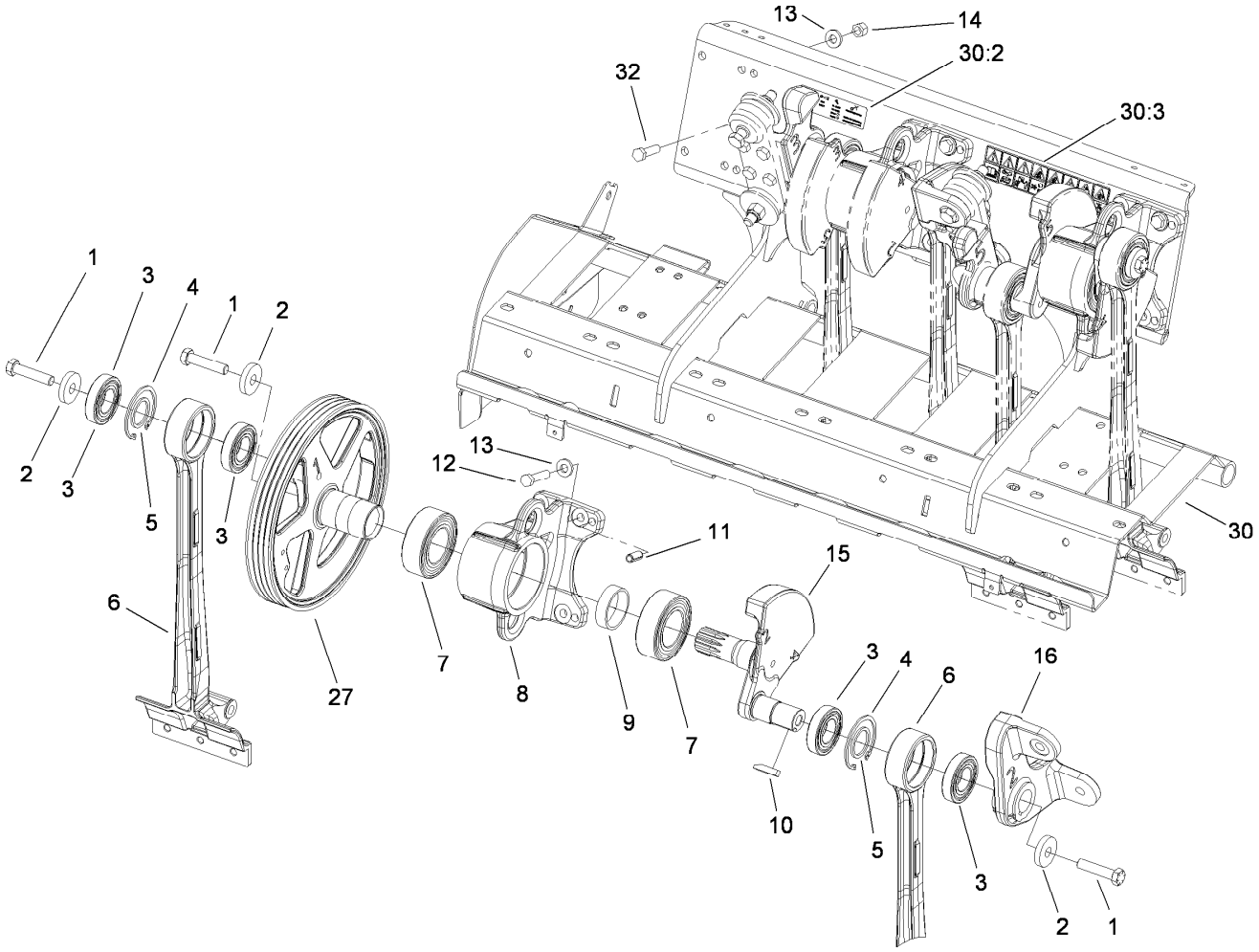

Left Hand No. 1 and No. 2 Crankarm Assembly

Ref.	*Part Number*	*Qty.*	*Description*
1	110-4614	3	Screw-HH
2	105-1016	3	Washer-Hardened
3	110-4556	4	Bearing-Ball
4	32151-76	2	Ring-Retaining, Internal
5	110-4557	2	Spacer-Bearing
6	110-4573	2	Arm-Stomper
7	110-4555	2	Bearing-Ball, 2 Row
8	110-4566	1	Housing-Bearing
9	110-4584	1	Spacer-Bearing
10	110-4546	1	Key-Square
11	105-1041	2	Pin-Spring
12	325-9	4	Screw-HH
13	107-3395	7	Washer-Hardened
14	3296-23	2	Nut-Lock, NI
15	110-4571	1	Crankarm-No. 2, 4, 6
16	110-4567	1	Coupling-No. 2
27	114-1458	1	Pulley-Crankshaft
30	110-4686	1	LH Coring Head Frame ASM
30:2	110-4664	1	Decal-Torque, Bolt
30:3	110-4670	2	Decal-Warning, CE
32	325-8	1	Screw-HH

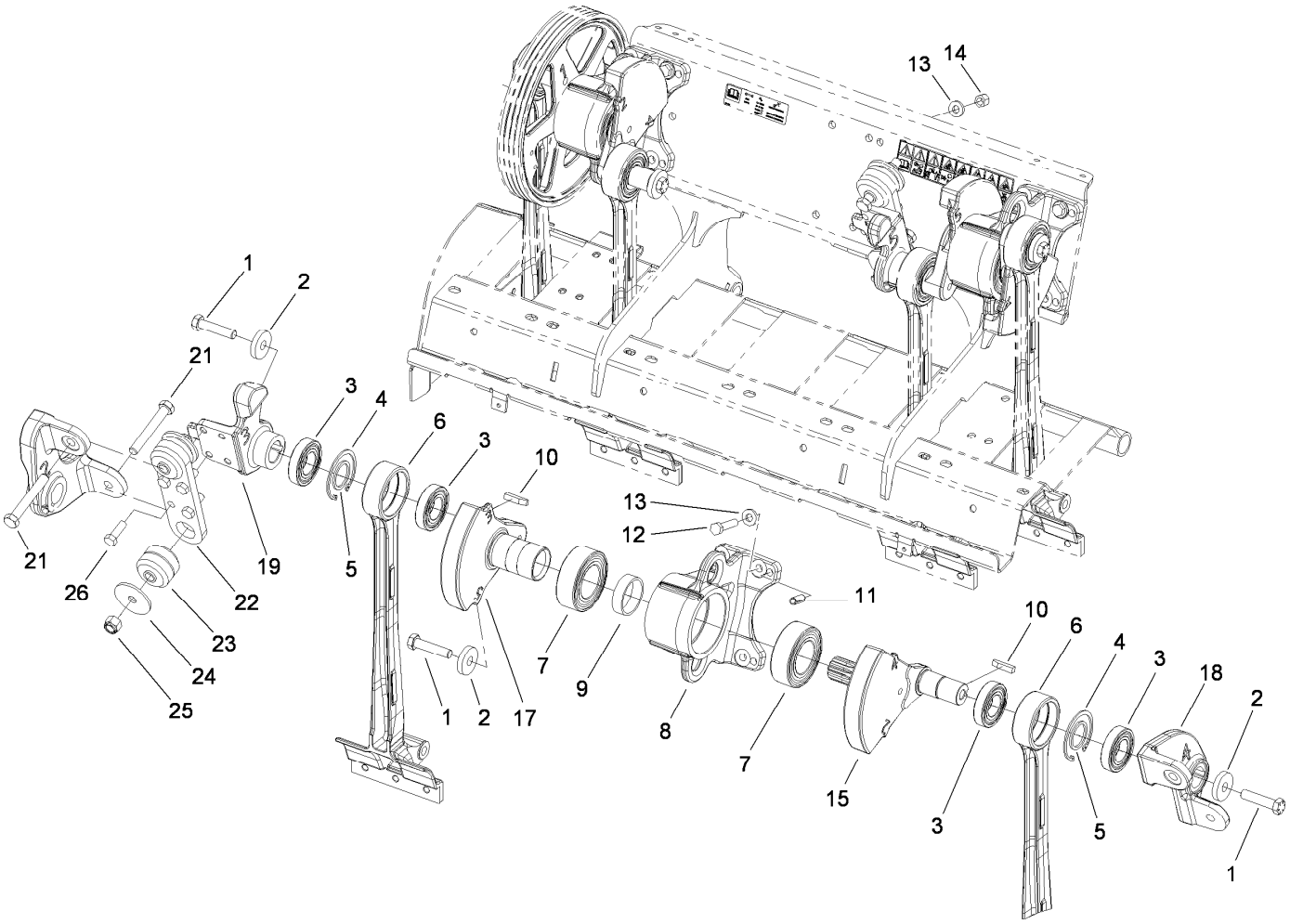

Left Hand No. 3 and No. 4 Crankarm Assembly

Ref.	*Part Number*	*Qty.*	*Description*
1	110-4614	3	Screw-HH
2	105-1016	3	Washer-Hardened
3	110-4556	4	Bearing-Ball
4	32151-76	2	Ring-Retaining, Internal
5	110-4557	2	Spacer-Bearing
6	110-4573	2	Arm-Stomper
7	110-4555	2	Bearing-Ball, 2 Row
8	110-4566	1	Housing-Bearing
9	110-4584	1	Spacer-Bearing
10	110-4546	2	Key-Square
11	105-1041	2	Pin-Spring
12	325-9	4	Screw-HH
13	107-3395	8	Washer-Hardened
14	3296-23	4	Nut-Lock, NI
15	110-4571	1	Crankarm-No. 2, 4, 6
17	110-4572	1	Crankarm-No. 3, 5, 7
18	110-4569	1	Coupling-No.4
19	110-4568	1	Coupling-No. 3
21	327-29	2	Screw-HH
22	105-0974-03	1	Plate-Coupling
23	105-0963	2	Mount-ISO, Crank
24	110-4549	2	Washer-Snubbing
25	3296-53	2	Nut-Lock, NI
26	325-6	4	Screw-HH

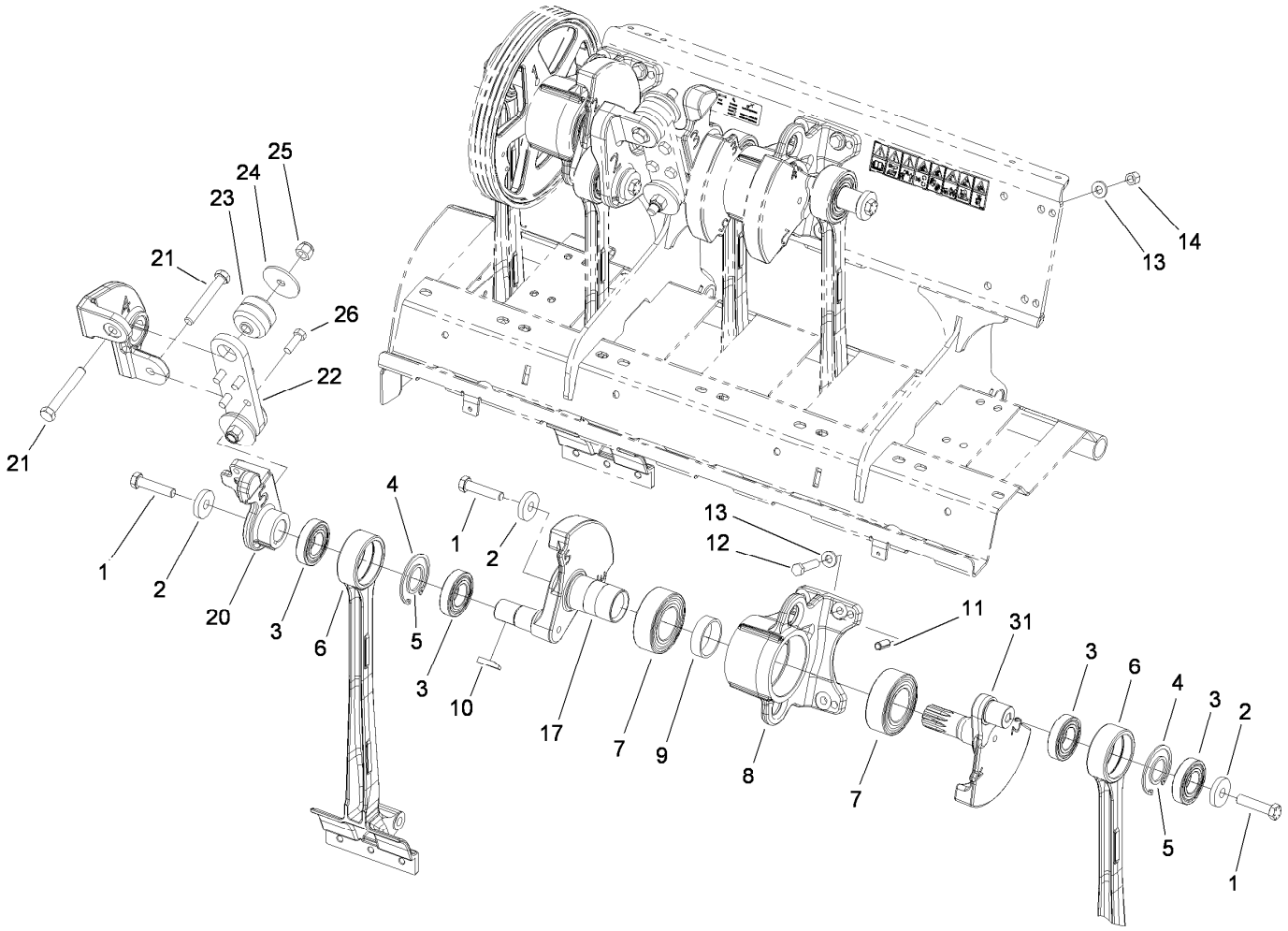

Left Hand No. 5 and No. 6 Crankarm Assembly

Ref.	Part Number	Qty.	Description
1	110-4614	3	Screw-HH
2	105-1016	3	Washer-Hardened
3	110-4556	4	Bearing-Ball
4	32151-76	2	Ring-Retaining, Internal
5	110-4557	2	Spacer-Bearing
6	110-4573	2	Arm-Stomper
7	110-4555	2	Bearing-Ball, 2 Row
8	110-4566	1	Housing-Bearing
9	110-4584	1	Spacer-Bearing
10	110-4546	1	Key-Square
11	105-1041	2	Pin-Spring
12	325-9	4	Screw-HH
13	107-3395	8	Washer-Hardened
14	3296-23	4	Nut-Lock, NI
17	110-4572	1	Crankarm-No. 3, 5, 7
20	110-4570	1	Coupling-N0.5
21	327-29	2	Screw-HH
22	105-0974-03	1	Plate-Coupling
23	105-0963	2	Mount-ISO, Crank
24	110-4549	2	Washer-Snubbing
25	3296-53	2	Nut-Lock, NI
26	325-6	4	Screw-HH
31	110-4576	1	Crankarm-No.6

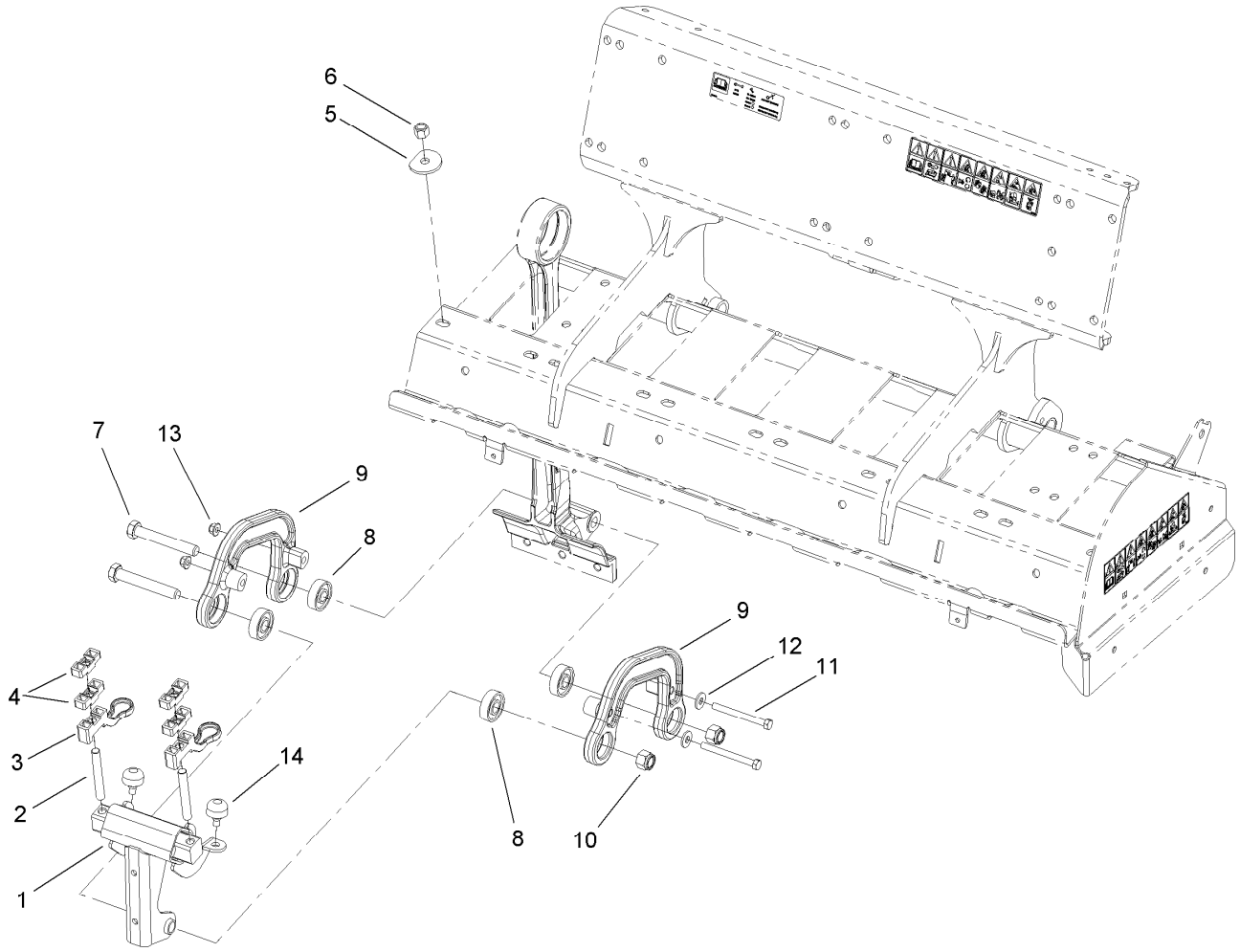

Roto-Link Damper Assembly

Ref.	*Part Number*	*Qty.*	*Description*
1	106-8922	12	Damper
2	110-4504	24	Stud
3	110-4506	24	Bumper-Rotolink
4	110-4507	48	Standoff-Rotolink
5	107-7543	24	Washer-Hardened
6	32128-23	24	Nut-HF
7	327-29	24	Screw-HH
8	251-311	48	Bearing-Ball
9	105-1000	24	Link-Damper
10	3296-53	24	Nut-Lock, NI
11	323-42	24	Screw-HH
12	80-6990	24	Washer-Hardened
13	104-8301	24	Nut-HF, NI
14	87-2440	24	Bumper-Rubber

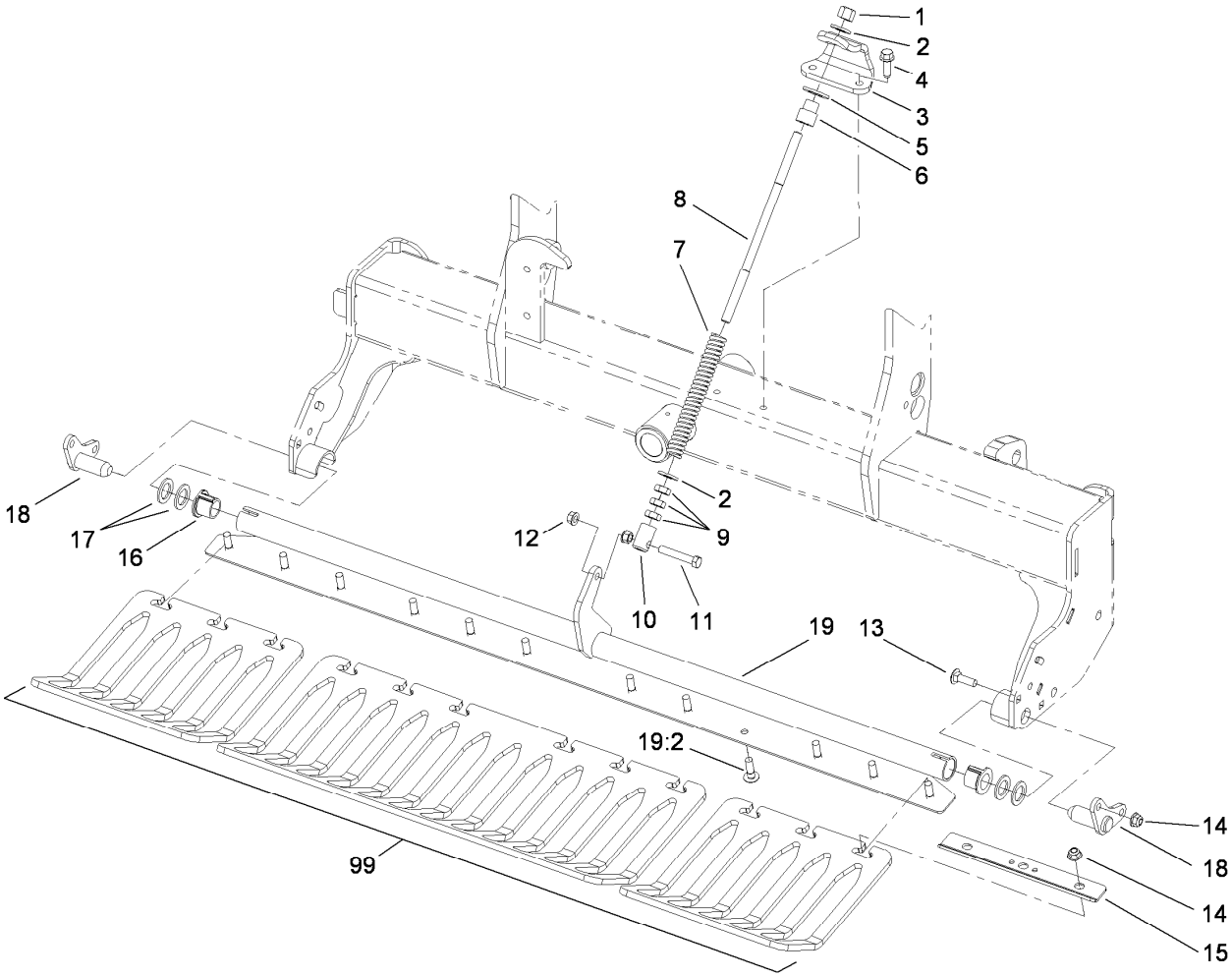

Right Hand Turf Guard Assembly

Ref.	Part Number	Qty.	Description
1	3296-23	1	Nut-Lock, NI
2	65-6390	2	Washer-Thrust, Plain
3	110-4267-03	1	Bracket-Spring
4	32144-109	2	Screw-Thd
5	3256-28	1	Washer-Flat
6	110-4416	1	Sleeve-Rod, Spring
7	110-4417	1	Spring-Compression
8	110-4421	1	Rod-Spring
9	3218-5	3	Nut-Jam
10	99-8662	1	Tube-Spring
11	323-45	1	Screw-HH
12	32128-40	2	Nut-Flange
13	3231-25	4	Bolt-CARR
14	104-8301	16	Nut-HF, NI

Ref.	Part Number	Qty.	Description
15	110-4274-03	4	Clamp-Guard, Turf
16	107-7581	2	Bushing-Flange, Keyed
17	3-7898	4	Washer-Thrust
18	110-4296	2	Shaft-Stub
19	110-4621	1	Turfguard ASM
19:2	110-4268	12	Screw-Neck, Rib
99	110-4357	2	Guard-Turf, 3-Tine (Short) ■
99	110-4358	1	Guard-Turf, 3-Tine, Long ■
99	110-4361	2	Guard-Turf, 4-Tine (Short) ● ■
99	110-4362	1	Guard-Turf, 4-Tine, Long ● ■
99	110-4365	2	Guard-Turf, 5 Tine, Short ● ■
99	110-4366	1	Guard-Turf, 5 Tine, Long ● ■

● Not illustrated

■ Optional Equipment

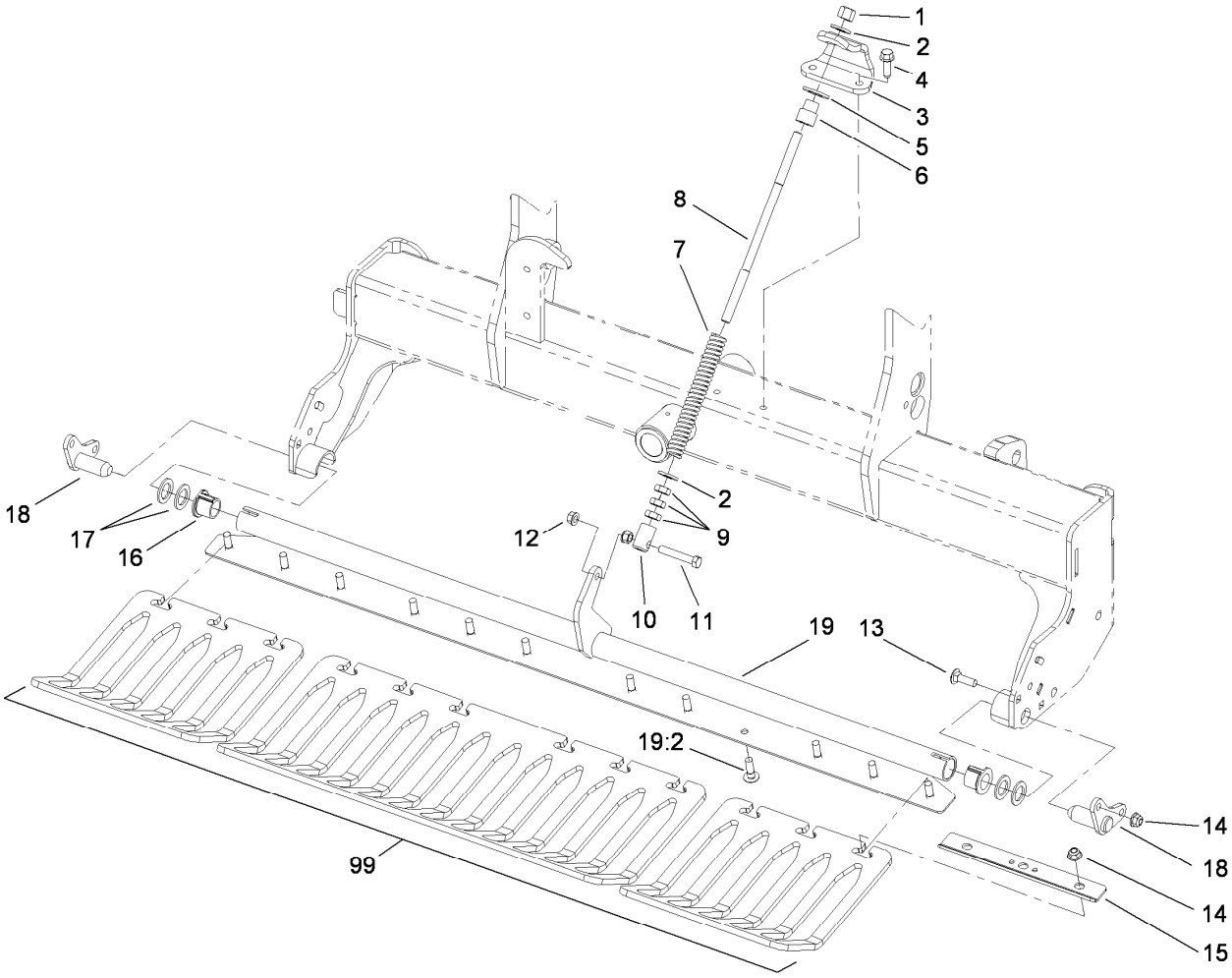

Left Hand Turf Guard Assembly

Ref.	Part Number	Qty.	Description
1	3296-23	1	Nut-Lock, NI
2	65-6390	2	Washer-Thrust, Plain
3	110-4267-03	1	Bracket-Spring
4	32144-109	2	Screw-Thd
5	3256-28	1	Washer-Flat
6	110-4416	1	Sleeve-Rod, Spring
7	110-4417	1	Spring-Compression
8	110-4421	1	Rod-Spring
9	3218-5	3	Nut-Jam
10	99-8662	1	Tube-Spring
11	323-45	1	Screw-HH
12	32128-40	2	Nut-Flange
13	3231-25	4	Bolt-CARR
14	104-8301	16	Nut-HF, NI

Ref.	Part Number	Qty.	Description
15	110-4274-03	4	Clamp-Guard, Turf
16	107-7581	2	Bushing-Flange, Keyed
17	3-7898	4	Washer-Thrust
18	110-4296	2	Shaft-Stub
19	110-4621	1	Turfguard ASM
19:2	110-4268	12	Screw-Neck, Rib
99	110-4357	2	Guard-Turf, 3-Tine (Short) ■
99	110-4358	1	Guard-Turf, 3-Tine, Long ■
99	110-4361	2	Guard-Turf, 4-Tine (Short) ● ■
99	110-4362	1	Guard-Turf, 4-Tine, Long ● ■
99	110-4365	2	Guard-Turf, 5 Tine, Short ● ■
99	110-4366	1	Guard-Turf, 5 Tine, Long ● ■

● Not illustrated

■ Optional Equipment

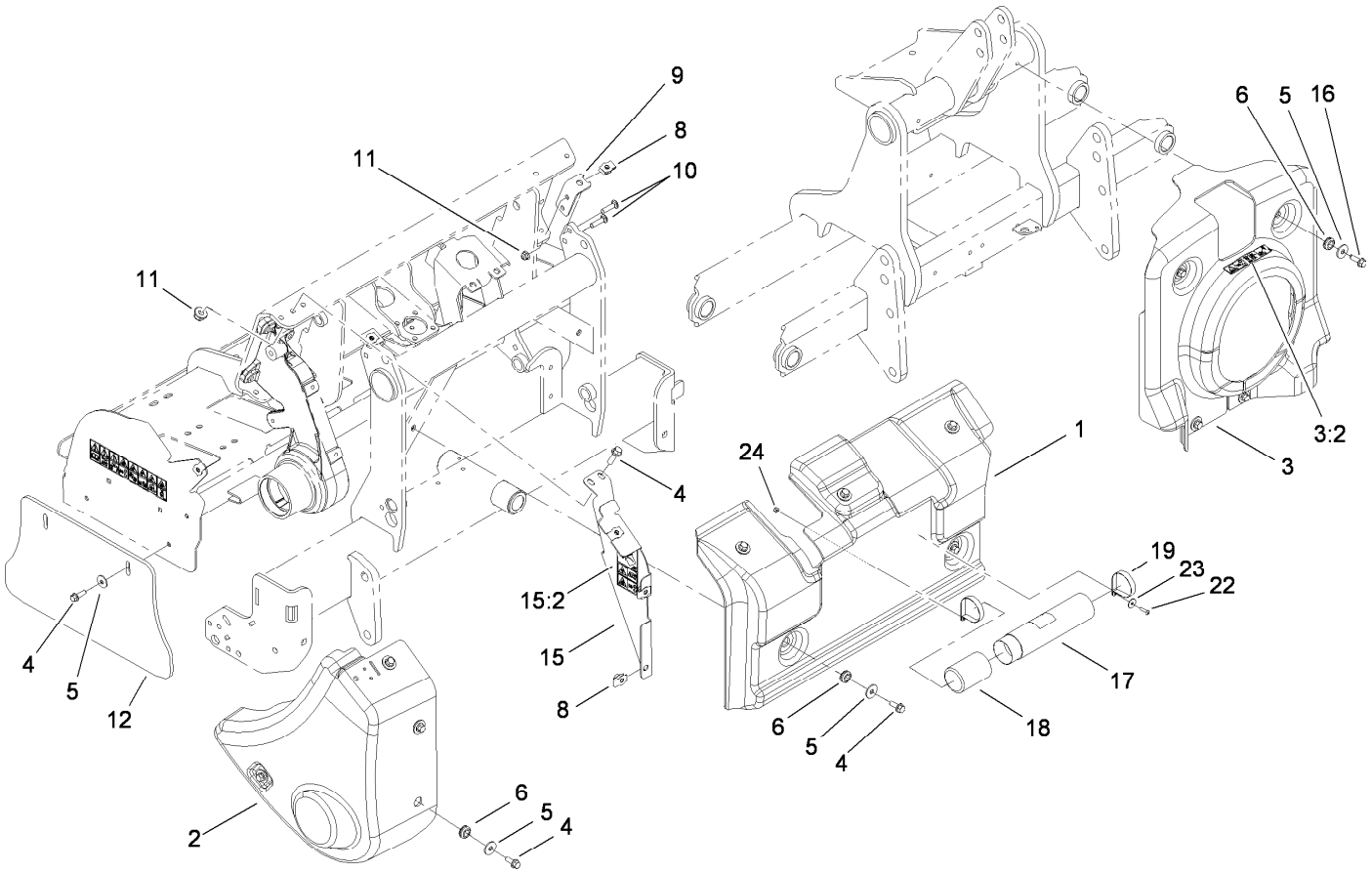

Right Hand Front Cover Assembly

Ref.	Part Number	Qty.	Description
1	110-4468	1	Cover-Front, RH
2	110-4466	1	Shield-Pulley, RH
3	110-4683	1	Yoke Cover ASM
3:2	110-4668	1	Decal-Warning, PTO
4	3234-24	15	Screw-HHF
5	93-8806	15	Washer-Hardened
6	110-4697	13	Mount-Isolated
8	105-4886	7	Nut-Tinnerman
9	110-4478	2	Support-Cover, Front
10	3231-25	4	Bolt-CARR
11	104-8301	8	Nut-HF, NI
12	105-1069	1	Shield-Side
15	110-4680	1	RH Shield Support ASM
15:2	110-4667	1	Decal-Warning, Spring
16	32144-109	4	Screw-Thd
17	104-7050	1	Tube-Manual
18	104-7048	1	Cap-Housing
19	2412-120	2	Clamp-R
22	104-2408	2	Screw-HSBH
23	3256-61	2	Washer-Flat
24	3296-2	2	Nut-Lock, NI

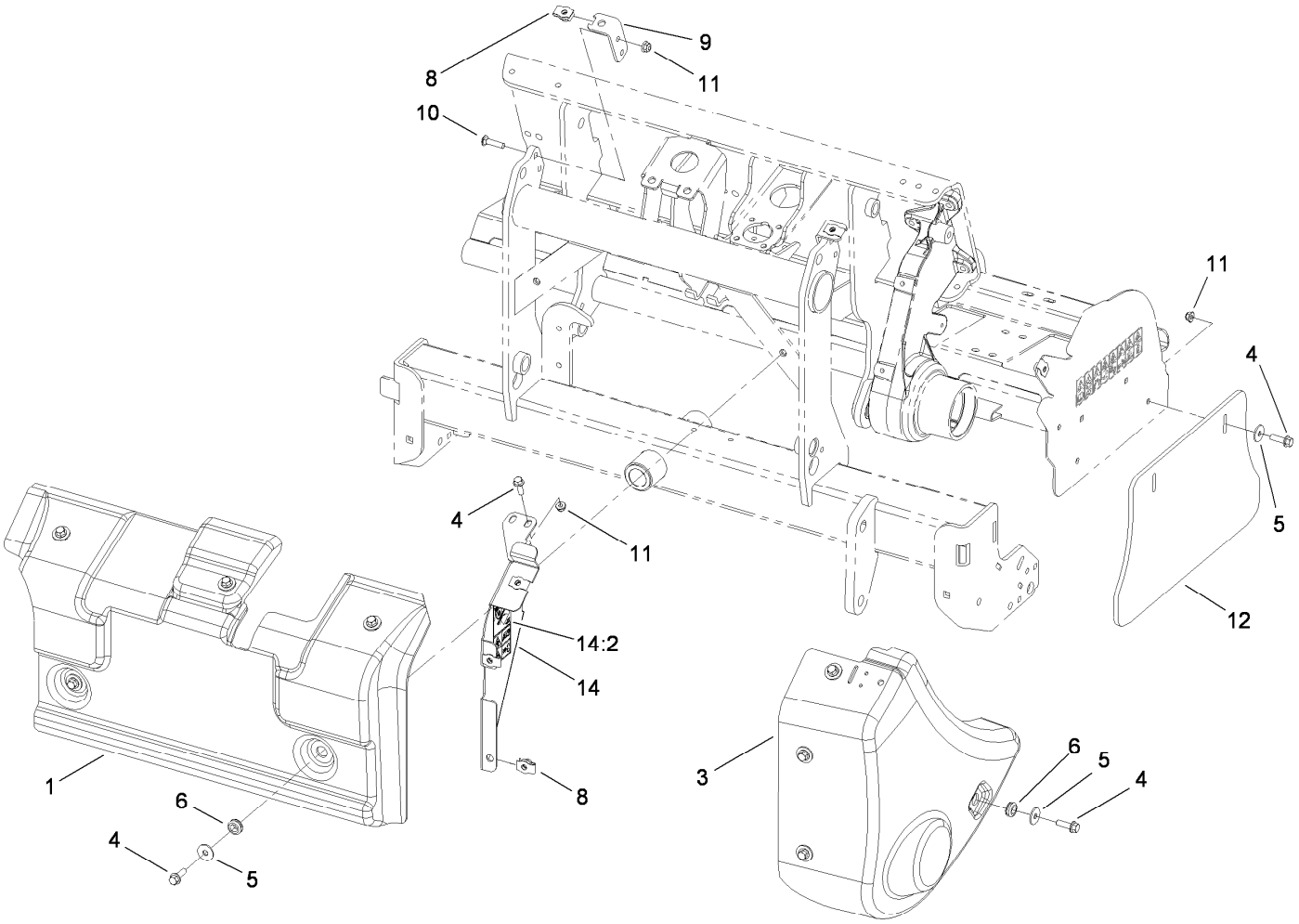

Left Hand Front Cover Assembly

Ref.	*Part Number*	*Qty.*	*Description*
1	110-4469	1	Cover-Front, LH
3	110-4467	1	Shield-Pulley, LH
4	3234-24	15	Screw-HHF
5	93-8806	11	Washer-Hardened
6	110-4697	9	Mount-Isolated
8	105-4886	7	Nut-Tinnerman
9	110-4478	2	Support-Cover, Front
10	3231-25	4	Bolt-CARR
11	104-8301	8	Nut-HF, NI
12	105-1069	1	Shield-Side
14	110-4681	1	LH Shield Support ASM
14:2	110-4667	1	Decal-Warning, Spring

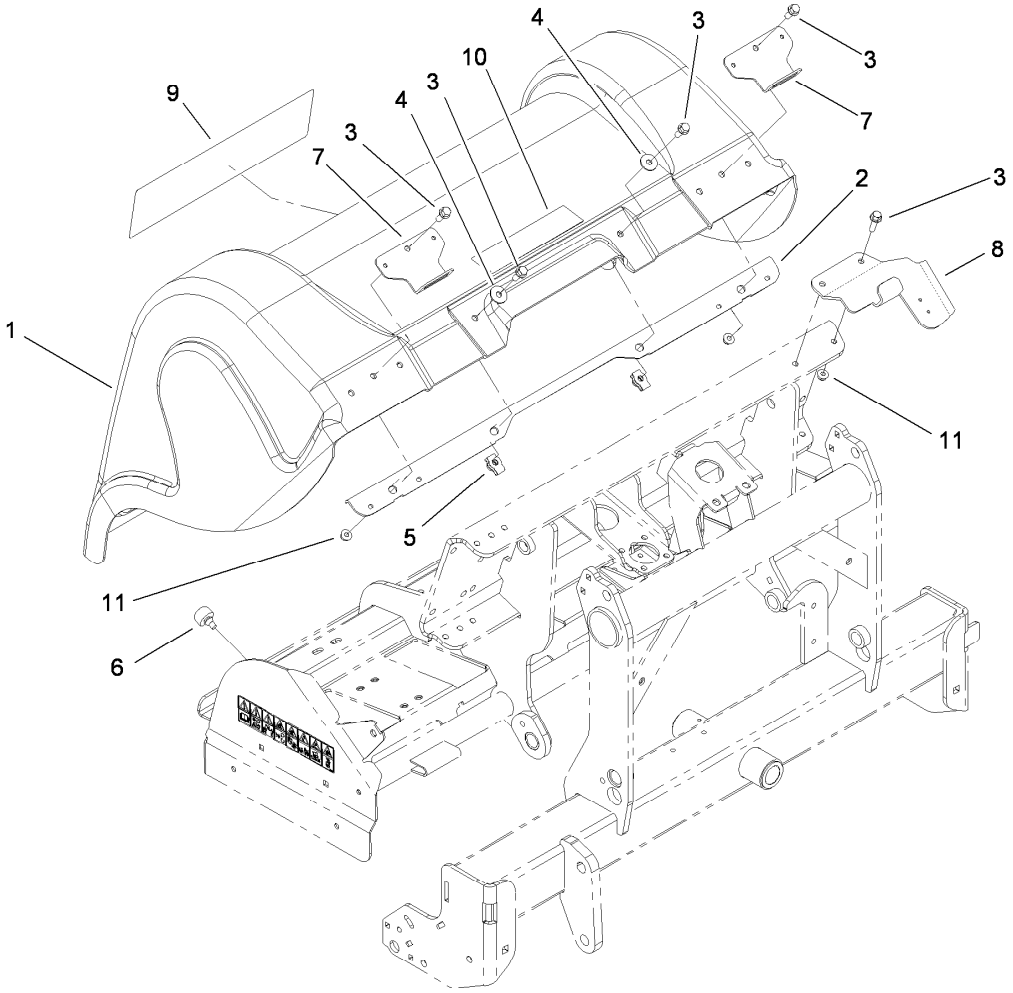

Right Hand Rear Cover Assembly

Ref.	*Part Number*	*Qty.*	*Description*
1	110-4464	1	Hood-Rear
2	110-4481-03	1	Stiffener-Hood
3	3234-24	6	Screw-HHF
4	93-8806	2	Washer-Hardened
5	105-4886	2	Nut-Tinnerman
6	87-2440	4	Bumper-Rubber
7	110-4552-03	2	Stirrup-Hood
8	110-4479-03	1	Mount-Latch, RH
9	110-4425	1	Decal-Procore
10	106-8856	1	Decal - Tine Depth, CE
11	104-8301	4	Nut-HF, NI

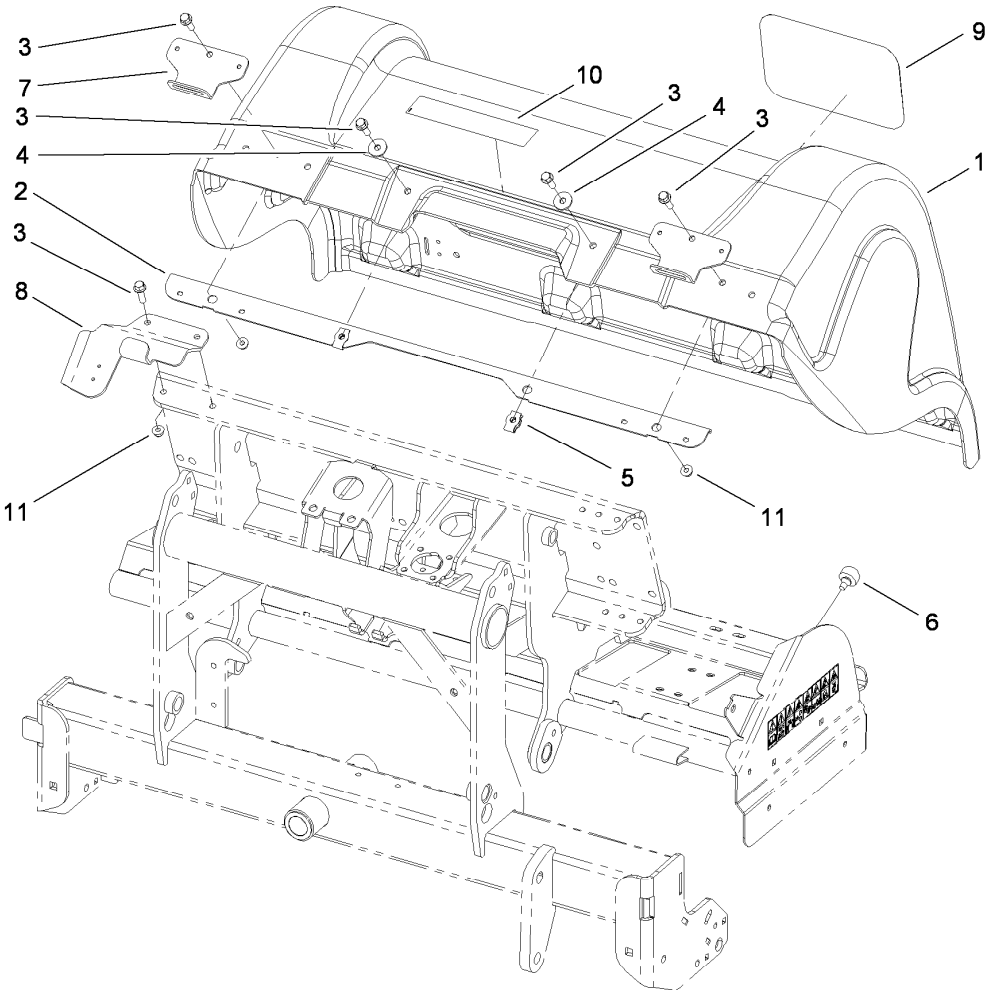

Left Hand Rear Cover Assembly

Ref.	*Part Number*	*Qty.*	*Description*
1	110-4464	1	Hood-Rear
2	110-4481-03	1	Stiffener-Hood
3	3234-24	6	Screw-HHF
4	93-8806	2	Washer-Hardened
5	105-4886	2	Nut-Tinnerman
6	87-2440	4	Bumper-Rubber
7	110-4552-03	2	Stirrup-Hood
8	110-4480-03	1	Mount-Latch, LH
9	67-7310	1	Decal
10	106-8856	1	Decal - Tine Depth, CE
11	104-8301	4	Nut-HF, NI

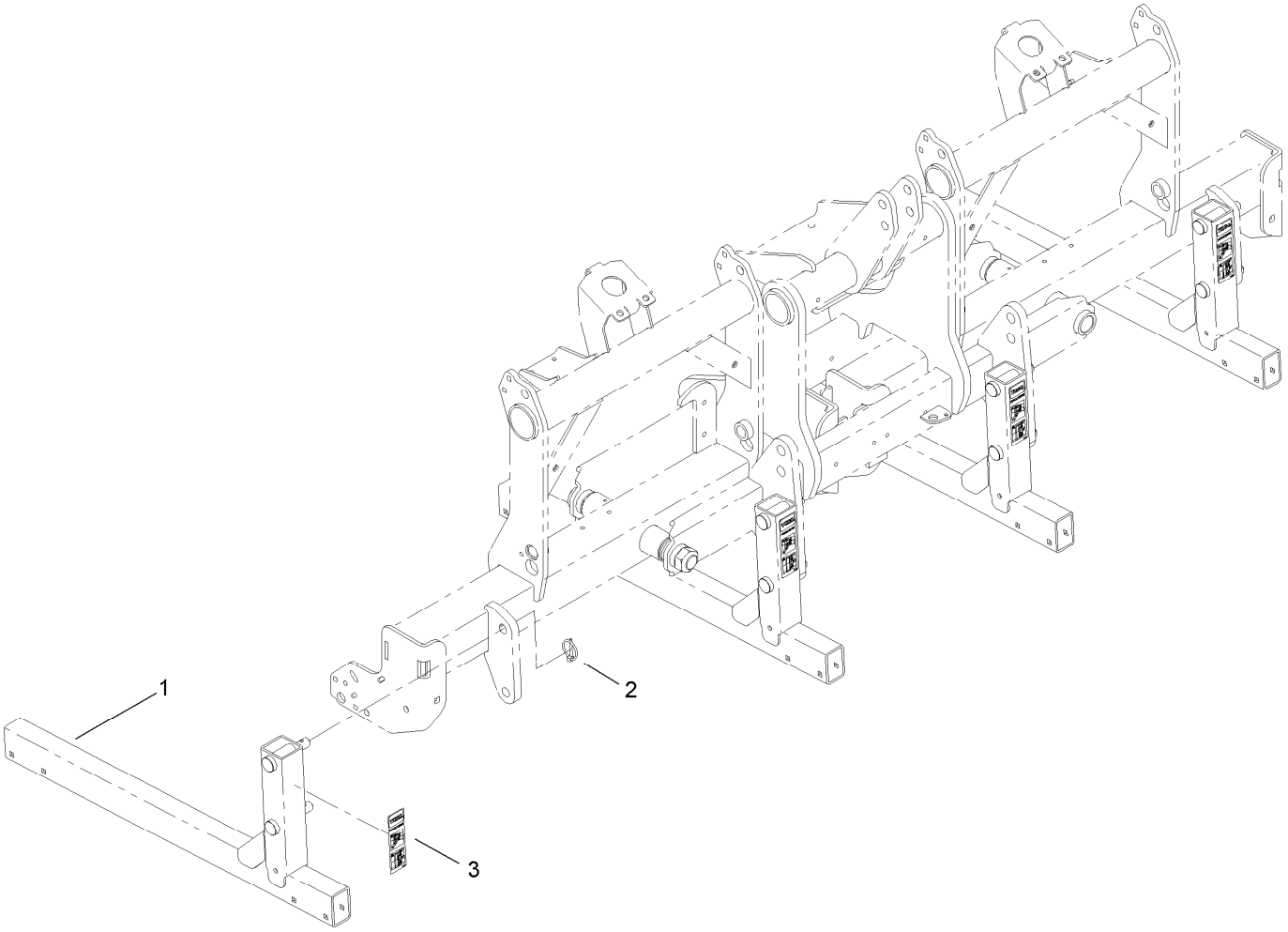

Storage Stand Assembly

Ref.	*Part Number*	*Qty.*	*Description*
1	110-4292-03	4	Stand
2	92-1298	8	Pin-Lynch
3	110-4666	4	Decal-Service, Storage

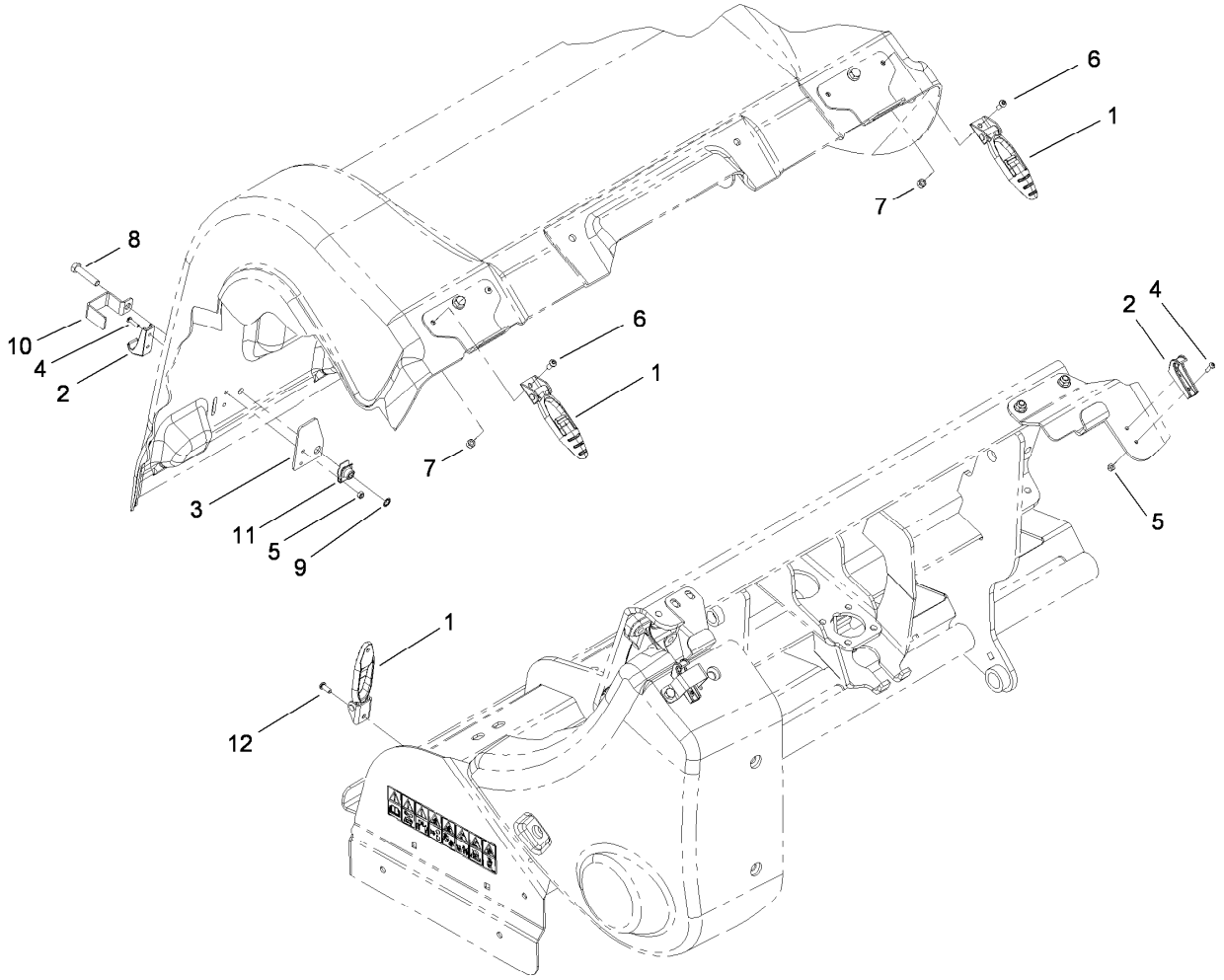

Cover Latch Assembly

Ref.	Part Number	Qty.	Description
1	103-2898	8	Latch-Rubber
2	103-2897	8	Latch-Catch
3	110-4672	6	Plate-Reinforcement
4	104-2408	16	Screw-HSBH
5	3296-2	16	Nut-Lock, NI
6	321-6	8	Screw-HH
7	3296-42	12	Nut-Lock, NI
8	323-53	6	Screw-HH
9	32151-72	6	Ring-Retaining
10	110-4673	6	Lock-Latch, CE
11	105-4886	6	Nut-Tinnerman
12	3234-4	4	Screw-HHF

Attachments and Accessories

For 09716 ProCore 1298 Aerator

Product Name	Model/Part
Premium All Season Gear Lube (5 Gallon Pail)	108-1187
Premium All Purpose Grease (Tube)	108-1190
Premium All Season Gear Lube (Quart)	108-1590
3-Tine Turf Guard (Short)	110-4357
3-Tine Turf Guard (Long)	110-4358
4-Tine Turf Guard (Short)	110-4361
4-Tine Turf Guard (Long)	110-4362
Mini Turf Guard (Short)	110-4365
Mini Turf Guard (Long)	110-4366
6-Tine Turf Guard (Short)	110-4369
6-Tine Turf Guard (Long)	110-4370
Sleeve Tool ASM	114-0590-01

TORO®

Count on it.