Form No. 3453-113 Rev B

TORO®

Count on it.

Parts Catalog

ProCore® 1298

Aerator

Model No. 09716—Serial No. 410400000 and Up

Register at www.Toro.com.
Original Instructions (EN)

CE

3453-113 B

Ordering Replacement Parts

To order replacement parts, please supply the part number, the quantity, and the description of each part desired.

Understanding Reference Numbers

Each identified part in an illustration has a reference number. The reference number for a part also appears in the parts list, along with other information about the part.

This catalog uses two special reference number formats, one to indicate parts in a service assembly and another to indicate the quantity of a given part in an illustration.

Service Assembly Reference Numbers

Parts in service assemblies have reference numbers in the form a:b. The a represents the reference number of the entire service assembly and the b represents a sequential number unique to each part within the service assembly.

For example, a wheel assembly might be identified by reference number 6, the tire by 6:1, the valve by 6:2, and the wheel by 6:3. When you order the assembly identified by reference number 6, you receive all parts identified by reference numbers 6:1,6:2, and 6:3. However, you may also order any part individually. Reference numbers of this type appear in illustration and in parts lists.

Reference Numbers Indicating Quantity

In an illustration, if a reference number indicates more than one part, the reference number has the form nX y. The n represents the quantity of the part, the X is the multiplication symbol, and the y represents the reference number.

For example, in an illustration, the reference number 2X 37 means that two of the parts identified by reference number 37 are indicated.

Contents

Frame Assembly 4
Gearbox and Driveline Assembly 5
Shielded Drive Shaft Assembly No. 110-4283 6
Gearbox Assembly No. 110-4565 7
Drive Shaft Assembly No. 110-4586 8
Right Hand Roller and Scraper Assembly 9
Left Hand Roller and Scraper Assembly 10
Right Hand Belt Drive Assembly 11
Left Hand Belt Drive Assembly 12
Right Hand H-Frame Assembly 13
Depth Control Assembly No. 115-2844 14
Left Hand H-Frame Assembly 15
Right Hand No. 1 and No. 2 Crankarm Assembly 16
Right Hand No. 3 and No. 4 Crankarm Assembly 17
Right Hand No. 5 and No. 6 Crankarm Assembly 18
Left Hand No. 1 and No. 2 Crankarm Assembly 19
Left Hand No. 3 and No. 4 Crankarm Assembly 20
Left Hand No. 5 and No. 6 Crankarm Assembly 21
Roto-Link Damper Assembly 22
Right Hand Turf Guard Assembly 23
Left Hand Turf Guard Assembly 24
Right Hand Front Cover Assembly 25
Left Hand Front Cover Assembly 26
Right Hand Rear Cover Assembly 27
Left Hand Rear Cover Assembly 28
Storage Stand Assembly 29
Cover Latch Assembly 30
Attachments and Accessories 31

© 2023—The Toro® Company
8111 Lyndale Avenue South
Bloomington, MN 55420

Contact us at www.Toro.com.
Printed in the USA.
All Rights Reserved

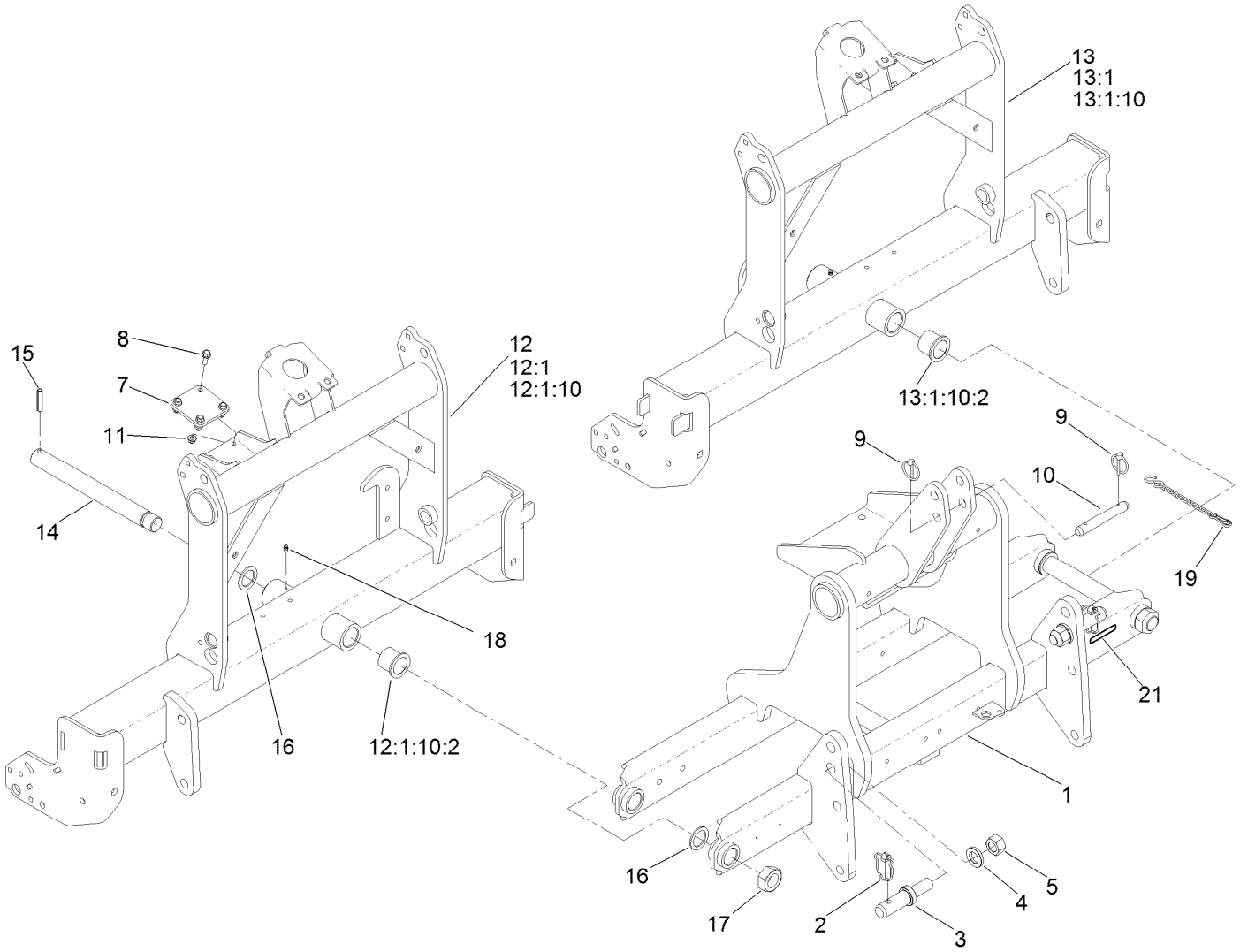

Frame Assembly

Ref.	Part Number	Qty.	Description
1	110-4202-03	1	Mast-Hitch, 3-Point
2	3290-384	2	Pin-Lynch
3	110-4314	2	Pin-Link, Cat 2
4	120-5576	2	Washer-Hardened
5	3219-18	2	Nut-Hex
7	110-4440	2	Pad
8	3234-17	8	Screw-HHF
9	92-1298	2	Pin-Lynch
10	92-1233	1	Pin-Clevis
11	104-8300	8	Nut-HF, NI
12	110-4209-01	1	RH Subframe ASM
12:1		1	Subframe-RH ●
12:1:10		1	Hub ASM ●
12:1:10:2	69-6470	2	Bushing-Caster
13	110-4210-01	1	LH Subframe ASM
13:1		1	Subframe-LH ●
13:1:10		1	Hub ASM ●
13:1:10:2	69-6470	2	Bushing-Caster
14	71-2590	2	Shaft-Pivot
15	32121-110	2	Pin-Roll, Slotted
16	256-304	4	Washer-Thrust
17	3296-68	2	Nut-Lock, NI
18	302-5	2	Fitting-Grease
19	110-4679	1	Chain-Storage, Driveline
21	133-8061	1	Decal-Warning

● Not serviced separately

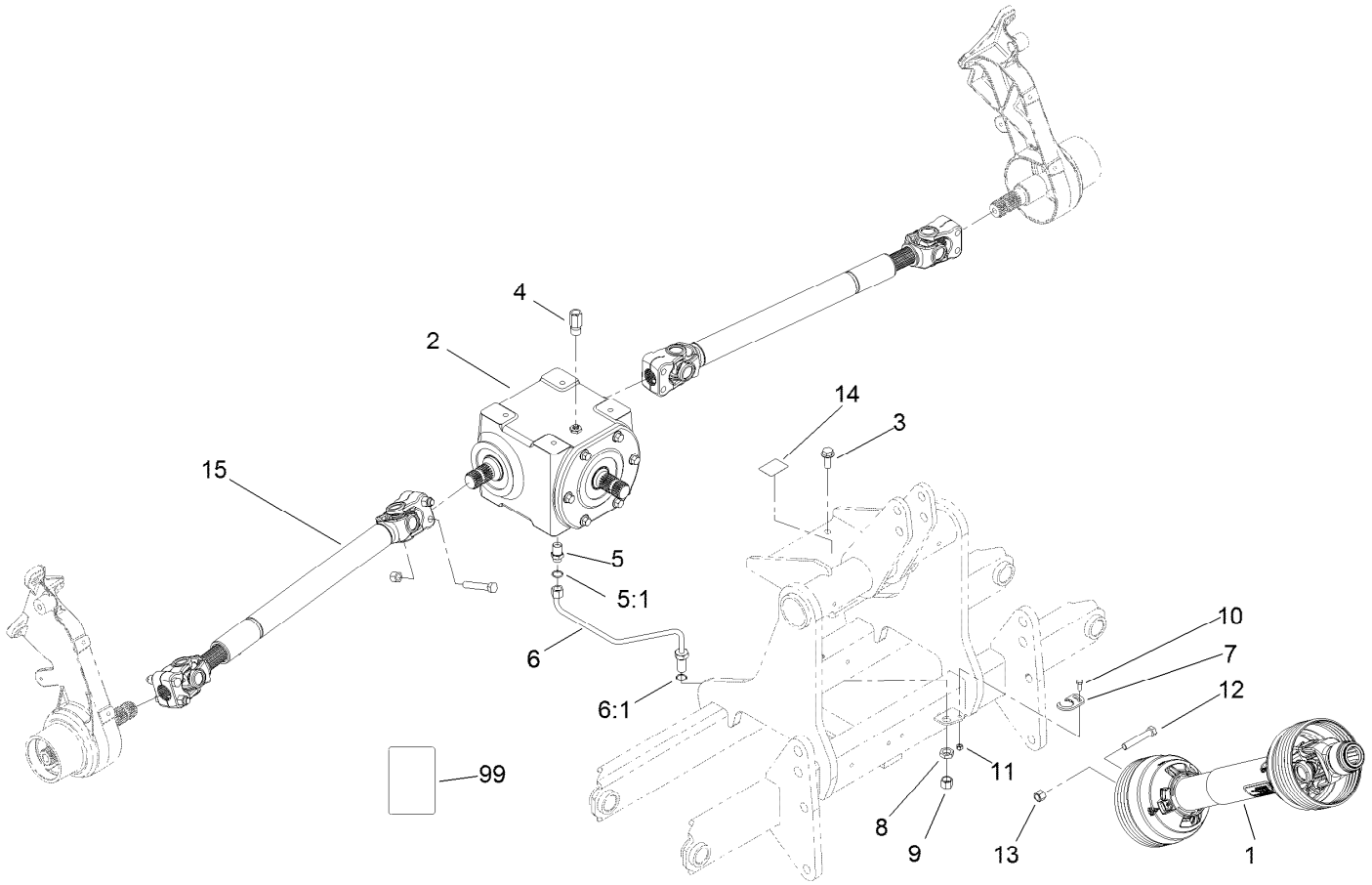

Gearbox and Driveline Assembly

Ref.	Part Number	Qty.	Description
1	110-4283	1	Shielded Driveshaft ASM
2	110-4565	1	Gearbox-T
3	3234-38	4	Screw-HHF
4	110-4590	1	Fitting-Reducer
5	340-124	1	Adapter
5:1	237-22	1	O-Ring
6	110-4336	1	Tube ASM
6:1	237-22	1	O-Ring
7	110-4553	1	Keeper-Hardline
8	340-70	1	Nut-Lock

Ref.	Part Number	Qty.	Description
9	340-117	1	Cap
10	3229-1	1	Screw-CARR
11	3296-42	1	Nut-Lock, NI
12	325-12	9	Screw-HH
13	3296-23	9	Nut-Lock, NI
14	110-4665	1	Decal-Service, Oil
15	110-4586	2	Drive Shaft ASM
99	138-9038	1	Decal-Danger, Entanglement

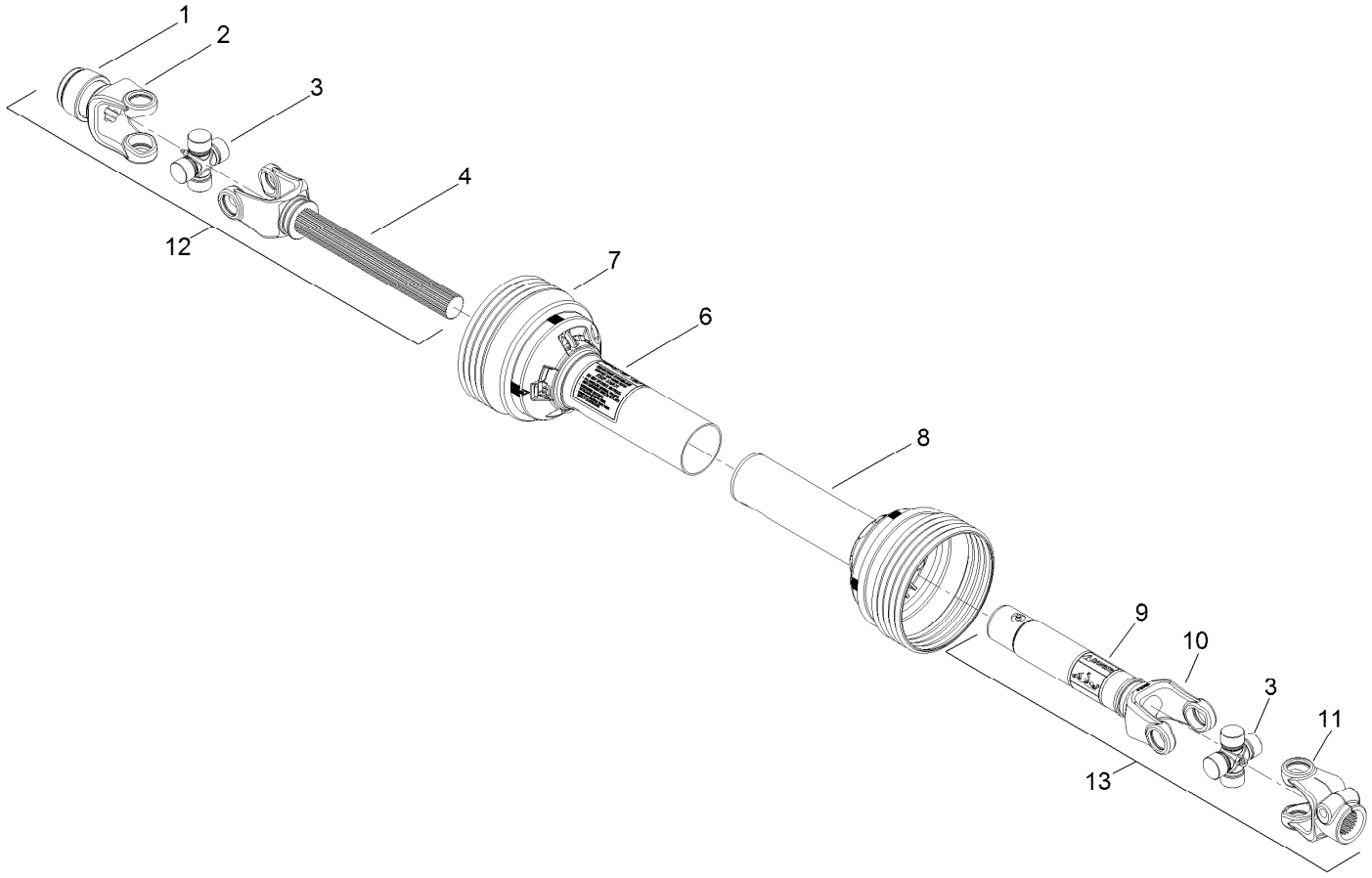

Shielded Drive Shaft Assembly No. 110-4283

Ref.	*Part Number*	*Qty.*	*Description*
1	93-4636	1	Auto-Lok Repair Kit
2		1	Safety Slide Lock Yoke ASM ■
3	110-4635	2	Cross And Bearing Kit
4		1	Yoke And Shaft ASM ■
5	110-4636	2	Guard Repair Kit ●
6	92-1581	1	Decal-Safety
7	110-4637	1	Guard-Outer
8	110-4638	1	Guard-Inner
9	92-1582	1	Decal-Safety
10		1	Yoke And Tube ASM ■
11		1	Yoke ■
12	110-4633	1	Joint And Shaft Half ASM
13	110-4634	1	Joint And Tube Half ASM

● Not illustrated

■ Not serviced separately

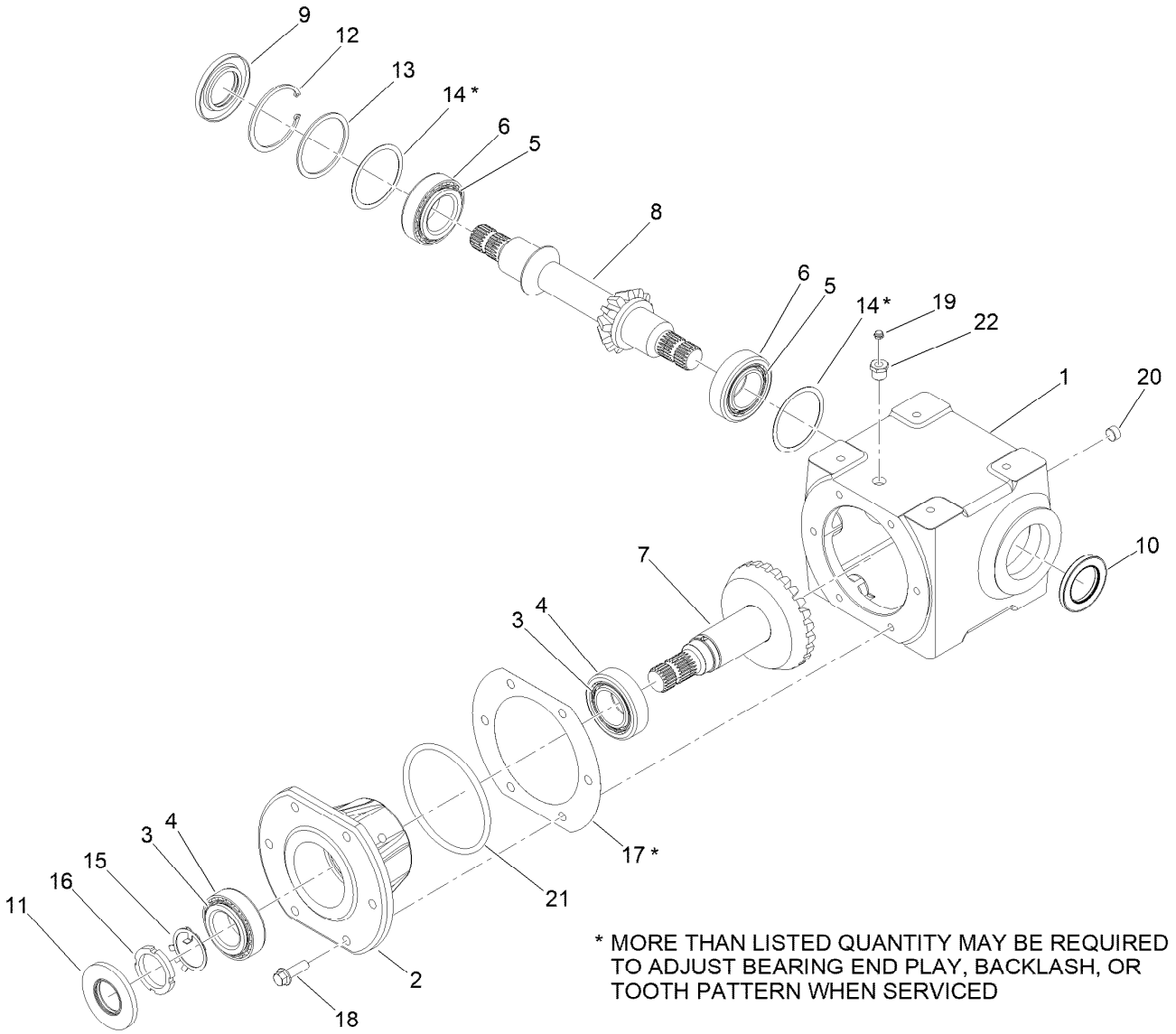

Gearbox Assembly No. 110-4565

Ref.	Part Number	Qty.	Description
1	110-4644	1	Housing
2	110-4645	1	Quill
3	110-4646	2	Cone-Bearing
4	110-4647	2	Cup-Bearing
5	110-4648	2	Cone-Bearing
6	110-4649	2	Cup-Bearing
7	110-4650	1	Gear And Shaft ASM
8	110-4651	1	Shaft-Cross
9	110-4652	1	Seal-Viton
10	110-4653	1	Seal-Viton
11	110-4654	1	Seal-Viton

Ref.	Part Number	Qty.	Description
12	110-4655	1	Ring-Retaining
13	110-4656	1	Shim-Hard
14	110-4657	2	Shim-Soft
15	110-4658	1	Shim-Retaining
16	110-4659	1	Nut-Lock
17	110-4660	1	Gasket
18	33106-045	6	Screw-HHF
19	110-4661	1	Vent-Relief
20	281-3	1	Plug-Pipe, SQH
21	110-4662	1	O-Ring
22	140-2251	1	Adapter

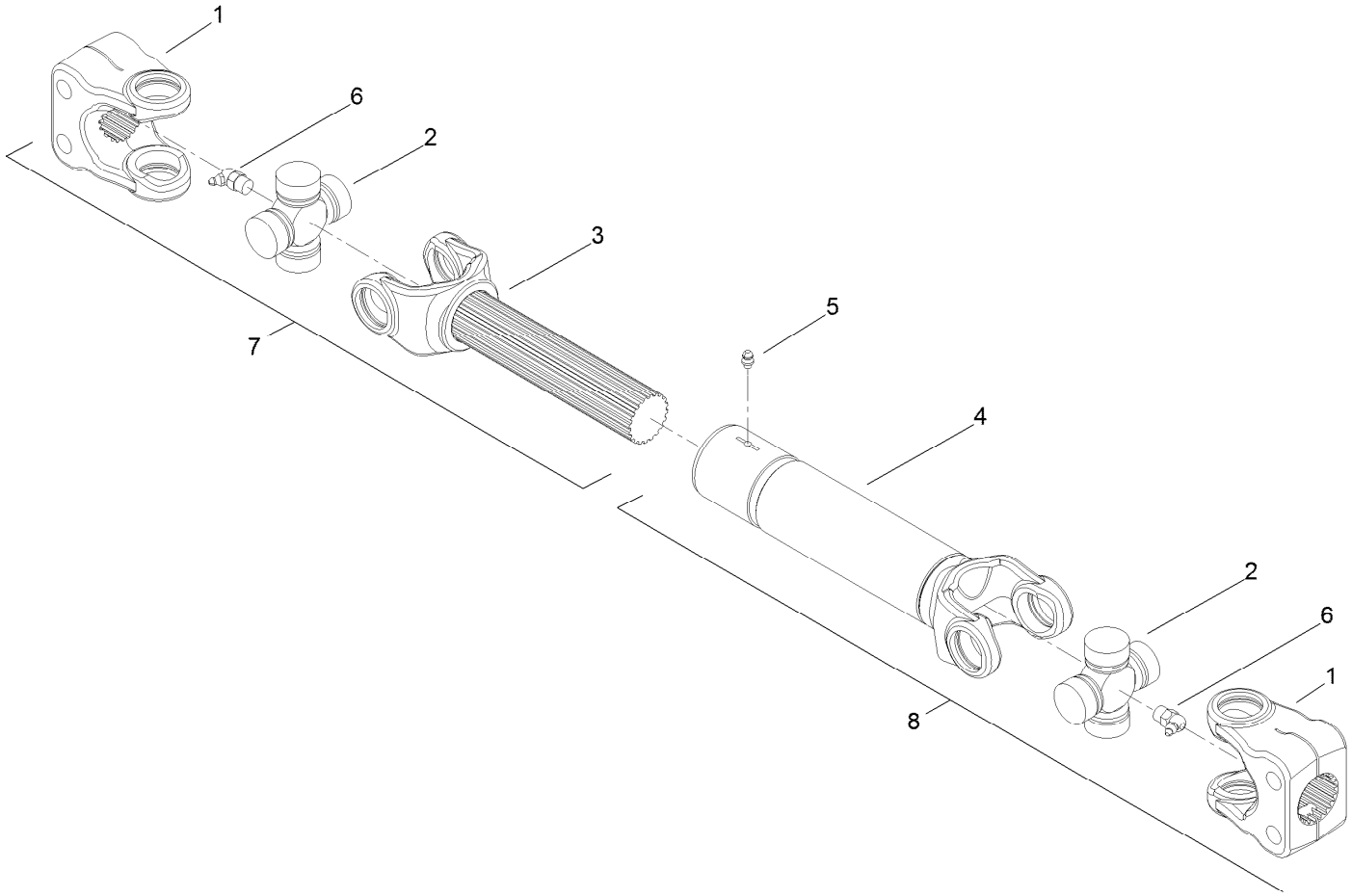

Drive Shaft Assembly No. 110-4586

Ref.	*Part Number*	*Qty.*	*Description*
1		1	Yoke ●
2	110-4641	2	Cross And Bearing Kit
3		1	Yoke And Shaft ASM ●
4		1	Yoke And Tube ASM ●
5		1	Zerk-Grease ●
6		2	Zerk-Grease ●
7	110-4642	1	Joint And Shaft Half ASM
8	110-4643	1	Joint And Tube Half ASM

● Not serviced separately

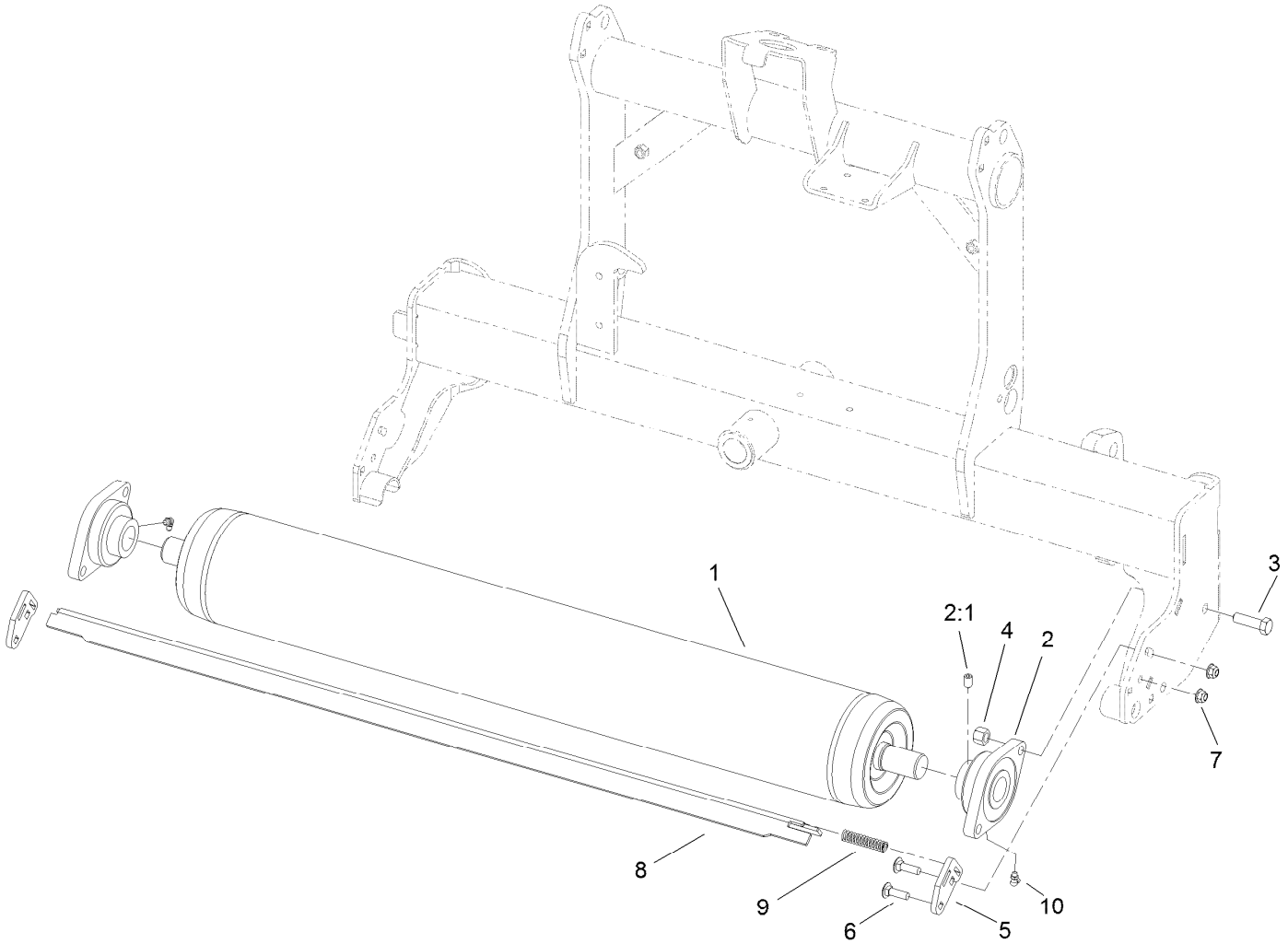

Right Hand Roller and Scraper Assembly

Ref.	*Part Number*	*Qty.*	*Description*
1	110-4253-03	1	Roller
2	105-0962	2	Bearing-Mount, Flange
2:1	3246-17	1	Setscrew-HSH
3	325-7	4	Screw-HH
4	3296-23	4	Nut-Lock, NI
5	110-4290	2	Arm-Scraper
6	3231-25	4	Bolt-CARR
7	104-8301	4	Nut-HF, NI
8	110-4289-03	1	Scraper-Roller
9	108-4469	1	Spring-Compression
10	302-40	2	Fitting-Grease, 90 DEG

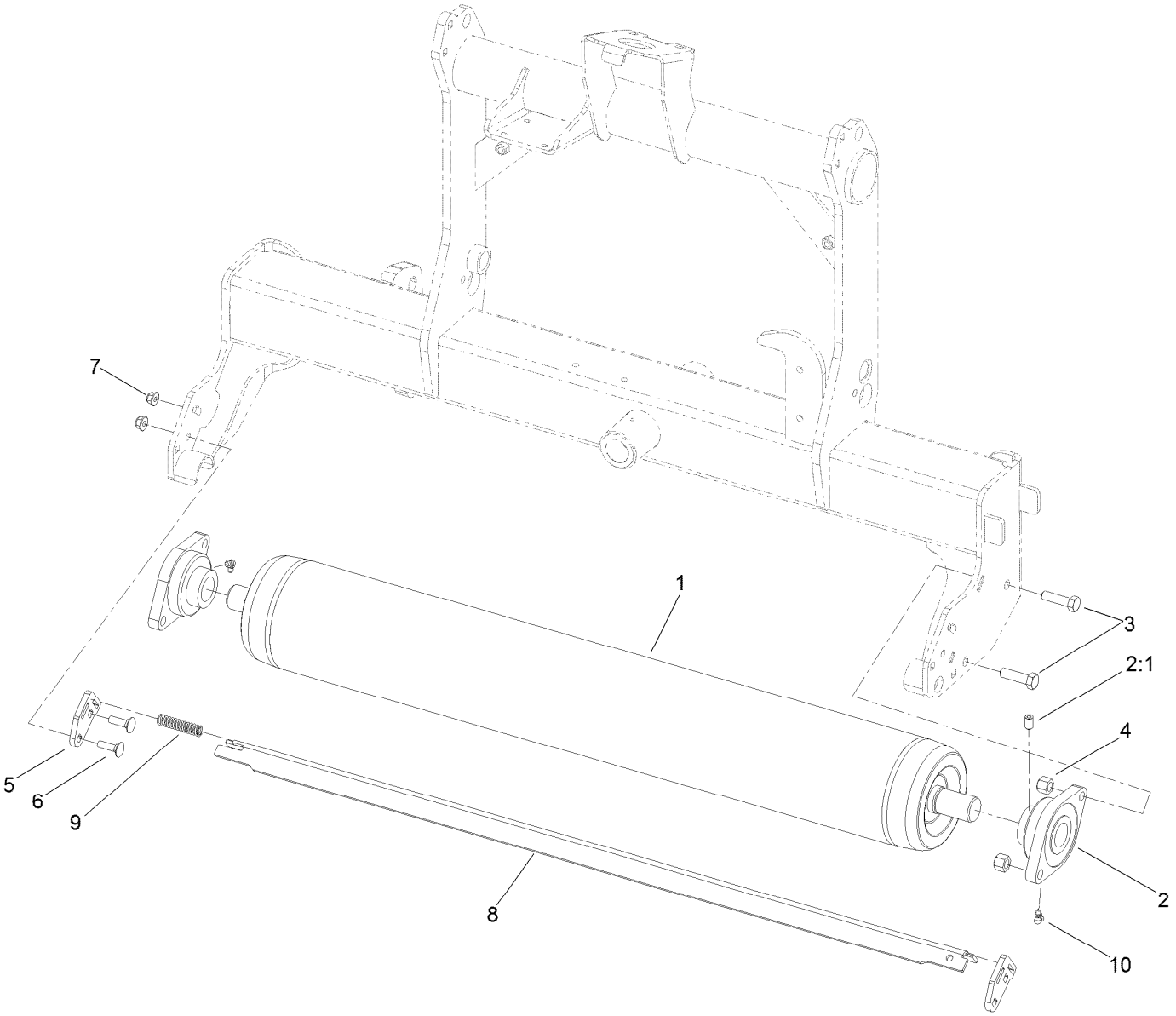

Left Hand Roller and Scraper Assembly

Ref.	*Part Number*	*Qty.*	*Description*
1	110-4253-03	1	Roller
2	105-0962	2	Bearing-Mount, Flange
2:1	3246-17	1	Setscrew-HSH
3	325-7	4	Screw-HH
4	3296-23	4	Nut-Lock, NI
5	110-4290	2	Arm-Scraper
6	3231-25	4	Bolt-CARR
7	104-8301	4	Nut-HF, NI
8	110-4289-03	1	Scraper-Roller
9	108-4469	1	Spring-Compression
10	302-40	2	Fitting-Grease, 90 DEG

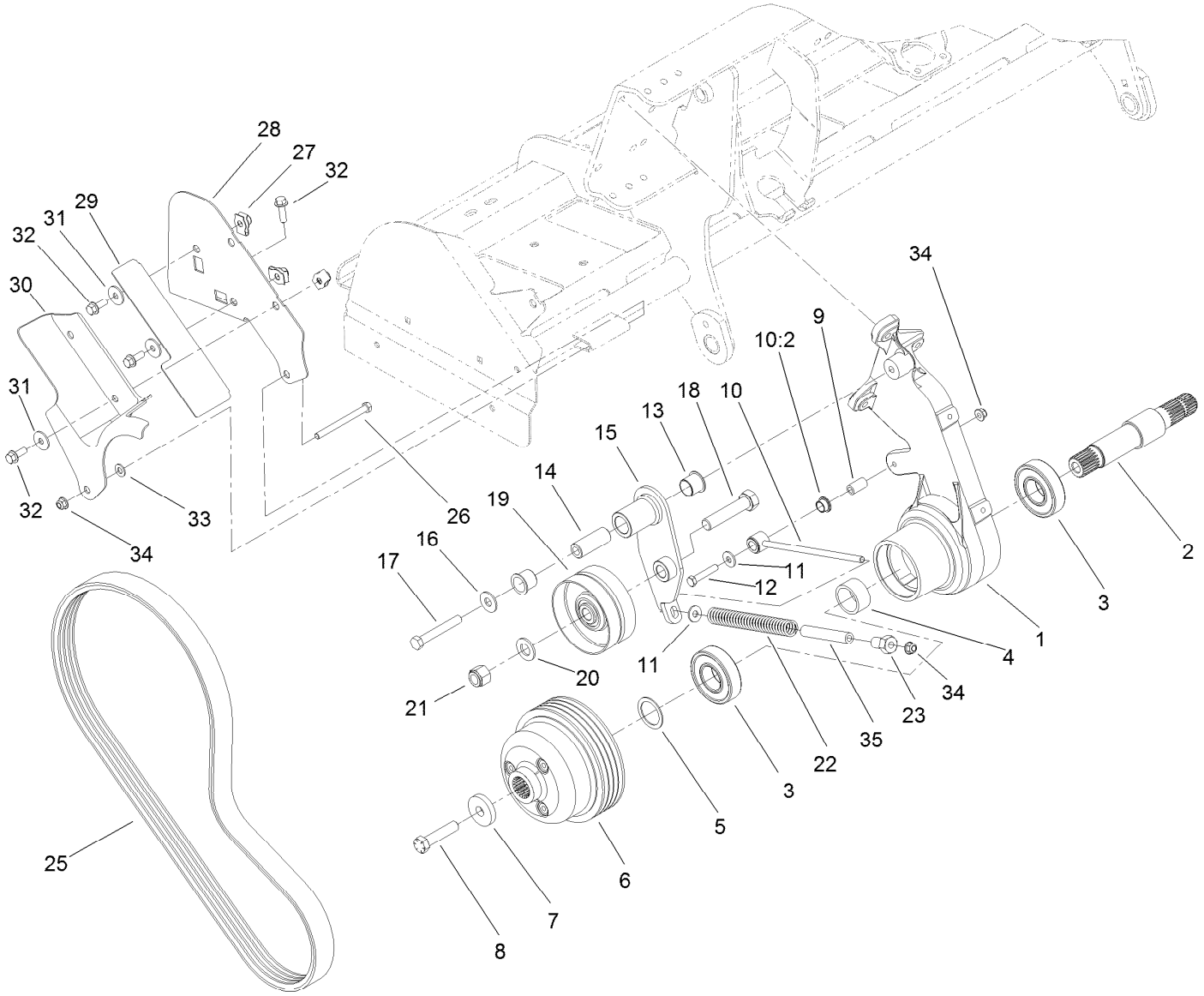

Right Hand Belt Drive Assembly

Ref.	Part Number	Qty.	Description
1	110-4445	1	Support-Pulley, RH
2	110-4527	1	Shaft-Pulley, Splined
3	106-8871	2	Bearing-Ball
4	110-4460	1	Spacer-Bearing
5	110-4498	1	Washer-Shim
6	110-4419	1	Pulley
7	105-1016	1	Washer-Hardened
8	110-4614	1	Screw-HH
9	110-4631	1	Tube-Spacer
10	115-2815	1	Idler Arm ASM
10:2	80-1290	2	Bushing
11	80-6990	2	Washer-Hardened
12	323-11	1	Screw-HH
13	126-1963	2	Bushing-Pivot
14	105-0945	1	Sleeve-Pivot
15	110-4624-03	1	Arm-Idler, RH
16	3256-6	1	Washer-Flat
17	325-14	1	Screw-HH

Ref.	Part Number	Qty.	Description
18	328-5	1	Screw-HH
19	100-7631	1	Pulley-Idler
20	3256-28	1	Washer-Flat
21	3296-51	1	Nut-Lock, NI
22	110-4632	1	Spring-Compression
23	110-4676	1	Nut-Idler
25	110-4327	1	Belt-Banded, 4 Groove
26	323-17	1	Screw-HH
27	105-4886	4	Nut-Tinnerman
28	110-4476-03	1	Support-Guard, Belt
29	114-1463-03	1	Shield-Dirt, RH
30	110-4474	1	Guard-Belt, RH
31	93-8806	4	Washer-Hardened
32	3234-24	6	Screw-HHF
33	3256-24	1	Washer-Flat
34	104-8301	3	Nut-HF, NI
35	115-2800	1	Hose

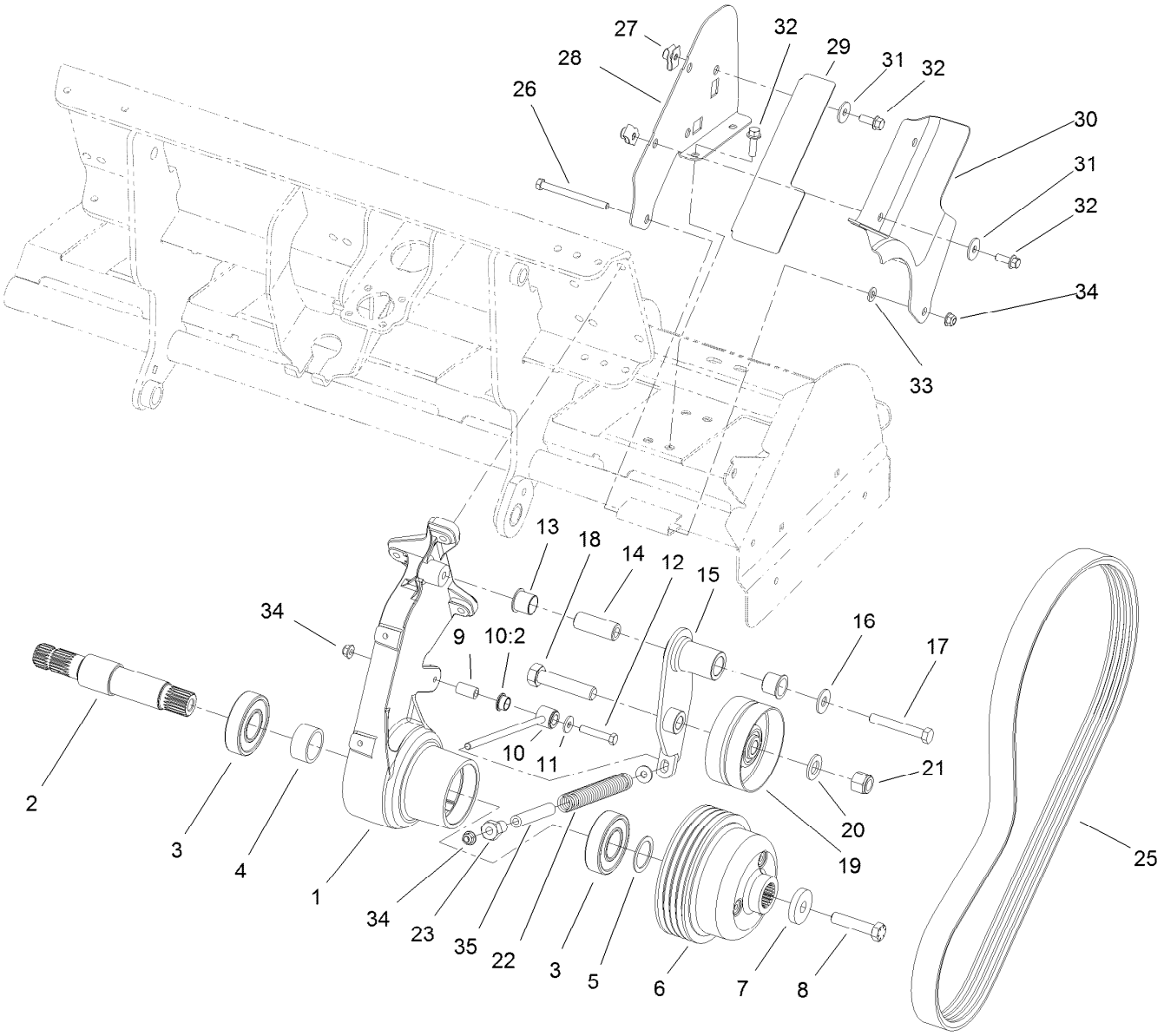

Left Hand Belt Drive Assembly

Ref.	Part Number	Qty.	Description
1	110-4447	1	Support-Pulley, LH
2	110-4527	1	Shaft-Pulley, Splined
3	106-8871	2	Bearing-Ball
4	110-4460	1	Spacer-Bearing
5	110-4498	1	Washer-Shim
6	110-4419	1	Pulley
7	105-1016	1	Washer-Hardened
8	110-4614	1	Screw-HH
9	110-4631	1	Tube-Spacer
10	115-2815	1	Idler Arm ASM
10:2	80-1290	2	Bushing
11	80-6990	2	Washer-Hardened
12	323-11	1	Screw-HH
13	126-1963	2	Bushing-Pivot
14	105-0945	1	Sleeve-Pivot
15	110-4625-03	1	Arm-Idler, LH
16	3256-6	1	Washer-Flat
17	325-14	1	Screw-HH

Ref.	Part Number	Qty.	Description
18	328-5	1	Screw-HH
19	100-7631	1	Pulley-Idler
20	3256-28	1	Washer-Flat
21	3296-51	1	Nut-Lock, NI
22	110-4632	1	Spring-Compression
23	110-4676	1	Nut-Idler
25	110-4327	1	Belt-Banded, 4 Groove
26	323-17	1	Screw-HH
27	105-4886	4	Nut-Tinnerman
28	110-4476-03	1	Support-Guard, Belt
29	114-1464-03	1	Shield-Dirt, LH
30	110-4475	1	Guard-Belt, LH
31	93-8806	4	Washer-Hardened
32	3234-24	6	Screw-HHF
33	3256-24	1	Washer-Flat
34	104-8301	3	Nut-HF, NI
35	115-2800	1	Hose

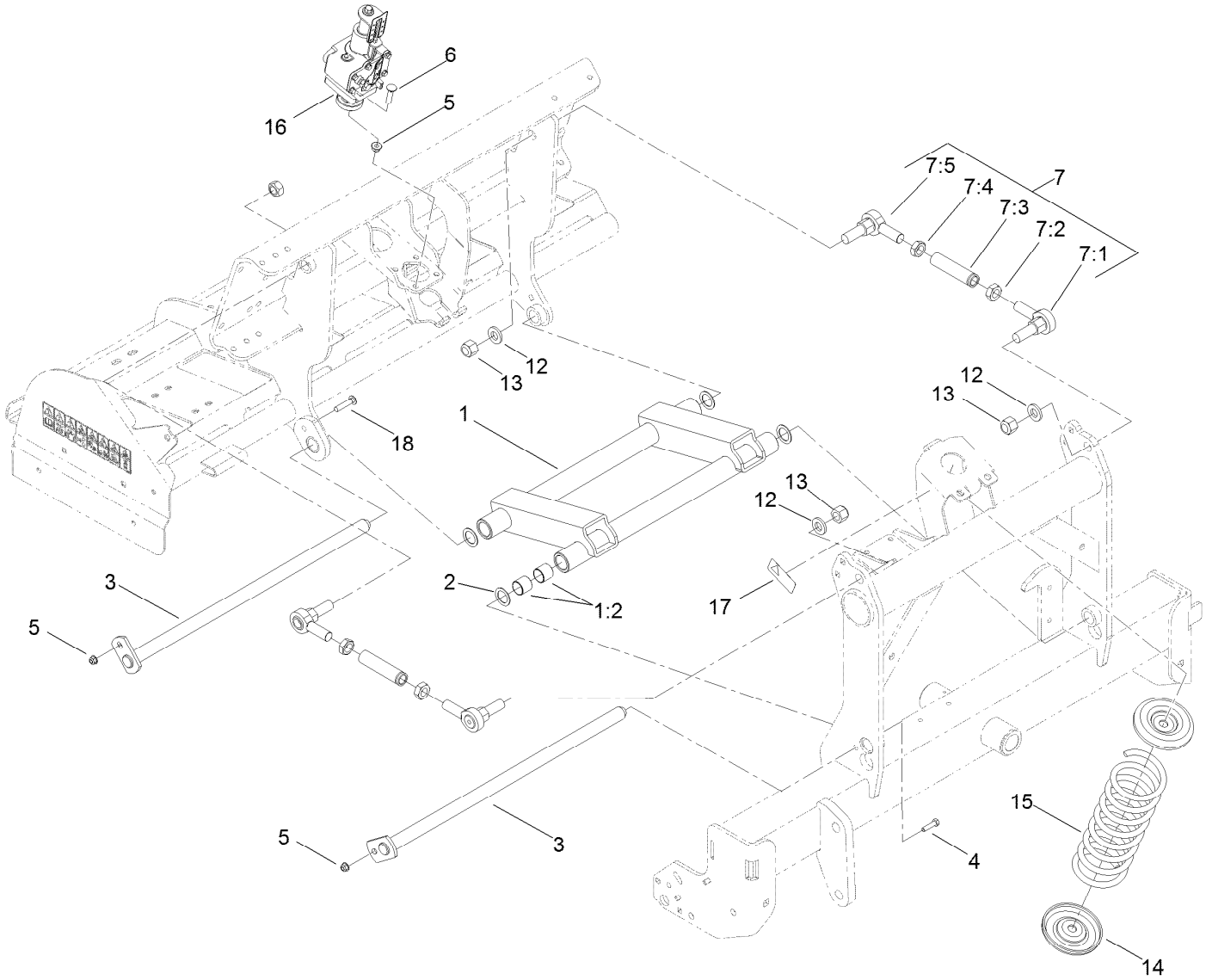

Right Hand H-Frame Assembly

Ref.	Part Number	Qty.	Description
1	110-4618	1	H-Frame ASM
1:2	110-4612	8	Bushing-Straight
2	10-8110	4	Washer-Thrust
3	110-4456	2	Shaft-Pivot
4	323-7	1	Screw-HH
5	104-8301	6	Nut-HF, NI
6	3231-4	4	Screw-CARR
7	115-2821	2	Link ASM
7:1	105-1025	1	End-Rod
7:2	3220-17	1	Nut-Jam, LH

Ref.	Part Number	Qty.	Description
7:3	110-4251	1	Link-Upper
7:4	3220-7	1	Nut-Jam
7:5	2411-40	1	End-Rod
12	92-5836	3	Washer
13	3296-50	4	Nut-Lock, NI
14	110-4287-03	2	Cup-Spring
15	140-2566	1	Spring-Compression
16	115-2844	1	Depth Control ASM
17	93-6696	1	Decal-Warning
18	3231-5	1	Screw-CARR

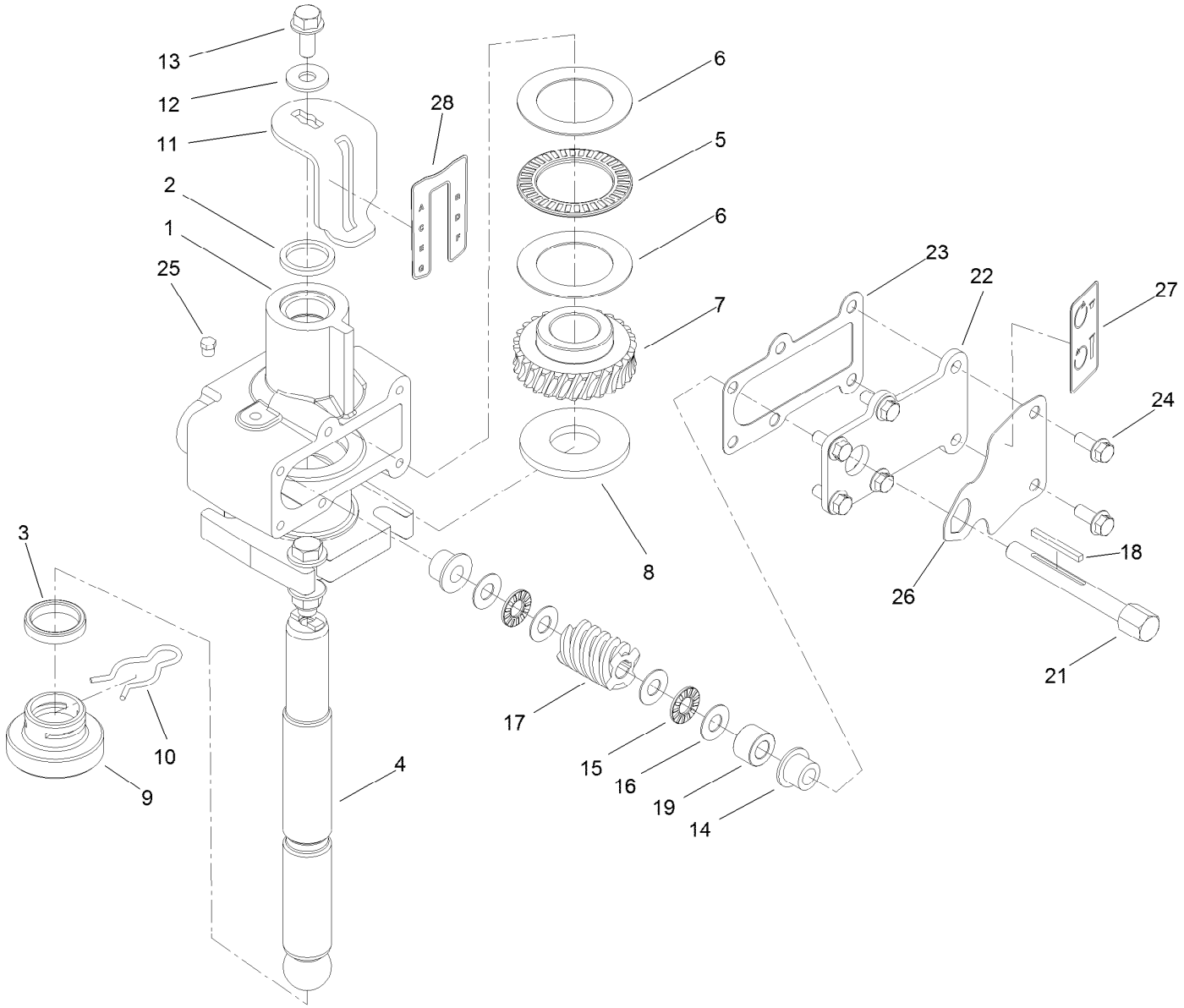

Depth Control Assembly No. 115-2844

Ref.	Part Number	Qty.	Description
1	110-4531	1	Hub-Control, Depth
2	253-59	1	Seal-Oil
3	7-0045	1	Seal-Oil
4	110-4534	1	Shaft-Control, Depth
5	110-4600	1	Bearing-Thrust
6	110-4602	2	Washer-Bearing
7	110-4582	1	Gear-Worm, Depth Control
8	112-4953	1	Washer-Plain
9	110-4438	1	Shoe-Control, Depth
10	110-4439	1	Clip-Hairpin
11	110-4533	1	Gage-Control, Depth
12	3256-71	1	Washer-Flat
13	3234-5	1	Screw-HHF
14	110-4674	2	Bushing-Flange

Ref.	Part Number	Qty.	Description
15	110-4599	2	Bearing-Thrust
16	73-0041	4	Washer-Thrust
17	110-4581	1	Worm-Control, Depth
18	110-4536	1	Key-Gear, Worm
19	110-4537	1	Spacer-Gear, Worm
21	110-4580	1	Shaft-Gear, Worm
22	110-4532-03	1	Cover-Control, Depth
23	110-4578	1	Gasket-Control, Depth
24	3234-33	6	Screw-HHF
25	302-59	1	Plug-EXT Hex Spl
26	110-4604	1	Plate-Lock, Depth
27	110-4677	1	Decal-Rotation, Depth
28	110-4678	1	Decal-Designation, Depth

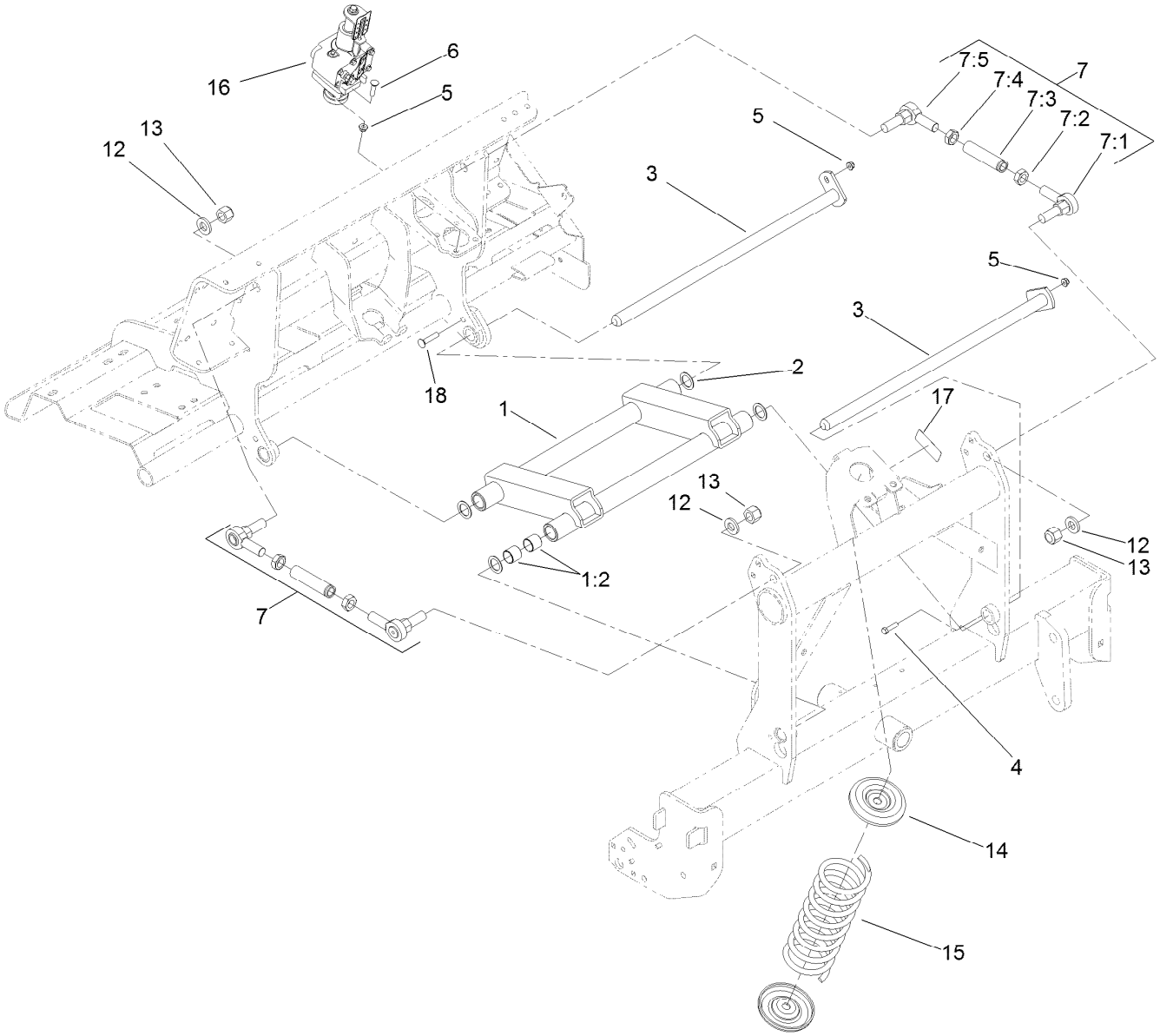

Left Hand H-Frame Assembly

Ref.	Part Number	Qty.	Description
1	110-4618	1	H-Frame ASM
1:2	110-4612	8	Bushing-Straight
2	10-8110	4	Washer-Thrust
3	110-4456	2	Shaft-Pivot
4	323-7	1	Screw-HH
5	104-8301	6	Nut-HF, NI
6	3231-4	4	Screw-CARR
7	115-2821	2	Link ASM
7:1	105-1025	1	End-Rod
7:2	3220-17	1	Nut-Jam, LH

Ref.	Part Number	Qty.	Description
7:3	110-4251	1	Link-Upper
7:4	3220-7	1	Nut-Jam
7:5	2411-40	1	End-Rod
12	92-5836	3	Washer
13	3296-50	4	Nut-Lock, NI
14	110-4287-03	2	Cup-Spring
15	140-2566	1	Spring-Compression
16	115-2844	1	Depth Control ASM
17	93-6696	1	Decal-Warning
18	3231-5	1	Screw-CARR

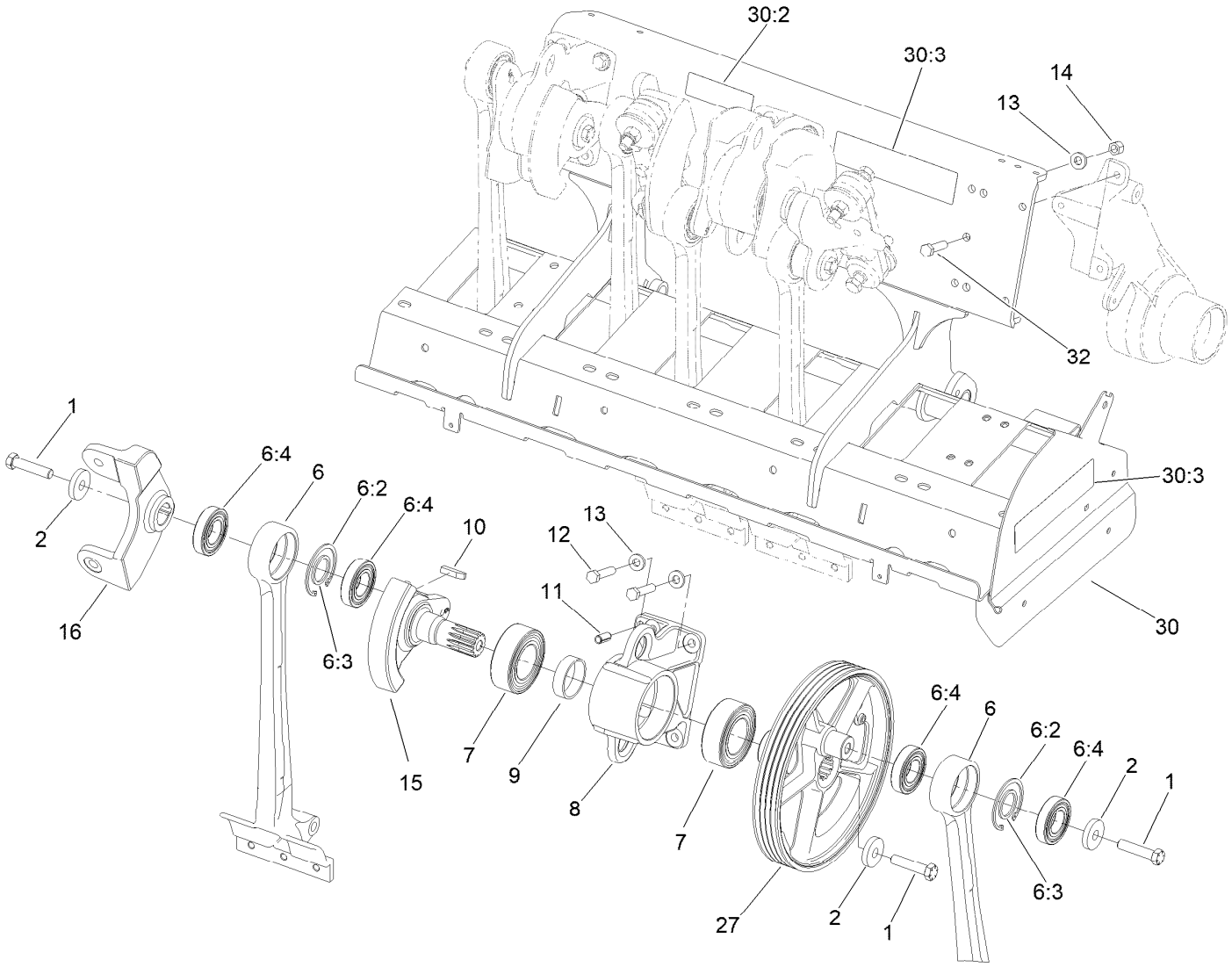

Right Hand No. 1 and No. 2 Crankarm Assembly

Ref.	Part Number	Qty.	Description
1	110-4614	3	Screw-HH
2	105-1016	3	Washer-Hardened
6	140-8809	2	Stomper Arm ASM
6:2	32151-76	1	Ring-Retaining, Internal
6:3	110-4557	1	Spacer-Bearing
6:4	140-8808	2	Bearing
7	110-4555	2	Bearing-Ball, 2 Row
8	110-4566	1	Housing-Bearing
9	110-4584	1	Spacer-Bearing
10	110-4546	1	Key-Square
11	105-1041	2	Pin-Spring

Ref.	Part Number	Qty.	Description
12	325-9	4	Screw-HH
13	107-3395	7	Washer-Hardened
14	3296-23	2	Nut-Lock, NI
15	110-4571	1	Crankarm-No. 2, 4, 6
16	110-4567	1	Coupling-No. 2
27	114-1458	1	Pulley-Crankshaft
30	110-4685	1	RH Coring Head Frame ASM
30:2	140-2269	1	Decal-Service, CE
30:3	110-4670	2	Decal-Warning, CE
32	325-8	1	Screw-HH

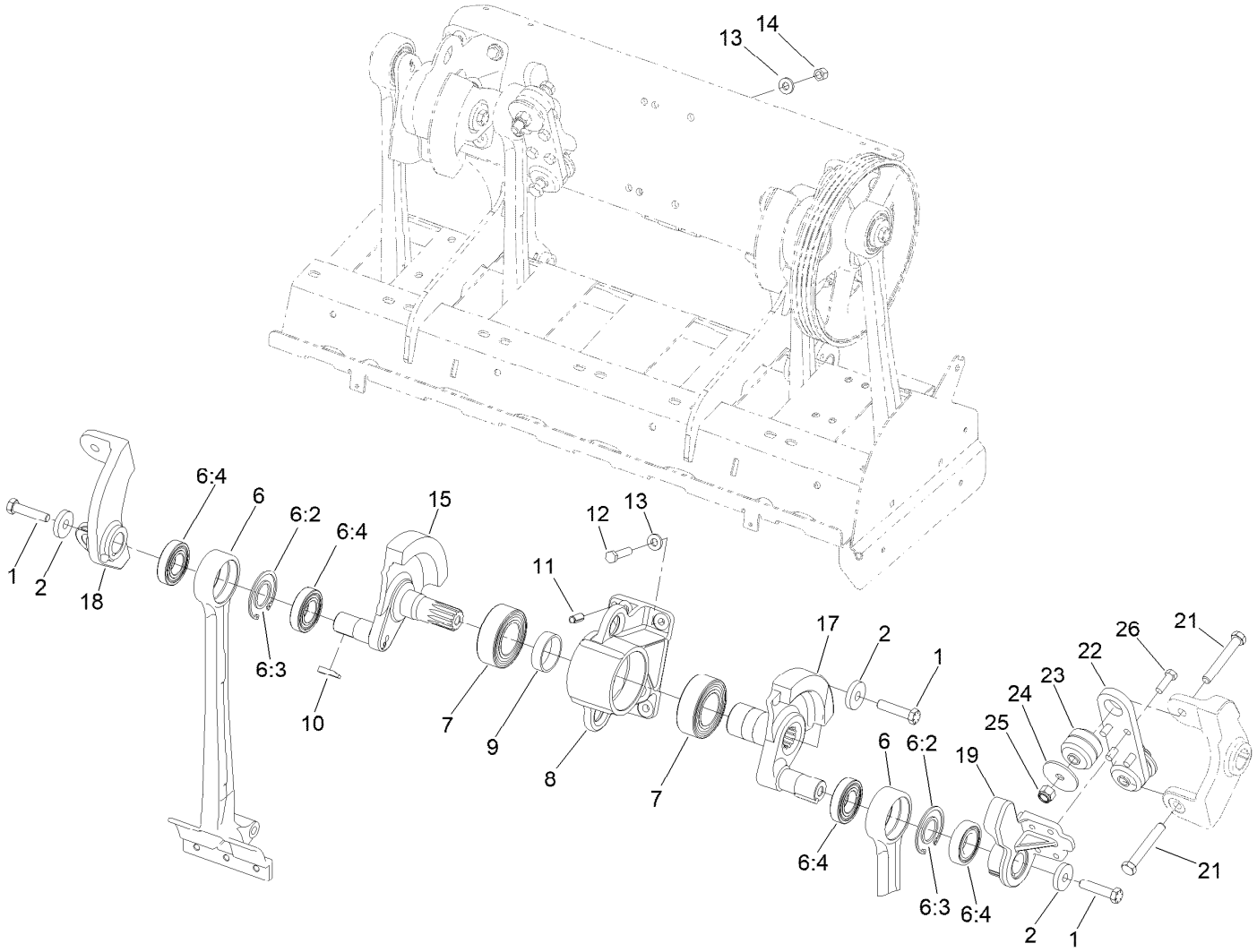

Right Hand No. 3 and No. 4 Crankarm Assembly

Ref.	Part Number	Qty.	Description
1	110-4614	3	Screw-HH
2	105-1016	3	Washer-Hardened
6	140-8809	2	Stomper Arm ASM
6:2	32151-76	1	Ring-Retaining, Internal
6:3	110-4557	1	Spacer-Bearing
6:4	140-8808	2	Bearing
7	110-4555	2	Bearing-Ball, 2 Row
8	110-4566	1	Housing-Bearing
9	110-4584	1	Spacer-Bearing
10	110-4546	2	Key-Square
11	105-1041	2	Pin-Spring
12	325-9	4	Screw-HH

Ref.	Part Number	Qty.	Description
13	107-3395	8	Washer-Hardened
14	3296-23	4	Nut-Lock, NI
15	110-4571	1	Crankarm-No. 2, 4, 6
17	110-4572	1	Crankarm-No. 3, 5, 7
18	110-4569	1	Coupling-No.4
19	110-4568	1	Coupling-No. 3
21	327-29	2	Screw-HH
22	105-0974-03	1	Plate-Coupling
23	105-0963	2	Mount-ISO, Crank
24	110-4549	2	Washer-Snubbing
25	3296-53	2	Nut-Lock, NI
26	325-6	4	Screw-HH

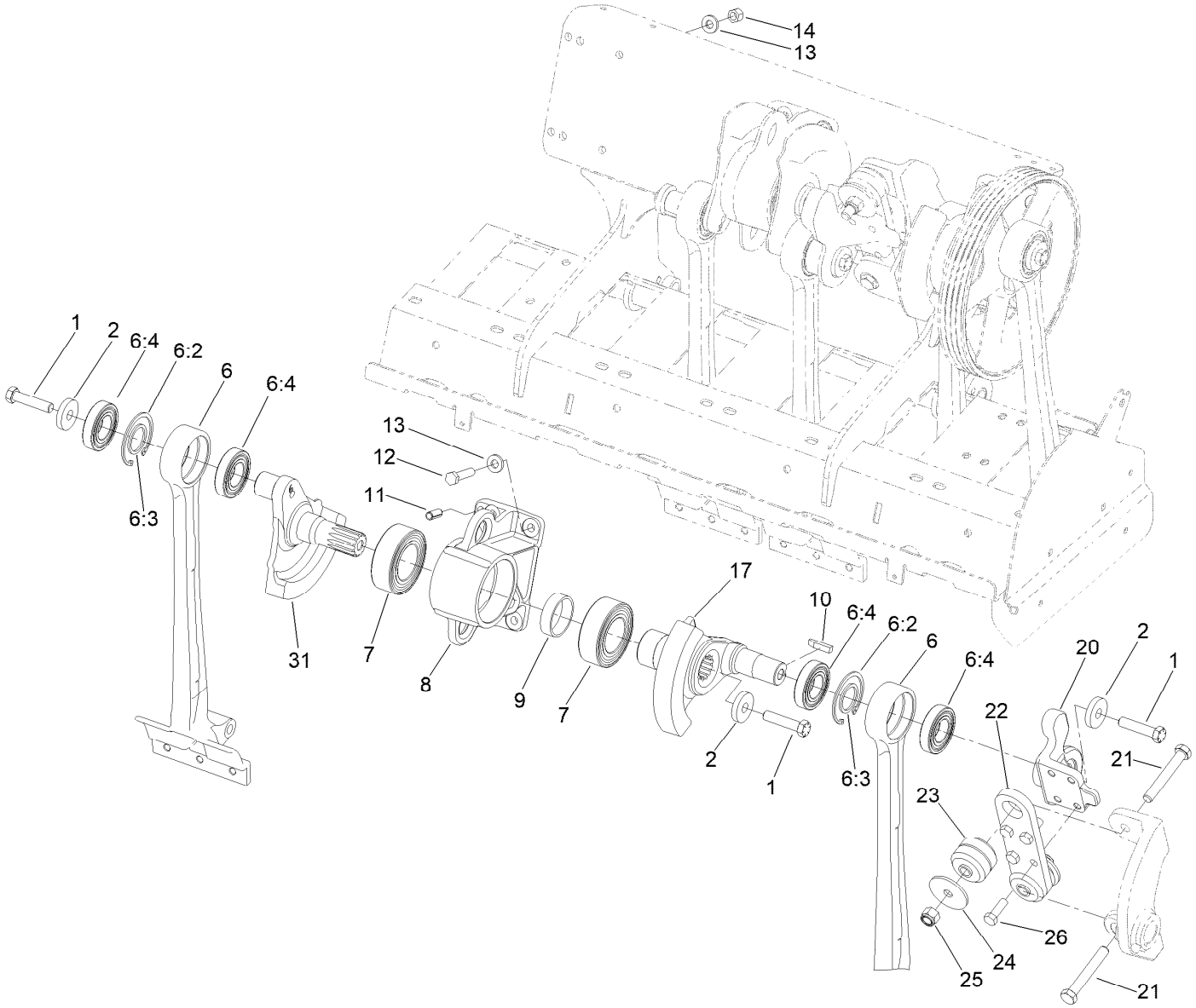

Right Hand No. 5 and No. 6 Crankarm Assembly

Ref.	Part Number	Qty.	Description
1	110-4614	3	Screw-HH
2	105-1016	3	Washer-Hardened
6	140-8809	2	Stomper Arm ASM
6:2	32151-76	1	Ring-Retaining, Internal
6:3	110-4557	1	Spacer-Bearing
6:4	140-8808	2	Bearing
7	110-4555	2	Bearing-Ball, 2 Row
8	110-4566	1	Housing-Bearing
9	110-4584	1	Spacer-Bearing
10	110-4546	1	Key-Square
11	105-1041	2	Pin-Spring
12	325-9	4	Screw-HH

Ref.	Part Number	Qty.	Description
13	107-3395	8	Washer-Hardened
14	3296-23	4	Nut-Lock, NI
17	110-4572	1	Crankarm-No. 3, 5, 7
20	110-4570	1	Coupling-N0.5
21	327-29	2	Screw-HH
22	105-0974-03	1	Plate-Coupling
23	105-0963	2	Mount-ISO, Crank
24	110-4549	2	Washer-Snubbing
25	3296-53	2	Nut-Lock, NI
26	325-6	4	Screw-HH
31	110-4576	1	Crankarm-No.6

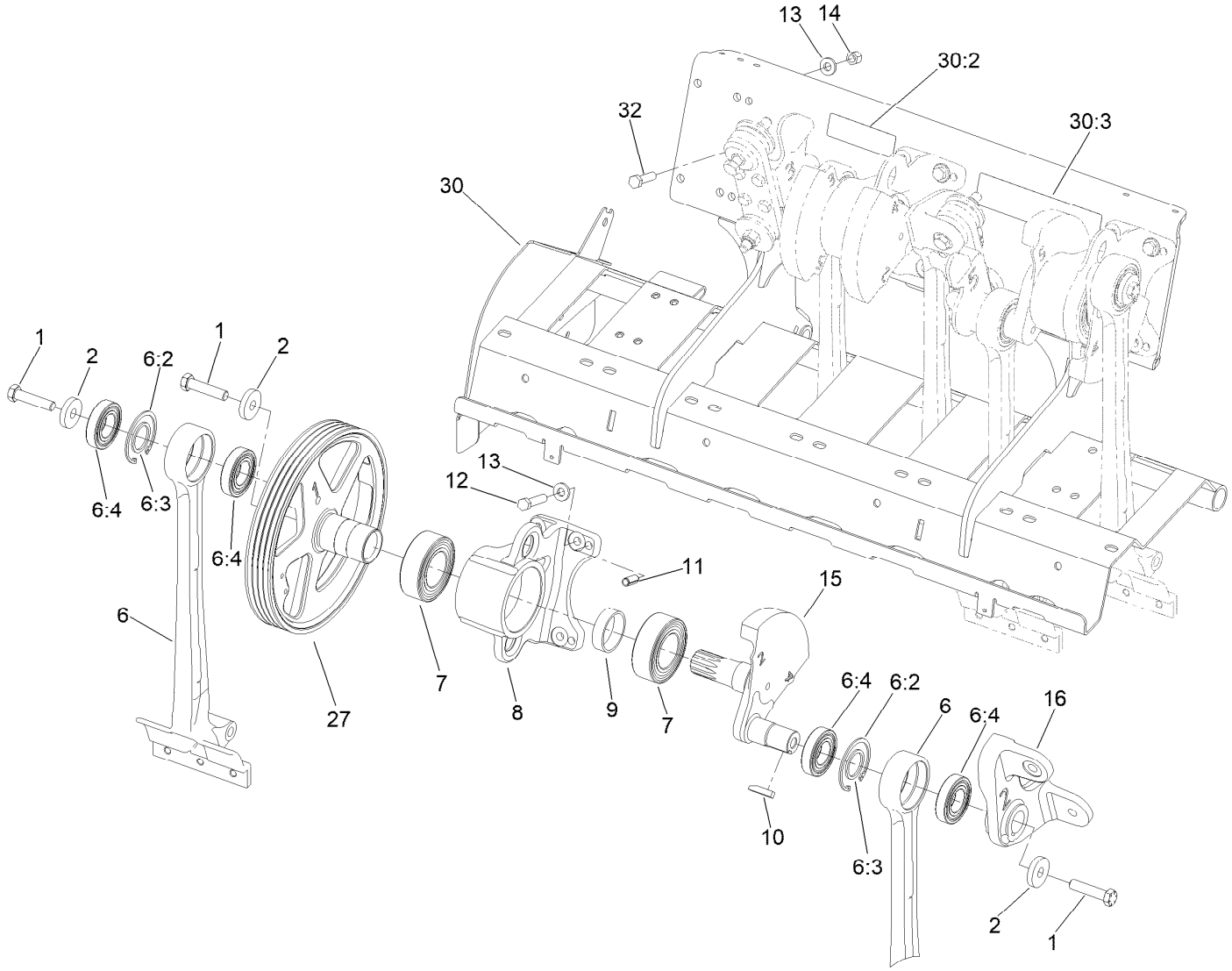

Left Hand No. 1 and No. 2 Crankarm Assembly

Ref.	Part Number	Qty.	Description
1	110-4614	3	Screw-HH
2	105-1016	3	Washer-Hardened
6	140-8809	2	Stomper Arm ASM
6:2	32151-76	1	Ring-Retaining, Internal
6:3	110-4557	1	Spacer-Bearing
6:4	140-8808	2	Bearing
7	110-4555	2	Bearing-Ball, 2 Row
8	110-4566	1	Housing-Bearing
9	110-4584	1	Spacer-Bearing
10	110-4546	1	Key-Square
11	105-1041	2	Pin-Spring

Ref.	Part Number	Qty.	Description
12	325-9	4	Screw-HH
13	107-3395	7	Washer-Hardened
14	3296-23	2	Nut-Lock, NI
15	110-4571	1	Crankarm-No. 2, 4, 6
16	110-4567	1	Coupling-No. 2
27	114-1458	1	Pulley-Crankshaft
30	110-4686	1	LH Coring Head Frame ASM
30:2	140-2269	1	Decal-Service, CE
30:3	110-4670	2	Decal-Warning, CE
32	325-8	1	Screw-HH

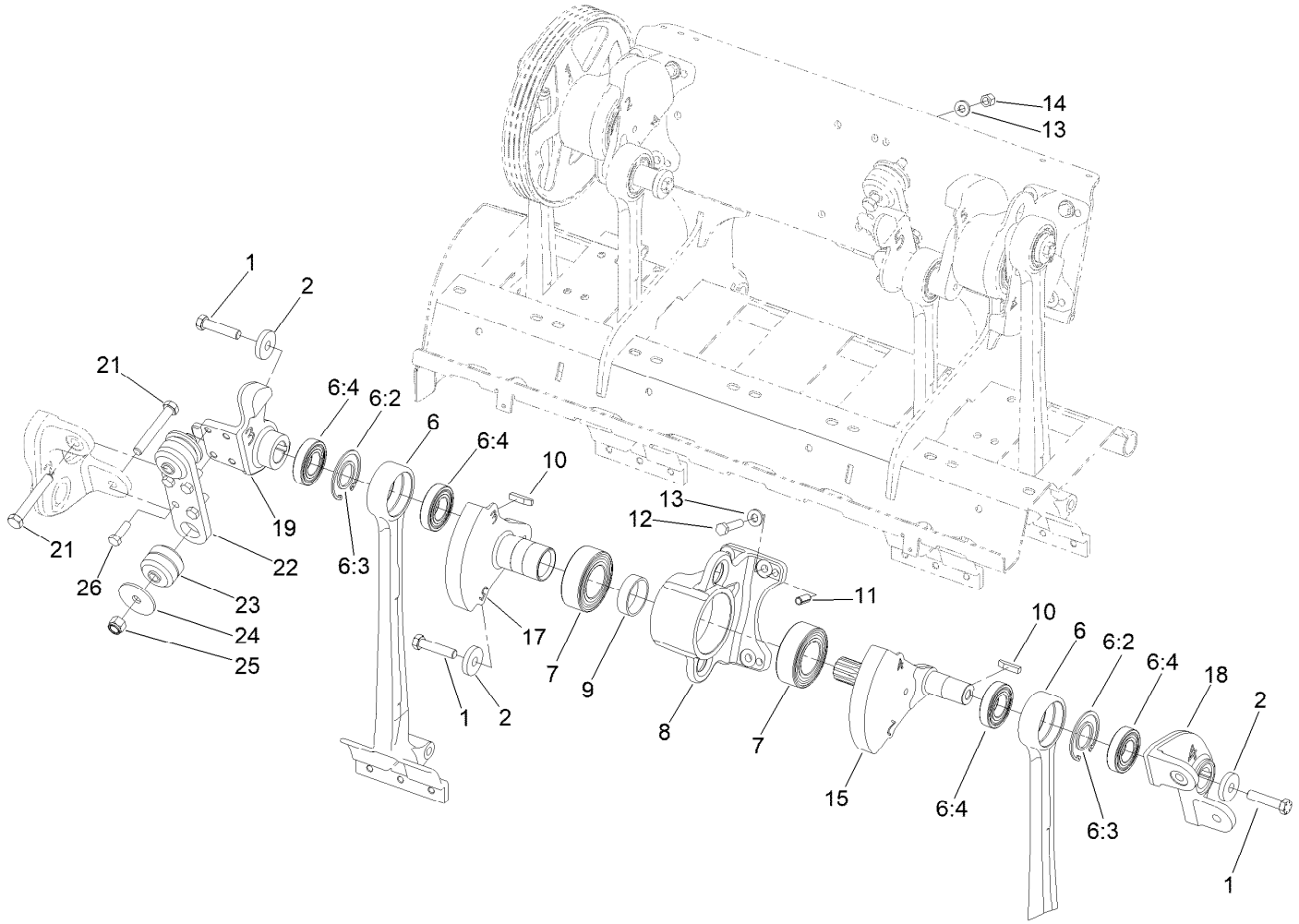

Left Hand No. 3 and No. 4 Crankarm Assembly

Ref.	Part Number	Qty.	Description
1	110-4614	3	Screw-HH
2	105-1016	3	Washer-Hardened
6	140-8809	2	Stomper Arm ASM
6:2	32151-76	1	Ring-Retaining, Internal
6:3	110-4557	1	Spacer-Bearing
6:4	140-8808	2	Bearing
7	110-4555	2	Bearing-Ball, 2 Row
8	110-4566	1	Housing-Bearing
9	110-4584	1	Spacer-Bearing
10	110-4546	2	Key-Square
11	105-1041	2	Pin-Spring
12	325-9	4	Screw-HH

Ref.	Part Number	Qty.	Description
13	107-3395	8	Washer-Hardened
14	3296-23	4	Nut-Lock, NI
15	110-4571	1	Crankarm-No. 2, 4, 6
17	110-4572	1	Crankarm-No. 3, 5, 7
18	110-4569	1	Coupling-No.4
19	110-4568	1	Coupling-No. 3
21	327-29	2	Screw-HH
22	105-0974-03	1	Plate-Coupling
23	105-0963	2	Mount-ISO, Crank
24	110-4549	2	Washer-Snubbing
25	3296-53	2	Nut-Lock, NI
26	325-6	4	Screw-HH

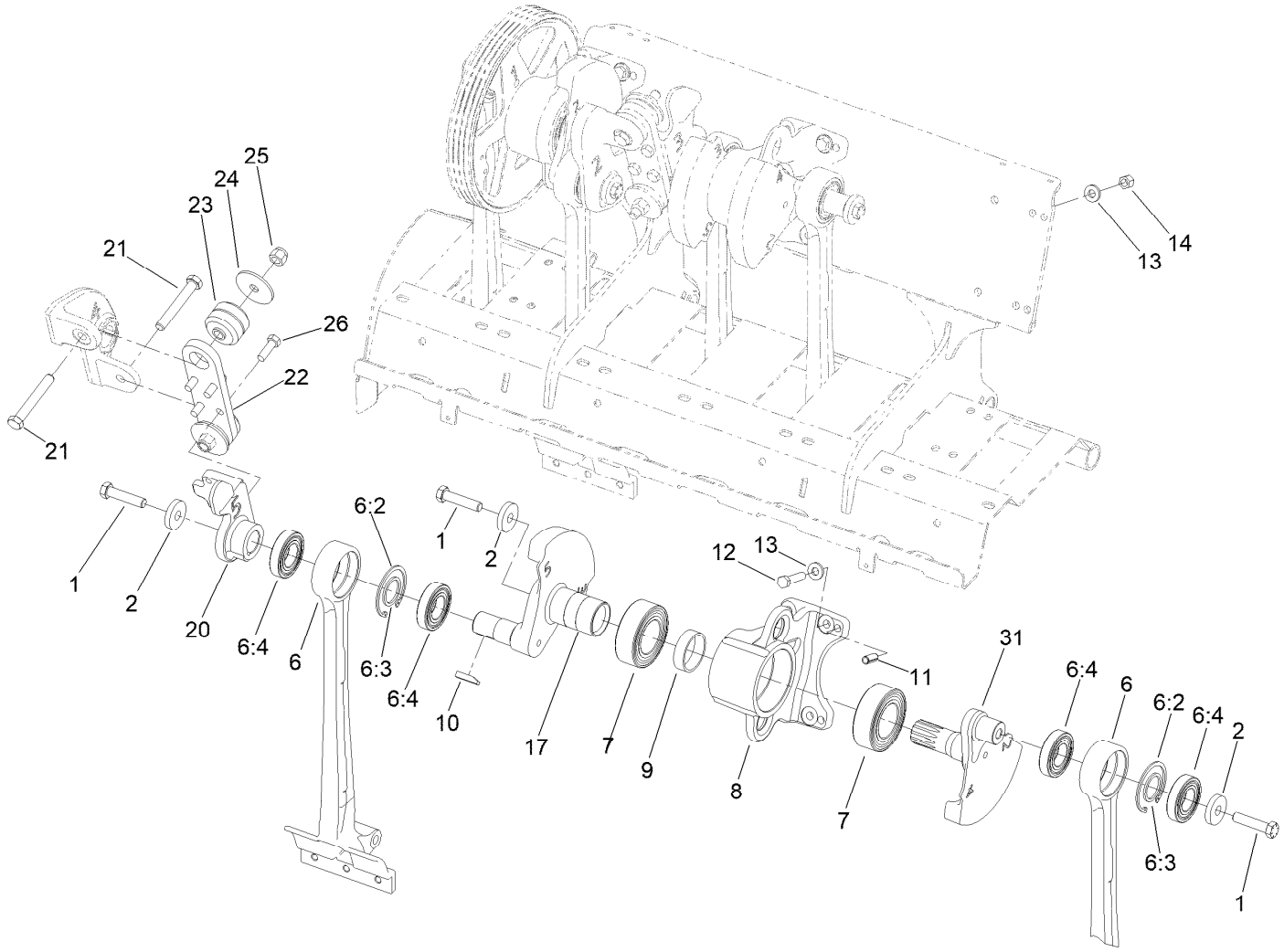

Left Hand No. 5 and No. 6 Crankarm Assembly

Ref.	Part Number	Qty.	Description
1	110-4614	3	Screw-HH
2	105-1016	3	Washer-Hardened
6	140-8809	2	Stomper Arm ASM
6:2	32151-76	1	Ring-Retaining, Internal
6:3	110-4557	1	Spacer-Bearing
6:4	140-8808	2	Bearing
7	110-4555	2	Bearing-Ball, 2 Row
8	110-4566	1	Housing-Bearing
9	110-4584	1	Spacer-Bearing
10	110-4546	1	Key-Square
11	105-1041	2	Pin-Spring
12	325-9	4	Screw-HH

Ref.	Part Number	Qty.	Description
13	107-3395	8	Washer-Hardened
14	3296-23	4	Nut-Lock, NI
17	110-4572	1	Crankarm-No. 3, 5, 7
20	110-4570	1	Coupling-N0.5
21	327-29	2	Screw-HH
22	105-0974-03	1	Plate-Coupling
23	105-0963	2	Mount-ISO, Crank
24	110-4549	2	Washer-Snubbing
25	3296-53	2	Nut-Lock, NI
26	325-6	4	Screw-HH
31	110-4576	1	Crankarm-No.6

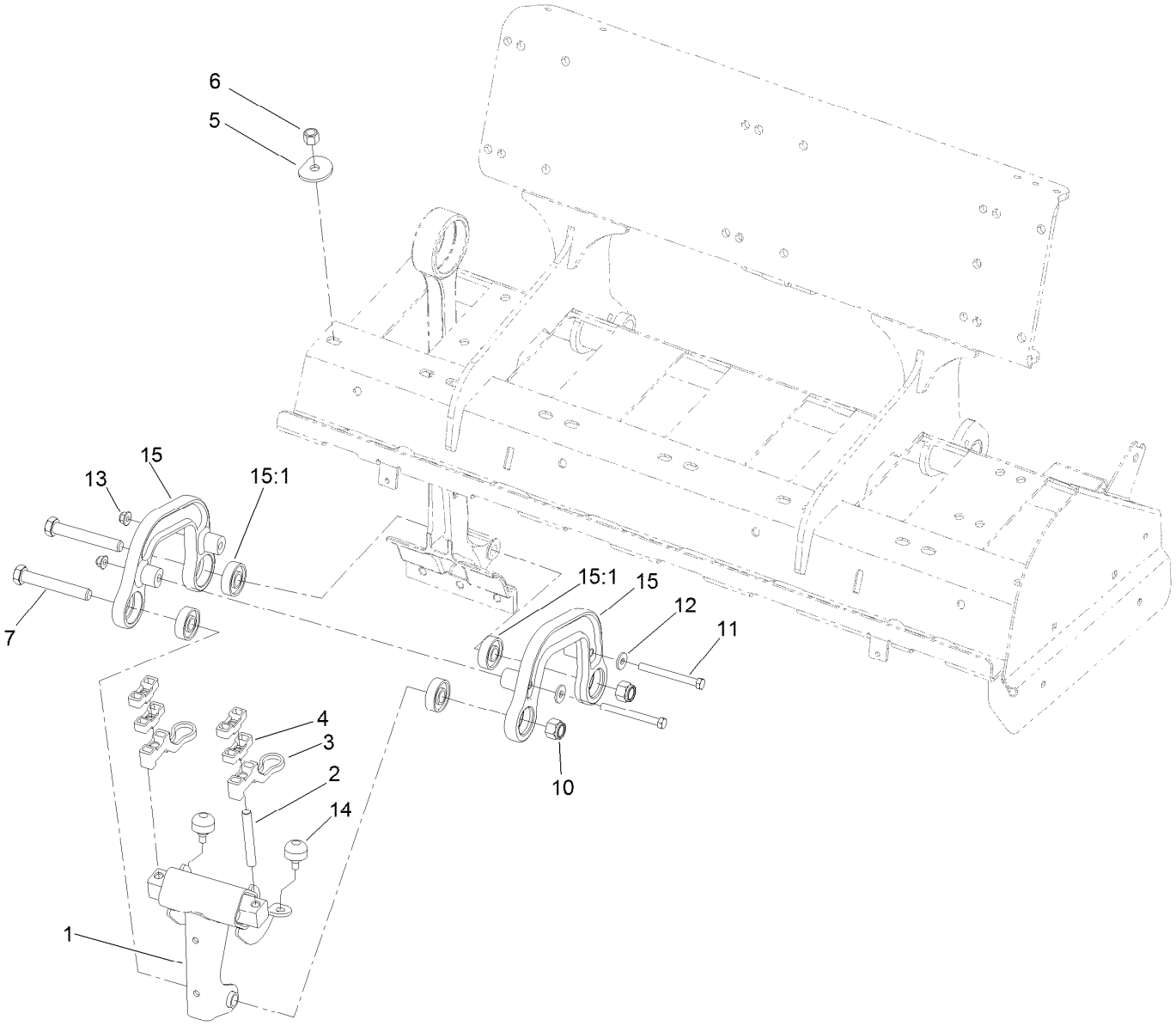

Roto-Link Damper Assembly

Ref.	*Part Number*	*Qty.*	*Description*
1	106-8922	12	Damper
2	110-4504	24	Stud
3	110-4506	24	Bumper-Rotolink
4	110-4507	48	Standoff-Rotolink
5	107-7543	24	Washer-Hardened
6	32128-23	24	Nut-HF
7	327-29	24	Screw-HH
10	3296-53	24	Nut-Lock, NI
11	323-42	24	Screw-HH
12	80-6990	24	Washer-Hardened
13	104-8301	24	Nut-HF, NI
14	87-2440	24	Bumper-Rubber
15	140-6194	24	Link ASM-Damper
15:1	251-311	2	Bearing-Ball

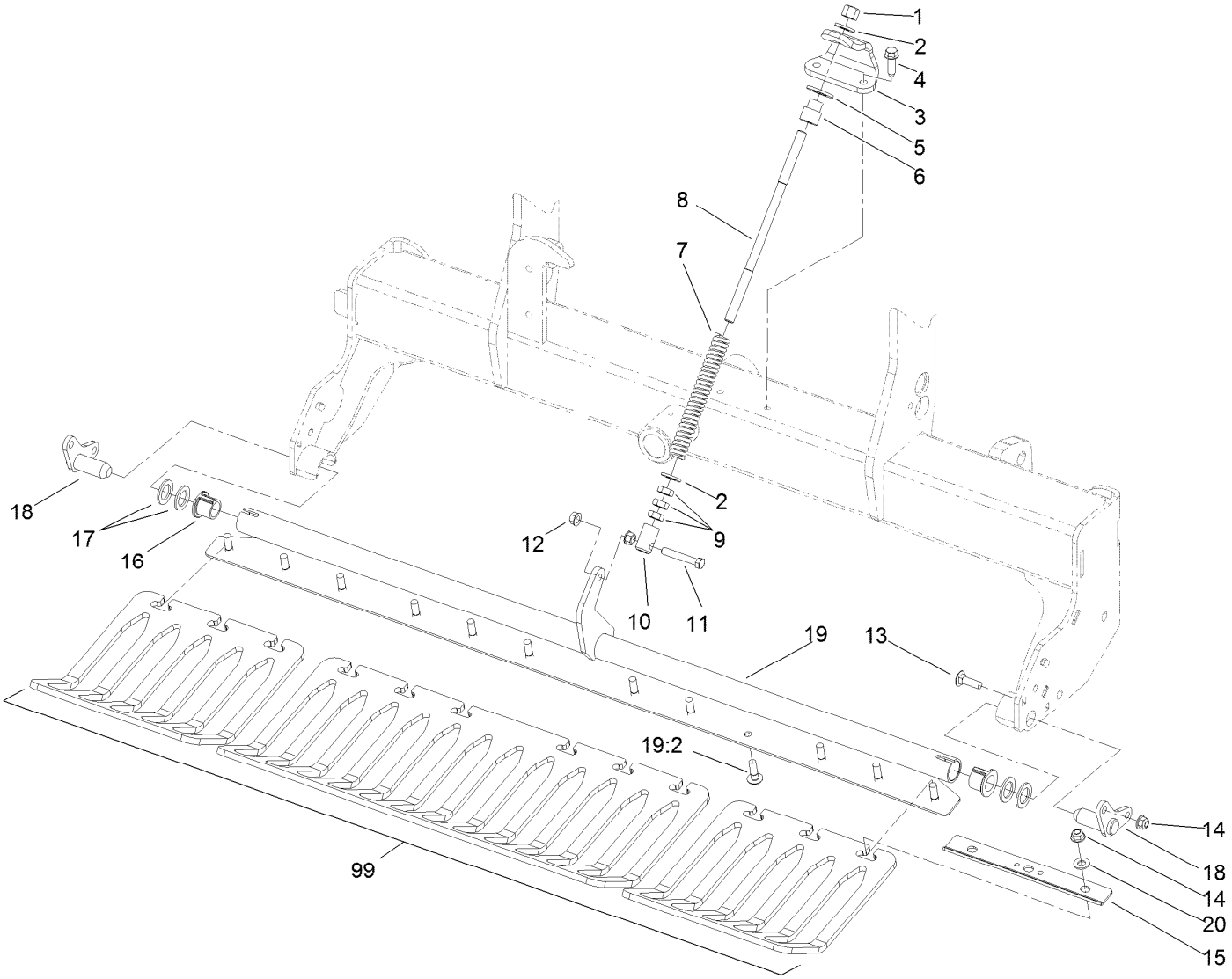

Right Hand Turf Guard Assembly

Ref.	Part Number	Qty.	Description
1	3296-23	1	Nut-Lock, NI
2	107-3395	2	Washer-Hardened
3	110-4267-03	1	Bracket-Spring
4	32144-109	2	Screw-Thd
5	3256-28	1	Washer-Flat
6	110-4416	1	Sleeve-Rod, Spring
7	110-4417	1	Spring-Compression
8	110-4421	1	Rod-Spring
9	3218-5	3	Nut-Jam
10	99-8662	1	Tube-Spring
11	323-45	1	Screw-HH
12	32128-40	2	Nut-Flange
13	3231-25	4	Bolt-CARR
14	104-8301	16	Nut-HF, NI

Ref.	Part Number	Qty.	Description
15	110-4274-03	4	Clamp-Guard, Turf
16	107-7581	2	Bushing-Flange, Keyed
17	3-7898	4	Washer-Thrust
18	110-4296	2	Shaft-Stub
19	110-4621	1	Turfguard ASM
19:2	125-3318	12	Screw-Neck, Rib
20	3256-24	12	Washer-Flat
99	120-1044	2	Guard-Turf, 3-Tine (Short) ■
99	120-1045	2	Guard-Turf, 4-Tine (Short) ● ■
99	120-1046	1	Guard-Turf, 4-Tine, Long ● ■
99	120-1047	2	Guard-Turf, 5 Tine, Short ● ■
99	120-1051	1	Guard-Turf, 3-Tine, Long ■
99	120-1052	1	Guard-Turf, 5 Tine, Long ● ■

● Not illustrated

■ Optional Equipment

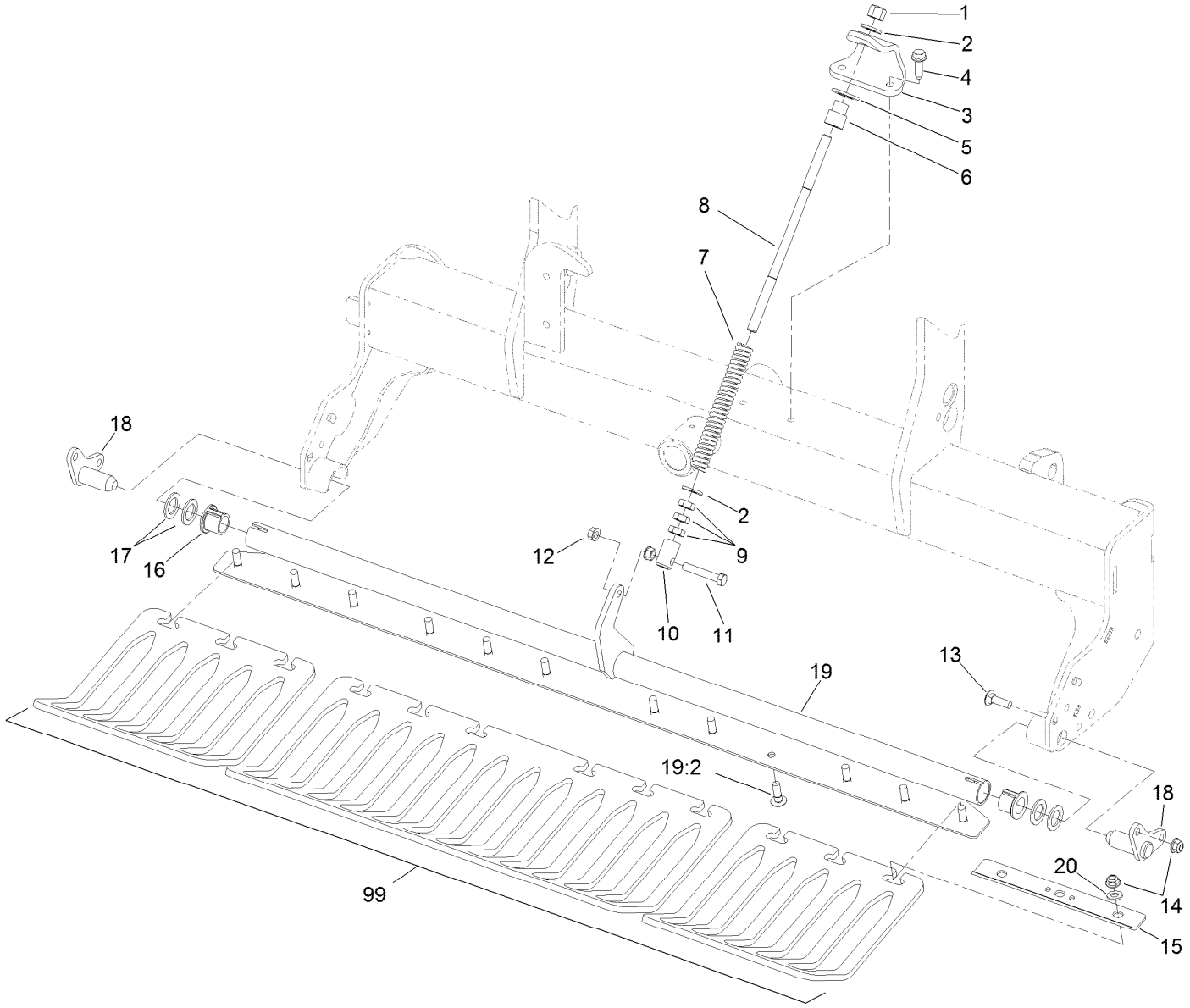

Left Hand Turf Guard Assembly

Ref.	Part Number	Qty.	Description
1	3296-23	1	Nut-Lock, NI
2	107-3395	2	Washer-Hardened
3	110-4267-03	1	Bracket-Spring
4	32144-109	2	Screw-Thd
5	3256-28	1	Washer-Flat
6	110-4416	1	Sleeve-Rod, Spring
7	110-4417	1	Spring-Compression
8	110-4421	1	Rod-Spring
9	3218-5	3	Nut-Jam
10	99-8662	1	Tube-Spring
11	323-45	1	Screw-HH
12	32128-40	2	Nut-Flange
13	3231-25	4	Bolt-CARR
14	104-8301	16	Nut-HF, NI

Ref.	Part Number	Qty.	Description
15	110-4274-03	4	Clamp-Guard, Turf
16	107-7581	2	Bushing-Flange, Keyed
17	3-7898	4	Washer-Thrust
18	110-4296	2	Shaft-Stub
19	110-4621	1	Turfguard ASM
19:2	125-3318	12	Screw-Neck, Rib
20	3256-24	12	Washer-Flat
99	120-1044	2	Guard-Turf, 3-Tine (Short) ■
99	120-1045	2	Guard-Turf, 4-Tine (Short) ● ■
99	120-1046	1	Guard-Turf, 4-Tine, Long ● ■
99	120-1047	2	Guard-Turf, 5 Tine, Short ● ■
99	120-1051	1	Guard-Turf, 3-Tine, Long ■
99	120-1052	1	Guard-Turf, 5 Tine, Long ● ■

● Not illustrated

■ Optional Equipment

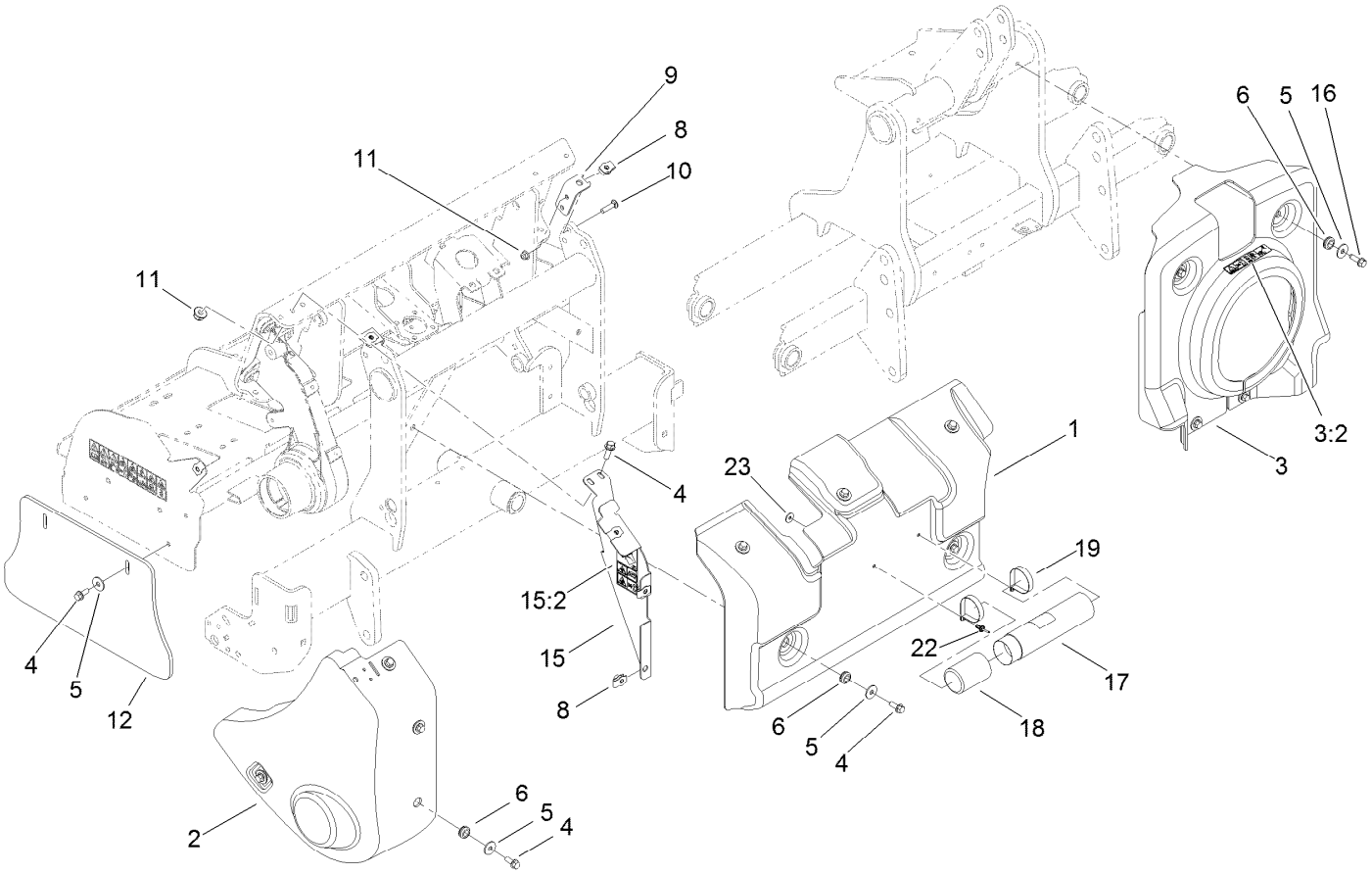

Right Hand Front Cover Assembly

Ref.	Part Number	Qty.	Description
1	110-4468	1	Cover-Front, RH
2	110-4466	1	Shield-Pulley, RH
3	110-4683	1	Yoke Cover ASM
3:2	110-4668	1	Decal-Warning, PTO
4	3234-24	15	Screw-HHF
5	93-8806	15	Washer-Hardened
6	110-4697	13	Mount-Isolated
8	105-4886	7	Nut-Tinnerman
9	110-4478	2	Support-Cover, Front
10	3231-25	4	Bolt-CARR

Ref.	Part Number	Qty.	Description
11	104-8301	8	Nut-HF, NI
12	105-1069	1	Shield-Side
15	110-4680	1	RH Shield Support ASM
15:2	110-4667	1	Decal-Warning, Spring
16	32144-109	4	Screw-Thd
17	104-7050	1	Tube-Manual
18	104-7048	1	Cap-Housing
19	2412-120	2	Clamp-R
22	114439	2	Rivet-Blind
23	3256-61	2	Washer-Flat

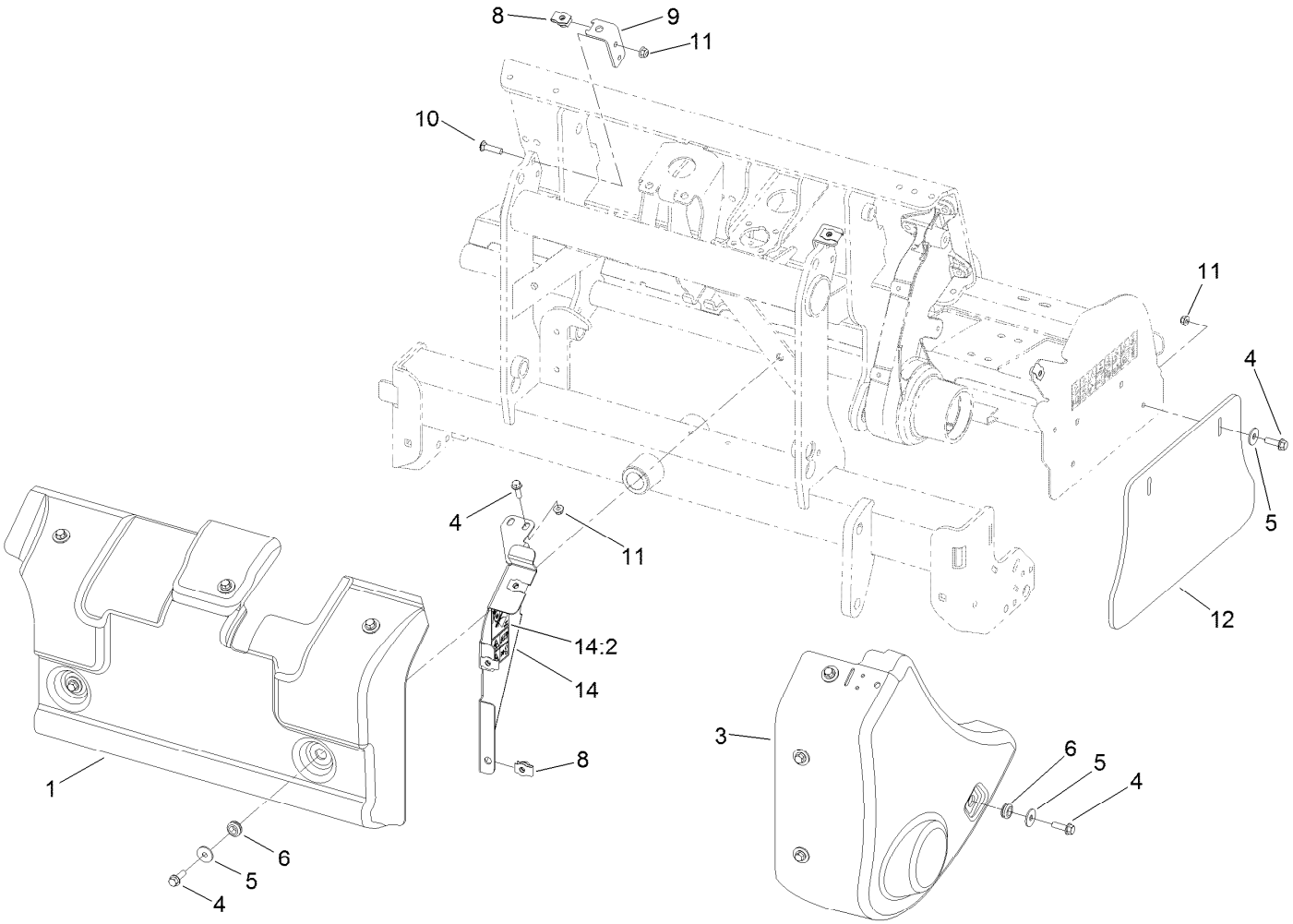

Left Hand Front Cover Assembly

Ref.	*Part Number*	*Qty.*	*Description*
1	110-4469	1	Cover-Front, LH
3	110-4467	1	Shield-Pulley, LH
4	3234-24	15	Screw-HHF
5	93-8806	11	Washer-Hardened
6	110-4697	9	Mount-Isolated
8	105-4886	7	Nut-Tinnerman
9	110-4478	2	Support-Cover, Front
10	3231-25	4	Bolt-CARR
11	104-8301	8	Nut-HF, NI
12	105-1069	1	Shield-Side
14	110-4681	1	LH Shield Support ASM
14:2	110-4667	1	Decal-Warning, Spring

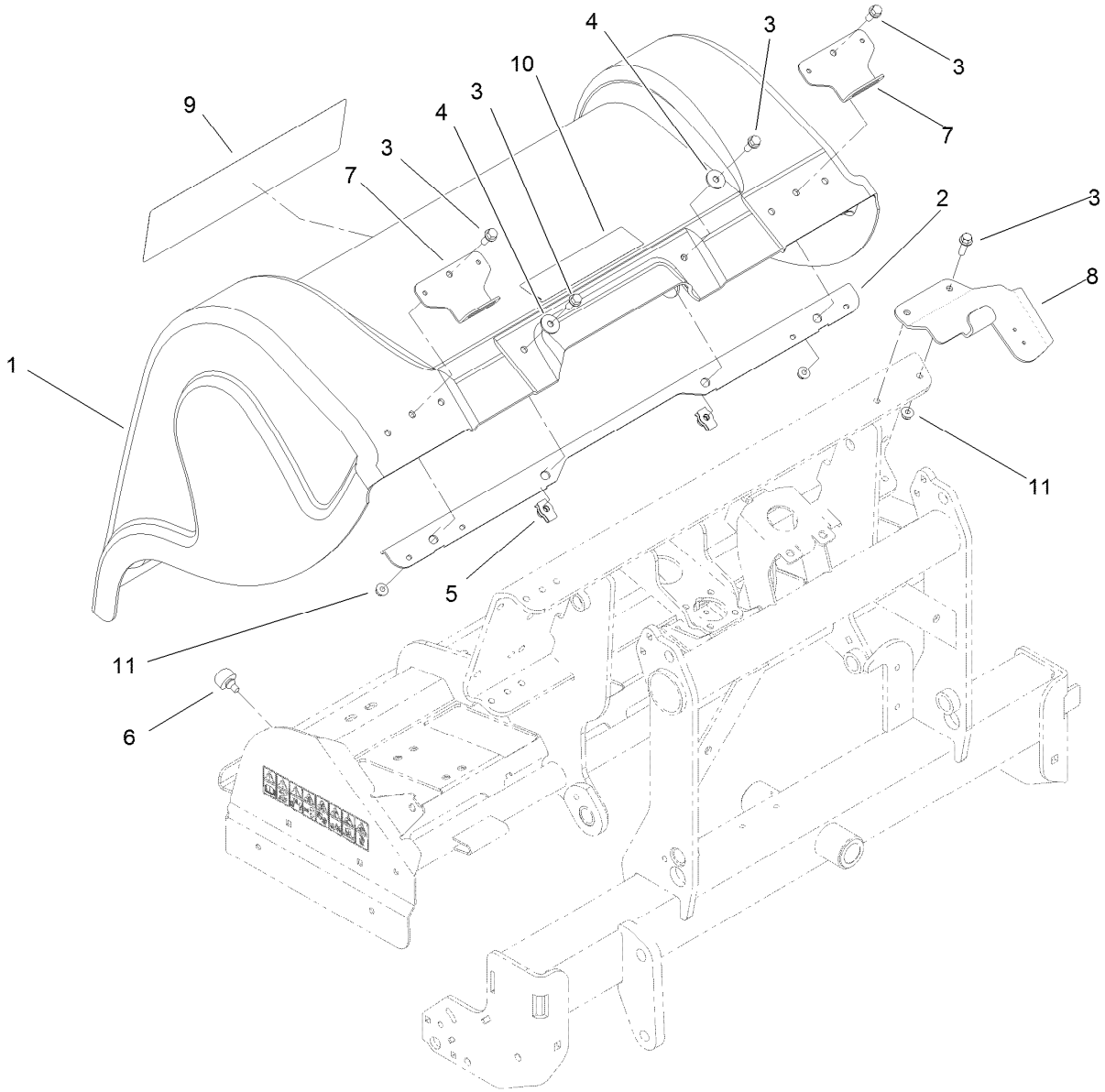

Right Hand Rear Cover Assembly

Ref.	*Part Number*	*Qty.*	*Description*
1	110-4464	1	Hood-Rear
2	110-4481-03	1	Stiffener-Hood
3	3234-24	6	Screw-HHF
4	93-8806	2	Washer-Hardened
5	105-4886	2	Nut-Tinnerman
6	87-2440	4	Bumper-Rubber
7	110-4552-03	2	Stirrup-Hood
8	110-4479-03	1	Mount-Latch, RH
9	110-4425	1	Decal-Procore
10	106-8856	1	Decal - Tine Depth, CE
11	104-8301	4	Nut-HF, NI

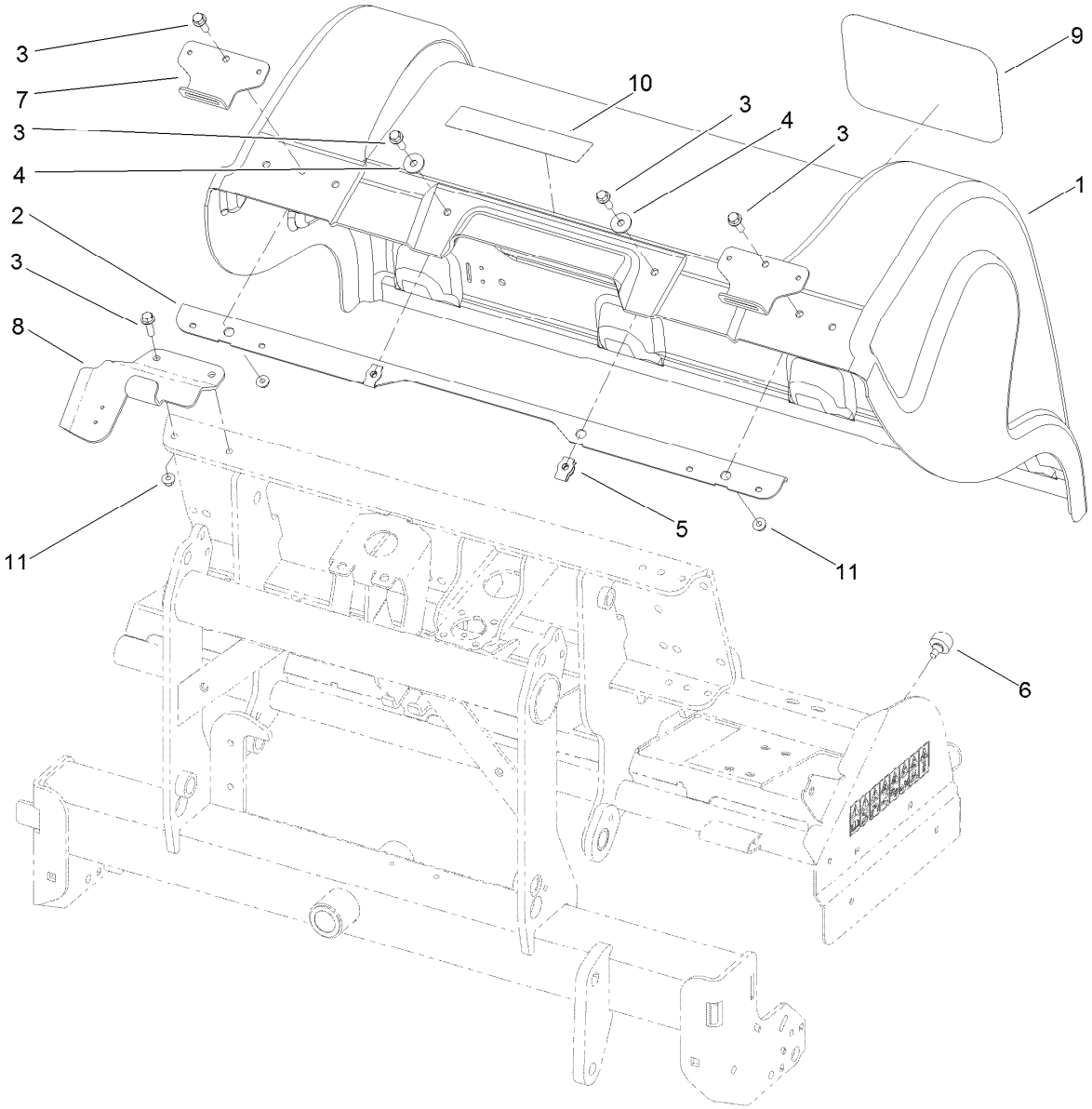

Left Hand Rear Cover Assembly

Ref.	*Part Number*	*Qty.*	*Description*
1	110-4464	1	Hood-Rear
2	110-4481-03	1	Stiffener-Hood
3	3234-24	6	Screw-HHF
4	93-8806	2	Washer-Hardened
5	105-4886	2	Nut-Tinnerman
6	87-2440	4	Bumper-Rubber
7	110-4552-03	2	Stirrup-Hood
8	110-4480-03	1	Mount-Latch, LH
9	67-7310	1	Decal
10	106-8856	1	Decal - Tine Depth, CE
11	104-8301	4	Nut-HF, NI

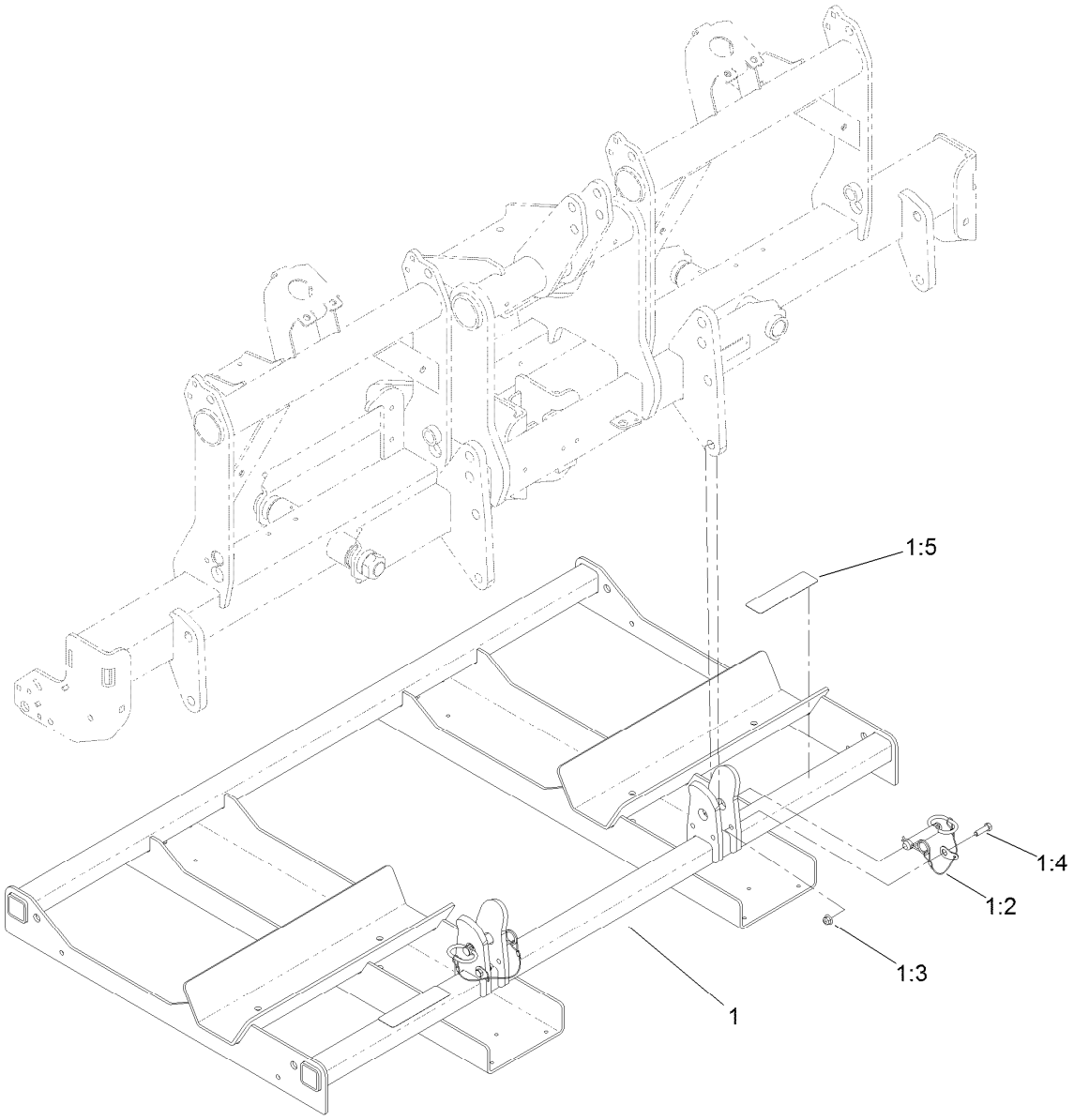

Storage Stand Assembly

Ref.	*Part Number*	*Qty.*	*Description*
1	140-8654	1	Procore 1298 Stand ASM
1:2	103-4553	2	Pin-Fold, ROPS
1:3	104-8301	2	Nut-HF, NI
1:4	323-7	2	Screw-HH
1:5	140-8750	2	Decal-Procore Stand

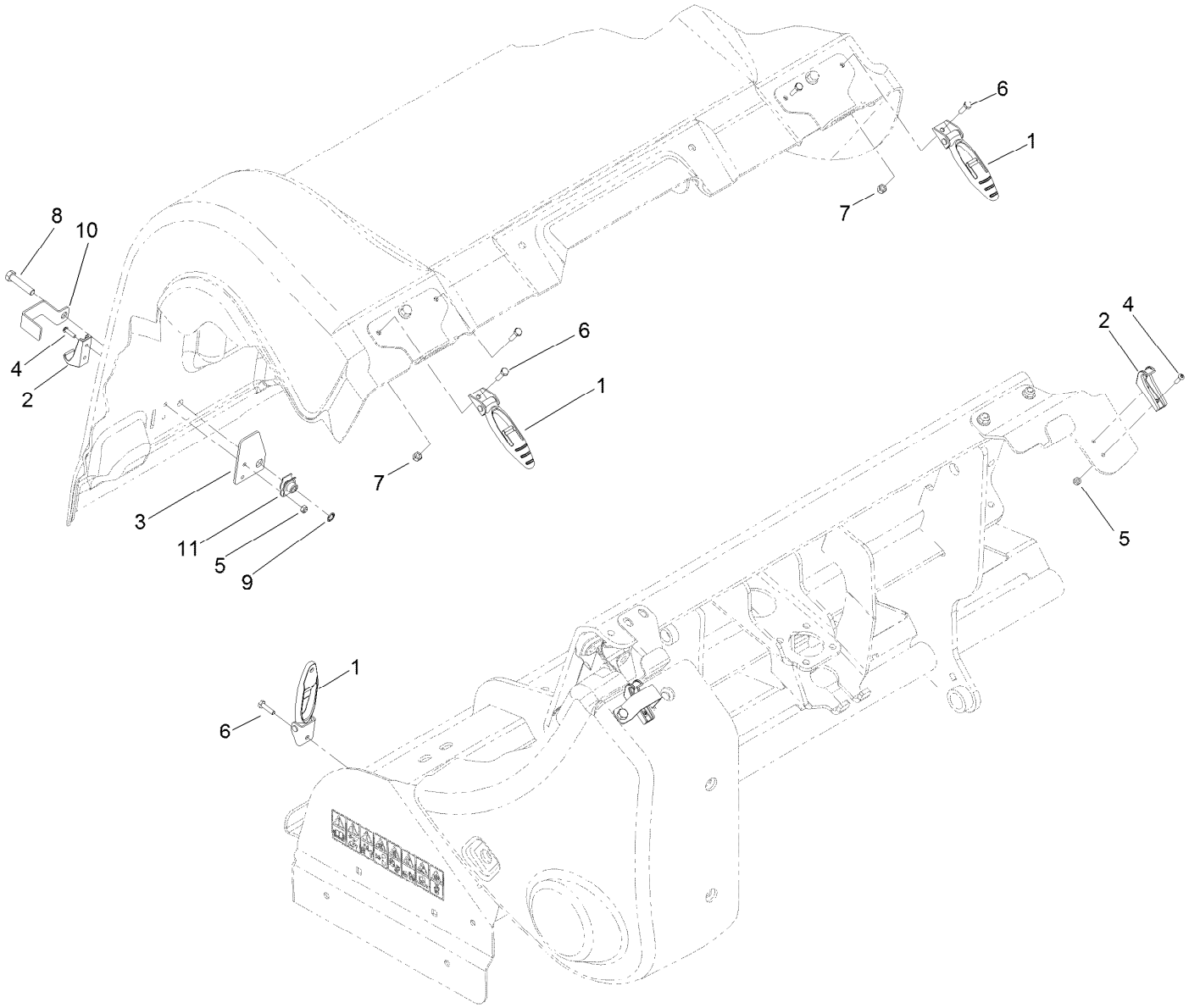

Cover Latch Assembly

Ref.	Part Number	Qty.	Description
1	103-2898	8	Latch-Rubber
2	103-2897	8	Latch-Catch
3	110-4672	6	Plate-Reinforcement
4	104-2408	16	Screw-HSBH
5	3296-2	16	Nut-Lock, NI
6	321-6	12	Screw-HH
7	3296-42	12	Nut-Lock, NI
8	323-53	6	Screw-HH
9	32151-72	6	Ring-Retaining
10	110-4673	6	Lock-Latch, CE
11	105-4886	6	Nut-Tinnerman

Attachments and Accessories

For 09716 ProCore 1298 Aerator

Product Name	Model/Part
Four-Tine Head Quick Lock	09719
2 x 5 Mini Tine Head	09736
1 x 6 Mini Tine Head	09737
Needle Tine Head	09739
3/4in Three-Tine Head	09794
3/4in Four-Tine Head	09796
7/8in Three-Tine Head	09797
Premium All Season Gear Lube (5 Gallon Pail)	108-1187
Premium All Purpose Grease (Tube)	108-1190
Premium All Season Gear Lube (Quart)	108-1590
Procore Ce Completion Kit	110-4693
Sleeve Tool ASM	114-0590-01
Guarded Driveshaft	115-2839
Turf Guard 3 Tine (Short)	120-1044
Turf Guard 4 Tine (Short)	120-1045
4-Tine Turf Guard (long)	120-1046
Turf Guard 5 Tine (Short)	120-1047
Turf Guard 6 Tine (Short)	120-1050
3-Tine Turf Guard (long)	120-1051
5-Tine Turf Guard (long)	120-1052
6-Tine Turf Guard (long)	120-1053

TORO®

Count on it.