Form No. 3439-804 Rev B

TORO®

Count on it.

Parts Catalog

# ProCore® 1298

## Aerator

**Model No. 09716—Serial No. 407138484 and Up**

Register at www.Toro.com.
Original Instructions (EN)

CE

*3439-804* B

# Ordering Replacement Parts

To order replacement parts, please supply the part number, the quantity, and the description of each part desired.

### Understanding Reference Numbers

Each identified part in an illustration has a reference number. The reference number for a part also appears in the parts list, along with other information about the part.

This catalog uses two special reference number formats, one to indicate parts in a service assembly and another to indicate the quantity of a given part in an illustration.

### Service Assembly Reference Numbers

Parts in service assemblies have reference numbers in the form a:b. The a represents the reference number of the entire service assembly and the b represents a sequential number unique to each part within the service assembly.

For example, a wheel assembly might be identified by reference number 6, the tire by 6:1, the valve by 6:2, and the wheel by 6:3. When you order the assembly identified by reference number 6, you receive all parts identified by reference numbers 6:1,6:2, and 6:3. However, you may also order any part individually. Reference numbers of this type appear in illustration and in parts lists.

### Reference Numbers Indicating Quantity

In an illustration, if a reference number indicates more than one part, the reference number has the form nX y. The n represents the quantity of the part, the X is the multiplication symbol, and the y represents the reference number.

For example, in an illustration, the reference number 2X 37 means that two of the parts identified by reference number 37 are indicated.

# Contents

Frame Assembly . . . . . 4
Gearbox and Driveline Assembly . . . . . 5
Shielded Drive Shaft Assembly No. 110-4283 . . . . . 6
Gearbox Assembly No. 110-4565 . . . . . 7
Drive Shaft Assembly No. 110-4586 . . . . . 8
Right Hand Roller and Scraper Assembly . . . . . 9
Left Hand Roller and Scraper Assembly . . . . . 10
Right Hand Belt Drive Assembly . . . . . 11
Left Hand Belt Drive Assembly . . . . . 12
Left Hand H-Frame Assembly . . . . . 13
Depth Control Assembly No. 115-2844 . . . . . 14
Left Hand H-Frame Assembly . . . . . 15
Right Hand No. 1 and No. 2 Crankarm Assembly . . . . . 16
Right Hand No. 3 and No. 4 Crankarm Assembly . . . . . 17
Right Hand No. 5 and No. 6 Crankarm Assembly . . . . . 18
Left Hand No. 1 and No. 2 Crankarm Assembly . . . . . 19
Left Hand No. 3 and No. 4 Crankarm Assembly . . . . . 20
Left Hand No. 5 and No. 6 Crankarm Assembly . . . . . 21
Roto-Link Damper Assembly . . . . . 22
Right Hand Turf Guard Assembly . . . . . 23
Left Hand Turf Guard Assembly . . . . . 24
Right Hand Front Cover Assembly . . . . . 25
Left Hand Front Cover Assembly . . . . . 26
Right Hand Rear Cover Assembly . . . . . 27
Left Hand Rear Cover Assembly . . . . . 28
Storage Stand Assembly . . . . . 29
Cover Latch Assembly . . . . . 30
Attachments and Accessories . . . . . 31

**© 2023—The Toro® Company**
**8111 Lyndale Avenue South**
**Bloomington, MN 55420**



**Contact us at www.Toro.com.**
**Printed in the USA.**
**All Rights Reserved**

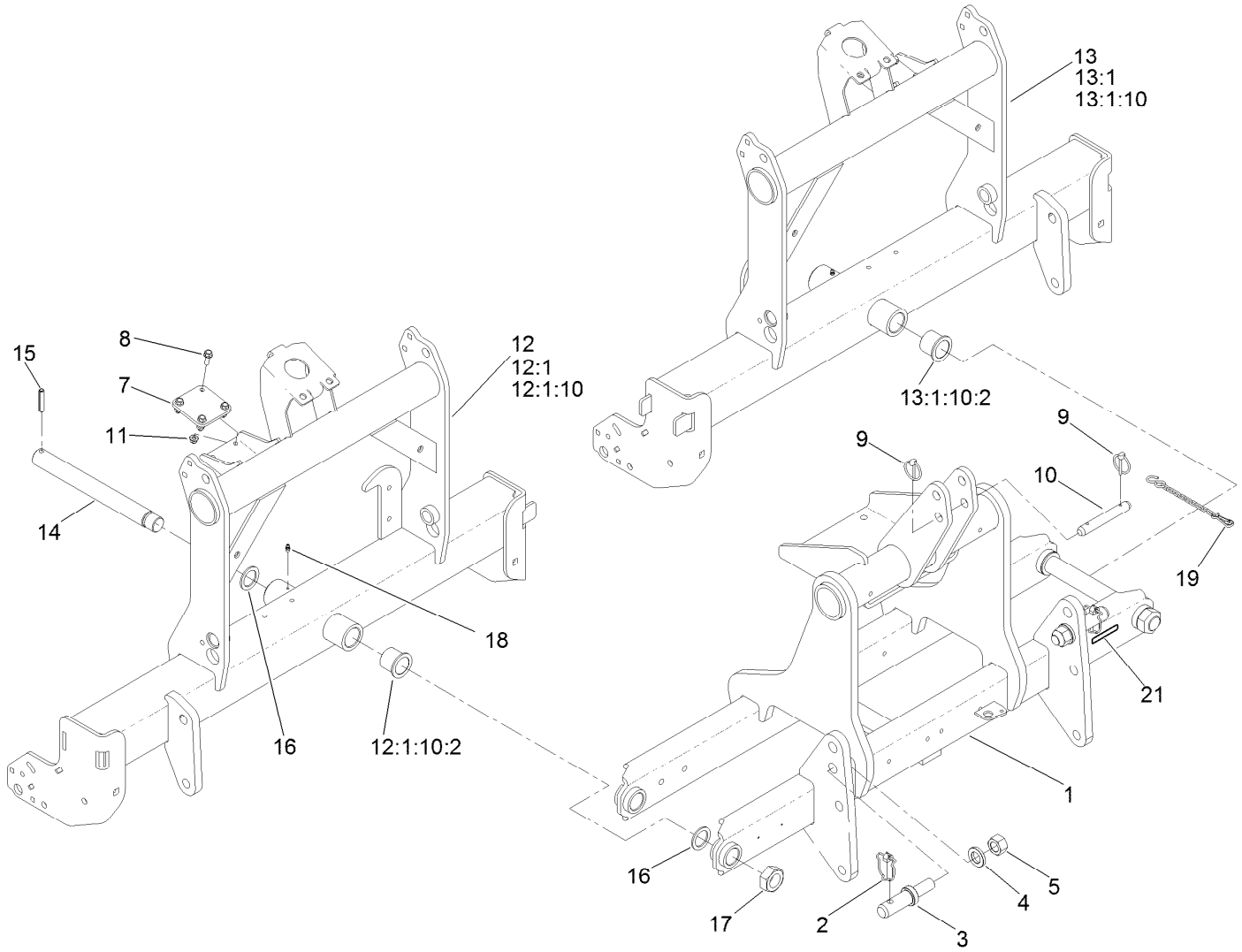


# Frame Assembly

| Ref. | Part Number | Qty. | Description |
|---|---|---|---|
| 1 | 110-4202-03 | 1 | Mast-Hitch, 3-Point |
| 2 | 3290-384 | 2 | Pin-Lynch |
| 3 | 110-4314 | 2 | Pin-Link, Cat 2 |
| 4 | 120-5576 | 2 | Washer-Hardened |
| 5 | 3219-18 | 2 | Nut-Hex |
| 7 | 110-4440 | 2 | Pad |
| 8 | 3234-17 | 8 | Screw-HHF |
| 9 | 92-1298 | 2 | Pin-Lynch |
| 10 | 92-1233 | 1 | Pin-Clevis |
| 11 | 104-8300 | 8 | Nut-HF, NI |
| 12 | 110-4209-01 | 1 | RH Subframe ASM |
| 12:1 | | 1 | Subframe-RH ● |
| 12:1:10 | | 1 | Hub ASM ● |
| 12:1:10:2 | 69-6470 | 2 | Bushing-Caster |
| 13 | 110-4210-01 | 1 | LH Subframe ASM |
| 13:1 | | 1 | Subframe-LH ● |
| 13:1:10 | | 1 | Hub ASM ● |
| 13:1:10:2 | 69-6470 | 2 | Bushing-Caster |
| 14 | 71-2590 | 2 | Shaft-Pivot |
| 15 | 32121-110 | 2 | Pin-Roll, Slotted |
| 16 | 256-304 | 4 | Washer-Thrust |
| 17 | 3296-68 | 2 | Nut-Lock, NI |
| 18 | 302-5 | 2 | Fitting-Grease |
| 19 | 110-4679 | 1 | Chain-Storage, Driveline |
| 21 | 133-8061 | 1 | Decal-Warning |

● Not serviced separately

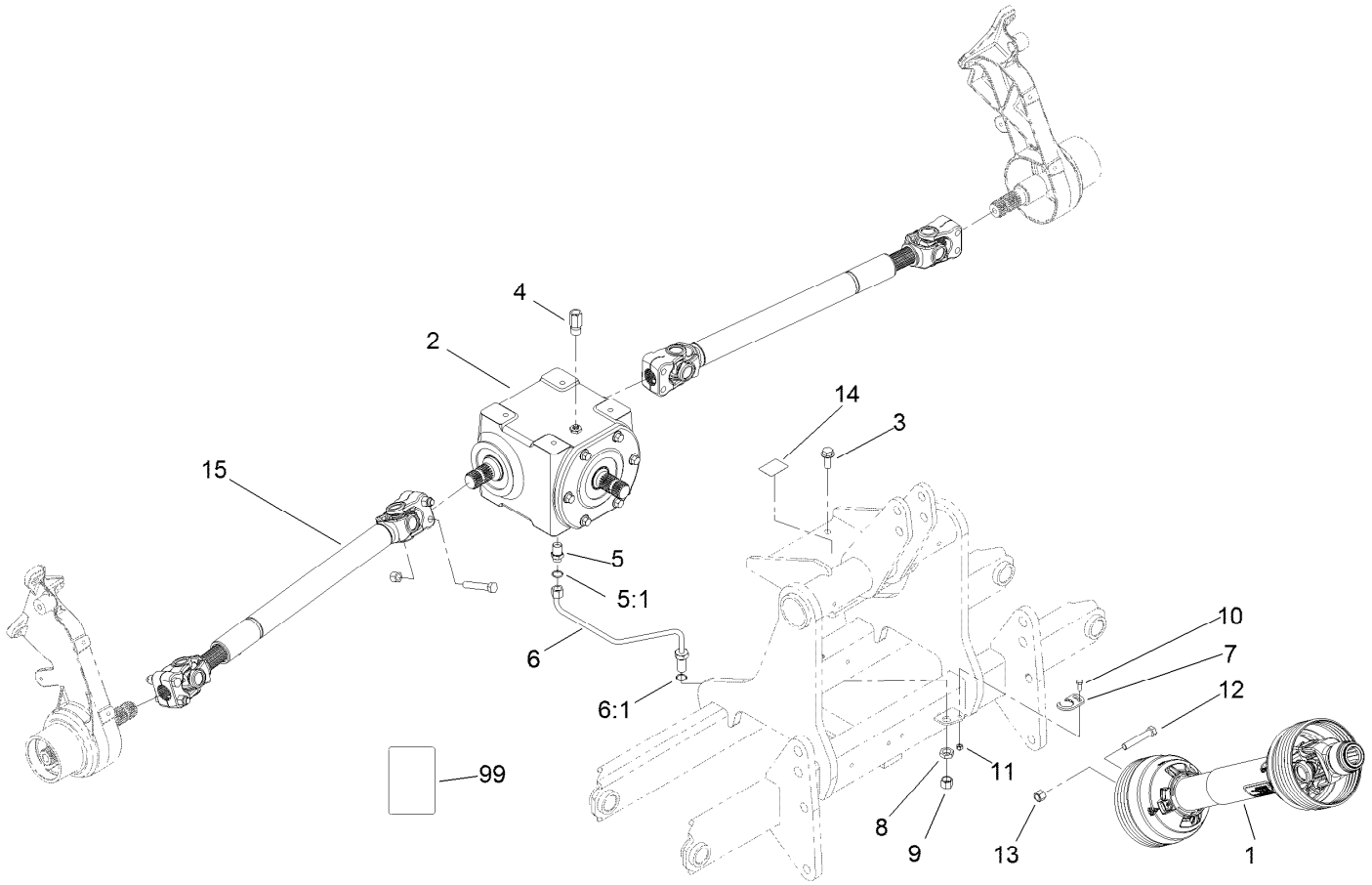


# Gearbox and Driveline Assembly

| Ref. | Part Number | Qty. | Description |
|---|---|---|---|
| 1 | 110-4283 | 1 | Shielded Driveshaft ASM |
| 2 | 110-4565 | 1 | Gearbox-T |
| 3 | 3234-38 | 4 | Screw-HHF |
| 4 | 110-4590 | 1 | Fitting-Reducer |
| 5 | 340-124 | 1 | Adapter |
| 5:1 | 237-22 | 1 | O-Ring |
| 6 | 110-4336 | 1 | Tube ASM |
| 6:1 | 237-22 | 1 | O-Ring |
| 7 | 110-4553 | 1 | Keeper-Hardline |
| 8 | 340-70 | 1 | Nut-Lock |

| Ref. | Part Number | Qty. | Description |
|---|---|---|---|
| 9 | 340-117 | 1 | Cap |
| 10 | 3229-1 | 1 | Screw-CARR |
| 11 | 3296-42 | 1 | Nut-Lock, NI |
| 12 | 325-12 | 9 | Screw-HH |
| 13 | 3296-23 | 9 | Nut-Lock, NI |
| 14 | 110-4665 | 1 | Decal-Service, Oil |
| 15 | 110-4586 | 2 | Drive Shaft ASM |
| 99 | 138-9038 | 1 | Decal-Danger, Entanglement |

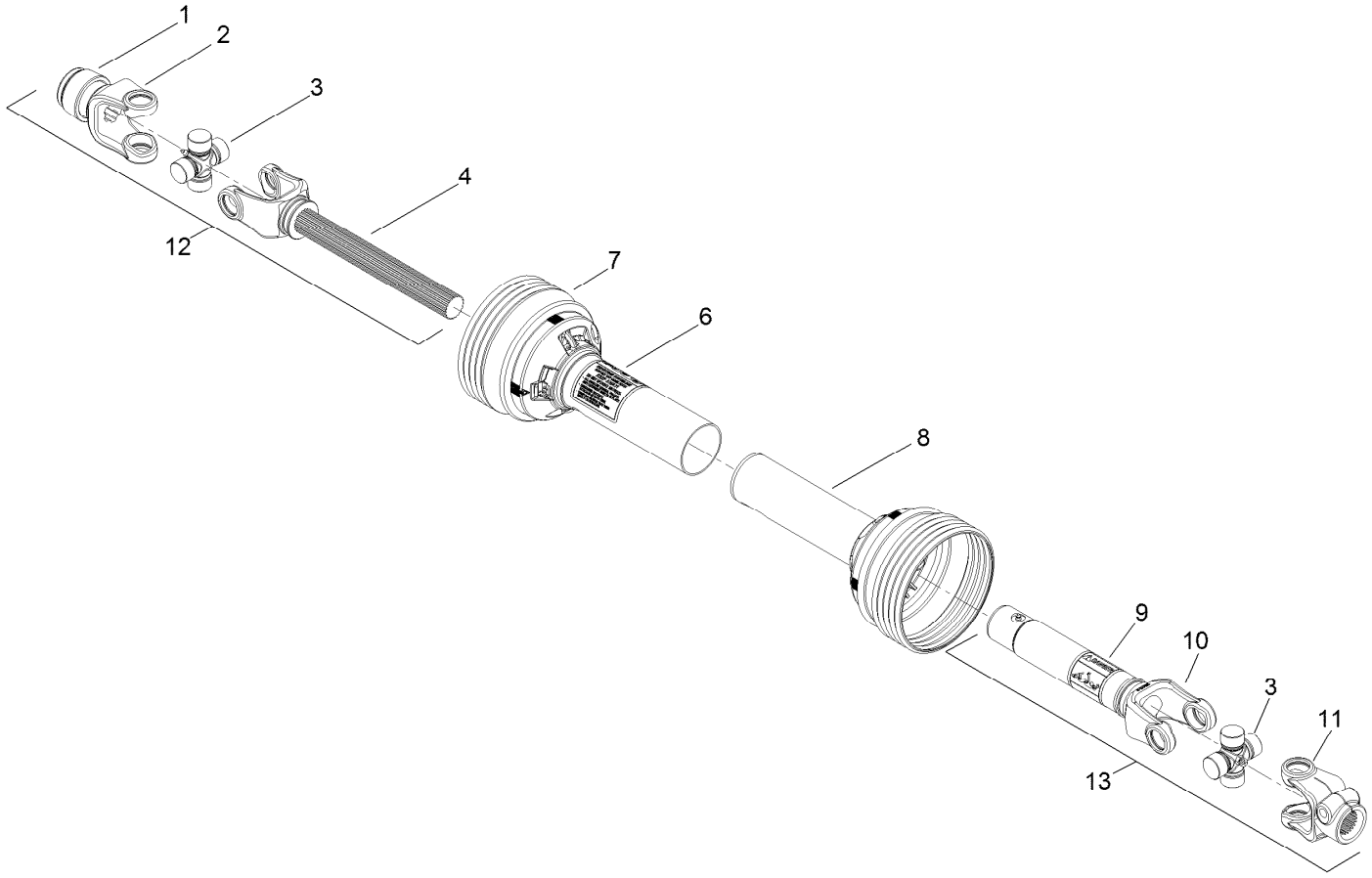


# Shielded Drive Shaft Assembly No. 110-4283

| *Ref.* | *Part Number* | *Qty.* | *Description* |
|---|---|---|---|
| 1 | 93-4636 | 1 | Auto-Lok Repair Kit |
| 2 | | 1 | Safety Slide Lock Yoke ASM ■ |
| 3 | 110-4635 | 2 | Cross And Bearing Kit |
| 4 | | 1 | Yoke And Shaft ASM ■ |
| 5 | 110-4636 | 2 | Guard Repair Kit ● |
| 6 | 92-1581 | 1 | Decal-Safety |
| 7 | 110-4637 | 1 | Guard-Outer |
| 8 | 110-4638 | 1 | Guard-Inner |
| 9 | 92-1582 | 1 | Decal-Safety |
| 10 | | 1 | Yoke And Tube ASM ■ |
| 11 | | 1 | Yoke ■ |
| 12 | 110-4633 | 1 | Joint And Shaft Half ASM |
| 13 | 110-4634 | 1 | Joint And Tube Half ASM |

● Not illustrated

■ Not serviced separately

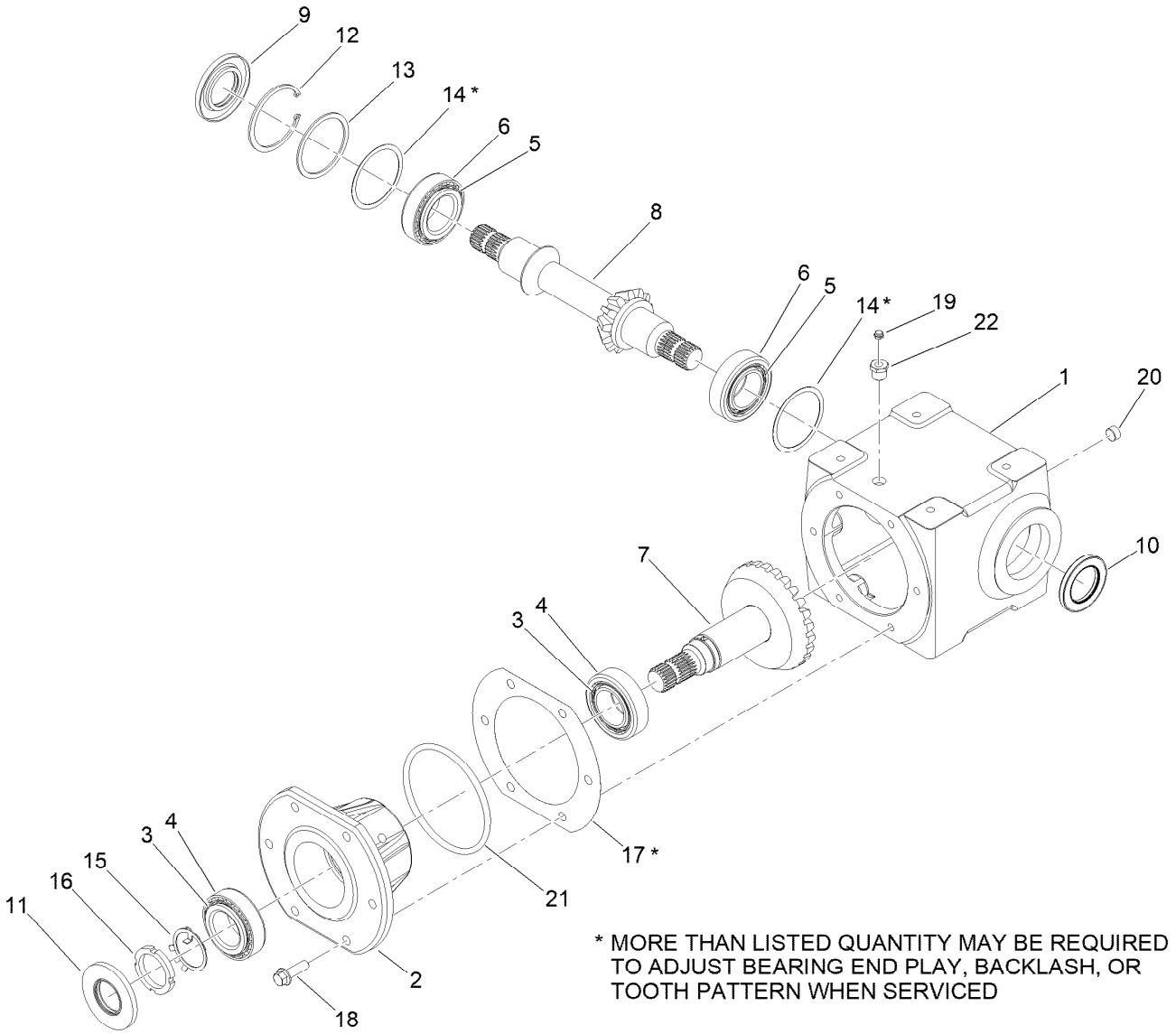


# Gearbox Assembly No. 110-4565

| Ref. | Part Number | Qty. | Description |
|---|---|---|---|
| 1 | 110-4644 | 1 | Housing |
| 2 | 110-4645 | 1 | Quill |
| 3 | 110-4646 | 2 | Cone-Bearing |
| 4 | 110-4647 | 2 | Cup-Bearing |
| 5 | 110-4648 | 2 | Cone-Bearing |
| 6 | 110-4649 | 2 | Cup-Bearing |
| 7 | 110-4650 | 1 | Gear And Shaft ASM |
| 8 | 110-4651 | 1 | Shaft-Cross |
| 9 | 110-4652 | 1 | Seal-Viton |
| 10 | 110-4653 | 1 | Seal-Viton |
| 11 | 110-4654 | 1 | Seal-Viton |

| Ref. | Part Number | Qty. | Description |
|---|---|---|---|
| 12 | 110-4655 | 1 | Ring-Retaining |
| 13 | 110-4656 | 1 | Shim-Hard |
| 14 | 110-4657 | 2 | Shim-Soft |
| 15 | 110-4658 | 1 | Shim-Retaining |
| 16 | 110-4659 | 1 | Nut-Lock |
| 17 | 110-4660 | 1 | Gasket |
| 18 | 33106-045 | 6 | Screw-HHF |
| 19 | 110-4661 | 1 | Vent-Relief |
| 20 | 281-3 | 1 | Plug-Pipe, SQH |
| 21 | 110-4662 | 1 | O-Ring |
| 22 | 140-2251 | 1 | Adapter |

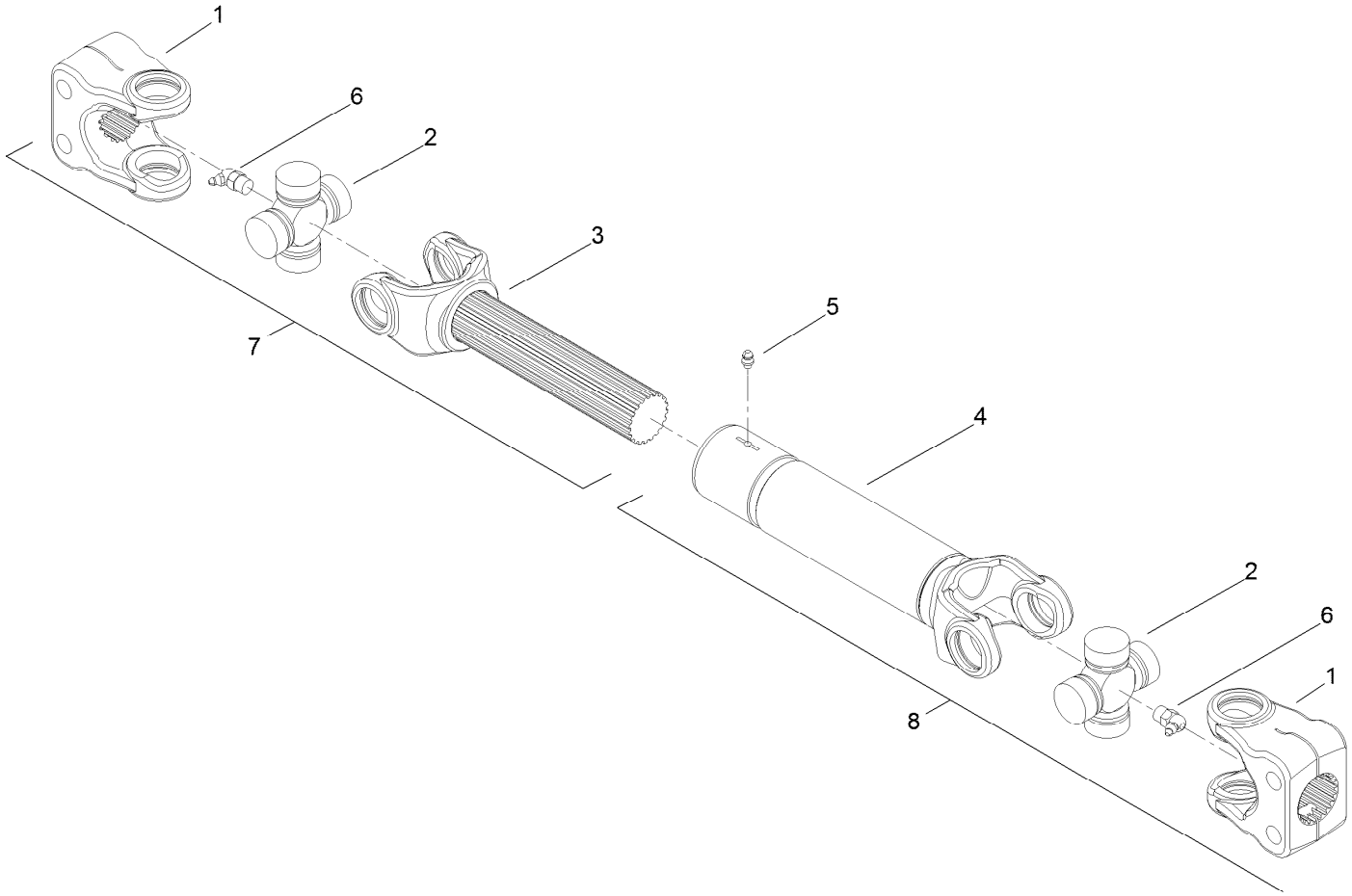


# Drive Shaft Assembly No. 110-4586

| *Ref.* | *Part Number* | *Qty.* | *Description* |
|---|---|---|---|
| 1 | | 1 | Yoke ● |
| 2 | 110-4641 | 2 | Cross And Bearing Kit |
| 3 | | 1 | Yoke And Shaft ASM ● |
| 4 | | 1 | Yoke And Tube ASM ● |
| 5 | | 1 | Zerk-Grease ● |
| 6 | | 2 | Zerk-Grease ● |
| 7 | 110-4642 | 1 | Joint And Shaft Half ASM |
| 8 | 110-4643 | 1 | Joint And Tube Half ASM |

● Not serviced separately

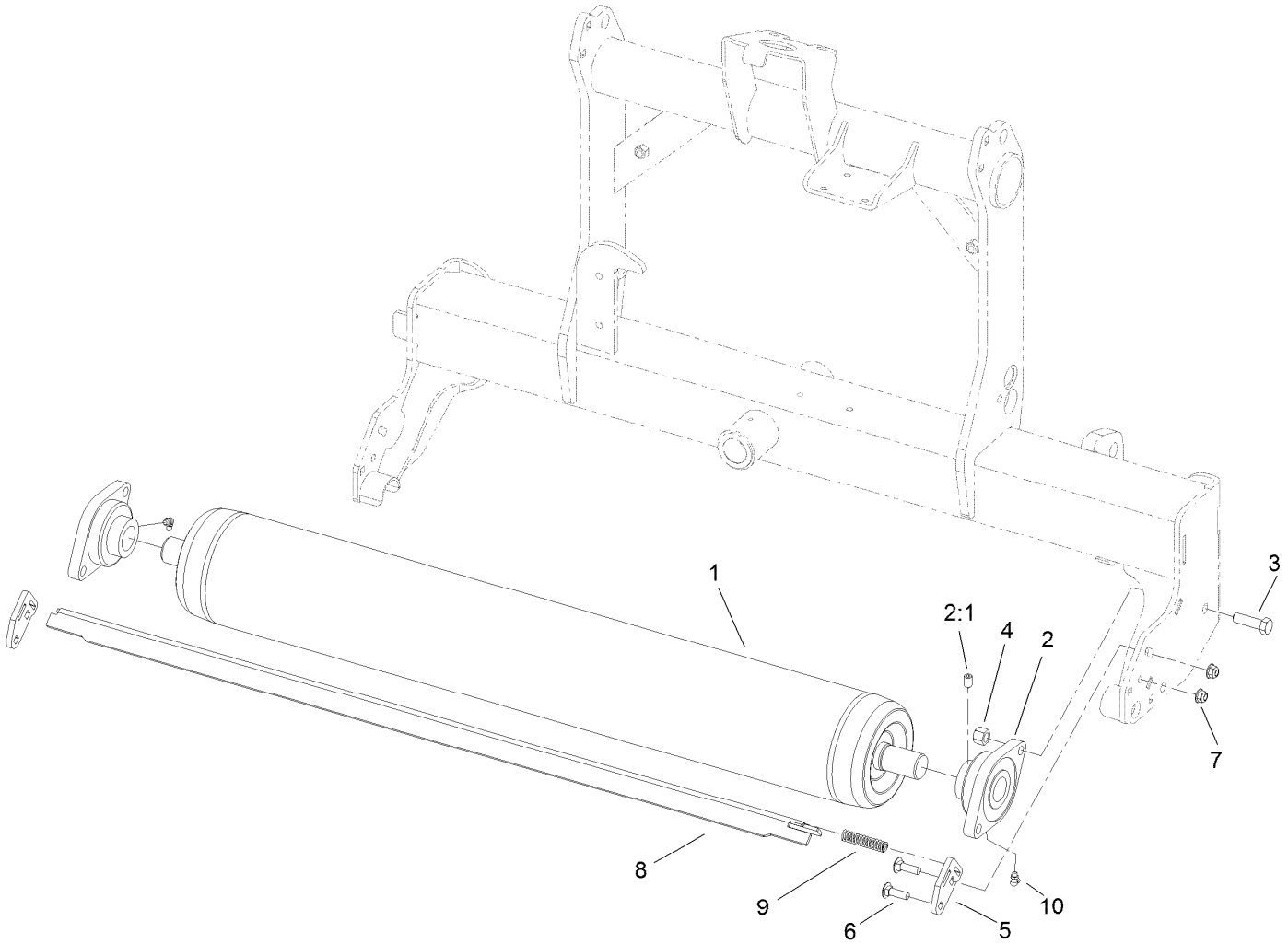


# Right Hand Roller and Scraper Assembly

| *Ref.* | *Part Number* | *Qty.* | *Description* |
|---|---|---|---|
| 1 | 110-4253-03 | 1 | Roller |
| 2 | 105-0962 | 2 | Bearing-Mount, Flange |
| 2:1 | 3246-17 | 1 | Setscrew-HSH |
| 3 | 325-7 | 4 | Screw-HH |
| 4 | 3296-23 | 4 | Nut-Lock, NI |
| 5 | 110-4290 | 2 | Arm-Scraper |
| 6 | 3231-25 | 4 | Bolt-CARR |
| 7 | 104-8301 | 4 | Nut-HF, NI |
| 8 | 110-4289-03 | 1 | Scraper-Roller |
| 9 | 108-4469 | 1 | Spring-Compression |
| 10 | 302-40 | 2 | Fitting-Grease, 90 DEG |

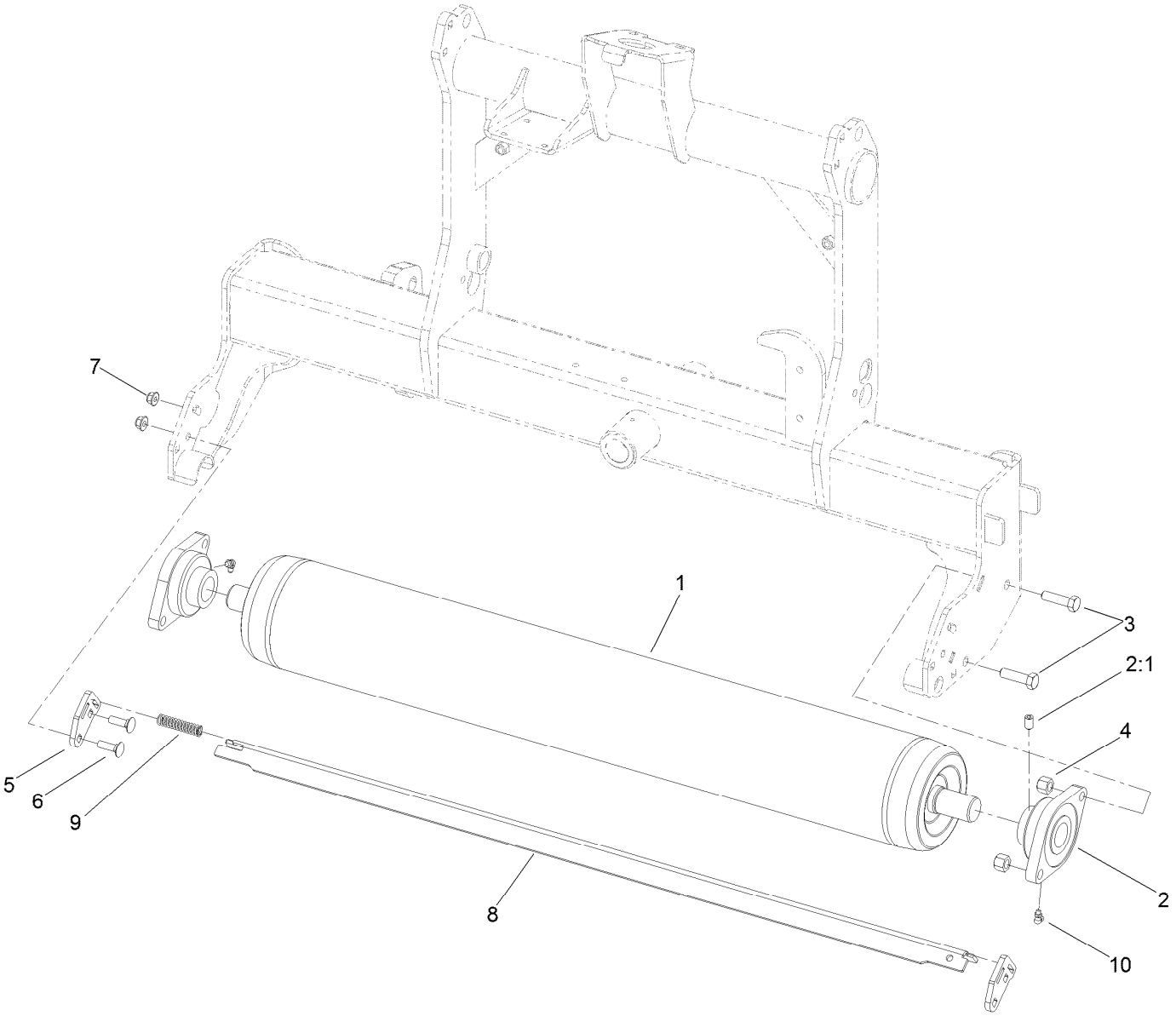


# Left Hand Roller and Scraper Assembly

| *Ref.* | *Part Number* | *Qty.* | *Description* |
|---|---|---|---|
| 1 | 110-4253-03 | 1 | Roller |
| 2 | 105-0962 | 2 | Bearing-Mount, Flange |
| 2:1 | 3246-17 | 1 | Setscrew-HSH |
| 3 | 325-7 | 4 | Screw-HH |
| 4 | 3296-23 | 4 | Nut-Lock, NI |
| 5 | 110-4290 | 2 | Arm-Scraper |
| 6 | 3231-25 | 4 | Bolt-CARR |
| 7 | 104-8301 | 4 | Nut-HF, NI |
| 8 | 110-4289-03 | 1 | Scraper-Roller |
| 9 | 108-4469 | 1 | Spring-Compression |
| 10 | 302-40 | 2 | Fitting-Grease, 90 DEG |

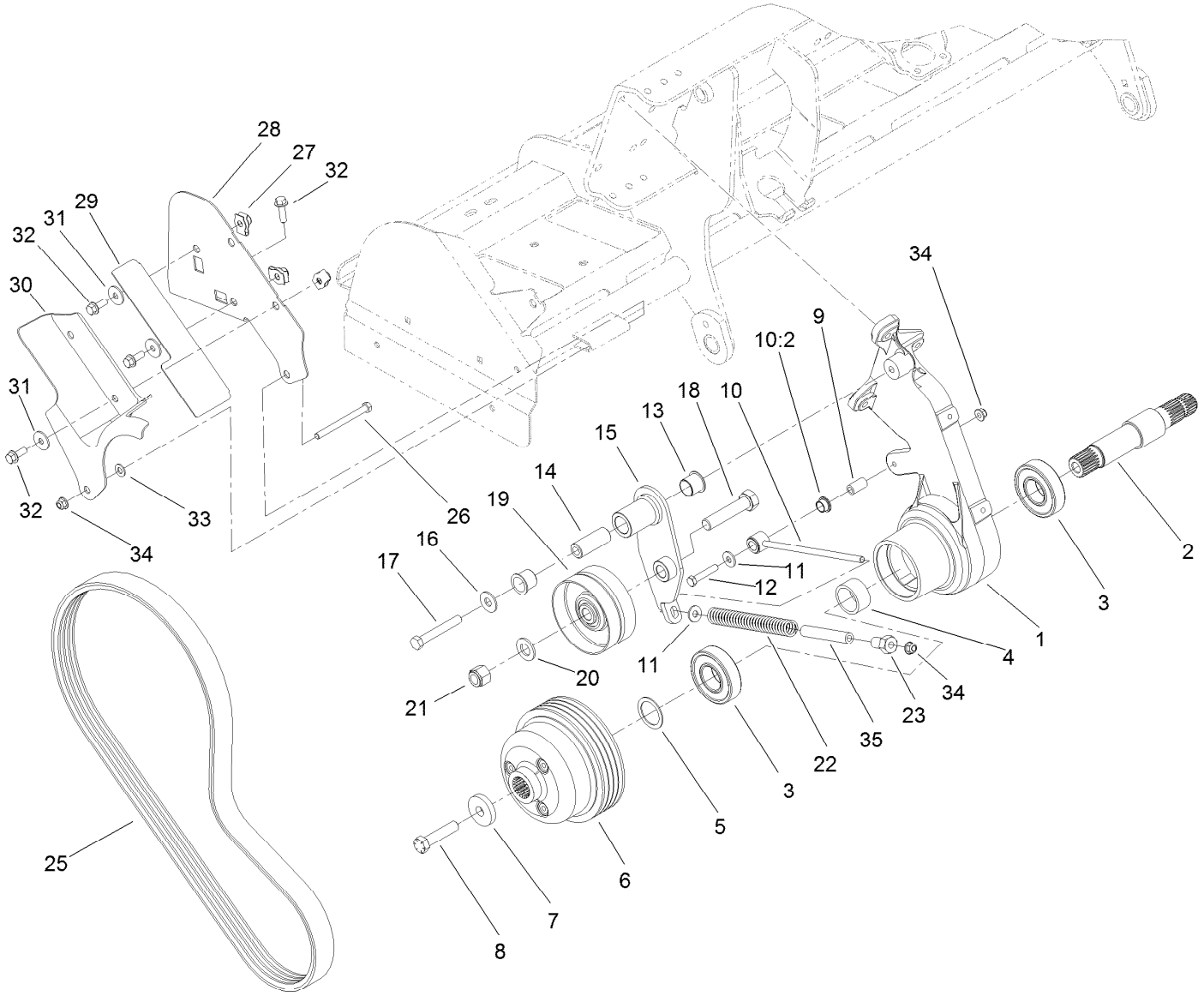


# Right Hand Belt Drive Assembly

| Ref. | Part Number | Qty. | Description |
|---|---|---|---|
| 1 | 110-4445 | 1 | Support-Pulley, RH |
| 2 | 110-4527 | 1 | Shaft-Pulley, Splined |
| 3 | 106-8871 | 2 | Bearing-Ball |
| 4 | 110-4460 | 1 | Spacer-Bearing |
| 5 | 110-4498 | 1 | Washer-Shim |
| 6 | 110-4419 | 1 | Pulley |
| 7 | 105-1016 | 1 | Washer-Hardened |
| 8 | 110-4614 | 1 | Screw-HH |
| 9 | 110-4631 | 1 | Tube-Spacer |
| 10 | 115-2815 | 1 | Idler Arm ASM |
| 10:2 | 80-1290 | 2 | Bushing |
| 11 | 80-6990 | 2 | Washer-Hardened |
| 12 | 323-11 | 1 | Screw-HH |
| 13 | 126-1963 | 2 | Bushing-Pivot |
| 14 | 105-0945 | 1 | Sleeve-Pivot |
| 15 | 110-4624-03 | 1 | Arm-Idler, RH |
| 16 | 3256-6 | 1 | Washer-Flat |
| 17 | 325-14 | 1 | Screw-HH |

| Ref. | Part Number | Qty. | Description |
|---|---|---|---|
| 18 | 328-5 | 1 | Screw-HH |
| 19 | 100-7631 | 1 | Pulley-Idler |
| 20 | 3256-28 | 1 | Washer-Flat |
| 21 | 3296-51 | 1 | Nut-Lock, NI |
| 22 | 110-4632 | 1 | Spring-Compression |
| 23 | 110-4676 | 1 | Nut-Idler |
| 25 | 110-4327 | 1 | Belt-Banded, 4 Groove |
| 26 | 323-17 | 1 | Screw-HH |
| 27 | 105-4886 | 4 | Nut-Tinnerman |
| 28 | 110-4476-03 | 1 | Support-Guard, Belt |
| 29 | 114-1463-03 | 1 | Shield-Dirt, RH |
| 30 | 110-4474 | 1 | Guard-Belt, RH |
| 31 | 93-8806 | 4 | Washer-Hardened |
| 32 | 3234-24 | 6 | Screw-HHF |
| 33 | 3256-24 | 1 | Washer-Flat |
| 34 | 104-8301 | 3 | Nut-HF, NI |
| 35 | 115-2800 | 1 | Hose |

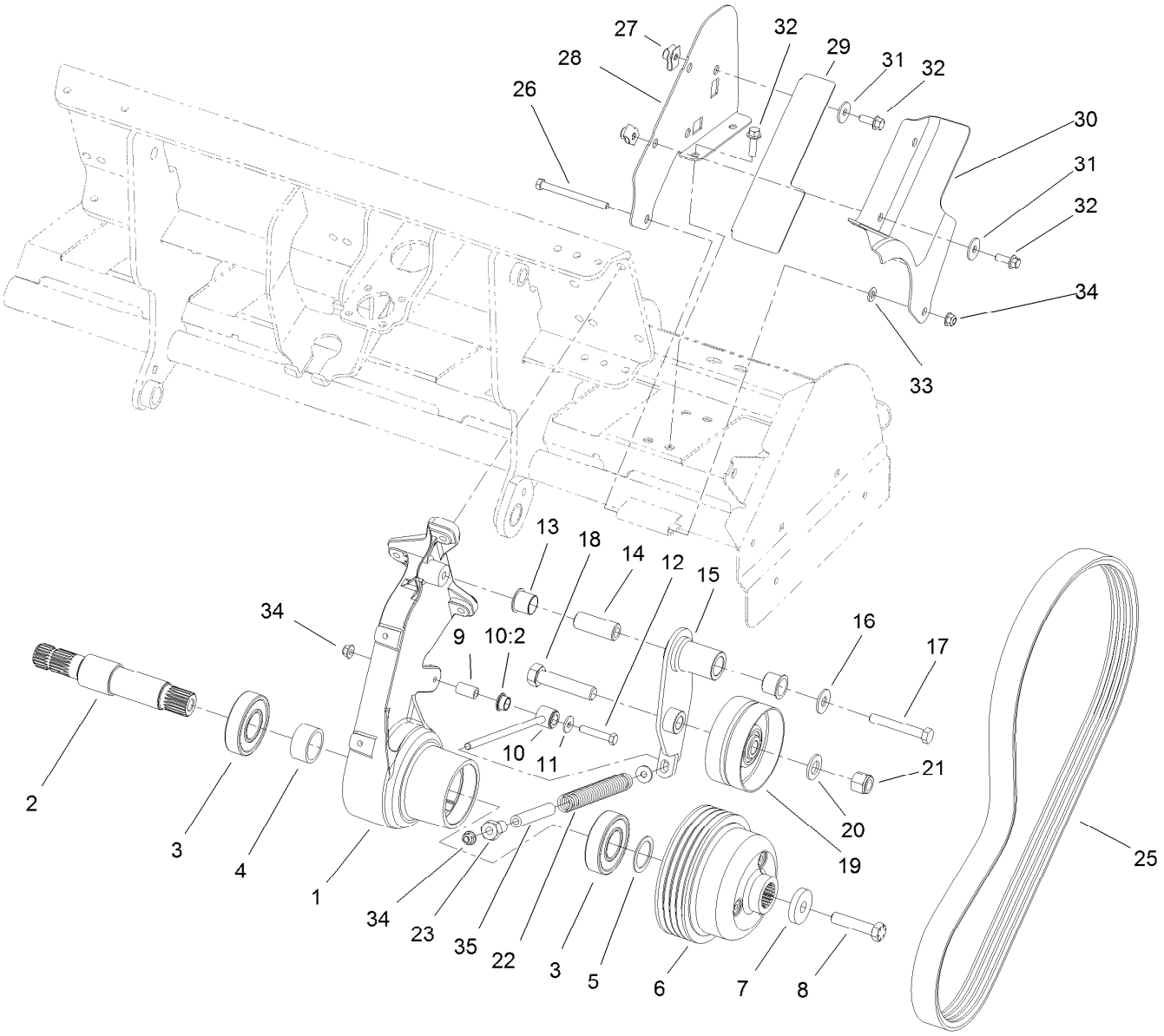


# Left Hand Belt Drive Assembly

| Ref. | Part Number | Qty. | Description |
|---|---|---|---|
| 1 | 110-4447 | 1 | Support-Pulley, LH |
| 2 | 110-4527 | 1 | Shaft-Pulley, Splined |
| 3 | 106-8871 | 2 | Bearing-Ball |
| 4 | 110-4460 | 1 | Spacer-Bearing |
| 5 | 110-4498 | 1 | Washer-Shim |
| 6 | 110-4419 | 1 | Pulley |
| 7 | 105-1016 | 1 | Washer-Hardened |
| 8 | 110-4614 | 1 | Screw-HH |
| 9 | 110-4631 | 1 | Tube-Spacer |
| 10 | 115-2815 | 1 | Idler Arm ASM |
| 10:2 | 80-1290 | 2 | Bushing |
| 11 | 80-6990 | 2 | Washer-Hardened |
| 12 | 323-11 | 1 | Screw-HH |
| 13 | 126-1963 | 2 | Bushing-Pivot |
| 14 | 105-0945 | 1 | Sleeve-Pivot |
| 15 | 110-4625-03 | 1 | Arm-Idler, LH |
| 16 | 3256-6 | 1 | Washer-Flat |
| 17 | 325-14 | 1 | Screw-HH |

| Ref. | Part Number | Qty. | Description |
|---|---|---|---|
| 18 | 328-5 | 1 | Screw-HH |
| 19 | 100-7631 | 1 | Pulley-Idler |
| 20 | 3256-28 | 1 | Washer-Flat |
| 21 | 3296-51 | 1 | Nut-Lock, NI |
| 22 | 110-4632 | 1 | Spring-Compression |
| 23 | 110-4676 | 1 | Nut-Idler |
| 25 | 110-4327 | 1 | Belt-Banded, 4 Groove |
| 26 | 323-17 | 1 | Screw-HH |
| 27 | 105-4886 | 4 | Nut-Tinnerman |
| 28 | 110-4476-03 | 1 | Support-Guard, Belt |
| 29 | 114-1464-03 | 1 | Shield-Dirt, LH |
| 30 | 110-4475 | 1 | Guard-Belt, LH |
| 31 | 93-8806 | 4 | Washer-Hardened |
| 32 | 3234-24 | 6 | Screw-HHF |
| 33 | 3256-24 | 1 | Washer-Flat |
| 34 | 104-8301 | 3 | Nut-HF, NI |
| 35 | 115-2800 | 1 | Hose |

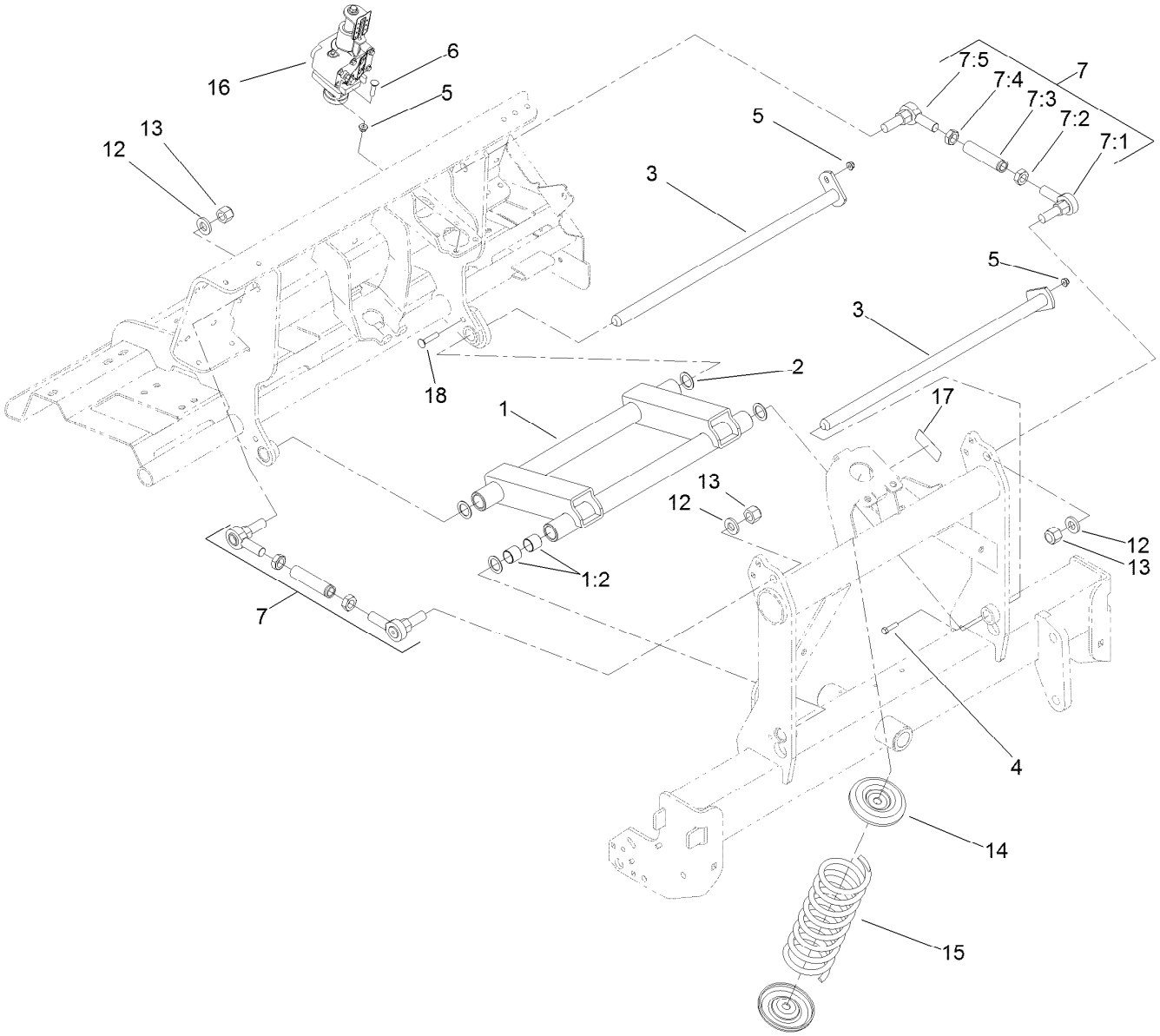


# Left Hand H-Frame Assembly

| Ref. | Part Number | Qty. | Description |
|---|---|---|---|
| 1 | 110-4618 | 1 | H-Frame ASM |
| 1:2 | 110-4612 | 8 | Bushing-Straight |
| 2 | 10-8110 | 4 | Washer-Thrust |
| 3 | 110-4456 | 2 | Shaft-Pivot |
| 4 | 323-7 | 1 | Screw-HH |
| 5 | 104-8301 | 6 | Nut-HF, NI |
| 6 | 3231-4 | 4 | Screw-CARR |
| 7 | 115-2821 | 2 | Link ASM |
| 7:1 | 105-1025 | 1 | End-Rod |
| 7:2 | 3220-17 | 1 | Nut-Jam, LH |

| Ref. | Part Number | Qty. | Description |
|---|---|---|---|
| 7:3 | 110-4251 | 1 | Link-Upper |
| 7:4 | 3220-7 | 1 | Nut-Jam |
| 7:5 | 2411-40 | 1 | End-Rod |
| 12 | 92-5836 | 3 | Washer |
| 13 | 3296-50 | 4 | Nut-Lock, NI |
| 14 | 110-4287-03 | 2 | Cup-Spring |
| 15 | 105-4183-01 | 1 | Spring-Compression |
| 16 | 115-2844 | 1 | Depth Control ASM |
| 17 | 93-6696 | 1 | Decal-Warning |
| 18 | 3231-5 | 1 | Screw-CARR |

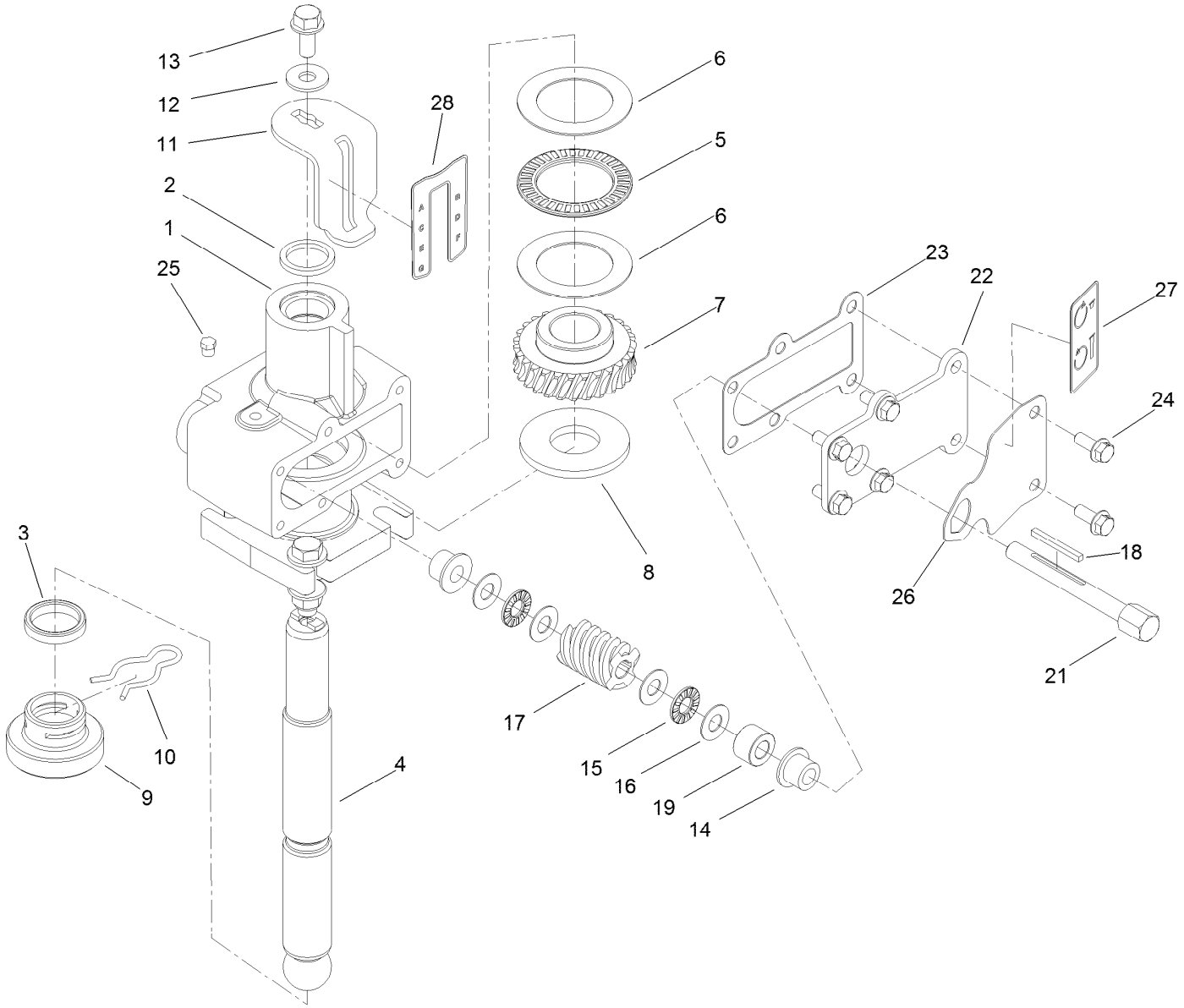


# Depth Control Assembly No. 115-2844

| Ref. | Part Number | Qty. | Description |
|---|---|---|---|
| 1 | 110-4531 | 1 | Hub-Control, Depth |
| 2 | 253-59 | 1 | Seal-Oil |
| 3 | 7-0045 | 1 | Seal-Oil |
| 4 | 110-4534 | 1 | Shaft-Control, Depth |
| 5 | 110-4600 | 1 | Bearing-Thrust |
| 6 | 110-4602 | 2 | Washer-Bearing |
| 7 | 110-4582 | 1 | Gear-Worm, Depth Control |
| 8 | 112-4953 | 1 | Washer-Plain |
| 9 | 110-4438 | 1 | Shoe-Control, Depth |
| 10 | 110-4439 | 1 | Clip-Hairpin |
| 11 | 110-4533 | 1 | Gage-Control, Depth |
| 12 | 3256-71 | 1 | Washer-Flat |
| 13 | 3234-5 | 1 | Screw-HHF |
| 14 | 110-4674 | 2 | Bushing-Flange |

| Ref. | Part Number | Qty. | Description |
|---|---|---|---|
| 15 | 110-4599 | 2 | Bearing-Thrust |
| 16 | 73-0041 | 4 | Washer-Thrust |
| 17 | 110-4581 | 1 | Worm-Control, Depth |
| 18 | 110-4536 | 1 | Key-Gear, Worm |
| 19 | 110-4537 | 1 | Spacer-Gear, Worm |
| 21 | 110-4580 | 1 | Shaft-Gear, Worm |
| 22 | 110-4532-03 | 1 | Cover-Control, Depth |
| 23 | 110-4578 | 1 | Gasket-Control, Depth |
| 24 | 3234-33 | 6 | Screw-HHF |
| 25 | 302-59 | 1 | Plug-EXT Hex Spl |
| 26 | 110-4604 | 1 | Plate-Lock, Depth |
| 27 | 110-4677 | 1 | Decal-Rotation, Depth |
| 28 | 110-4678 | 1 | Decal-Designation, Depth |

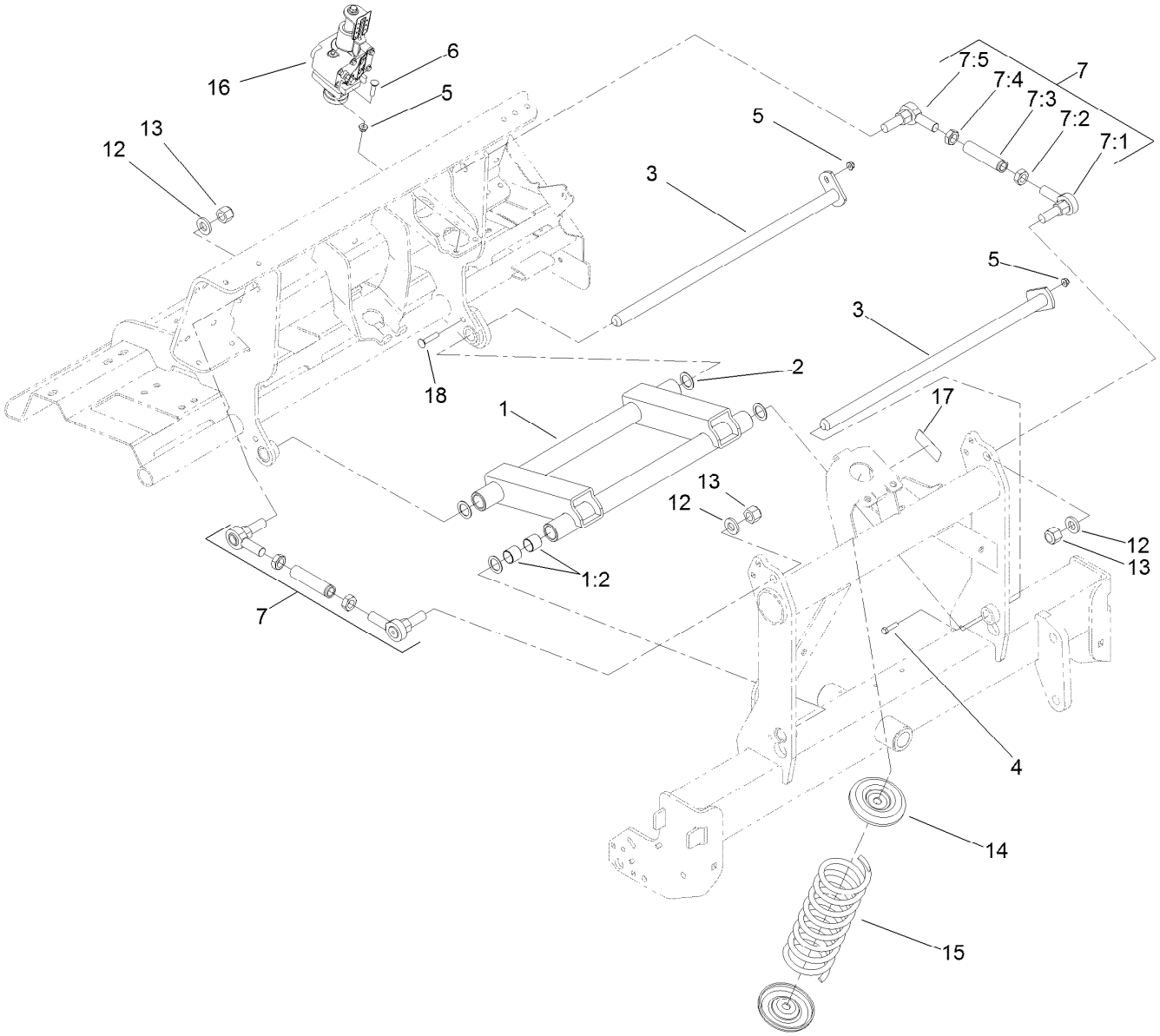


# Left Hand H-Frame Assembly

| Ref. | Part Number | Qty. | Description |
|---|---|---|---|
| 1 | 110-4618 | 1 | H-Frame ASM |
| 1:2 | 110-4612 | 8 | Bushing-Straight |
| 2 | 10-8110 | 4 | Washer-Thrust |
| 3 | 110-4456 | 2 | Shaft-Pivot |
| 4 | 323-7 | 1 | Screw-HH |
| 5 | 104-8301 | 6 | Nut-HF, NI |
| 6 | 3231-4 | 4 | Screw-CARR |
| 7 | 115-2821 | 2 | Link ASM |
| 7:1 | 105-1025 | 1 | End-Rod |
| 7:2 | 3220-17 | 1 | Nut-Jam, LH |

| Ref. | Part Number | Qty. | Description |
|---|---|---|---|
| 7:3 | 110-4251 | 1 | Link-Upper |
| 7:4 | 3220-7 | 1 | Nut-Jam |
| 7:5 | 2411-40 | 1 | End-Rod |
| 12 | 92-5836 | 3 | Washer |
| 13 | 3296-50 | 4 | Nut-Lock, NI |
| 14 | 110-4287-03 | 2 | Cup-Spring |
| 15 | 105-4183-01 | 1 | Spring-Compression |
| 16 | 115-2844 | 1 | Depth Control ASM |
| 17 | 93-6696 | 1 | Decal-Warning |
| 18 | 3231-5 | 1 | Screw-CARR |

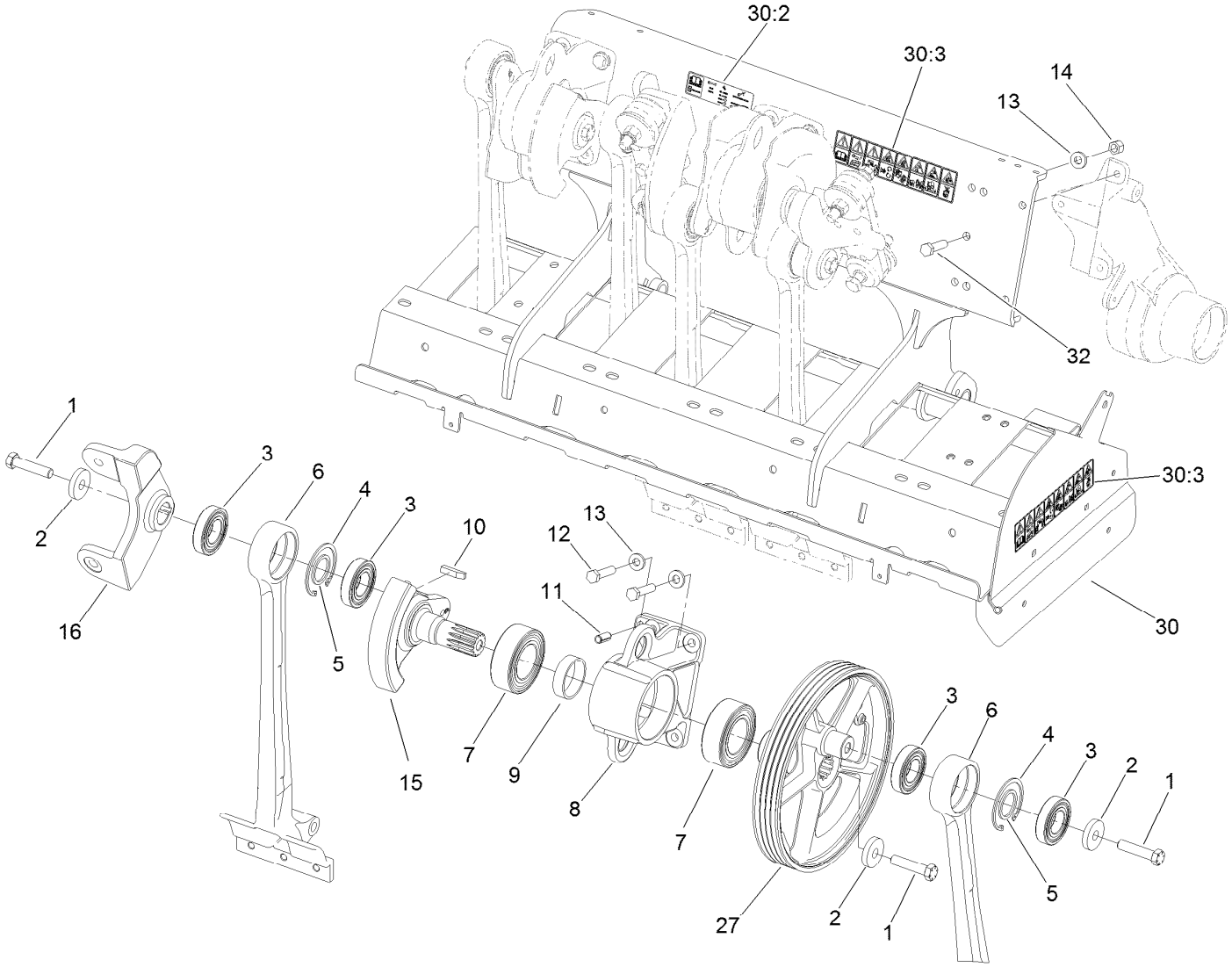


# Right Hand No. 1 and No. 2 Crankarm Assembly

| Ref. | Part Number | Qty. | Description |
|---|---|---|---|
| 1 | 110-4614 | 3 | Screw-HH |
| 2 | 105-1016 | 3 | Washer-Hardened |
| 3 | 110-4556 | 4 | Bearing-Ball |
| 4 | 32151-76 | 2 | Ring-Retaining, Internal |
| 5 | 110-4557 | 2 | Spacer-Bearing |
| 6 | 110-4573 | 2 | Arm-Stomper |
| 7 | 110-4555 | 2 | Bearing-Ball, 2 Row |
| 8 | 110-4566 | 1 | Housing-Bearing |
| 9 | 110-4584 | 1 | Spacer-Bearing |
| 10 | 110-4546 | 1 | Key-Square |
| 11 | 105-1041 | 2 | Pin-Spring |

| Ref. | Part Number | Qty. | Description |
|---|---|---|---|
| 12 | 325-9 | 4 | Screw-HH |
| 13 | 107-3395 | 7 | Washer-Hardened |
| 14 | 3296-23 | 2 | Nut-Lock, NI |
| 15 | 110-4571 | 1 | Crankarm-No. 2, 4, 6 |
| 16 | 110-4567 | 1 | Coupling-No. 2 |
| 27 | 114-1458 | 1 | Pulley-Crankshaft |
| 30 | 110-4685 | 1 | RH Coring Head Frame ASM |
| 30:2 | 110-4664 | 1 | Decal-Torque, Bolt |
| 30:3 | 110-4670 | 2 | Decal-Warning, CE |
| 32 | 325-8 | 1 | Screw-HH |

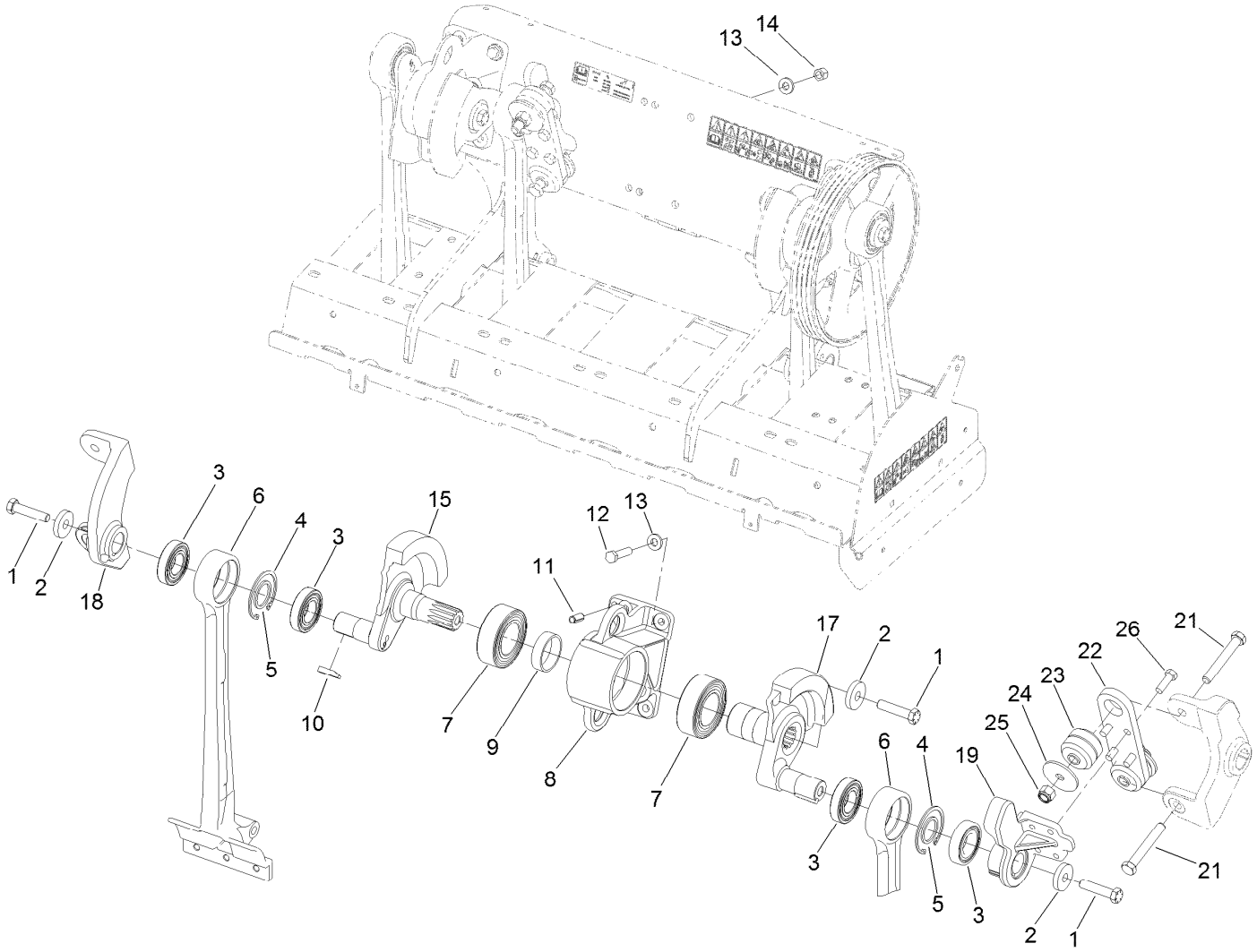


# Right Hand No. 3 and No. 4 Crankarm Assembly

| Ref. | Part Number | Qty. | Description |
|---|---|---|---|
| 1 | 110-4614 | 3 | Screw-HH |
| 2 | 105-1016 | 3 | Washer-Hardened |
| 3 | 110-4556 | 4 | Bearing-Ball |
| 4 | 32151-76 | 2 | Ring-Retaining, Internal |
| 5 | 110-4557 | 2 | Spacer-Bearing |
| 6 | 110-4573 | 2 | Arm-Stomper |
| 7 | 110-4555 | 2 | Bearing-Ball, 2 Row |
| 8 | 110-4566 | 1 | Housing-Bearing |
| 9 | 110-4584 | 1 | Spacer-Bearing |
| 10 | 110-4546 | 2 | Key-Square |
| 11 | 105-1041 | 2 | Pin-Spring |
| 12 | 325-9 | 4 | Screw-HH |

| Ref. | Part Number | Qty. | Description |
|---|---|---|---|
| 13 | 107-3395 | 8 | Washer-Hardened |
| 14 | 3296-23 | 4 | Nut-Lock, NI |
| 15 | 110-4571 | 1 | Crankarm-No. 2, 4, 6 |
| 17 | 110-4572 | 1 | Crankarm-No. 3, 5, 7 |
| 18 | 110-4569 | 1 | Coupling-No.4 |
| 19 | 110-4568 | 1 | Coupling-No. 3 |
| 21 | 327-29 | 2 | Screw-HH |
| 22 | 105-0974-03 | 1 | Plate-Coupling |
| 23 | 105-0963 | 2 | Mount-ISO, Crank |
| 24 | 110-4549 | 2 | Washer-Snubbing |
| 25 | 3296-53 | 2 | Nut-Lock, NI |
| 26 | 325-6 | 4 | Screw-HH |

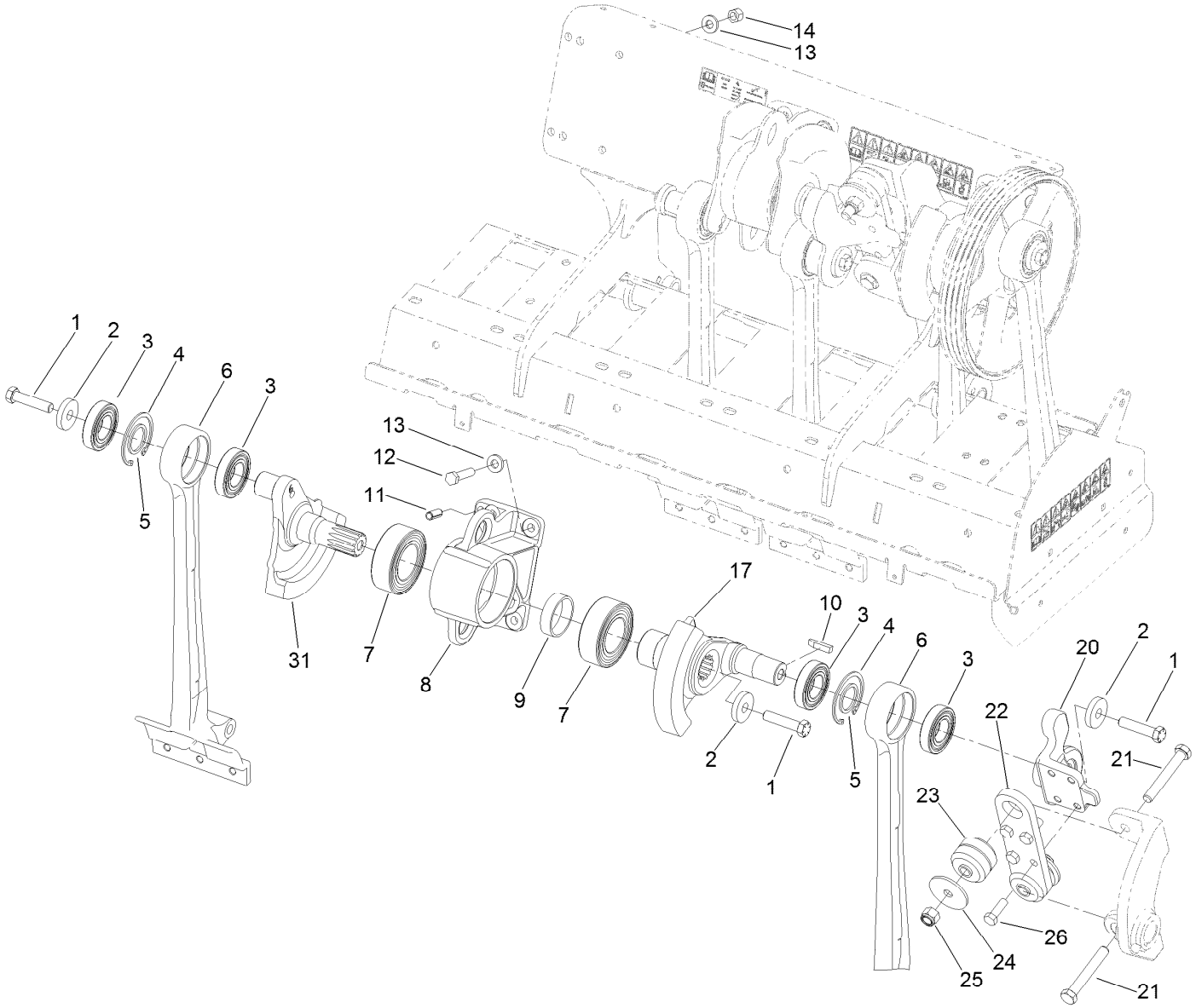


# Right Hand No. 5 and No. 6 Crankarm Assembly

| Ref. | Part Number | Qty. | Description |
|---|---|---|---|
| 1 | 110-4614 | 3 | Screw-HH |
| 2 | 105-1016 | 3 | Washer-Hardened |
| 3 | 110-4556 | 4 | Bearing-Ball |
| 4 | 32151-76 | 2 | Ring-Retaining, Internal |
| 5 | 110-4557 | 2 | Spacer-Bearing |
| 6 | 110-4573 | 2 | Arm-Stomper |
| 7 | 110-4555 | 2 | Bearing-Ball, 2 Row |
| 8 | 110-4566 | 1 | Housing-Bearing |
| 9 | 110-4584 | 1 | Spacer-Bearing |
| 10 | 110-4546 | 1 | Key-Square |
| 11 | 105-1041 | 2 | Pin-Spring |
| 12 | 325-9 | 4 | Screw-HH |

| Ref. | Part Number | Qty. | Description |
|---|---|---|---|
| 13 | 107-3395 | 8 | Washer-Hardened |
| 14 | 3296-23 | 4 | Nut-Lock, NI |
| 17 | 110-4572 | 1 | Crankarm-No. 3, 5, 7 |
| 20 | 110-4570 | 1 | Coupling-N0.5 |
| 21 | 327-29 | 2 | Screw-HH |
| 22 | 105-0974-03 | 1 | Plate-Coupling |
| 23 | 105-0963 | 2 | Mount-ISO, Crank |
| 24 | 110-4549 | 2 | Washer-Snubbing |
| 25 | 3296-53 | 2 | Nut-Lock, NI |
| 26 | 325-6 | 4 | Screw-HH |
| 31 | 110-4576 | 1 | Crankarm-No.6 |

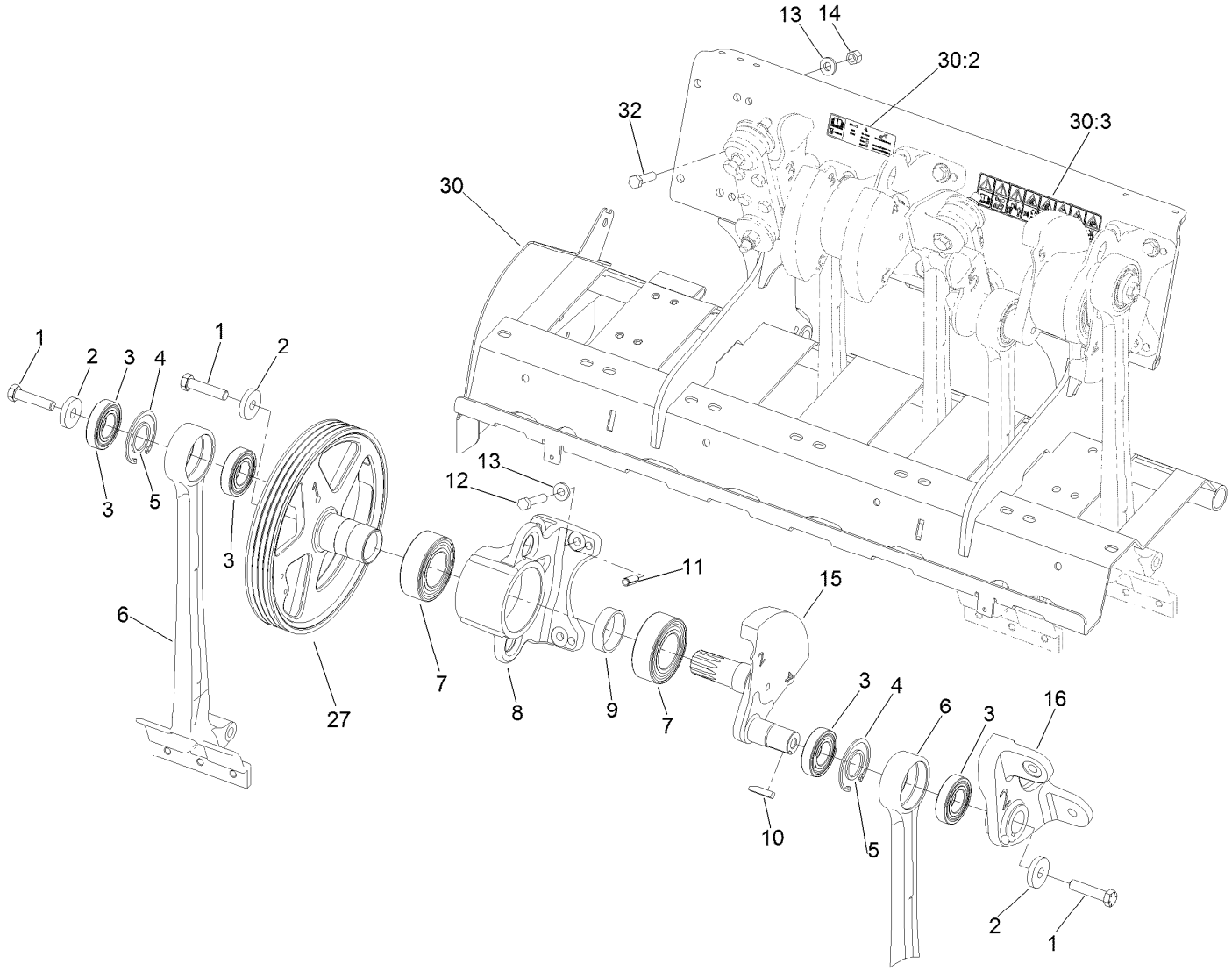


# Left Hand No. 1 and No. 2 Crankarm Assembly

| Ref. | Part Number | Qty. | Description |
|---|---|---|---|
| 1 | 110-4614 | 3 | Screw-HH |
| 2 | 105-1016 | 3 | Washer-Hardened |
| 3 | 110-4556 | 4 | Bearing-Ball |
| 4 | 32151-76 | 2 | Ring-Retaining, Internal |
| 5 | 110-4557 | 2 | Spacer-Bearing |
| 6 | 110-4573 | 2 | Arm-Stomper |
| 7 | 110-4555 | 2 | Bearing-Ball, 2 Row |
| 8 | 110-4566 | 1 | Housing-Bearing |
| 9 | 110-4584 | 1 | Spacer-Bearing |
| 10 | 110-4546 | 1 | Key-Square |
| 11 | 105-1041 | 2 | Pin-Spring |

| Ref. | Part Number | Qty. | Description |
|---|---|---|---|
| 12 | 325-9 | 4 | Screw-HH |
| 13 | 107-3395 | 7 | Washer-Hardened |
| 14 | 3296-23 | 2 | Nut-Lock, NI |
| 15 | 110-4571 | 1 | Crankarm-No. 2, 4, 6 |
| 16 | 110-4567 | 1 | Coupling-No. 2 |
| 27 | 114-1458 | 1 | Pulley-Crankshaft |
| 30 | 110-4686 | 1 | LH Coring Head Frame ASM |
| 30:2 | 110-4664 | 1 | Decal-Torque, Bolt |
| 30:3 | 110-4670 | 2 | Decal-Warning, CE |
| 32 | 325-8 | 1 | Screw-HH |

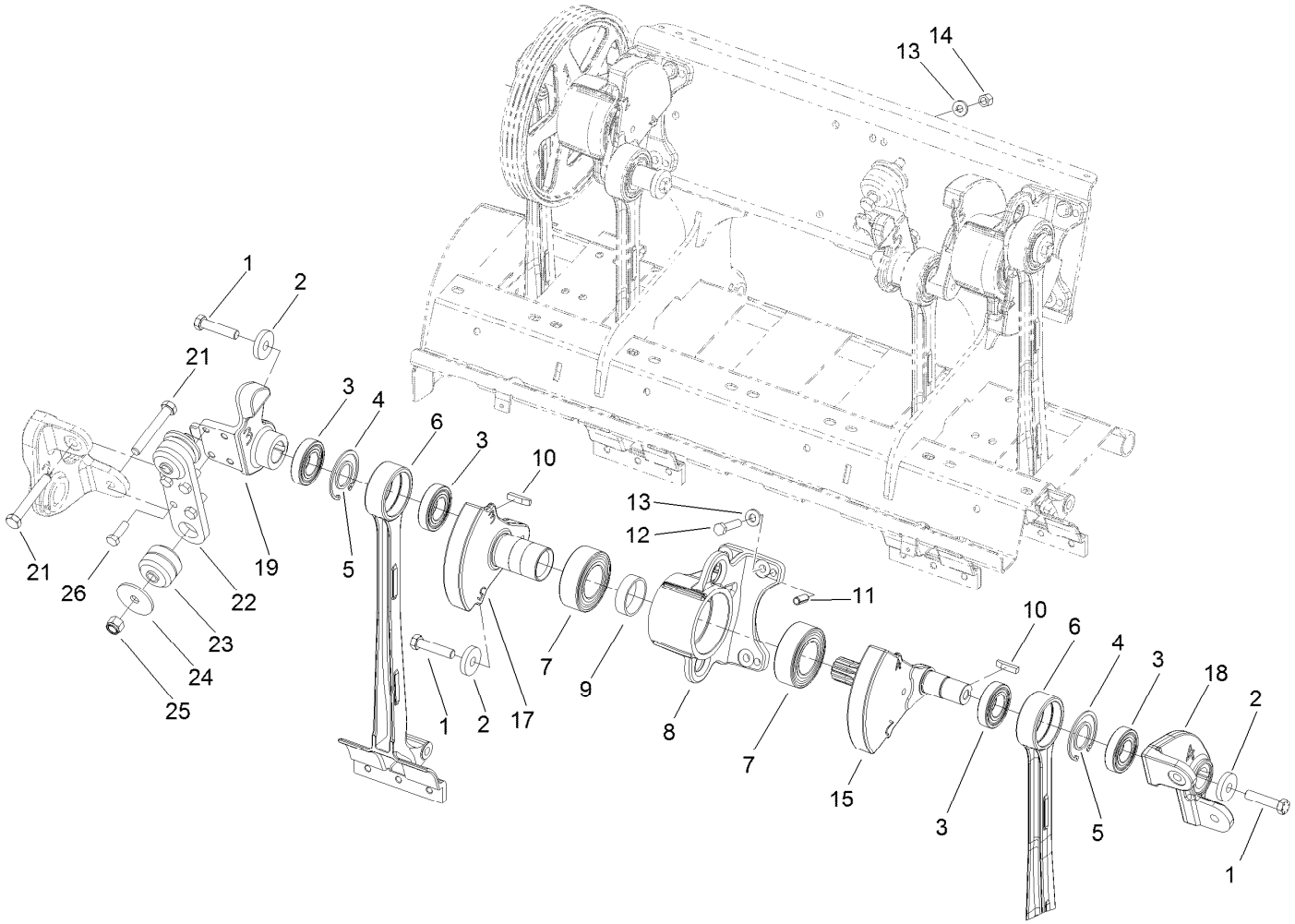


# Left Hand No. 3 and No. 4 Crankarm Assembly

| Ref. | Part Number | Qty. | Description |
|---|---|---|---|
| 1 | 110-4614 | 3 | Screw-HH |
| 2 | 105-1016 | 3 | Washer-Hardened |
| 3 | 110-4556 | 4 | Bearing-Ball |
| 4 | 32151-76 | 2 | Ring-Retaining, Internal |
| 5 | 110-4557 | 2 | Spacer-Bearing |
| 6 | 110-4573 | 2 | Arm-Stomper |
| 7 | 110-4555 | 2 | Bearing-Ball, 2 Row |
| 8 | 110-4566 | 1 | Housing-Bearing |
| 9 | 110-4584 | 1 | Spacer-Bearing |
| 10 | 110-4546 | 2 | Key-Square |
| 11 | 105-1041 | 2 | Pin-Spring |
| 12 | 325-9 | 4 | Screw-HH |

| Ref. | Part Number | Qty. | Description |
|---|---|---|---|
| 13 | 107-3395 | 8 | Washer-Hardened |
| 14 | 3296-23 | 4 | Nut-Lock, NI |
| 15 | 110-4571 | 1 | Crankarm-No. 2, 4, 6 |
| 17 | 110-4572 | 1 | Crankarm-No. 3, 5, 7 |
| 18 | 110-4569 | 1 | Coupling-No.4 |
| 19 | 110-4568 | 1 | Coupling-No. 3 |
| 21 | 327-29 | 2 | Screw-HH |
| 22 | 105-0974-03 | 1 | Plate-Coupling |
| 23 | 105-0963 | 2 | Mount-ISO, Crank |
| 24 | 110-4549 | 2 | Washer-Snubbing |
| 25 | 3296-53 | 2 | Nut-Lock, NI |
| 26 | 325-6 | 4 | Screw-HH |

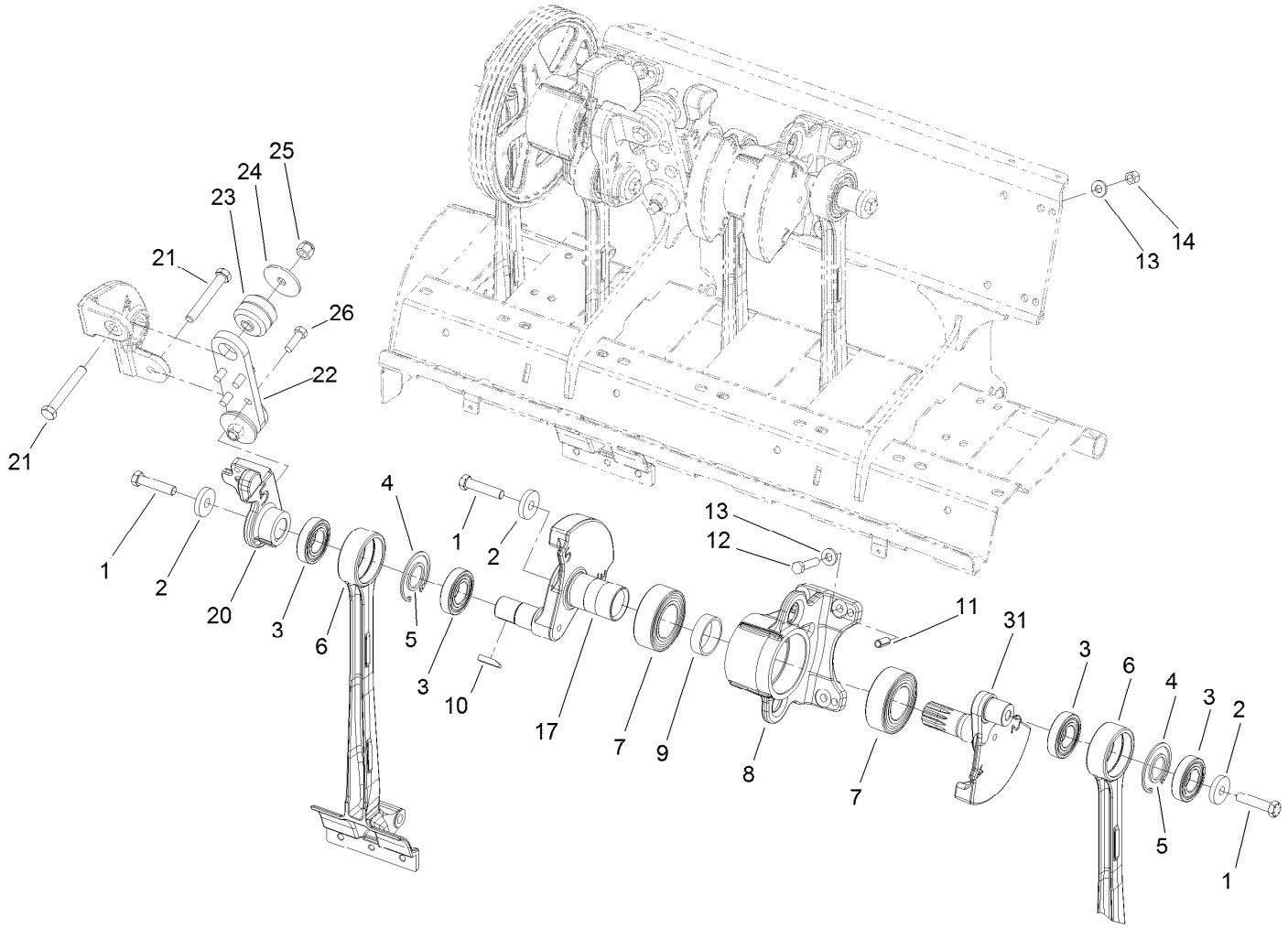


# Left Hand No. 5 and No. 6 Crankarm Assembly

| Ref. | Part Number | Qty. | Description |
|---|---|---|---|
| 1 | 110-4614 | 3 | Screw-HH |
| 2 | 105-1016 | 3 | Washer-Hardened |
| 3 | 110-4556 | 4 | Bearing-Ball |
| 4 | 32151-76 | 2 | Ring-Retaining, Internal |
| 5 | 110-4557 | 2 | Spacer-Bearing |
| 6 | 110-4573 | 2 | Arm-Stomper |
| 7 | 110-4555 | 2 | Bearing-Ball, 2 Row |
| 8 | 110-4566 | 1 | Housing-Bearing |
| 9 | 110-4584 | 1 | Spacer-Bearing |
| 10 | 110-4546 | 1 | Key-Square |
| 11 | 105-1041 | 2 | Pin-Spring |
| 12 | 325-9 | 4 | Screw-HH |

| Ref. | Part Number | Qty. | Description |
|---|---|---|---|
| 13 | 107-3395 | 8 | Washer-Hardened |
| 14 | 3296-23 | 4 | Nut-Lock, NI |
| 17 | 110-4572 | 1 | Crankarm-No. 3, 5, 7 |
| 20 | 110-4570 | 1 | Coupling-N0.5 |
| 21 | 327-29 | 2 | Screw-HH |
| 22 | 105-0974-03 | 1 | Plate-Coupling |
| 23 | 105-0963 | 2 | Mount-ISO, Crank |
| 24 | 110-4549 | 2 | Washer-Snubbing |
| 25 | 3296-53 | 2 | Nut-Lock, NI |
| 26 | 325-6 | 4 | Screw-HH |
| 31 | 110-4576 | 1 | Crankarm-No.6 |

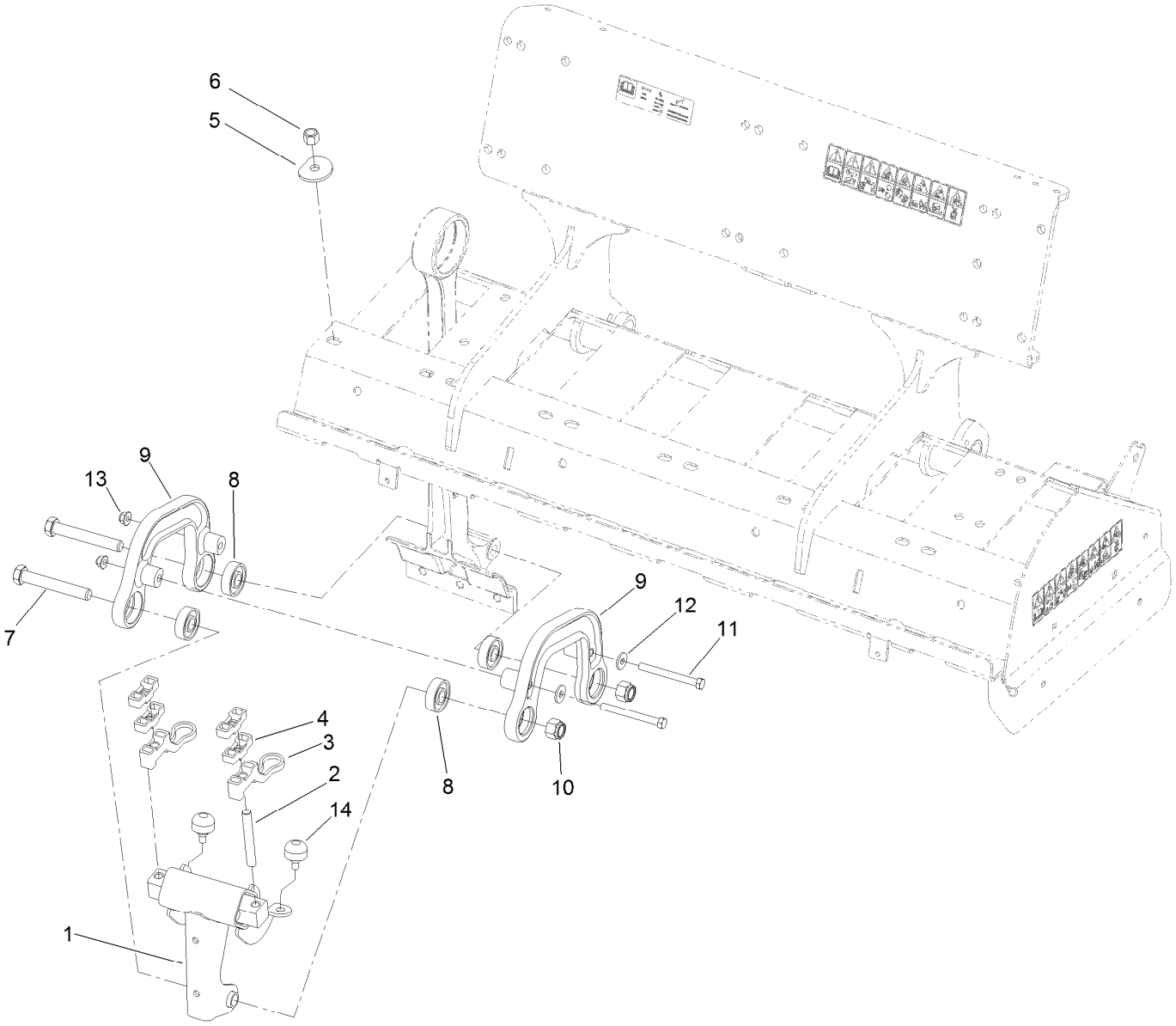


# Roto-Link Damper Assembly

| Ref. | Part Number | Qty. | Description |
|---|---|---|---|
| 1 | 106-8922 | 12 | Damper |
| 2 | 110-4504 | 24 | Stud |
| 3 | 110-4506 | 24 | Bumper-Rotolink |
| 4 | 110-4507 | 48 | Standoff-Rotolink |
| 5 | 107-7543 | 24 | Washer-Hardened |
| 6 | 32128-23 | 24 | Nut-HF |
| 7 | 327-29 | 24 | Screw-HH |
| 8 | 251-311 | 48 | Bearing-Ball |
| 9 | 105-1000 | 24 | Link-Damper |
| 10 | 3296-53 | 24 | Nut-Lock, NI |
| 11 | 323-42 | 24 | Screw-HH |
| 12 | 80-6990 | 24 | Washer-Hardened |
| 13 | 104-8301 | 24 | Nut-HF, NI |
| 14 | 87-2440 | 24 | Bumper-Rubber |

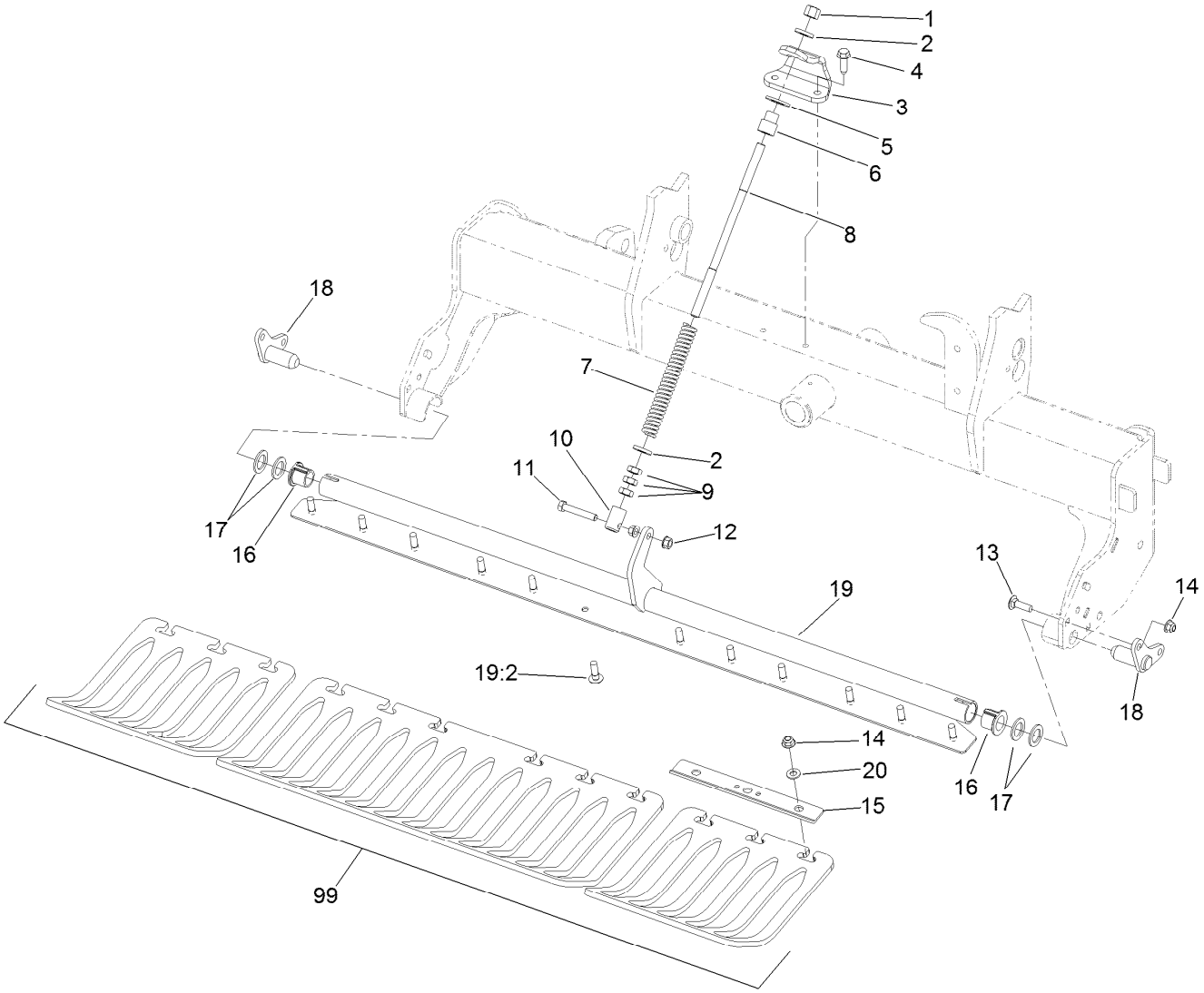


# Right Hand Turf Guard Assembly

| Ref. | Part Number | Qty. | Description |
|---|---|---|---|
| 1 | 3296-23 | 1 | Nut-Lock, NI |
| 2 | 107-3395 | 2 | Washer-Hardened |
| 3 | 110-4267-03 | 1 | Bracket-Spring |
| 4 | 32144-109 | 2 | Screw-Thd |
| 5 | 3256-28 | 1 | Washer-Flat |
| 6 | 110-4416 | 1 | Sleeve-Rod, Spring |
| 7 | 110-4417 | 1 | Spring-Compression |
| 8 | 110-4421 | 1 | Rod-Spring |
| 9 | 3218-5 | 3 | Nut-Jam |
| 10 | 99-8662 | 1 | Tube-Spring |
| 11 | 323-45 | 1 | Screw-HH |
| 12 | 32128-40 | 2 | Nut-Flange |
| 13 | 3231-25 | 4 | Bolt-CARR |
| 14 | 104-8301 | 16 | Nut-HF, NI |

| Ref. | Part Number | Qty. | Description |
|---|---|---|---|
| 15 | 110-4274-03 | 4 | Clamp-Guard, Turf |
| 16 | 107-7581 | 2 | Bushing-Flange, Keyed |
| 17 | 3-7898 | 4 | Washer-Thrust |
| 18 | 110-4296 | 2 | Shaft-Stub |
| 19 | 110-4621 | 1 | Turfguard ASM |
| 19:2 | 125-3318 | 12 | Screw-Neck, Rib |
| 20 | 3256-24 | 12 | Washer-Flat |
| 99 | 120-1044 | 2 | Guard-Turf, 3-Tine (Short) ■ |
| 99 | 120-1045 | 2 | Guard-Turf, 4-Tine (Short) ● ■ |
| 99 | 120-1046 | 1 | Guard-Turf, 4-Tine, Long ● ■ |
| 99 | 120-1047 | 2 | Guard-Turf, 5 Tine, Short ● ■ |
| 99 | 120-1051 | 1 | Guard-Turf, 3-Tine, Long ■ |
| 99 | 120-1052 | 1 | Guard-Turf, 5 Tine, Long ● ■ |

● Not illustrated

■ Optional Equipment

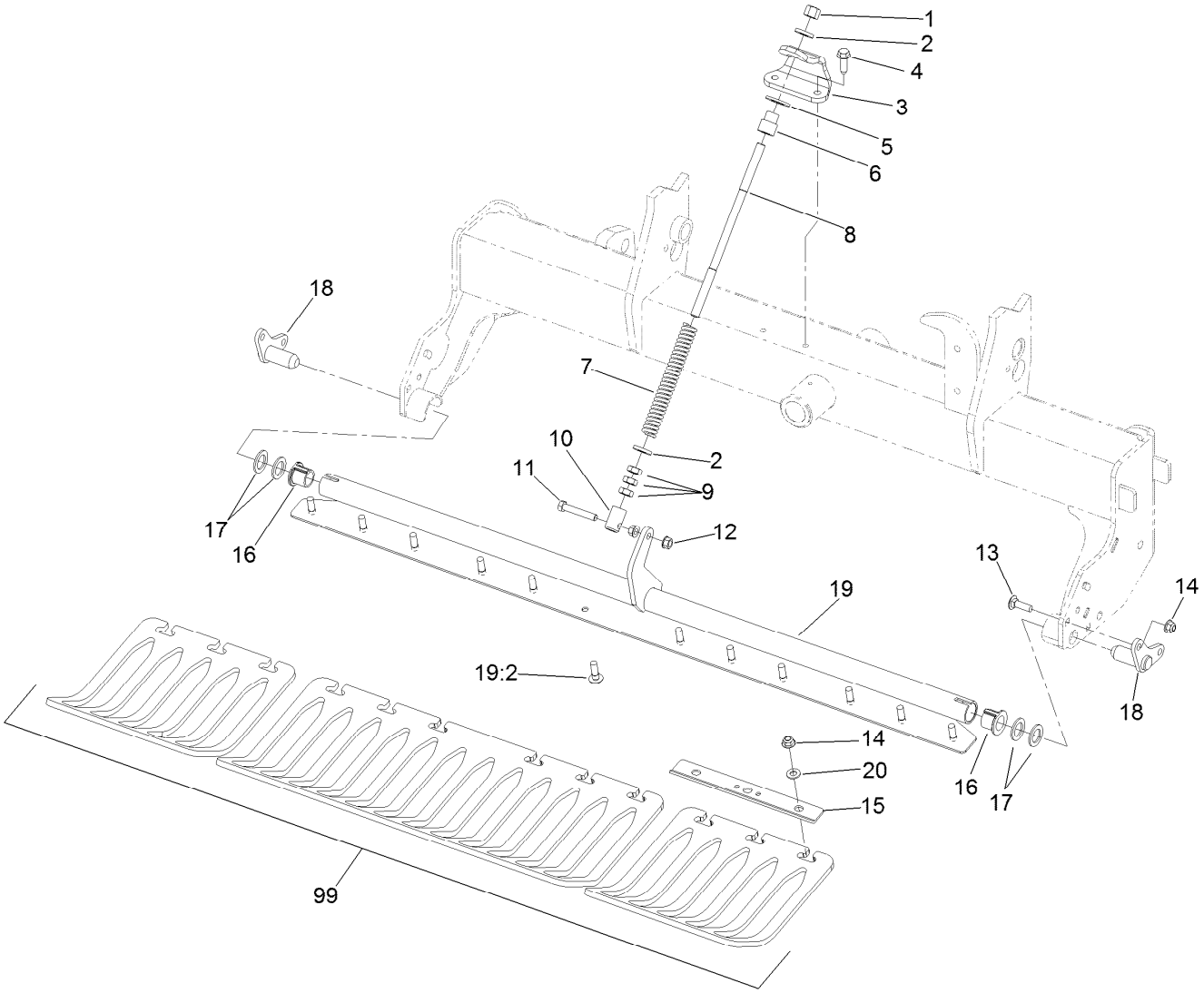


# Left Hand Turf Guard Assembly

| Ref. | Part Number | Qty. | Description |
|---|---|---|---|
| 1 | 3296-23 | 1 | Nut-Lock, NI |
| 2 | 107-3395 | 2 | Washer-Hardened |
| 3 | 110-4267-03 | 1 | Bracket-Spring |
| 4 | 32144-109 | 2 | Screw-Thd |
| 5 | 3256-28 | 1 | Washer-Flat |
| 6 | 110-4416 | 1 | Sleeve-Rod, Spring |
| 7 | 110-4417 | 1 | Spring-Compression |
| 8 | 110-4421 | 1 | Rod-Spring |
| 9 | 3218-5 | 3 | Nut-Jam |
| 10 | 99-8662 | 1 | Tube-Spring |
| 11 | 323-45 | 1 | Screw-HH |
| 12 | 32128-40 | 2 | Nut-Flange |
| 13 | 3231-25 | 4 | Bolt-CARR |
| 14 | 104-8301 | 16 | Nut-HF, NI |

| Ref. | Part Number | Qty. | Description |
|---|---|---|---|
| 15 | 110-4274-03 | 4 | Clamp-Guard, Turf |
| 16 | 107-7581 | 2 | Bushing-Flange, Keyed |
| 17 | 3-7898 | 4 | Washer-Thrust |
| 18 | 110-4296 | 2 | Shaft-Stub |
| 19 | 110-4621 | 1 | Turfguard ASM |
| 19:2 | 125-3318 | 12 | Screw-Neck, Rib |
| 20 | 3256-24 | 12 | Washer-Flat |
| 99 | 120-1044 | 2 | Guard-Turf, 3-Tine (Short) ■ |
| 99 | 120-1045 | 2 | Guard-Turf, 4-Tine (Short) ● ■ |
| 99 | 120-1046 | 1 | Guard-Turf, 4-Tine, Long ● ■ |
| 99 | 120-1047 | 2 | Guard-Turf, 5 Tine, Short ● ■ |
| 99 | 120-1051 | 1 | Guard-Turf, 3-Tine, Long ■ |
| 99 | 120-1052 | 1 | Guard-Turf, 5 Tine, Long ● ■ |

● Not illustrated

■ Optional Equipment

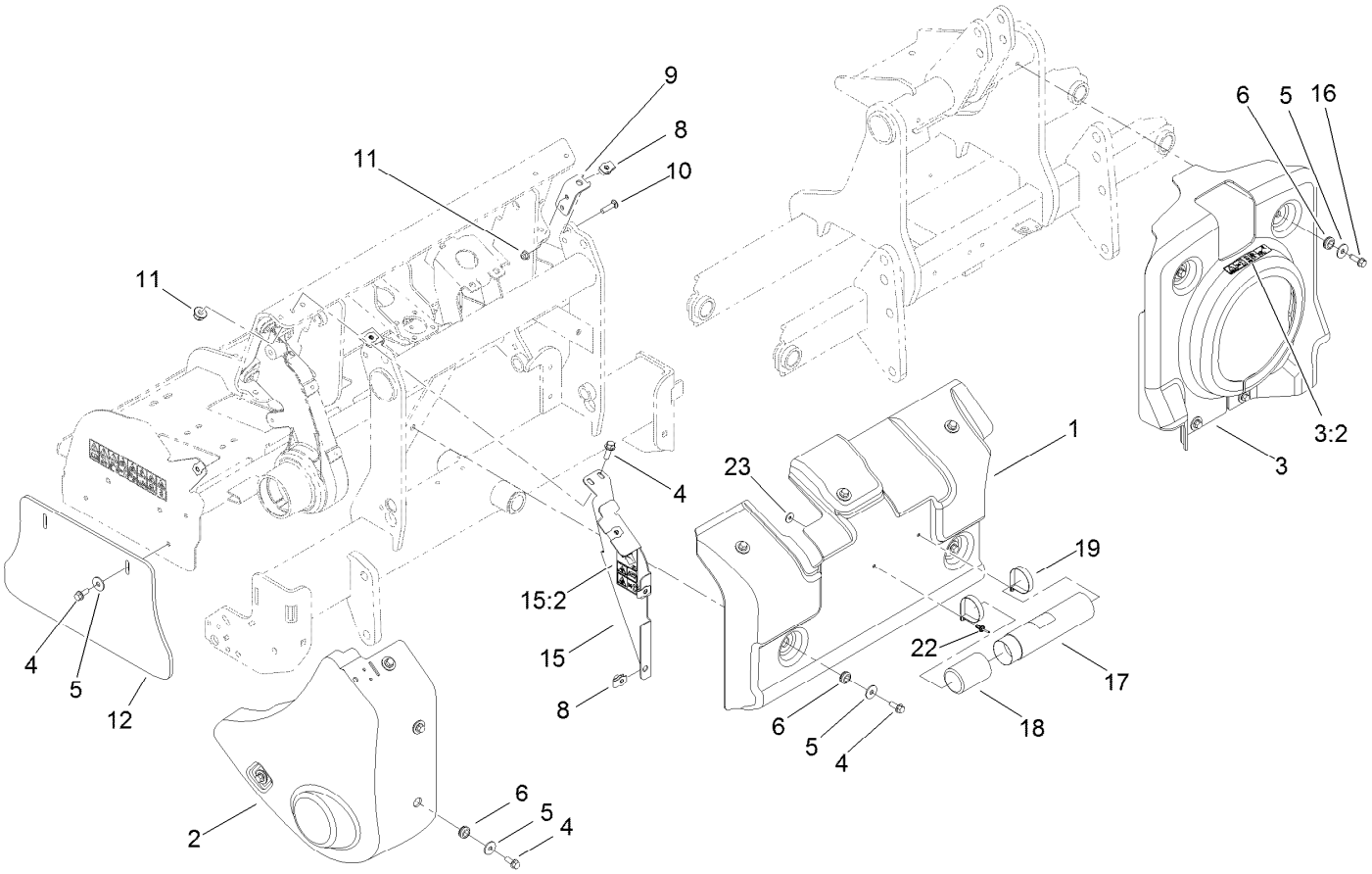


# Right Hand Front Cover Assembly

| Ref. | Part Number | Qty. | Description |
|---|---|---|---|
| 1 | 110-4468 | 1 | Cover-Front, RH |
| 2 | 110-4466 | 1 | Shield-Pulley, RH |
| 3 | 110-4683 | 1 | Yoke Cover ASM |
| 3:2 | 110-4668 | 1 | Decal-Warning, PTO |
| 4 | 3234-24 | 15 | Screw-HHF |
| 5 | 93-8806 | 15 | Washer-Hardened |
| 6 | 110-4697 | 13 | Mount-Isolated |
| 8 | 105-4886 | 7 | Nut-Tinnerman |
| 9 | 110-4478 | 2 | Support-Cover, Front |
| 10 | 3231-25 | 4 | Bolt-CARR |

| Ref. | Part Number | Qty. | Description |
|---|---|---|---|
| 11 | 104-8301 | 8 | Nut-HF, NI |
| 12 | 105-1069 | 1 | Shield-Side |
| 15 | 110-4680 | 1 | RH Shield Support ASM |
| 15:2 | 110-4667 | 1 | Decal-Warning, Spring |
| 16 | 32144-109 | 4 | Screw-Thd |
| 17 | 104-7050 | 1 | Tube-Manual |
| 18 | 104-7048 | 1 | Cap-Housing |
| 19 | 2412-120 | 2 | Clamp-R |
| 22 | 114439 | 2 | Rivet-Blind |
| 23 | 3256-61 | 2 | Washer-Flat |

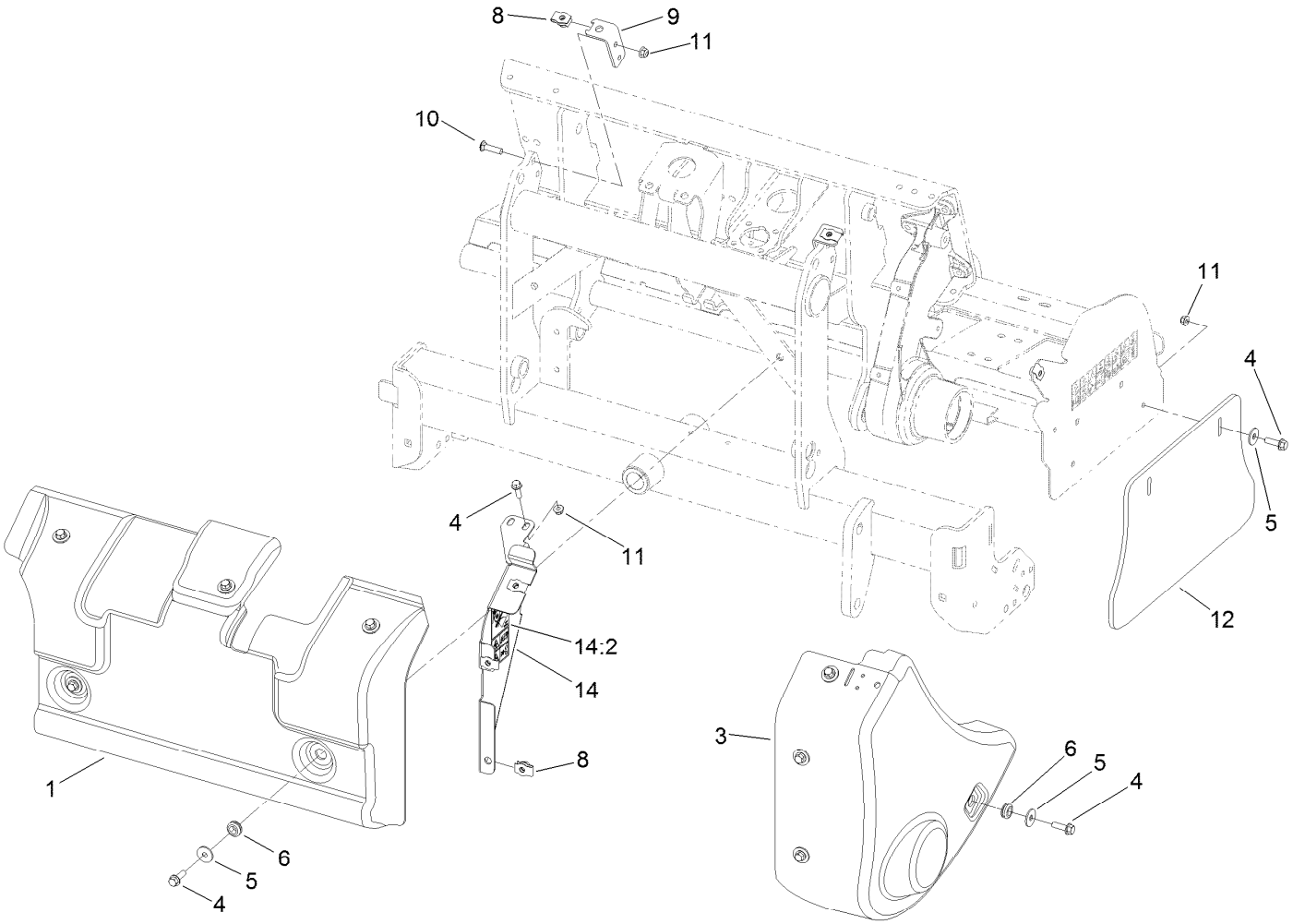


# Left Hand Front Cover Assembly

| *Ref.* | *Part Number* | *Qty.* | *Description* |
|---|---|---|---|
| 1 | 110-4469 | 1 | Cover-Front, LH |
| 3 | 110-4467 | 1 | Shield-Pulley, LH |
| 4 | 3234-24 | 15 | Screw-HHF |
| 5 | 93-8806 | 11 | Washer-Hardened |
| 6 | 110-4697 | 9 | Mount-Isolated |
| 8 | 105-4886 | 7 | Nut-Tinnerman |
| 9 | 110-4478 | 2 | Support-Cover, Front |
| 10 | 3231-25 | 4 | Bolt-CARR |
| 11 | 104-8301 | 8 | Nut-HF, NI |
| 12 | 105-1069 | 1 | Shield-Side |
| 14 | 110-4681 | 1 | LH Shield Support ASM |
| 14:2 | 110-4667 | 1 | Decal-Warning, Spring |

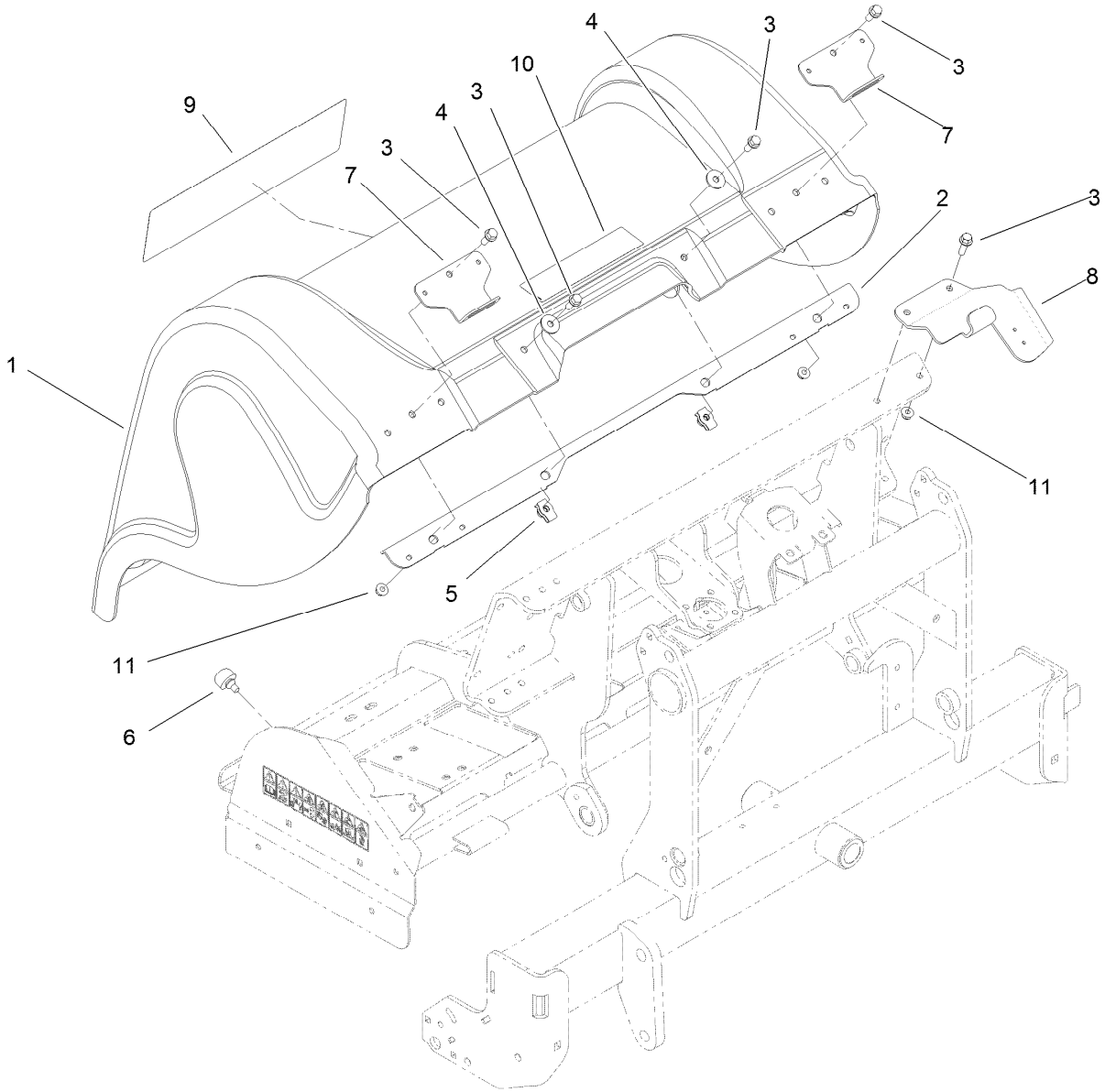


# Right Hand Rear Cover Assembly

| *Ref.* | *Part Number* | *Qty.* | *Description* |
|---|---|---|---|
| 1 | 110-4464 | 1 | Hood-Rear |
| 2 | 110-4481-03 | 1 | Stiffener-Hood |
| 3 | 3234-24 | 6 | Screw-HHF |
| 4 | 93-8806 | 2 | Washer-Hardened |
| 5 | 105-4886 | 2 | Nut-Tinnerman |
| 6 | 87-2440 | 4 | Bumper-Rubber |
| 7 | 110-4552-03 | 2 | Stirrup-Hood |
| 8 | 110-4479-03 | 1 | Mount-Latch, RH |
| 9 | 110-4425 | 1 | Decal-Procore |
| 10 | 106-8856 | 1 | Decal - Tine Depth, CE |
| 11 | 104-8301 | 4 | Nut-HF, NI |

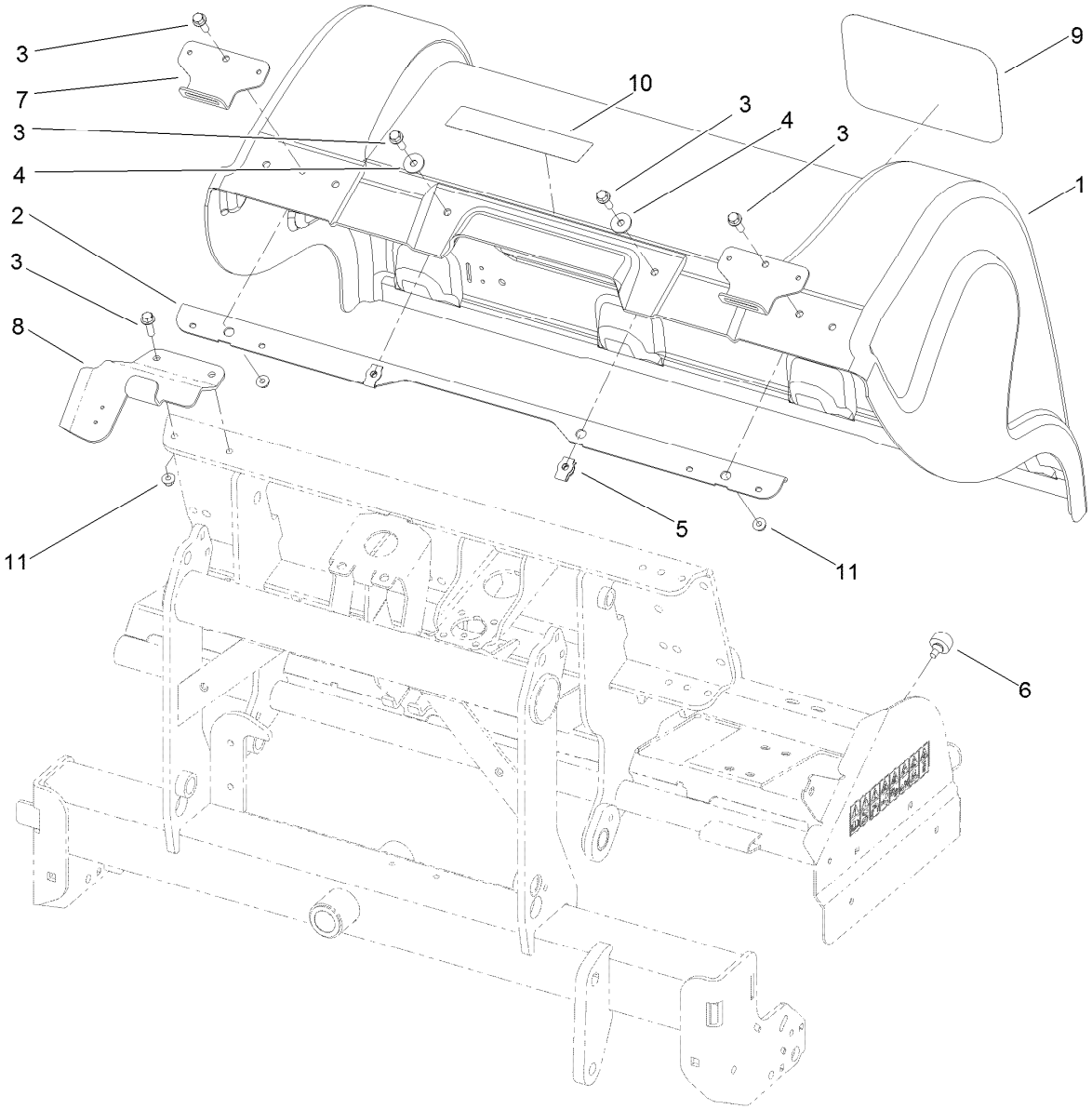


# Left Hand Rear Cover Assembly

| *Ref.* | *Part Number* | *Qty.* | *Description* |
|---|---|---|---|
| 1 | 110-4464 | 1 | Hood-Rear |
| 2 | 110-4481-03 | 1 | Stiffener-Hood |
| 3 | 3234-24 | 6 | Screw-HHF |
| 4 | 93-8806 | 2 | Washer-Hardened |
| 5 | 105-4886 | 2 | Nut-Tinnerman |
| 6 | 87-2440 | 4 | Bumper-Rubber |
| 7 | 110-4552-03 | 2 | Stirrup-Hood |
| 8 | 110-4480-03 | 1 | Mount-Latch, LH |
| 9 | 67-7310 | 1 | Decal |
| 10 | 106-8856 | 1 | Decal - Tine Depth, CE |
| 11 | 104-8301 | 4 | Nut-HF, NI |

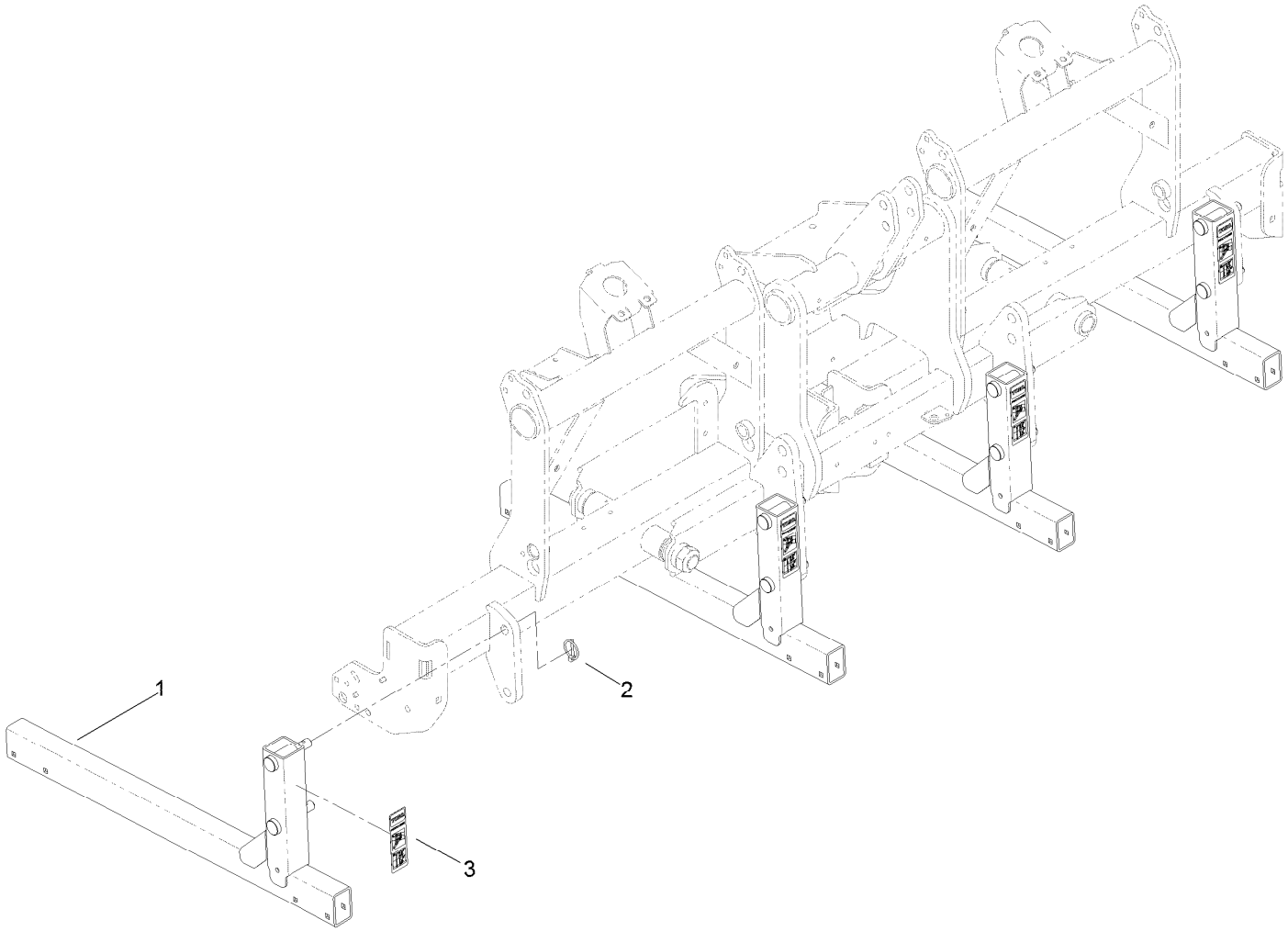


# Storage Stand Assembly

| Ref. | Part Number | Qty. | Description |
|---|---|---|---|
| 1 | 110-4292-03 | 4 | Stand |
| 2 | 92-1298 | 8 | Pin-Lynch |
| 3 | 110-4666 | 4 | Decal-Service, Storage |

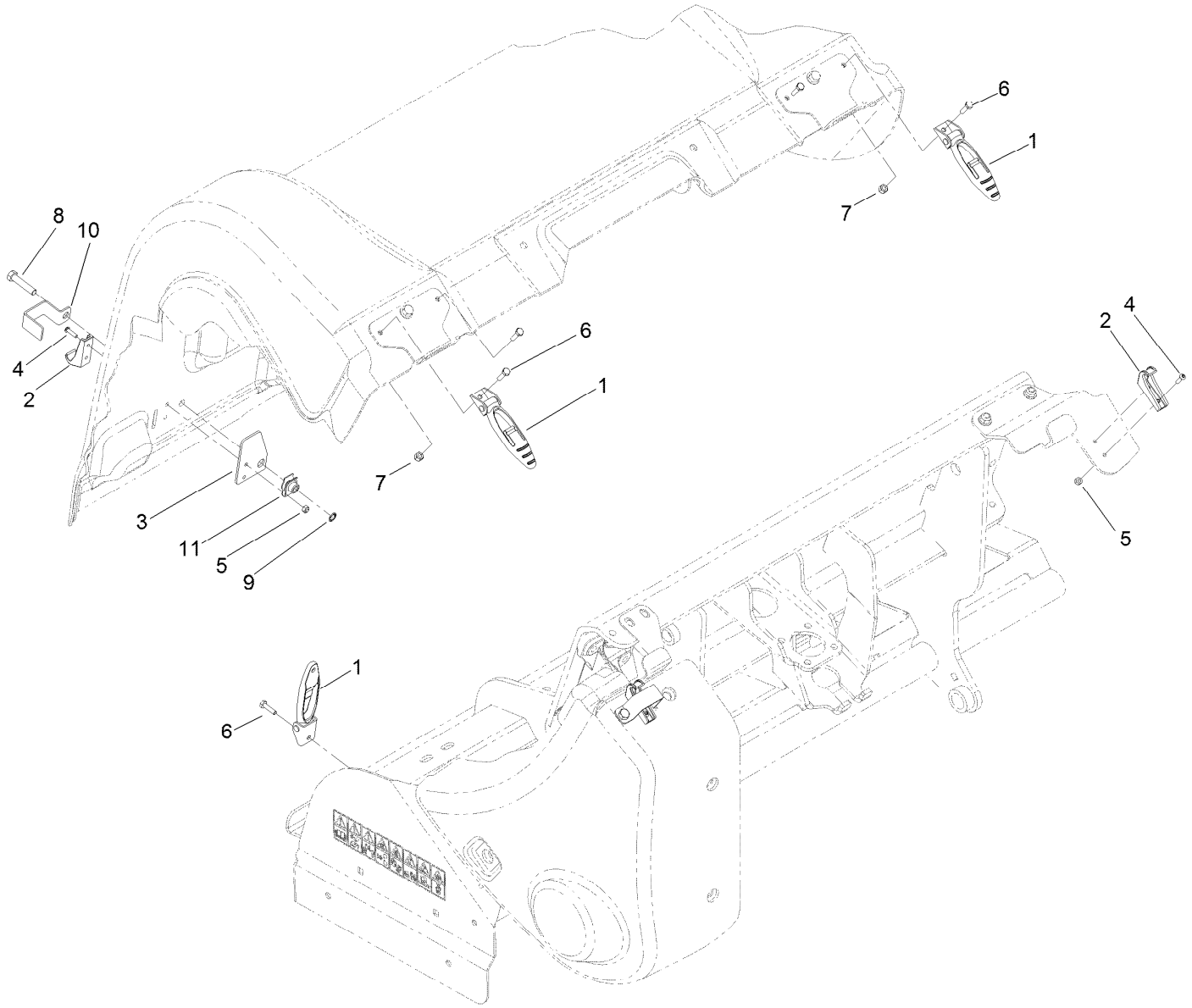


# Cover Latch Assembly

| Ref. | Part Number | Qty. | Description |
|---|---|---|---|
| 1 | 103-2898 | 8 | Latch-Rubber |
| 2 | 103-2897 | 8 | Latch-Catch |
| 3 | 110-4672 | 6 | Plate-Reinforcement |
| 4 | 104-2408 | 16 | Screw-HSBH |
| 5 | 3296-2 | 16 | Nut-Lock, NI |
| 6 | 321-6 | 12 | Screw-HH |
| 7 | 3296-42 | 12 | Nut-Lock, NI |
| 8 | 323-53 | 6 | Screw-HH |
| 9 | 32151-72 | 6 | Ring-Retaining |
| 10 | 110-4673 | 6 | Lock-Latch, CE |
| 11 | 105-4886 | 6 | Nut-Tinnerman |

# Attachments and Accessories

## For 09716 ProCore 1298 Aerator

| Product Name | Model/Part |
|---|---|
| Three-Tine Head Quick Lock | 09711 |
| Four-Tine Head Quick Lock | 09719 |
| 2 x 5 Mini Tine Head | 09736 |
| 1 x 6 Mini Tine Head | 09737 |
| Needle Tine Head | 09739 |
| 3/4in Three-Tine Head | 09794 |
| 3/4in Four-Tine Head | 09796 |
| 7/8in Three-Tine Head | 09797 |
| Premium All Season Gear Lube (5 Gallon Pail) | 108-1187 |
| Premium All Purpose Grease (Tube) | 108-1190 |
| Premium All Season Gear Lube (Quart) | 108-1590 |
| Procore Ce Completion Kit | 110-4693 |
| Sleeve Tool ASM | 114-0590-01 |
| Guarded Driveshaft | 115-2839 |
| Turf Guard 3 Tine (Short) | 120-1044 |
| Turf Guard 4 Tine (Short) | 120-1045 |
| 4-Tine Turf Guard (long) | 120-1046 |
| Turf Guard 5 Tine (Short) | 120-1047 |
| Turf Guard 6 Tine (Short) | 120-1050 |
| 3-Tine Turf Guard (long) | 120-1051 |
| 5-Tine Turf Guard (long) | 120-1052 |
| 6-Tine Turf Guard (long) | 120-1053 |

TORO®

Count on it.