Form No. 3426-888 Rev C

TORO®

Count on it.

Parts Catalog

ProCore® 864

Aerator

Model No. 09715—Serial No. 403410001 and Up

Register at www.Toro.com.
Original Instructions (EN)

CE

3426-888 C

Ordering Replacement Parts

To order replacement parts, please supply the part number, the quantity, and the description of each part desired.

Understanding Reference Numbers

Each identified part in an illustration has a reference number. The reference number for a part also appears in the parts list, along with other information about the part.

This catalog uses two special reference number formats, one to indicate parts in a service assembly and another to indicate the quantity of a given part in an illustration.

Service Assembly Reference Numbers

Parts in service assemblies have reference numbers in the form a:b. The a represents the reference number of the entire service assembly and the b represents a sequential number unique to each part within the service assembly.

For example, a wheel assembly might be identified by reference number 6, the tire by 6:1, the valve by 6:2, and the wheel by 6:3. When you order the assembly identified by reference number 6, you receive all parts identified by reference numbers 6:1,6:2, and 6:3. However, you may also order any part individually. Reference numbers of this type appear in illustration and in parts lists.

Reference Numbers Indicating Quantity

In an illustration, if a reference number indicates more than one part, the reference number has the form nX y. The n represents the quantity of the part, the X is the multiplication symbol, and the y represents the reference number.

For example, in an illustration, the reference number 2X 37 means that two of the parts identified by reference number 37 are indicated.

Contents

Frame Assembly 4
Gearbox and Driveline Assembly 5
Shielded Drive Shaft Assembly No. 110-4283 6
Gearbox Assembly No. 110-4565 7
Drive Shaft Assembly No. 110-4585 8
Roller and Scraper Assembly 9
Right Hand Belt Drive Assembly 10
H-Frame Assembly 11
Depth Control Assembly No. 115-2844 12
No. 1 and No. 2 Crankarm Assembly 13
No. 3 and No. 4 Crankarm Assembly 14
No. 5 and No. 6 Crankarm Assembly 15
No. 7 and No. 8 Crankarm Assembly 16
Roto-Link Damper Assembly 17
Turf Guard Assembly 18
Front Cover Assembly 19
Rear Cover Assembly 20
Storage Stand Assembly 21
Cover Latch Assembly 22
Attachments and Accessories 23

© 2023—The Toro® Company
8111 Lyndale Avenue South
Bloomington, MN 55420

Contact us at www.Toro.com.
Printed in the USA.
All Rights Reserved

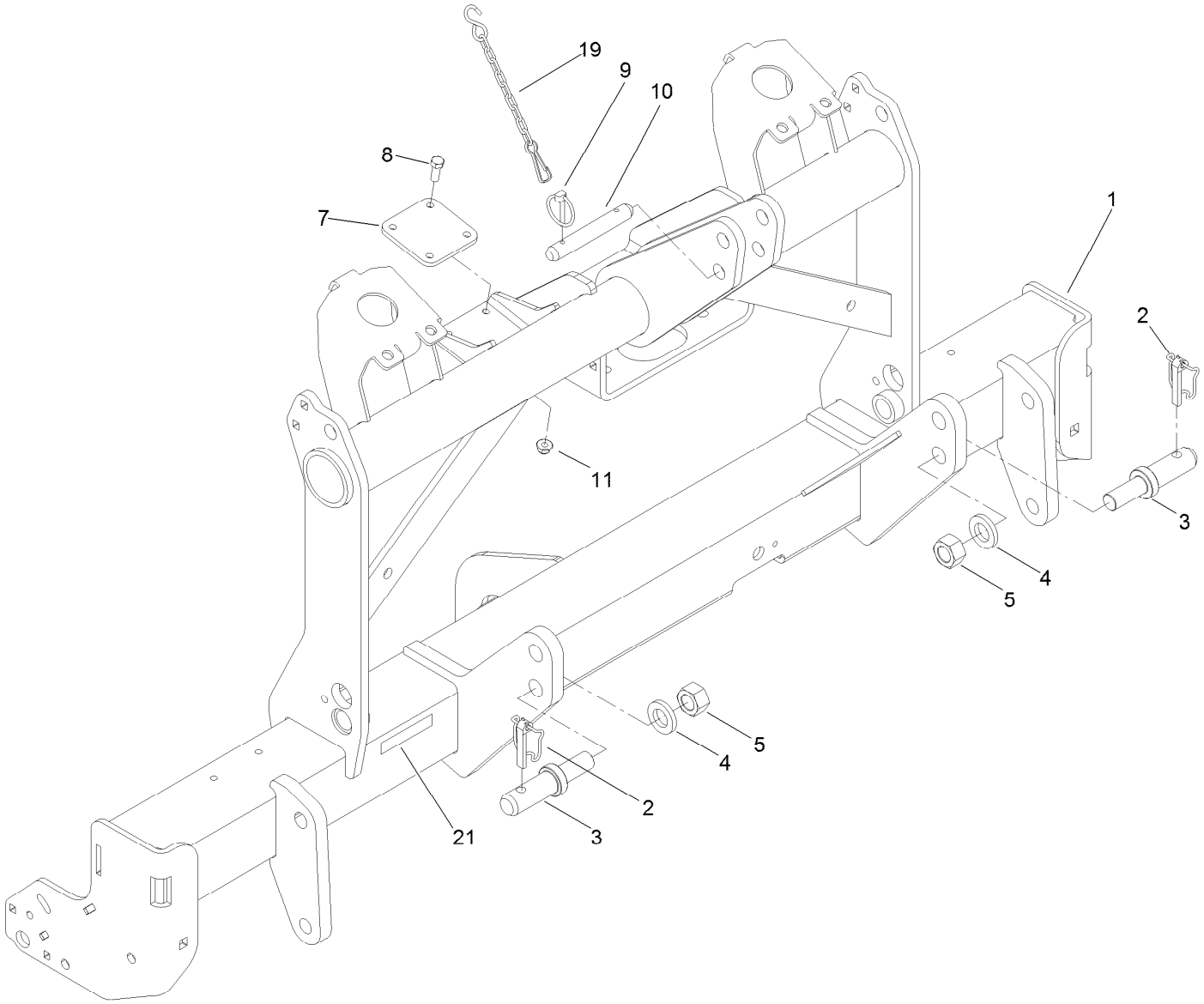

Frame Assembly

Ref.	Part Number	Qty.	Description
1	110-4221-01	1	Frame-Hitch, 3-Pt
2	3290-384	2	Pin-Lynch
3	110-4314	2	Pin-Link, Cat 2
3	110-4315	2	Pin-Link, Cat 1
4	120-5576	2	Washer-Hardened
5	3219-18	2	Nut-Hex
7	110-4440	1	Pad
8	3234-17	4	Screw-HHF
9	92-1298	2	Pin-Lynch
10	92-1233	1	Pin-Clevis
11	104-8300	4	Nut-HF, NI
19	110-4679	1	Chain-Storage, Driveline
21	133-8061	1	Decal-Warning

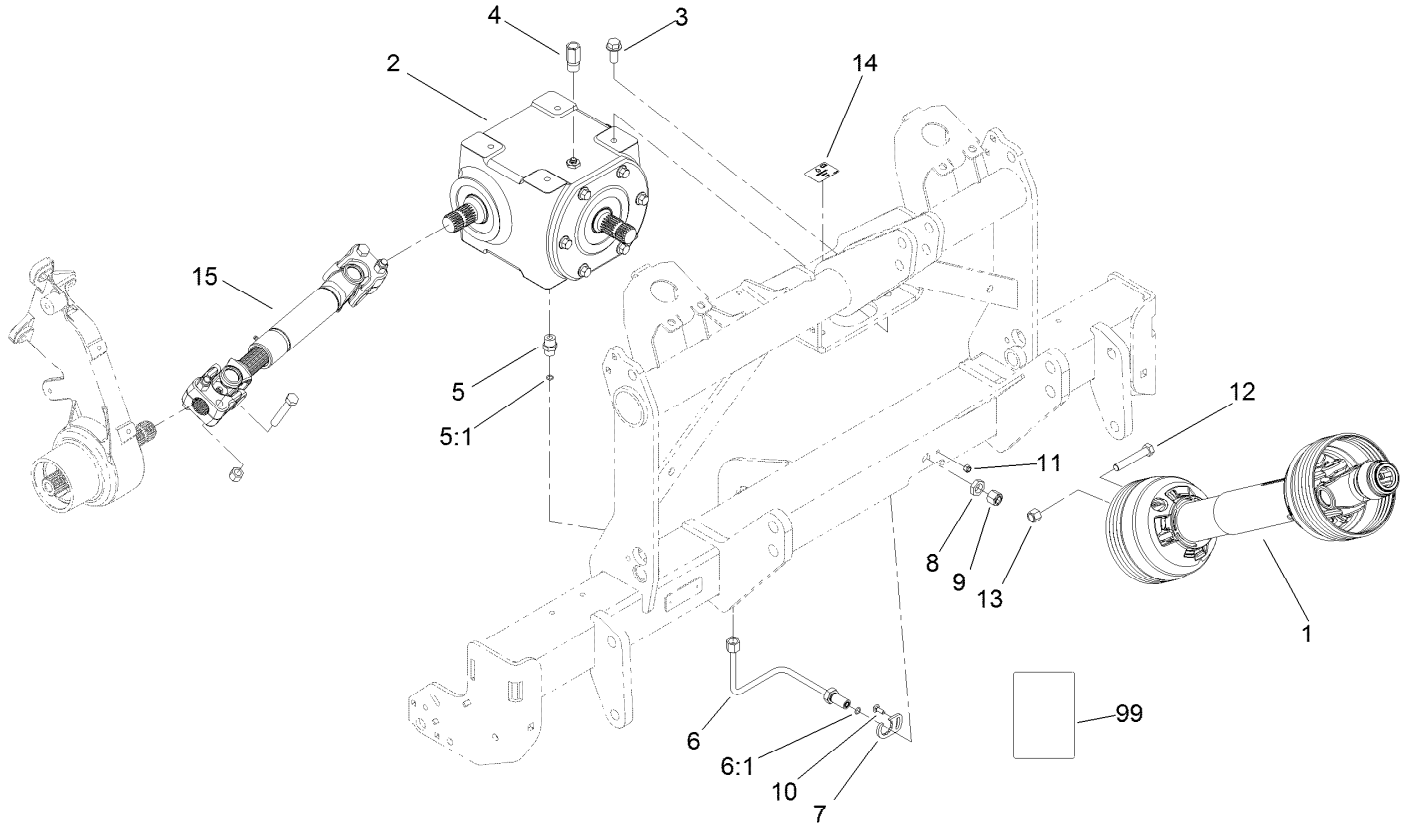

Gearbox and Driveline Assembly

Ref.	Part Number	Qty.	Description
1	110-4283	1	Shielded Driveshaft ASM
2	110-4565	1	Gearbox-T
3	3234-38	4	Screw-HHF
4	110-4590	1	Fitting-Reducer
5	340-124	1	Adapter
5:1	237-22	1	O-Ring
6	110-4335	1	Tube ASM
6:1	237-22	1	O-Ring
7	110-4553	1	Keeper-Hardline
8	340-70	1	Nut-Lock

Ref.	Part Number	Qty.	Description
9	340-117	1	Cap
10	3229-1	1	Screw-CARR
11	3296-42	1	Nut-Lock, NI
12	325-12	5	Screw-HH
13	3296-23	5	Nut-Lock, NI
14	110-4665	1	Decal-Service, Oil
15	110-4585	1	Drive Shaft ASM
99	138-9038	1	Decal-Danger, Entanglement

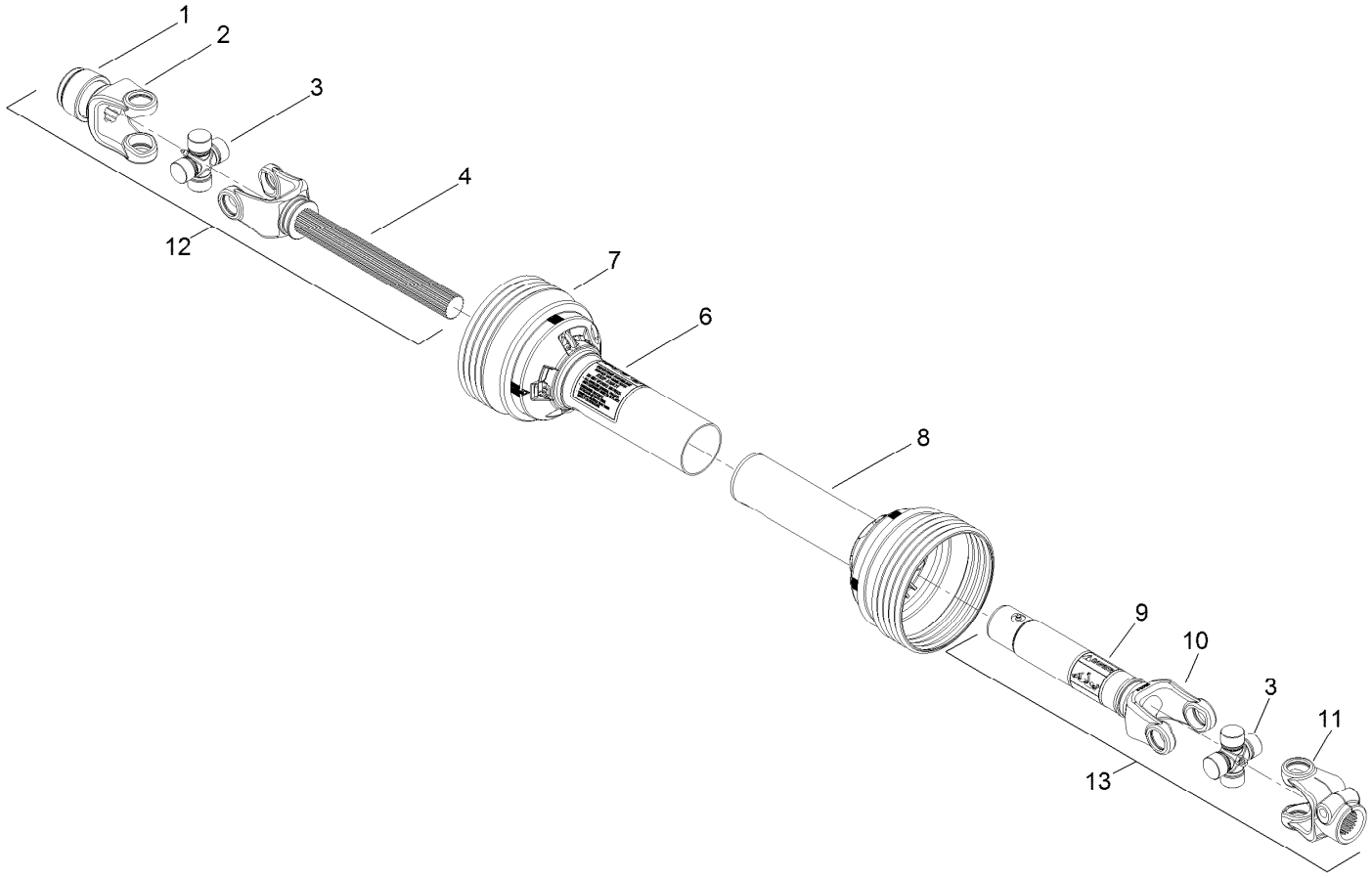

Shielded Drive Shaft Assembly No. 110-4283

Ref.	*Part Number*	*Qty.*	*Description*
1	93-4636	1	Auto-Lok Repair Kit
2		1	Safety Slide Lock Yoke ASM ■
3	110-4635	2	Cross And Bearing Kit
4		1	Yoke And Shaft ASM ■
5	110-4636	2	Guard Repair Kit ●
6	92-1581	1	Decal-Safety
7	110-4637	1	Guard-Outer
8	110-4638	1	Guard-Inner
9	92-1582	1	Decal-Safety
10		1	Yoke And Tube ASM ■
11		1	Yoke ■
12	110-4633	1	Joint And Shaft Half ASM
13	110-4634	1	Joint And Tube Half ASM

● Not illustrated

■ Not serviced separately

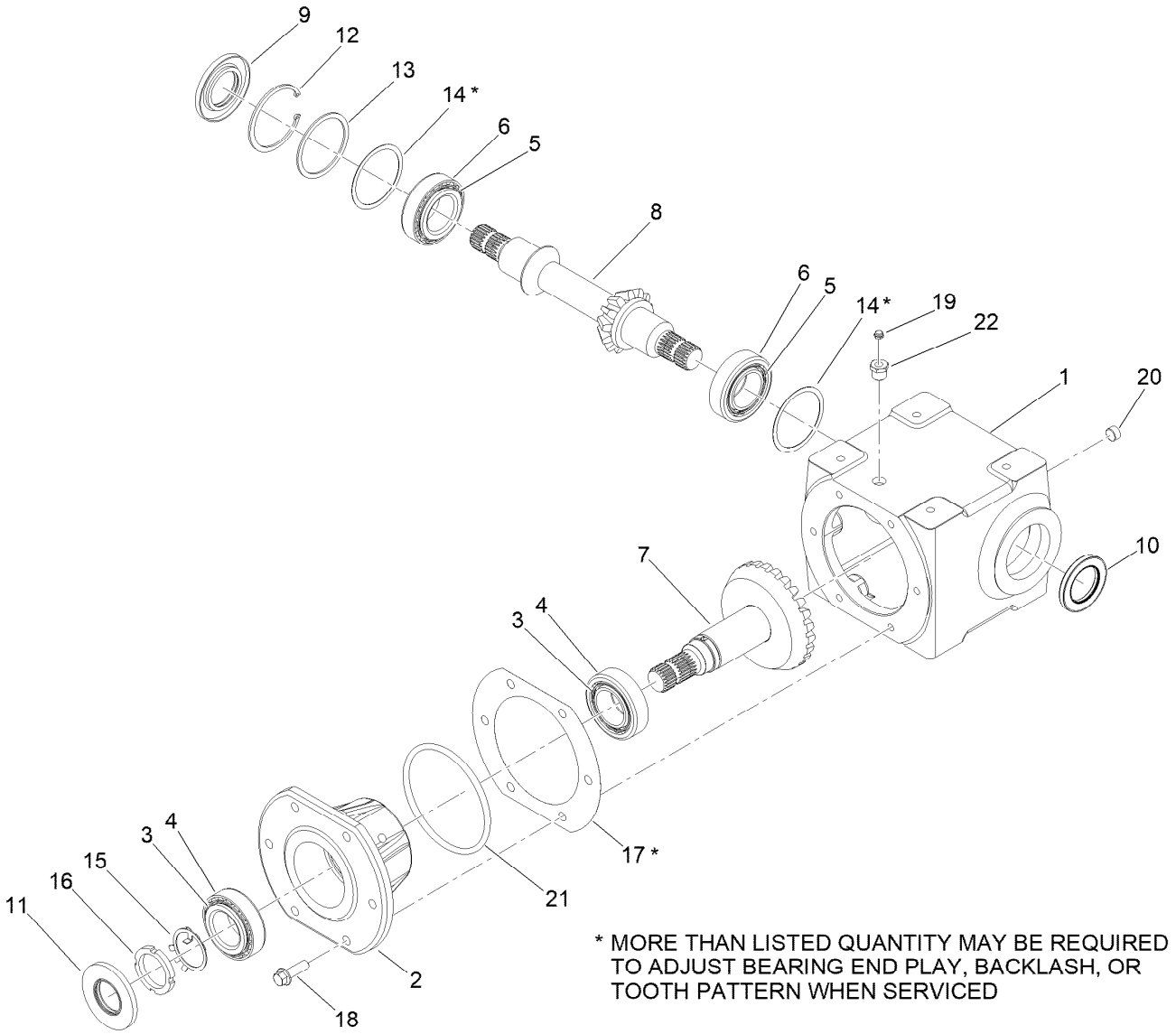

Gearbox Assembly No. 110-4565

Ref.	Part Number	Qty.	Description
1	110-4644	1	Housing
2	110-4645	1	Quill
3	110-4646	2	Cone-Bearing
4	110-4647	2	Cup-Bearing
5	110-4648	2	Cone-Bearing
6	110-4649	2	Cup-Bearing
7	110-4650	1	Gear And Shaft ASM
8	110-4651	1	Shaft-Cross
9	110-4652	1	Seal-Viton
10	110-4653	1	Seal-Viton
11	110-4654	1	Seal-Viton

Ref.	Part Number	Qty.	Description
12	110-4655	1	Ring-Retaining
13	110-4656	1	Shim-Hard
14	110-4657	2	Shim-Soft
15	110-4658	1	Shim-Retaining
16	110-4659	1	Nut-Lock
17	110-4660	1	Gasket
18	33106-045	6	Screw-HHF
19	110-4661	1	Vent-Relief
20	281-3	1	Plug-Pipe, SQH
21	110-4662	1	O-Ring
22	140-2251	1	Adapter

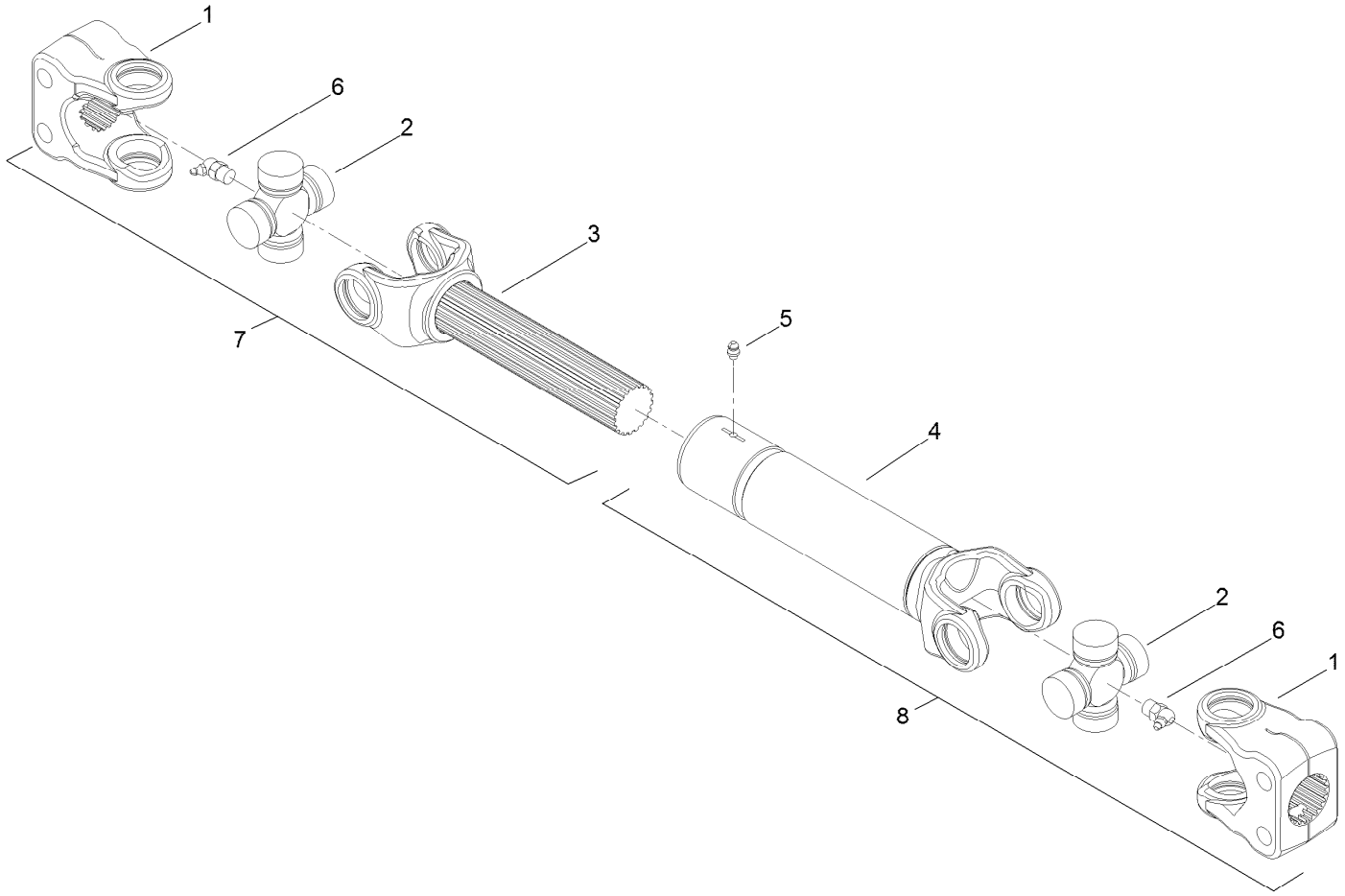

Drive Shaft Assembly No. 110-4585

Ref.	*Part Number*	*Qty.*	*Description*
1		1	Yoke ●
2	110-4641	2	Cross And Bearing Kit
3		1	Yoke And Shaft ASM ●
4		1	Yoke And Tube ASM ●
5		1	Zerk-Grease ●
6		2	Zerk-Grease ●
7	110-4639	1	Joint And Shaft Half ASM
8	110-4640	1	Joint And Tube Half ASM

● Not serviced separately

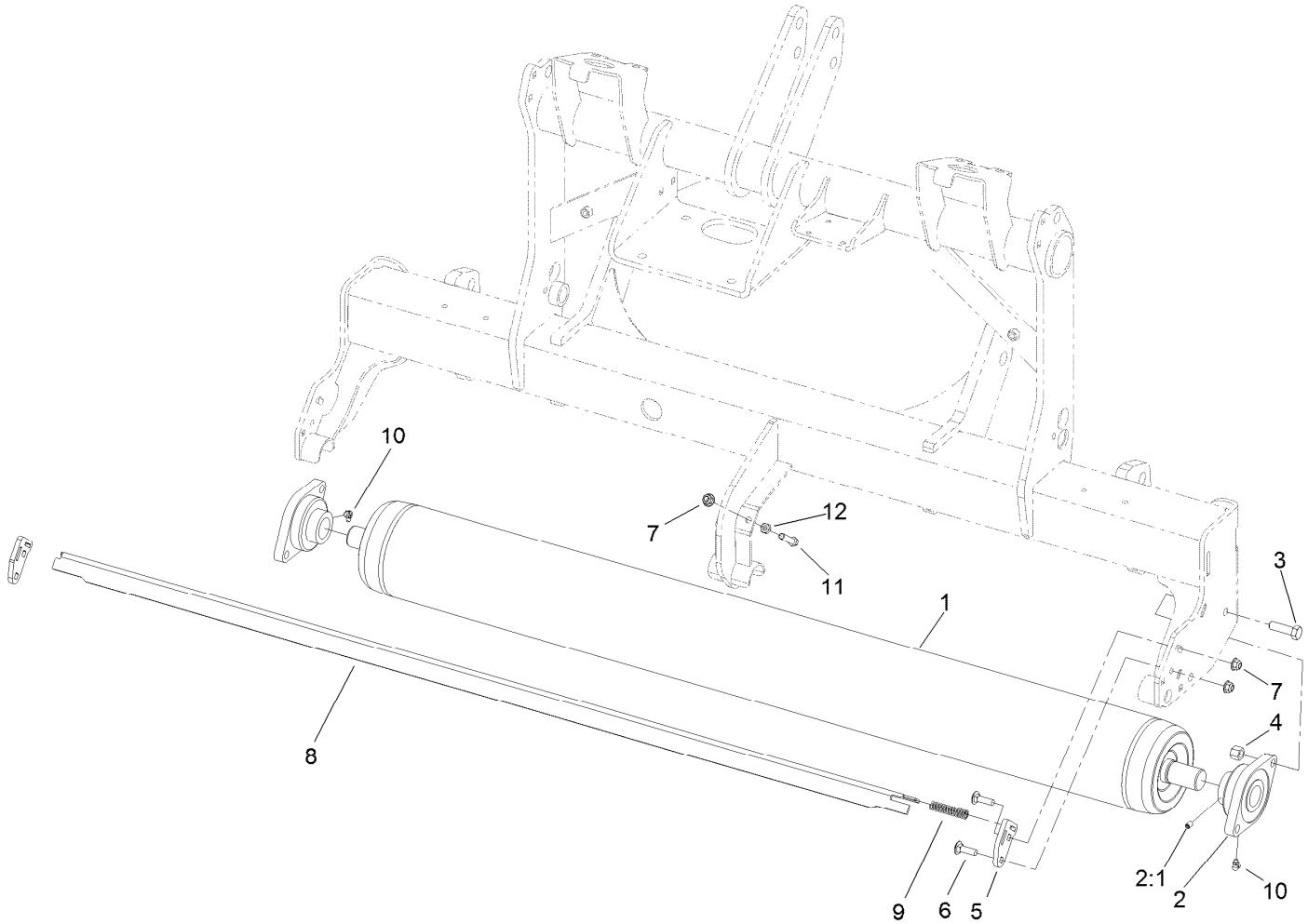

Roller and Scraper Assembly

Ref.	*Part Number*	*Qty.*	*Description*
1	110-4252-03	1	Roller
2	105-0962	2	Bearing-Mount, Flange
2:1	3246-17	1	Setscrew-HSH
3	325-7	4	Screw-HH
4	3296-23	4	Nut-Lock, NI
5	110-4290	2	Arm-Scraper
6	3231-25	4	Bolt-CARR
7	104-8301	5	Nut-HF, NI
8	110-4288-03	1	Scraper-Roller
9	108-4469	1	Spring-Compression
10	302-40	2	Fitting-Grease, 90 DEG
11	323-53	1	Screw-HH
12	3217-7	1	Nut-Hex

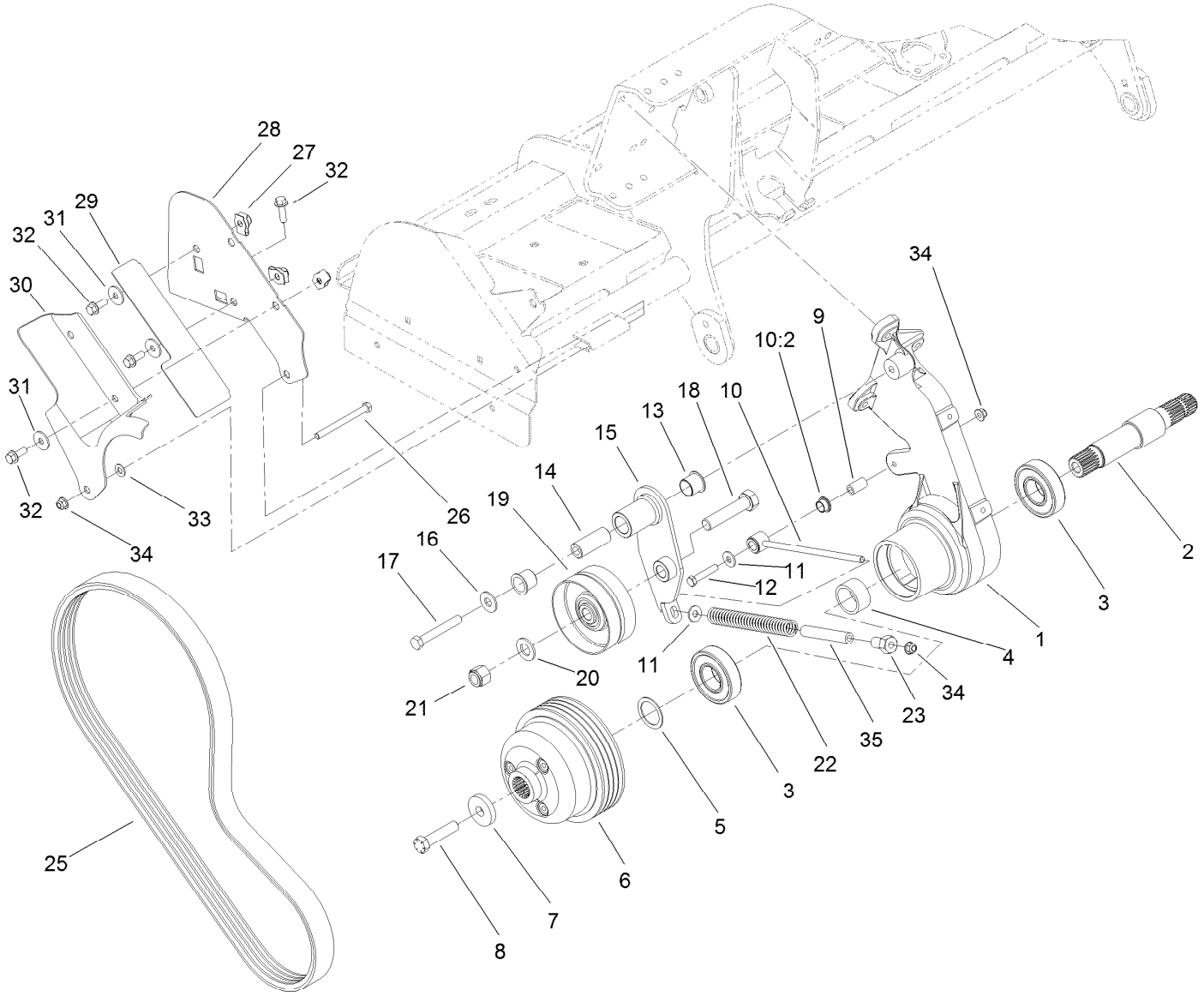

Right Hand Belt Drive Assembly

Ref.	Part Number	Qty.	Description
1	110-4445	1	Support-Pulley, RH
2	110-4527	1	Shaft-Pulley, Splined
3	106-8871	2	Bearing-Ball
4	110-4460	1	Spacer-Bearing
5	110-4498	1	Washer-Shim
6	110-4419	1	Pulley
7	105-1016	1	Washer-Hardened
8	110-4614	1	Screw-HH
9	110-4631	1	Tube-Spacer
10	115-2815	1	Idler Arm ASM
10:2	80-1290	2	Bushing
11	80-6990	2	Washer-Hardened
12	323-11	1	Screw-HH
13	126-1963	2	Bushing-Pivot
14	105-0945	1	Sleeve-Pivot
15	110-4624-03	1	Arm-Idler, RH
16	3256-6	1	Washer-Flat
17	325-14	1	Screw-HH

Ref.	Part Number	Qty.	Description
18	328-5	1	Screw-HH
19	100-7631	1	Pulley-Idler
20	3256-28	1	Washer-Flat
21	3296-51	1	Nut-Lock, NI
22	110-4632	1	Spring-Compression
23	110-4676	1	Nut-Idler
25	110-4327	1	Belt-Banded, 4 Groove
26	323-17	1	Screw-HH
27	105-4886	4	Nut-Tinnerman
28	110-4476-03	1	Support-Guard, Belt
29	114-1463-03	1	Shield-Dirt, RH
30	110-4474	1	Guard-Belt, RH
31	93-8806	4	Washer-Hardened
32	3234-24	6	Screw-HHF
33	3256-24	1	Washer-Flat
34	104-8301	3	Nut-HF, NI
35	115-2800	1	Hose

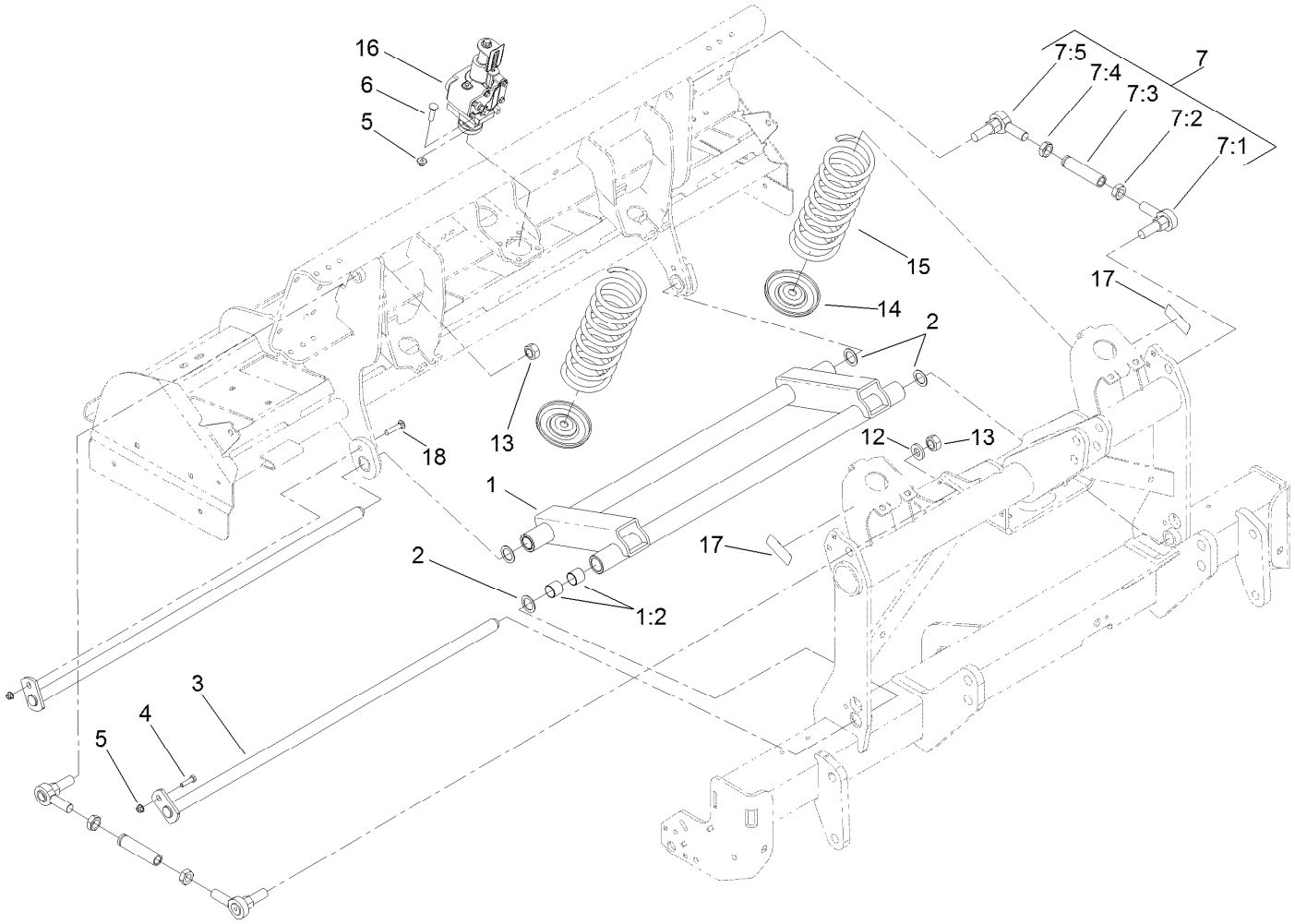

H-Frame Assembly

Ref.	Part Number	Qty.	Description
1	110-4617	1	H-Frame ASM
1:2	110-4612	8	Bushing-Straight
2	10-8110	4	Washer-Thrust
3	110-4249	2	Shaft
4	323-7	1	Screw-HH
5	104-8301	6	Nut-HF, NI
6	3231-4	4	Screw-CARR
7	115-2821	2	Link ASM
7:1	105-1025	1	End-Rod
7:2	3220-17	1	Nut-Jam, LH

Ref.	Part Number	Qty.	Description
7:3	110-4251	1	Link-Upper
7:4	3220-7	1	Nut-Jam
7:5	2411-40	1	End-Rod
12	92-5836	2	Washer
13	3296-50	4	Nut-Lock, NI
14	110-4287-03	4	Cup-Spring
15	105-4183-01	2	Spring-Compression
16	115-2844	1	Depth Control ASM
17	93-6696	2	Decal-Warning
18	3231-5	1	Screw-CARR

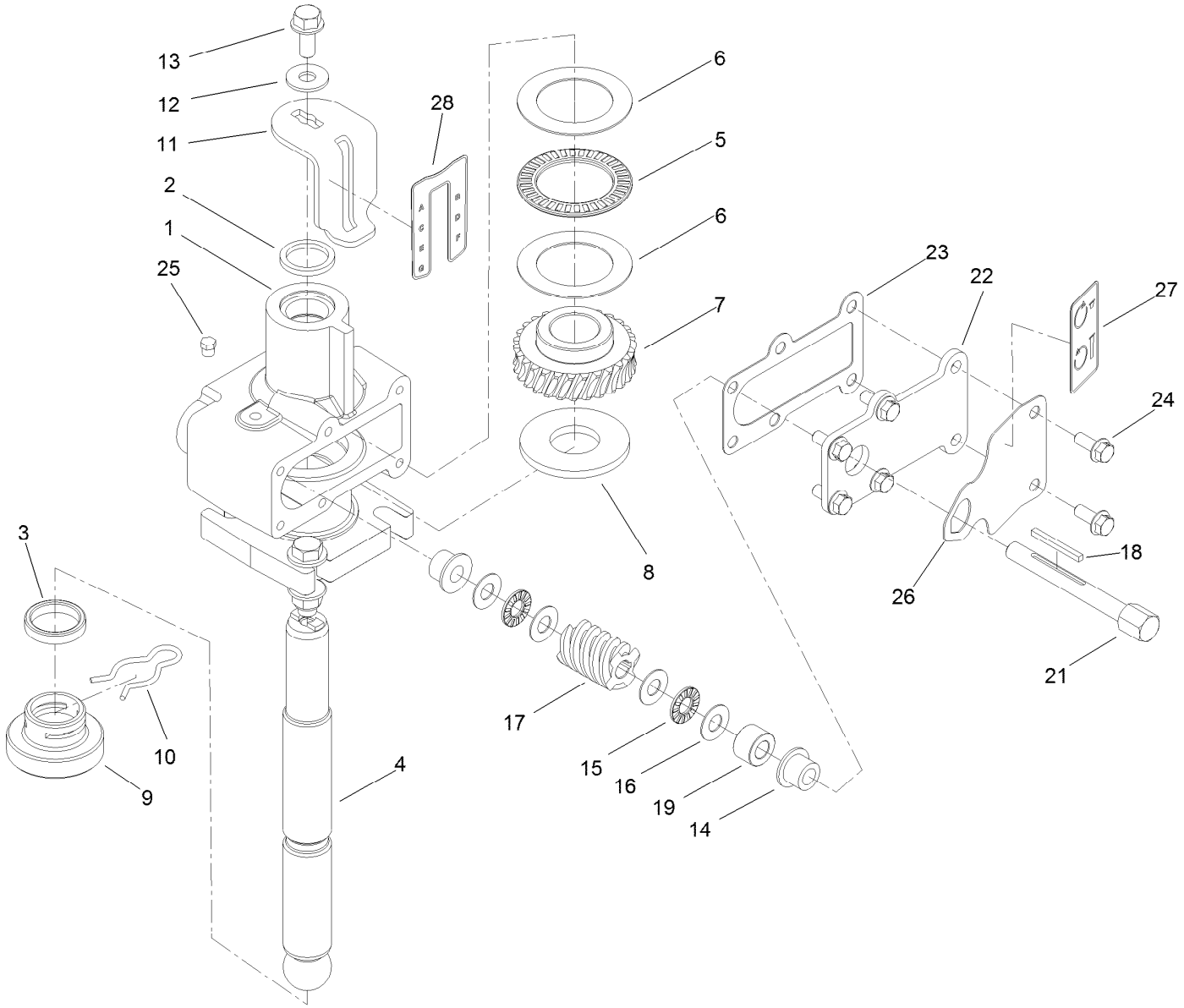

Depth Control Assembly No. 115-2844

Ref.	Part Number	Qty.	Description
1	110-4531	1	Hub-Control, Depth
2	253-59	1	Seal-Oil
3	7-0045	1	Seal-Oil
4	110-4534	1	Shaft-Control, Depth
5	110-4600	1	Bearing-Thrust
6	110-4602	2	Washer-Bearing
7	110-4582	1	Gear-Worm, Depth Control
8	112-4953	1	Washer-Plain
9	110-4438	1	Shoe-Control, Depth
10	110-4439	1	Clip-Hairpin
11	110-4533	1	Gage-Control, Depth
12	3256-71	1	Washer-Flat
13	3234-5	1	Screw-HHF
14	110-4674	2	Bushing-Flange

Ref.	Part Number	Qty.	Description
15	110-4599	2	Bearing-Thrust
16	73-0041	4	Washer-Thrust
17	110-4581	1	Worm-Control, Depth
18	110-4536	1	Key-Gear, Worm
19	110-4537	1	Spacer-Gear, Worm
21	110-4580	1	Shaft-Gear, Worm
22	110-4532-03	1	Cover-Control, Depth
23	110-4578	1	Gasket-Control, Depth
24	3234-33	6	Screw-HHF
25	302-59	1	Plug-EXT Hex Spl
26	110-4604	1	Plate-Lock, Depth
27	110-4677	1	Decal-Rotation, Depth
28	110-4678	1	Decal-Designation, Depth

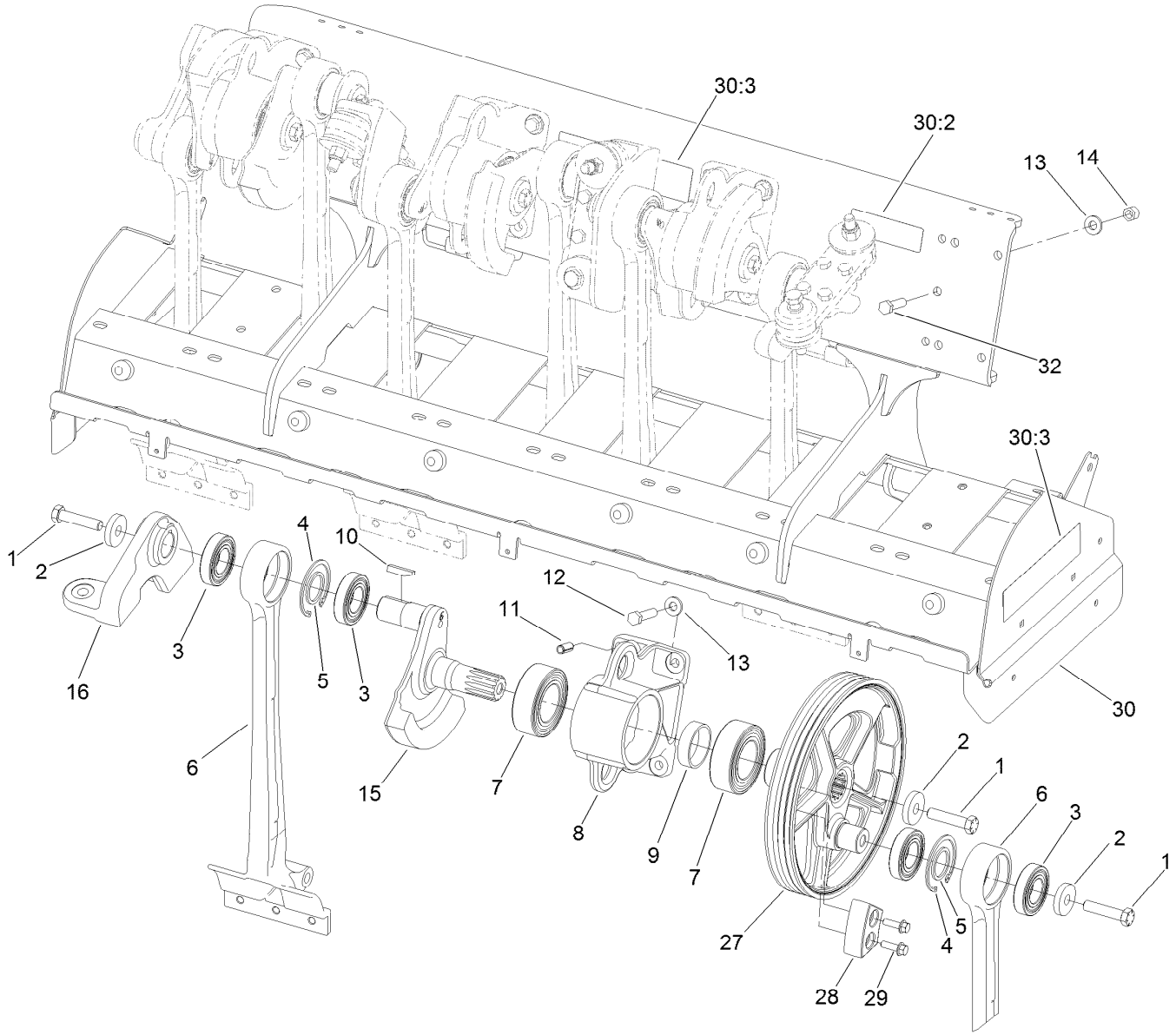

No. 1 and No. 2 Crankarm Assembly

Ref.	Part Number	Qty.	Description
1	110-4614	3	Screw-HH
2	105-1016	3	Washer-Hardened
3	110-4556	4	Bearing-Ball
4	32151-76	2	Ring-Retaining, Internal
5	110-4557	2	Spacer-Bearing
6	110-4573	2	Arm-Stomper
7	110-4555	2	Bearing-Ball, 2 Row
8	110-4566	1	Housing-Bearing
9	110-4584	1	Spacer-Bearing
10	110-4546	1	Key-Square
11	105-1041	2	Pin-Spring
12	325-9	4	Screw-HH

Ref.	Part Number	Qty.	Description
13	107-3395	7	Washer-Hardened
14	3296-23	2	Nut-Lock, NI
15	110-4571	1	Crankarm-No. 2, 4, 6
16	110-4567	1	Coupling-No. 2
27	114-1458	1	Pulley-Crankshaft
28	114-1456-03	1	Weight-Counter, Pulley
29	3234-24	2	Screw-HHF
30	110-4684	1	Coring Head Frame ASM
30:2	110-4664	1	Decal-Torque, Bolt
30:3	110-4670	3	Decal-Warning, CE
32	325-8	1	Screw-HH

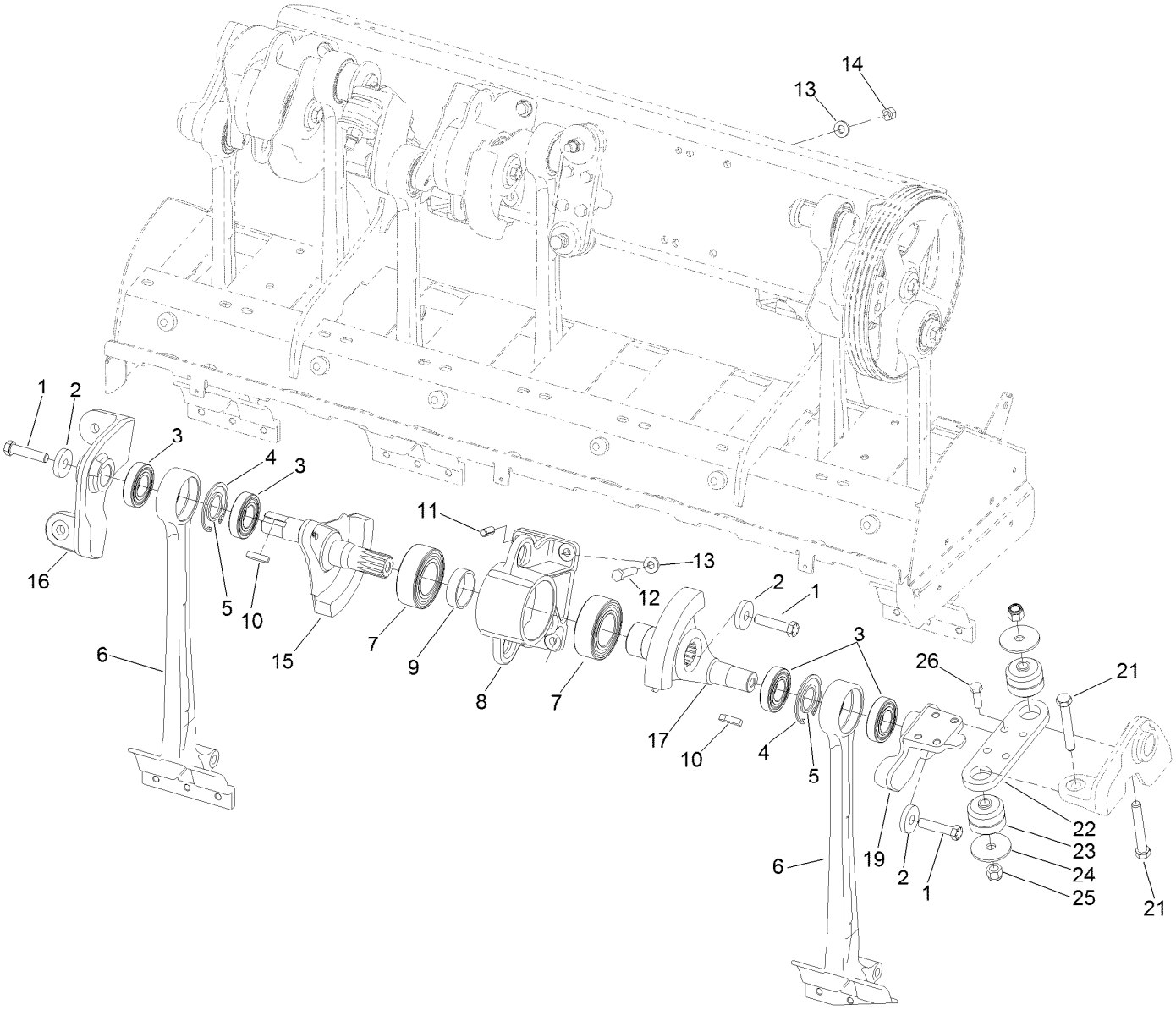

No. 3 and No. 4 Crankarm Assembly

Ref.	Part Number	Qty.	Description
1	110-4614	3	Screw-HH
2	105-1016	3	Washer-Hardened
3	110-4556	4	Bearing-Ball
4	32151-76	2	Ring-Retaining, Internal
5	110-4557	2	Spacer-Bearing
6	110-4573	2	Arm-Stomper
7	110-4555	2	Bearing-Ball, 2 Row
8	110-4566	1	Housing-Bearing
9	110-4584	1	Spacer-Bearing
10	110-4546	2	Key-Square
11	105-1041	2	Pin-Spring
12	325-9	4	Screw-HH

Ref.	Part Number	Qty.	Description
13	107-3395	8	Washer-Hardened
14	3296-23	4	Nut-Lock, NI
15	110-4571	1	Crankarm-No. 2, 4, 6
16	110-4567	1	Coupling-No. 2
17	110-4572	1	Crankarm-No. 3, 5, 7
19	110-4568	1	Coupling-No. 3
21	327-29	2	Screw-HH
22	105-0974-03	1	Plate-Coupling
23	105-0963	2	Mount-ISO, Crank
24	110-4549	2	Washer-Snubbing
25	3296-53	2	Nut-Lock, NI
26	325-6	4	Screw-HH

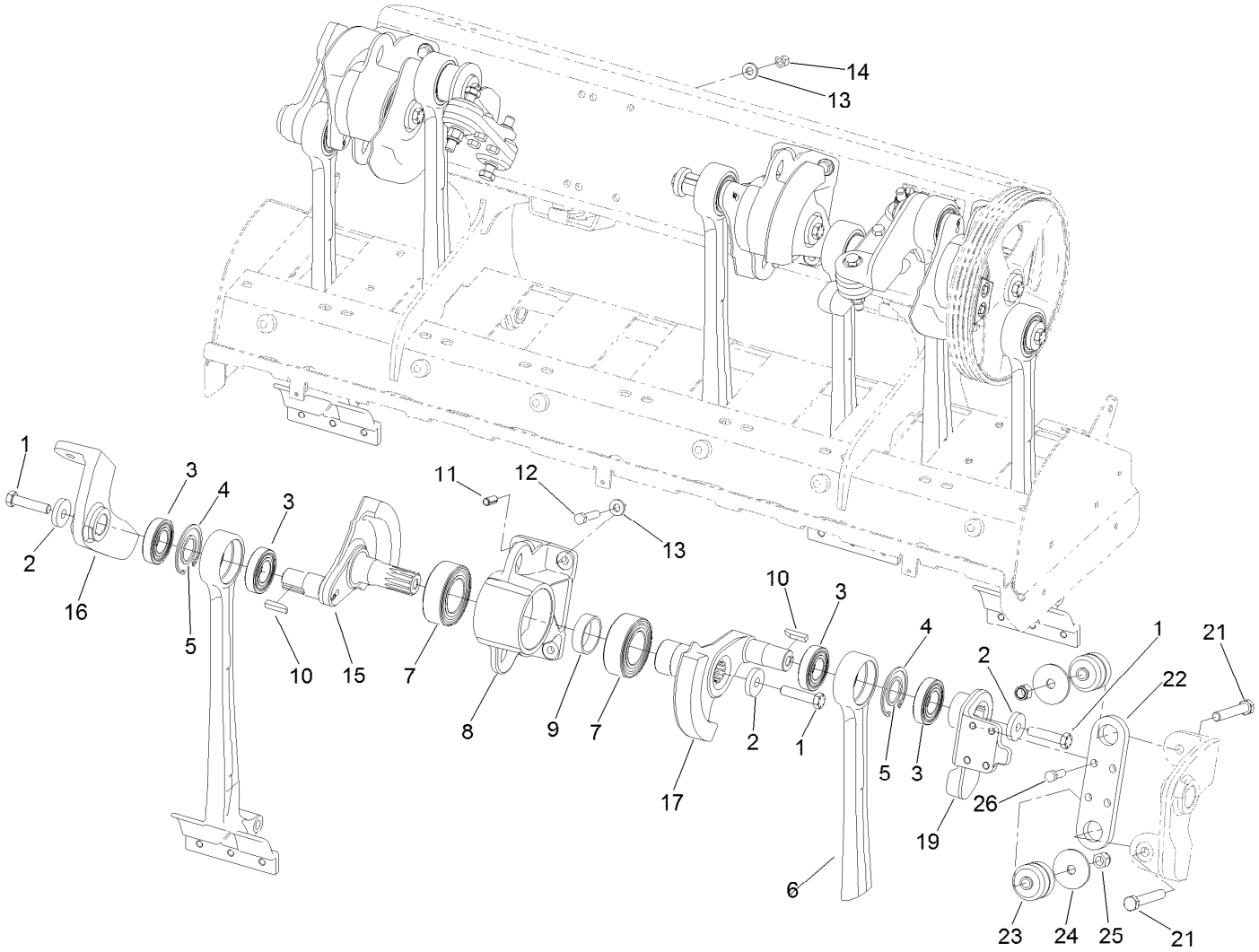

No. 5 and No. 6 Crankarm Assembly

Ref.	Part Number	Qty.	Description
1	110-4614	3	Screw-HH
2	105-1016	3	Washer-Hardened
3	110-4556	4	Bearing-Ball
4	32151-76	2	Ring-Retaining, Internal
5	110-4557	2	Spacer-Bearing
6	110-4573	2	Arm-Stomper
7	110-4555	2	Bearing-Ball, 2 Row
8	110-4566	1	Housing-Bearing
9	110-4584	1	Spacer-Bearing
10	110-4546	2	Key-Square
11	105-1041	2	Pin-Spring
12	325-9	4	Screw-HH

Ref.	Part Number	Qty.	Description
13	107-3395	8	Washer-Hardened
14	3296-23	4	Nut-Lock, NI
15	110-4571	1	Crankarm-No. 2, 4, 6
16	110-4567	1	Coupling-No. 2
17	110-4572	1	Crankarm-No. 3, 5, 7
19	110-4568	1	Coupling-No. 3
21	327-29	2	Screw-HH
22	105-0974-03	1	Plate-Coupling
23	105-0963	2	Mount-ISO, Crank
24	110-4549	2	Washer-Snubbing
25	3296-53	2	Nut-Lock, NI
26	325-6	4	Screw-HH

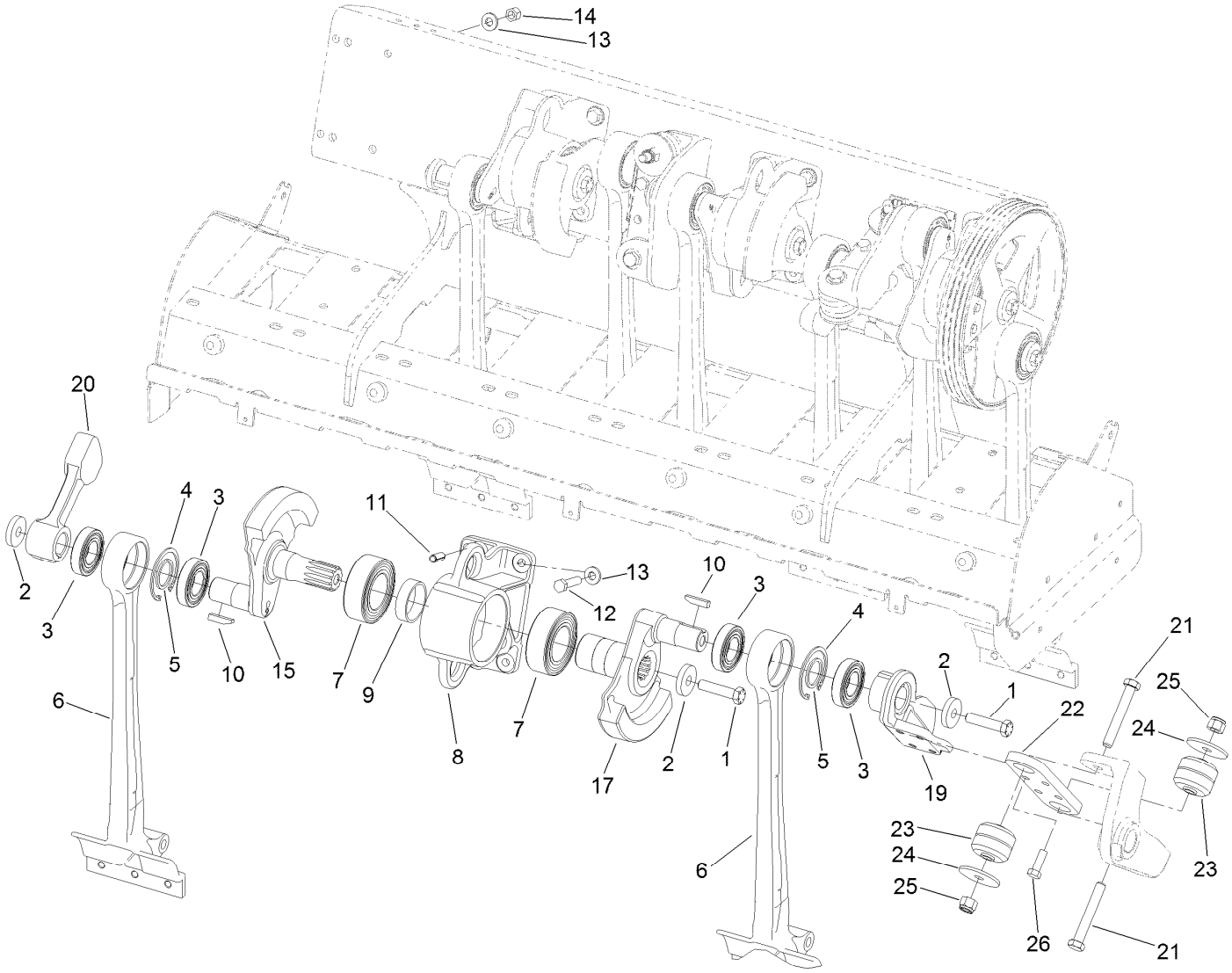

No. 7 and No. 8 Crankarm Assembly

Ref.	Part Number	Qty.	Description
1	110-4614	3	Screw-HH
2	105-1016	3	Washer-Hardened
3	110-4556	4	Bearing-Ball
4	32151-76	2	Ring-Retaining, Internal
5	110-4557	2	Spacer-Bearing
6	110-4573	2	Arm-Stomper
7	110-4555	2	Bearing-Ball, 2 Row
8	110-4566	1	Housing-Bearing
9	110-4584	1	Spacer-Bearing
10	110-4546	2	Key-Square
11	105-1041	2	Pin-Spring
12	325-9	4	Screw-HH

Ref.	Part Number	Qty.	Description
13	107-3395	8	Washer-Hardened
14	3296-23	4	Nut-Lock, NI
15	110-4571	1	Crankarm-No. 2, 4, 6
17	110-4572	1	Crankarm-No. 3, 5, 7
19	110-4568	1	Coupling-No. 3
20	114-1460	1	Weight-Counter, No. 8
21	327-29	2	Screw-HH
22	105-0974-03	1	Plate-Coupling
23	105-0963	2	Mount-ISO, Crank
24	110-4549	2	Washer-Snubbing
25	3296-53	2	Nut-Lock, NI
26	325-6	4	Screw-HH

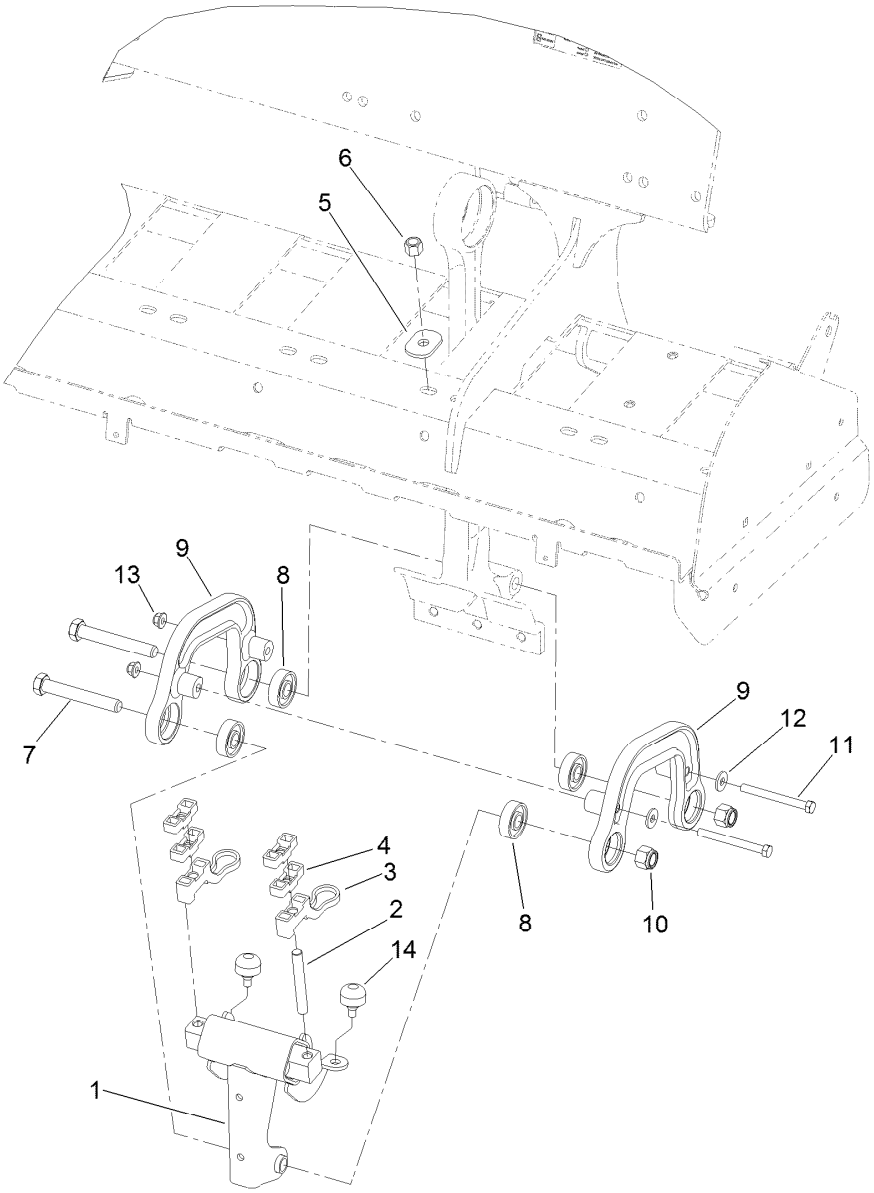

Roto-Link Damper Assembly

Ref.	Part Number	Qty.	Description
1	106-8922	8	Damper
2	110-4504	16	Stud
3	110-4506	16	Bumper-Rotolink
4	110-4507	32	Standoff-Rotolink
5	107-7543	16	Washer-Hardened
6	32128-23	16	Nut-HF
7	327-29	16	Screw-HH
8	251-311	32	Bearing-Ball
9	105-1000	16	Link-Damper
10	3296-53	16	Nut-Lock, NI
11	323-42	16	Screw-HH
12	80-6990	16	Washer-Hardened
13	104-8301	16	Nut-HF, NI
14	87-2440	16	Bumper-Rubber

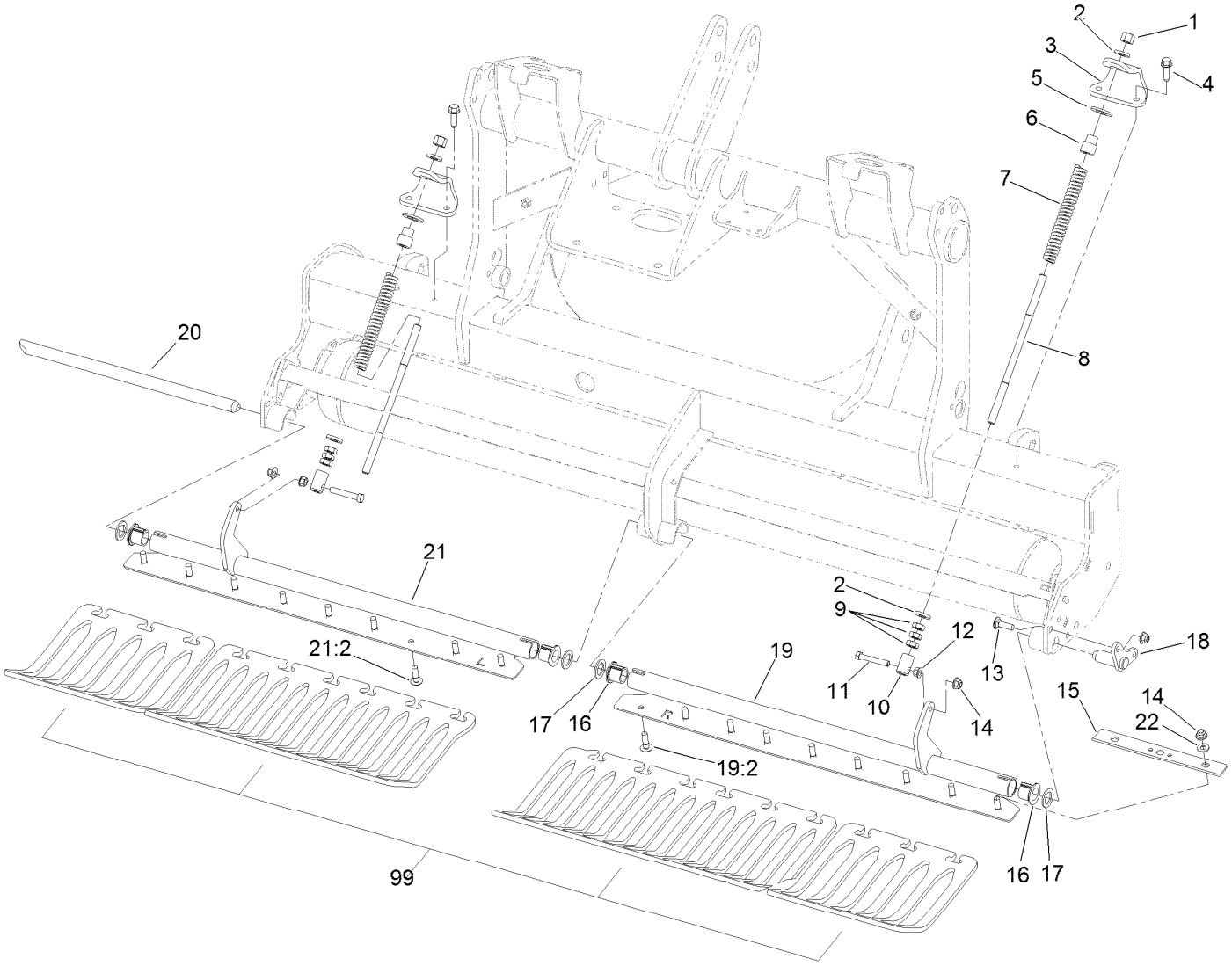

Turf Guard Assembly

Ref.	Part Number	Qty.	Description
1	3296-23	2	Nut-Lock, NI
2	107-3395	4	Washer-Hardened
3	110-4267-03	2	Bracket-Spring
4	32144-109	4	Screw-Thd
5	3256-28	2	Washer-Flat
6	110-4416	2	Sleeve-Rod, Spring
7	110-4417	2	Spring-Compression
8	110-4421	2	Rod-Spring
9	3218-5	6	Nut-Jam
10	99-8662	2	Tube-Spring
11	323-45	2	Screw-HH
12	32128-40	4	Nut-Flange
13	3231-25	4	Bolt-CARR
14	104-8301	22	Nut-HF, NI
15	110-4274-03	6	Clamp-Guard, Turf
16	107-7581	4	Bushing-Flange, Keyed
17	3-7898	4	Washer-Thrust

Ref.	Part Number	Qty.	Description
18	110-4296	1	Shaft-Stub
19	110-4620	1	RH Turfguard ASM
19:2	125-3318	9	Screw-Neck, Rib
20	110-4297	1	Shaft
21	110-4619	1	LH Turfguard ASM
21:2	125-3318	9	Screw-Neck, Rib
22	3256-24	18	Washer-Flat
99	120-1044	2	Guard-Turf, 3-Tine (Short) ■
99	120-1045	2	Guard-Turf, 4-Tine (Short) ● ■
99	120-1057	1	Guard-Turf, 3-Tine (RH) ■
99	120-1058	1	Guard-Turf, 3-Tine (LH) ■
99	120-1059	1	Guard-Turf, 4-Tine (RH) ● ■
99	120-1060	1	Guard-Turf, 4-Tine (LH) ● ■
99	120-1061	1	Guard-Turf, 5 Tine (RH) ● ■
99	120-1062	1	Guard-Turf, 5 Tine (LH) ● ■

● Not illustrated

■ Optional Equipment

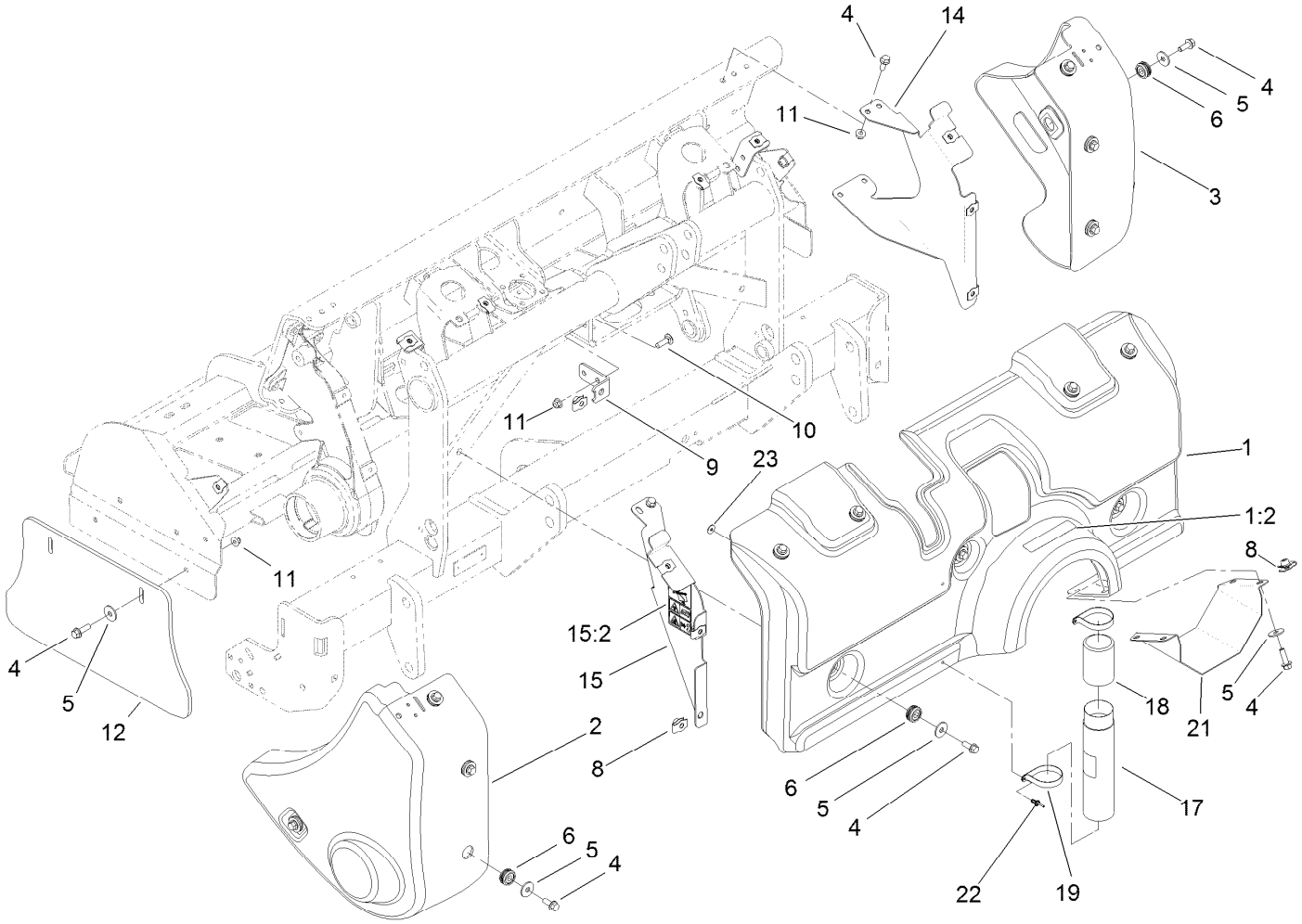

Front Cover Assembly

Ref.	Part Number	Qty.	Description
1	110-4682	1	Front Cover ASM
1:2	110-4668	1	Decal-Warning, PTO
2	110-4466	1	Shield-Pulley, RH
3	110-4467	1	Shield-Pulley, LH
4	3234-24	31	Screw-HHF
5	93-8806	23	Washer-Hardened
6	110-4697	15	Mount-Isolated
8	105-4886	17	Nut-Tinnerman
9	110-4478	3	Support-Cover, Front
10	3231-25	6	Bolt-CARR
11	104-8301	16	Nut-HF, NI

Ref.	Part Number	Qty.	Description
12	105-1069	2	Shield-Side
14	110-4503-03	1	Support-Shield, LH
15	110-4680	1	RH Shield Support ASM
15:2	110-4667	1	Decal-Warning, Spring
17	104-7050	1	Tube-Manual
18	104-7048	1	Cap-Housing
19	2412-120	2	Clamp-R
21	110-4422-03	1	Shield-PTO
22	114439	2	Rivet-Blind
23	3256-61	2	Washer-Flat

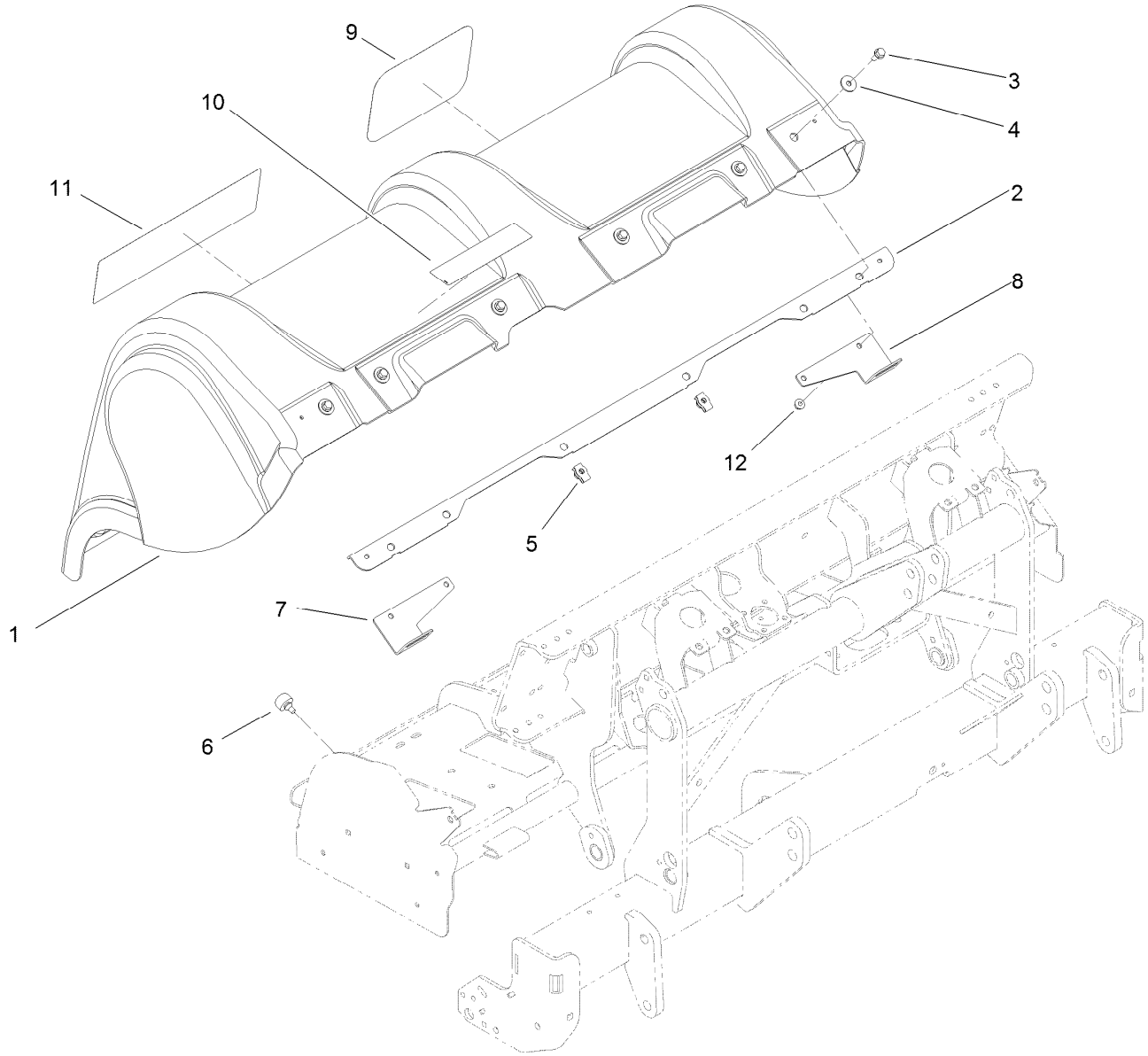

Rear Cover Assembly

Ref.	*Part Number*	*Qty.*	*Description*
1	110-4465	1	Hood-Rear
2	110-4482-03	1	Stiffener-Hood
3	3234-24	6	Screw-HHF
4	93-8806	6	Washer-Hardened
5	105-4886	2	Nut-Tinnerman
6	87-2440	6	Bumper-Rubber
7	110-4550-03	1	Stirrup-Hood, RH
8	110-4551-03	1	Stirrup-Hood, LH
9	67-7310	1	Decal
10	106-8856	1	Decal - Tine Depth, CE
11	110-4426	1	Decal-Procore
12	104-8301	4	Nut-HF, NI

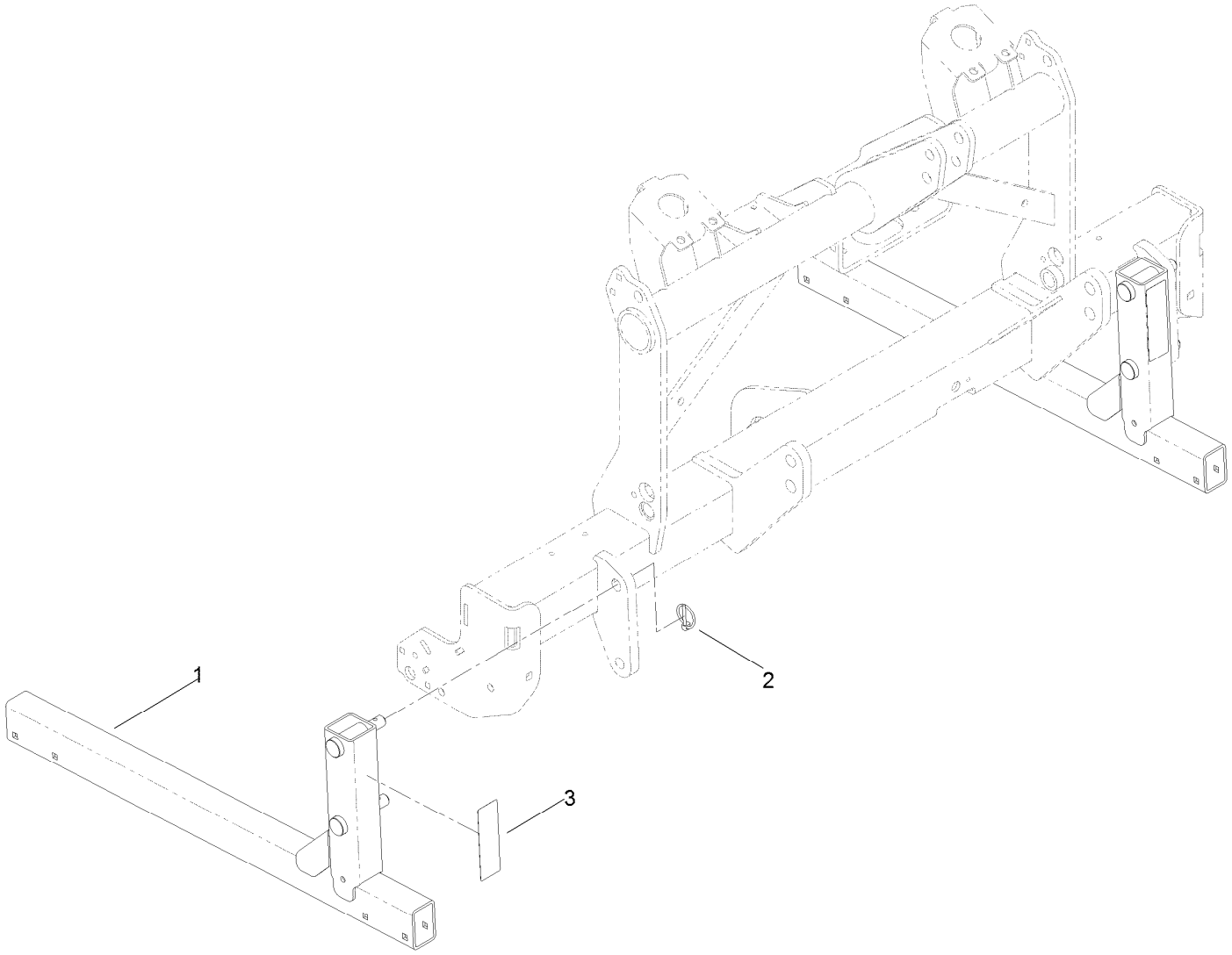

Storage Stand Assembly

Ref.	*Part Number*	*Qty.*	*Description*
1	110-4292-03	2	Stand
2	92-1298	4	Pin-Lynch
3	110-4666	2	Decal-Service, Storage

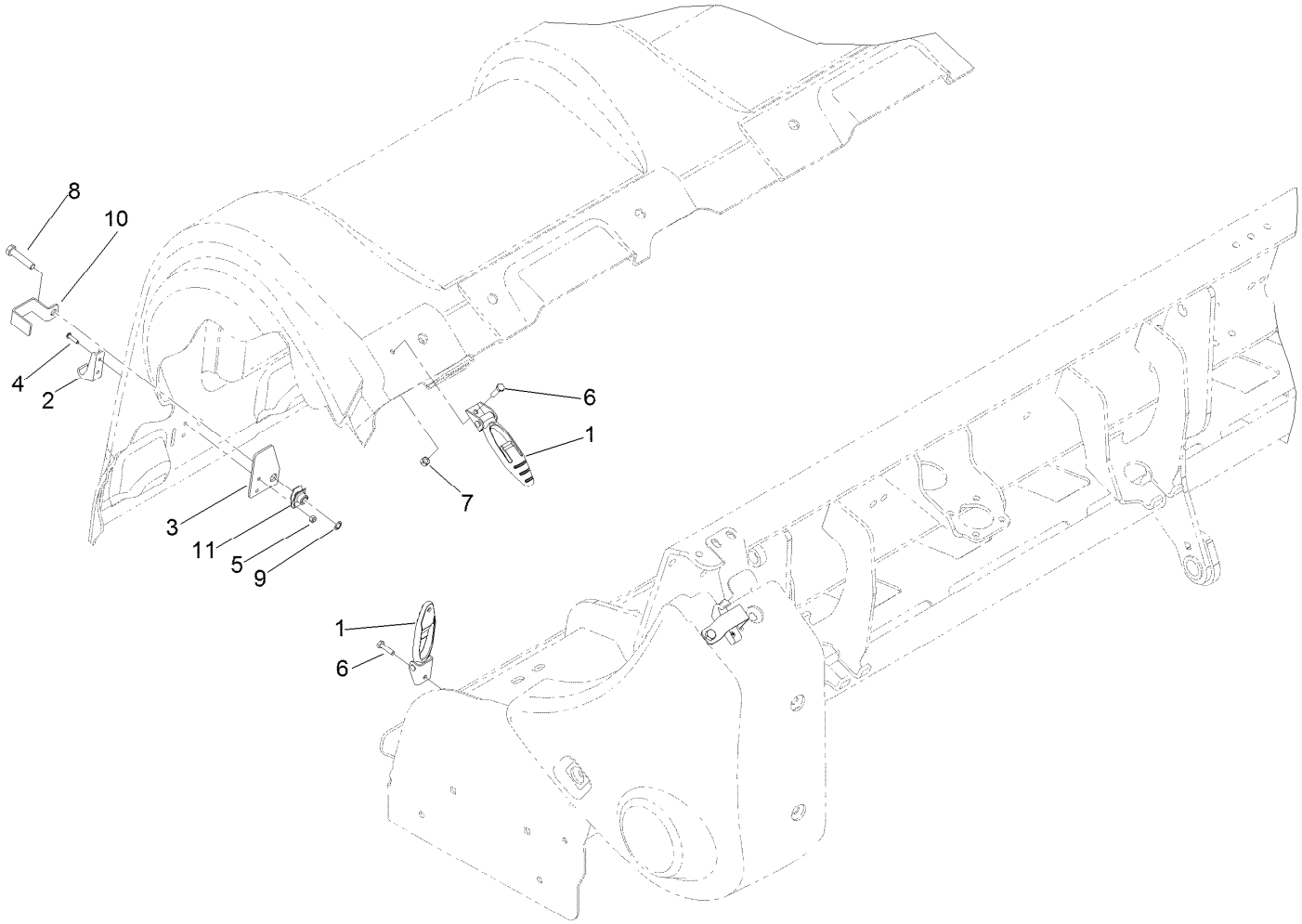

Cover Latch Assembly

Ref.	*Part Number*	*Qty.*	*Description*
1	103-2898	5	Latch-Rubber
2	103-2897	5	Latch-Catch
3	110-4672	5	Plate-Reinforcement
4	104-2408	10	Screw-HSBH
5	3296-2	10	Nut-Lock, NI
6	321-6	5	Screw-HH
7	3296-42	5	Nut-Lock, NI
8	323-53	4	Screw-HH
9	32151-72	4	Ring-Retaining
10	110-4673	4	Lock-Latch, CE
11	105-4886	4	Nut-Tinnerman

Attachments and Accessories

For 09715 ProCore 864 Aerator

Product Name	Model/Part
Windrower Kit	09220
Three-Tine Head Quick Lock	09711
Four-Tine Head Quick Lock	09719
2 x 5 Mini Tine Head	09736
1 x 6 Mini Tine Head	09737
Needle Tine Head	09739
3/4in Three-Tine Head	09794
3/4in Four-Tine Head	09796
7/8in Three-Tine Head	09797
Premium All Season Gear Lube (5 Gallon Pail)	108-1187
Premium All Purpose Grease (Tube)	108-1190
Premium All Season Gear Lube (Quart)	108-1590
Procore Ce Completion Kit	110-4693
Sleeve Tool ASM	114-0590-01
Guarded Driveshaft	115-2839
Turf Guard 3 Tine (Short)	120-1044
Turf Guard 4 Tine (Short)	120-1045
Turf Guard 5 Tine (Short)	120-1047
Turf Guard 6 Tine (Short)	120-1050
Turf Guard 3 Tine (RH)	120-1057
Turf Guard 3 Tine (LH)	120-1058
Turf Guard 4 Tine (RH)	120-1059
Turf Guard 4 Tine (LH)	120-1060
Turf Guard 5 Tine (RH)	120-1061
Turf Guard 5 Tine (LH)	120-1062
Turf Guard 6 Tine (RH)	120-1063
Turf Guard 6 Tine (LH)	120-1064

TORO®

Count on it.