Form No. 3450-972 Rev B

TORO®

Count on it.

Operator's Manual

Reelmaster® 7000-D 4-Wheel Drive Traction Unit

Model No. 03780—Serial No. 410400000 and Up

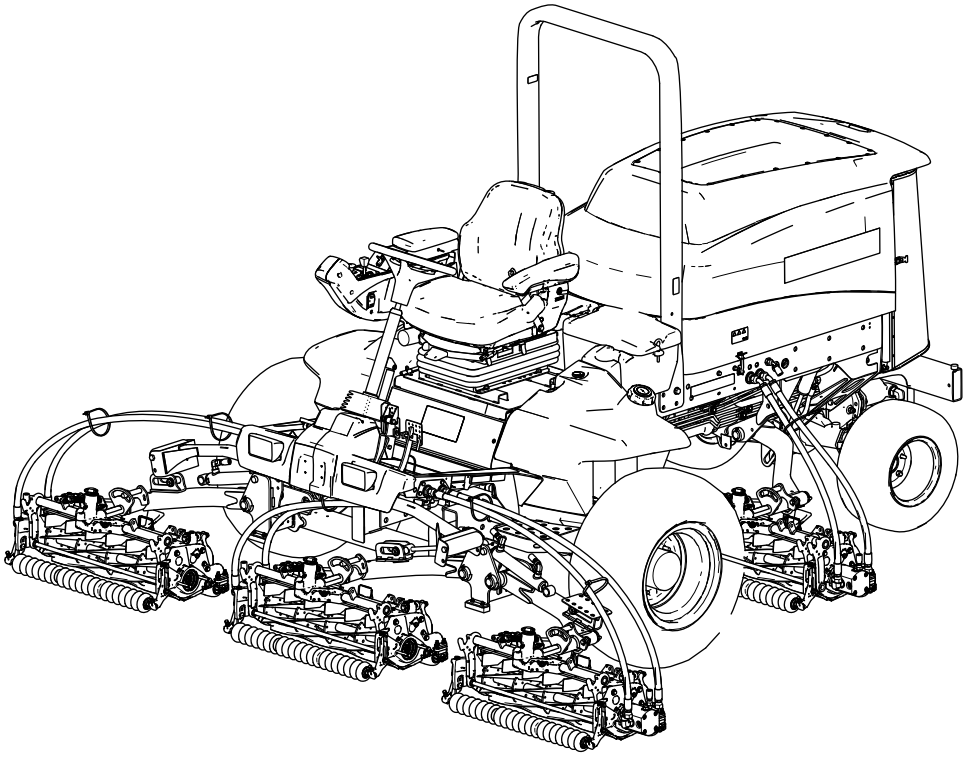

Register at www.Toro.com.
Original Instructions (EN)

CE UK CA

3450-972

This product complies with all relevant European directives. For details, please see the separate product specific Declaration of Conformity (DOC) sheet.

It is a violation of California Public Resource Code Section 4442 or 4443 to use or operate the engine on any forest-covered, brush-covered, or grass-covered land unless the engine is equipped with a spark arrester, as defined in Section 4442, maintained in effective working order or the engine is constructed, equipped, and maintained for the prevention of fire.

The enclosed engine owner's manual is supplied for information regarding the US Environmental Protection Agency (EPA) and the California Emission Control Regulation of emission systems, maintenance, and warranty. Replacements may be ordered through the engine manufacturer.

⚠ WARNING

CALIFORNIA
Proposition 65 Warning

Diesel engine exhaust and some of its constituents are known to the State of California to cause cancer, birth defects, and other reproductive harm.

Battery posts, terminals, and related accessories contain lead and lead compounds, chemicals known to the State of California to cause cancer and reproductive harm. Wash hands after handling.

Use of this product may cause exposure to chemicals known to the State of California to cause cancer, birth defects, or other reproductive harm.

Visit www.Toro.com for more information, including safety tips, training materials, accessory information, help finding a dealer, or to register your product.

Whenever you need service, genuine Toro parts, or additional information, contact an Authorized Service Dealer or Toro Customer Service and have the model and serial numbers of your product ready. Figure 1 identifies the location of the model and serial numbers on the right front frame member of the product. Write the numbers in the space provided.

Important: **With your mobile device, you can scan the QR code on the serial number plate (if equipped) to access warranty, parts, and other product information.**

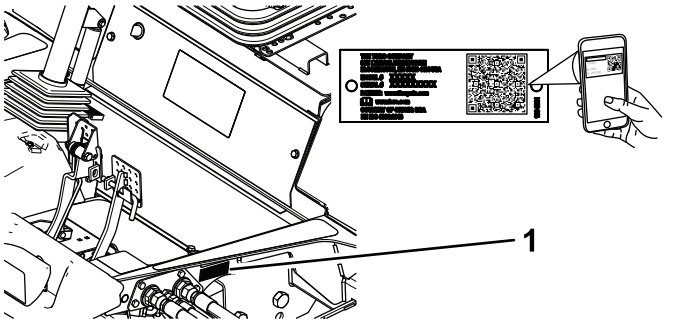

g233760

Figure 1

1. Model and serial number location

Model No. _____

Serial No. _____

Introduction

This machine is a ride-on, reel-blade lawn mower intended to be used by professional, hired operators in commercial applications. It is primarily designed for cutting grass on well-maintained turf. Using this product for purposes other than its intended use could prove dangerous to you and bystanders.

Read this information carefully to learn how to operate and maintain your product properly and to avoid injury and product damage. You are responsible for operating the product properly and safely.

© 2023—The Toro® Company
8111 Lyndale Avenue South
Bloomington, MN 55420

Contact us at www.Toro.com.
Printed in the USA
All Rights Reserved

Contents

Safety 4
General Safety 4
Safety and Instructional Decals 5
Setup 11
1 Adjusting the Front Cutting Unit Roller Position 11
2 Installing the Cutting Units 12
3 Preparing the Machine 20
4 Installing the Hood Lock for CE Compliance 20
5 Applying the CE Decals 22
Product Overview 23
Controls 23
Specifications 30
Traction Unit Specifications 30
Attachments/Accessories 30
Before Operation 30
Before Operation Safety 30
Filling the Fuel Tank 31
Performing Daily Maintenance 32
Checking the Interlock Switches 32
Adjusting the Seat 33
During Operation 33
During Operation Safety 33
Fuel Gauge 35
Using the Engine-Speed Switch 35
Starting the Engine 35
Shutting Off the Engine 35
Locking the Cutting-Unit Pivot 36
Cutting Grass with the Machine 36
Driving the Machine in Transport Mode 37
Adjusting the Turf-Compensation Spring 37
Adjusting the Cutting-Unit Counterbalance 38
Adjusting the Cutting Unit-Turnaround Height 39
Folding the Roll Bar 39
Raising the Rollbar 40
Diesel Particulate Filter Regeneration 40
Operating Tips 53
After Operation 53
After Operation Safety 53
Hauling the Machine 53
Identifying the Tie-Down Points 53
Pushing or Towing the Machine 53
Maintenance 56
Maintenance Safety 56
Recommended Maintenance Schedule(s) 56
Daily Maintenance Checklist 58
Pre-Maintenance Procedures 59
Preparing for Maintenance 59
Opening the Hood 59
Closing the Hood 60
Accessing the Battery Compartment 60
Tilting the Seat 60
Lowering the Seat 61
Locating the Jacking Points 61
Lubrication 62
Greasing the Bearings and Bushings 62
Engine Maintenance 63
Engine Safety 63
Checking the Air Filter 63
Changing the Air Filter 64
Oil Specification 65
Checking the Engine-Oil Level 65
Crankcase Oil Capacity 66
Changing the Engine Oil and Filter 66
Servicing the Diesel-Oxidation Catalyst (DOC) and the Soot Filter 67
Fuel System Maintenance 68
Draining the Fuel-Water Separator 68
Checking the Fuel Lines and Connections 68
Changing the Fuel-Water Separator Filter 69
Changing the Engine-Fuel Filter 69
Draining and Cleaning the Fuel Tank 70
Cleaning the Fuel-Intake Screen 70
Electrical System Maintenance 71
Electrical System Safety 71
Disconnecting the Battery 71
Connecting the Battery 71
Charging the Battery 71
Servicing the Battery 72
Replacing a Fuse 72
Drive System Maintenance 73
Checking the Tire Air Pressure 73
Checking the Torque of the Wheel Nuts 73
Checking for End-Play in the Planetary Drives 73
Checking the Planetary Gear-Drive Lubricant 74
Changing the Planetary-Gear-Drive Oil 74
Checking the Oil Level of the Rear Axle 75
Changing the Oil in the Rear Axle 76
Checking the Lubricant in the Reduction-Gear Case 76
Mow Speed-Spacer Table 77
Adjusting Maximum Mow-Ground Speed 77
Adjusting the Traction Drive for Neutral 79
Checking the Rear-Wheel Alignment 79
Adjusting the Rear-Wheel Toe-In 80
Cooling System Maintenance 81
Cooling System Safety 81
Coolant Specification 81
Checking the Coolant Level 81
Servicing the Engine Cooling System 82
Brake Maintenance 83
Adjusting the Service Brakes 83

Belt Maintenance 84
Servicing the Alternator Belt 84
Hydraulic System Maintenance 85
Hydraulic System Safety 85
Checking the Hydraulic Lines and Hoses 85
Hydraulic Fluid Specifications 85
Checking the Hydraulic-Fluid Level 85
Replacing the Hydraulic Filters 86
Hydraulic Fluid Capacity 87
Changing the Hydraulic Fluid 87
Cutting Unit Maintenance 88
Blade Safety 88
Backlapping the Cutting Units 88
Extended Maintenance 90
Chassis and Engine 90
Cleaning 91
Washing the Machine 91
Storage 91
Storage Safety 91
Preparing the Traction Unit 91
Preparing the Engine 92
Storing the Battery 92

Safety

General Safety

This product is capable of amputating hands and feet and of throwing objects.

- Read and understand the contents of this *Operator's Manual* before starting the engine.
- Use your full attention while operating the machine. Do not engage in any activity that causes distractions; otherwise, injury or property damage may occur.
- Do not put your hands or feet near moving components of the machine.
- Do not operate the machine without all guards and other safety protective devices in place and functioning properly on the machine.
- Keep bystanders and children out of the operating area. Never allow children to operate the machine.
- Shut off the engine, remove the key, and wait for all movement to stop before you leave the operator's position. Allow the machine to cool before adjusting, servicing, cleaning, or storing it.

Safety-Alert Symbol

The safety-alert symbol (Figure 2) shown in this manual and on the machine identifies important safety messages that you must follow to prevent accidents.



g000502

Figure 2
Safety-alert symbol

The safety-alert symbol appears above information that alerts you to unsafe actions or situations and is followed by the word **DANGER**, **WARNING**, or **CAUTION**.

DANGER indicates an imminently hazardous situation which, if not avoided, **will** result in death or serious injury.

WARNING indicates a potentially hazardous situation which, if not avoided, **could** result in death or serious injury.

CAUTION indicates a potentially hazardous situation which, if not avoided, **may** result in minor or moderate injury.

This manual uses two other words to highlight information. **Important** calls attention to special mechanical information and **Note** emphasizes general information worthy of special attention.

Safety and Instructional Decals

Safety decals and instructions are easily visible to the operator and are located near any area of potential danger. Replace any decal that is damaged or missing.



decalbatterysymbols

Battery Symbols

Some or all of these symbols are on your battery.

1. Explosion hazard
2. No fire, open flame, or smoking
3. Caustic liquid/chemical burn hazard
4. Wear eye protection.
5. Read the *Operator's Manual*.
6. Keep bystanders away from the battery.
7. Wear eye protection; explosive gases can cause blindness and other injuries.
8. Battery acid can cause blindness or severe burns.
9. Flush eyes immediately with water and get medical help fast.
10. Contains lead; do not discard

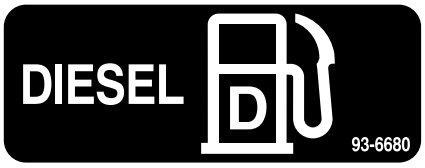

decal93-6680

93-6680

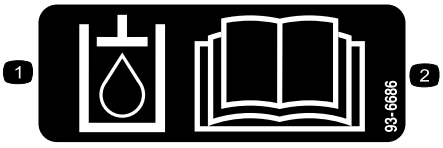

decal93-6686

93-6686

1. Hydraulic fluid
2. Read the *Operator's Manual*.



decal98-4387

98-4387

1. Warning—wear hearing protection.

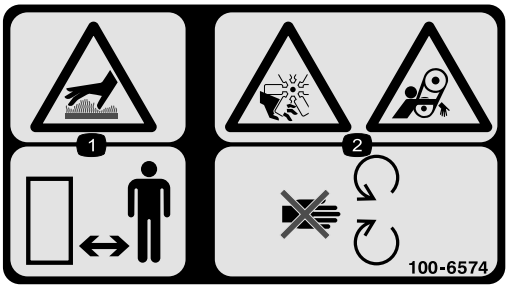

decal100-6574

100-6574

1. Hot surface hazard—keep bystanders away.
2. Severing hazard of hand, impeller; entanglement hazard, belt—keep away from moving parts.

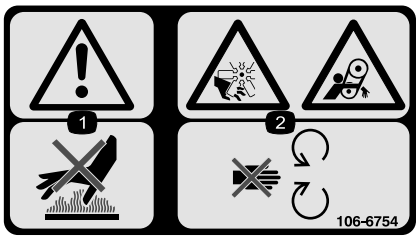

decal106-6754

106-6754

1. Warning—do not touch the hot surface.
2. Cutting/dismemberment hazard, fan; entanglement hazard, belt—stay away from moving parts.



decal106-6755

106-6755

1. Engine coolant under pressure.
2. Explosion hazard—read the *Operator's Manual.*
3. Warning—do not touch the hot surface.
4. Warning—read the *Operator's Manual.*

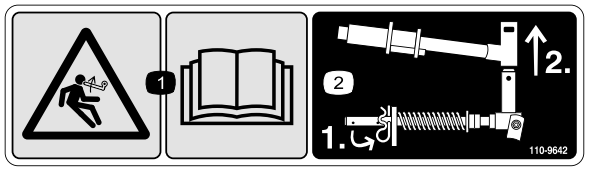

decal110-9642

110-9642

1. Stored energy hazard—read the *Operator's Manual.*
2. Move the cotter pin to the hole closest to the rod bracket and then remove the lift arm and pivot yoke.

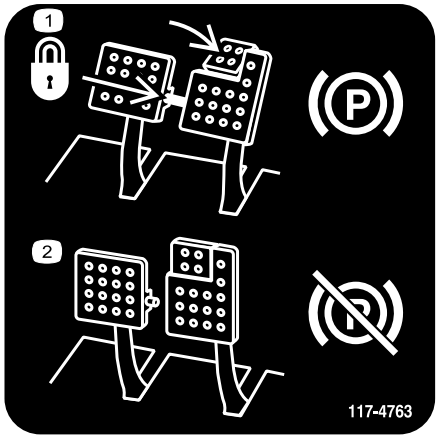

decal117-4763

117-4763

1. To engage the parking brake, secure the brake pedals with the locking pin, press the parking-brake pedals and engage the toe pedal.
2. To disengage the parking brake, disengage the locking pin and release the pedals.

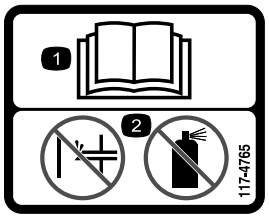

decal117-4765

117-4765

1. Read the *Operator's Manual.*
2. Do not use starting aids.

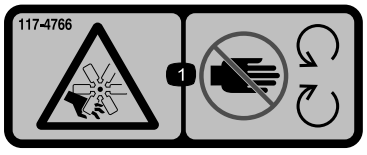

decal117-4766

117-4766

1. Cutting/dismemberment hazard; fan—stay away from moving parts, keep all guards and shields in place.

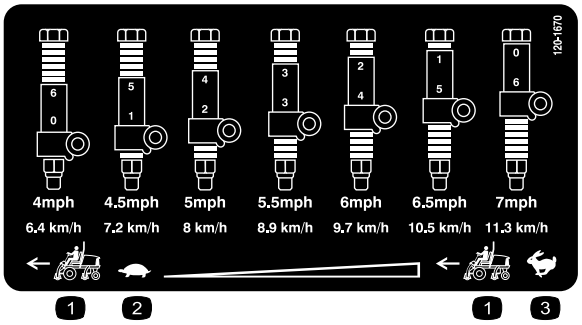

decal120-1670

120-1670

1. Traction unit speed
2. Slow
3. Fast

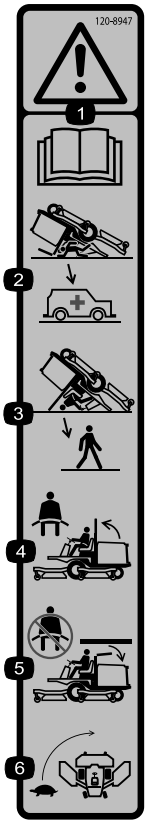

decal120-8947

120–8947

1. Warning—read the *Operator's Manual*.
2. There is no rollover protection when the roll bar is down.
3. There is rollover protection when the roll bar is up.
4. If the roll bar is raised, wear the seat belt.
5. If the roll bar is lowered, do not wear the seat belt.
6. Drive slowly when turning.

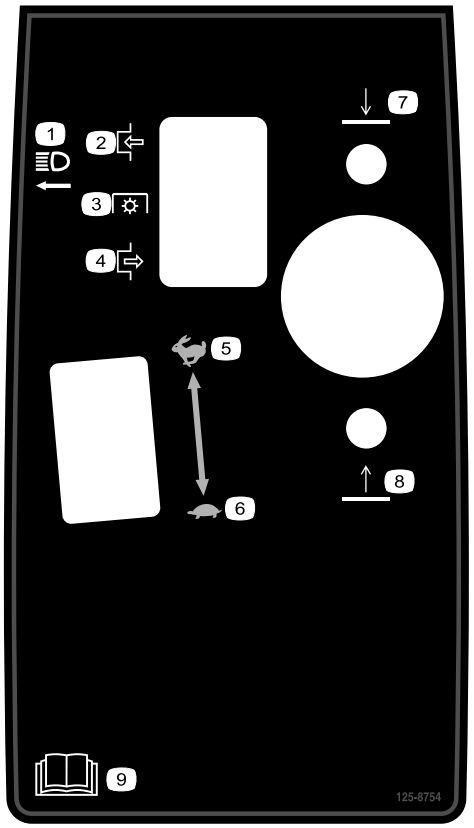

decal125-8754

125–8754

1. Headlights
2. Engage
3. Power take-off (PTO)
4. Disengage
5. Fast
6. Slow
7. Lower the cutting units
8. Raise the cutting units
9. Read the *Operator's Manual*.

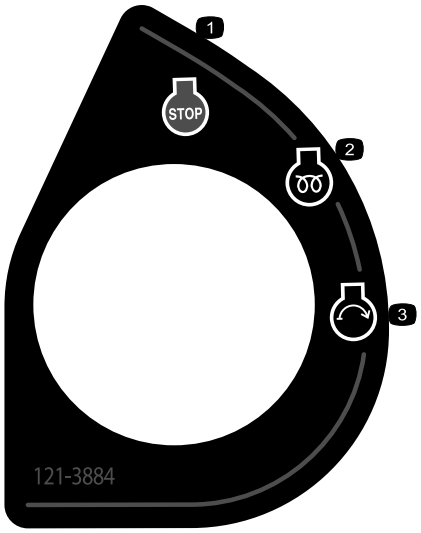

decal121-3884

121–3884

1. Engine—stop
2. Engine—preheat
3. Engine—start

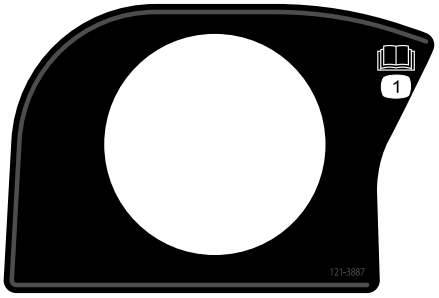

decal121-3887

121–3887

1. Read the *Operator's Manual*.



decal133-8062

133-8062

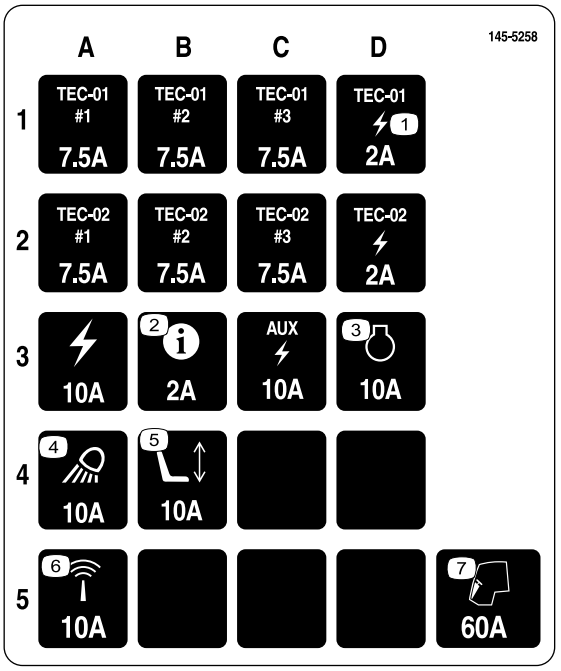

decal145-5258

145-5258

1. Power
2. Info center
3. Engine
4. Work lights
5. Power seat
6. Sensor
7. Cab

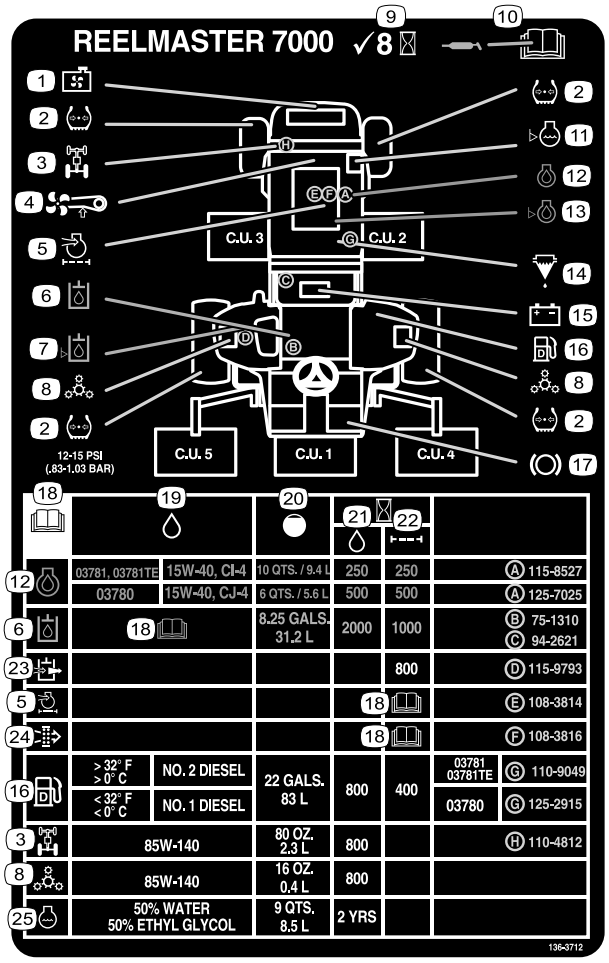

decal136-3712

136-3712

1. Radiator screen
2. Tire pressure
3. Rear axle
4. Fan belt
5. Engine air filter
6. Hydraulic fluid
7. Hydraulic-fluid level
8. Planetary drive
9. Check every 8 hours.
10. Read the *Operator's Manual* for lubrication information.
11. Engine-coolant level
12. Engine oil
13. Engine-oil level
14. Fuel/water separator
15. Battery
16. Diesel fuel
17. Brake functions
18. Read the *Operator's Manual*.
19. Fluids
20. Capacity
21. Fluid interval (hours)
22. Filter interval (hours)
23. Hydraulic breather
24. Safety air filter
25. Engine coolant

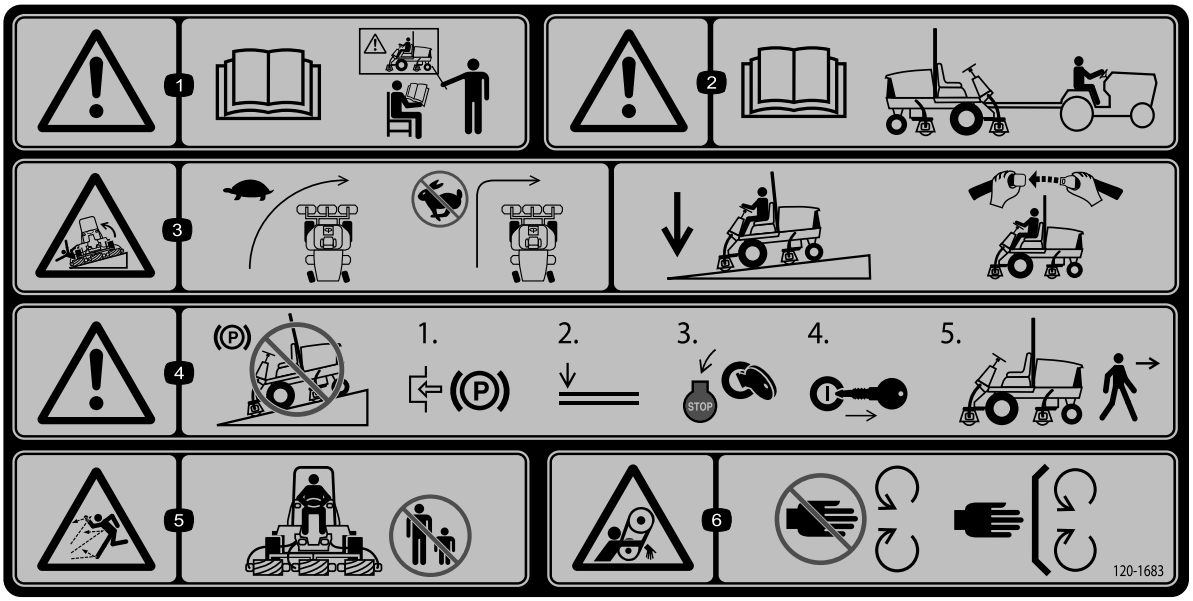

decal120-1683

120-1683

1. Warning—read the *Operator's Manual*; all operators should be trained before operating the machine.
2. Warning—read the *Operator's Manual* before towing the machine.
3. Tipping hazard—drive slowly when turning; do not turn sharply while traveling fast; lower the cutting units when driving down slopes; use a rollover protection system and wear the seatbelt.
4. Warning—do not park the machine on slopes; engage the parking brake, lower the cutting units, shut off the engine, and remove the key before leaving the machine.
5. Thrown object hazard—keep bystanders away.
6. Entanglement hazard, belt—stay away from moving parts; keep all guards and shields in place.

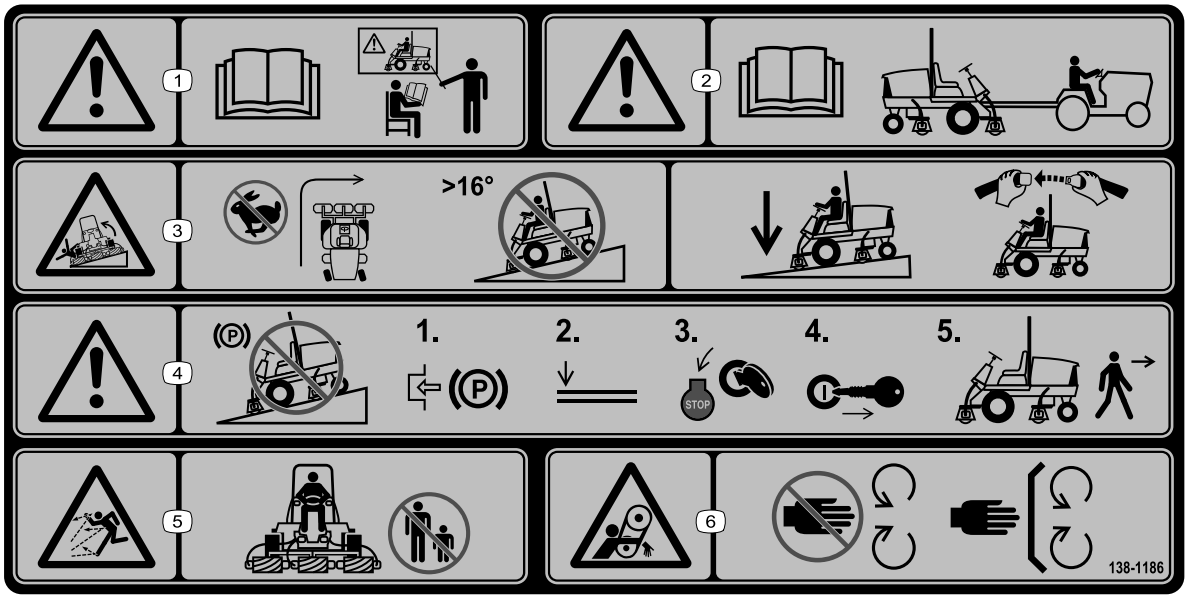

decal138-1186

138-1186

Note: This machine complies with the industry standard stability test in the static lateral and longitudinal tests with the maximum recommended slope indicated on the decal. Review the instructions for operating the machine on slopes in the *Operator's Manual* as well as the conditions in which you would operate the machine to determine whether you can operate the machine in the conditions on that day and at that site. Changes in the terrain can result in a change in slope operation for the machine. If possible, keep the cutting units lowered to the ground while operating the machine on slopes. Raising the cutting units while operating on slopes can cause the machine to become unstable.

1. Warning—read the *Operator's Manual*; all operators should be trained before operating the machine.
2. Warning—read the *Operator's Manual* before towing the machine.
3. Tipping hazard—do not turn sharply while traveling fast; do not drive up or down slopes greater than 16°; lower the cutting units when driving down slopes; use a rollover protection system and wear the seatbelt.
4. Warning—do not park the machine on slopes; engage the parking brake, lower the cutting units, shut off the engine, and remove the key before leaving the machine.
5. Thrown object hazard—keep bystanders away.
6. Entanglement hazard, belt—stay away from moving parts; keep all guards and shields in place.

Setup

Loose Parts

Use the chart below to verify that all parts have been shipped.

Procedure	Description	Qty.	Use
1	No parts required	–	Adjust the front cutting unit roller position.
2	Front hose guide (right) Front hose guide (left)	1 1	Install the cutting units.
3	No parts required	–	Prepare the machine.
4	Hood-lock bracket Rivet Screw (1/4 x 2 inch) Flat washer (1/4 inch) Locknut (1/4 inch)	1 2 1 2 1	Install the hood lock for European CE Compliance.
5	CE decal Production year decal Warning decal	1 1 1	Apply the CE decals.

Media and Additional Parts

Description	Qty.	Use
Operator's Manual	1	Read the manual before operating the machine.
Engine owner's manual	1	Read the manual before operating the engine.
Declaration of Conformity	1	This document indicates CE compliance.

Note: Determine the left and right sides of the machine from the normal operating position.

1

Adjusting the Front Cutting Unit Roller Position

No Parts Required

Procedure

Note:

1. Determine if you need to adjust the roller position. The width of the cutting unit that you install determines the roller position at the roller support as follows:
   - 27-inch cutting units—upper mounting holes of the roller support.
   - 32-inch cutting units—lower mounting holes of the roller support.

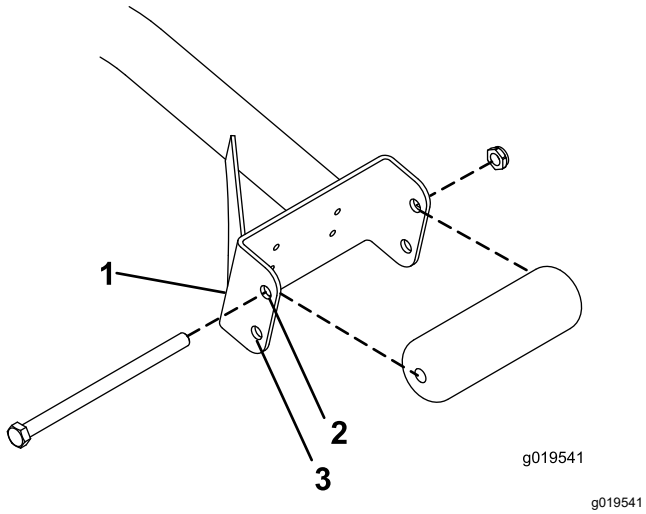

Figure 3

1. Roller support
2. Upper holes—27-inch cutting units
3. Lower holes—32-inch cutting units

2. If needed, remove the capscrew, locknut, and roller.
3. Align the roller to the other roller support holes.
4. Secure the roller to the roller support with the capscrew and locknut.
5. Repeat steps 2 through 4 at the other side of the machine.

2

Installing the Cutting Units

Parts needed for this procedure:

1	Front hose guide (right)
1	Front hose guide (left)

Preparing the Machine

1. Remove the reel motors from the shipping brackets.
2. Remove and discard the shipping brackets.

Preparing the Cutting Units

1. Remove the cutting units from the cartons.
2. Assemble and adjust as described in the cutting unit *Operator's Manual*.
3. Make sure that the counterweight (Figure 4) is installed at the proper end of the cutting unit as described in the cutting unit *Operator's Manual*.

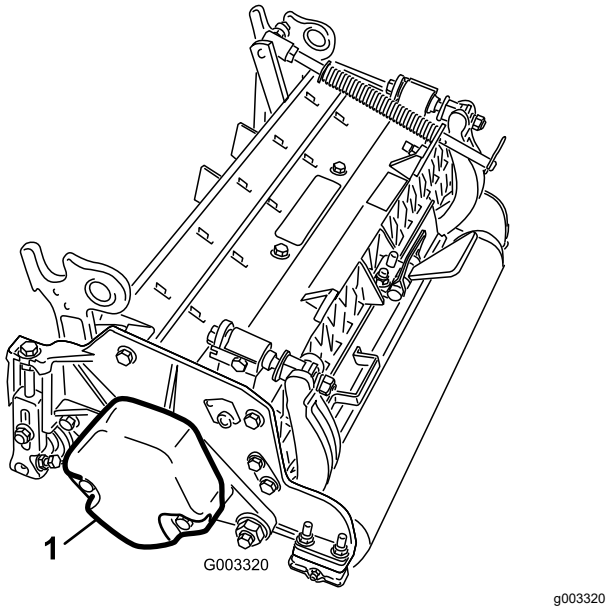

Figure 4

1. Counterweight

Positioning the Turf Compensating Spring and Installing the Hose Guide

Cutting Units 4

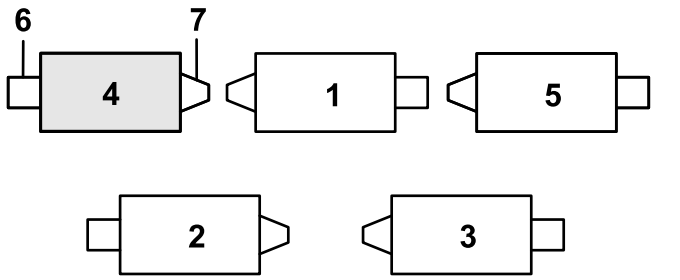

g375671

Figure 5

1. Cutting unit 1
2. Cutting unit 2
3. Cutting unit 3
4. Cutting unit 4
5. Cutting unit 5
6. Reel motor
7. Weight

1. If the hairpin is installed in the rear hole of the compensation-spring rod—remove the hairpin and insert it in the hole next to the bracket (Figure 6).

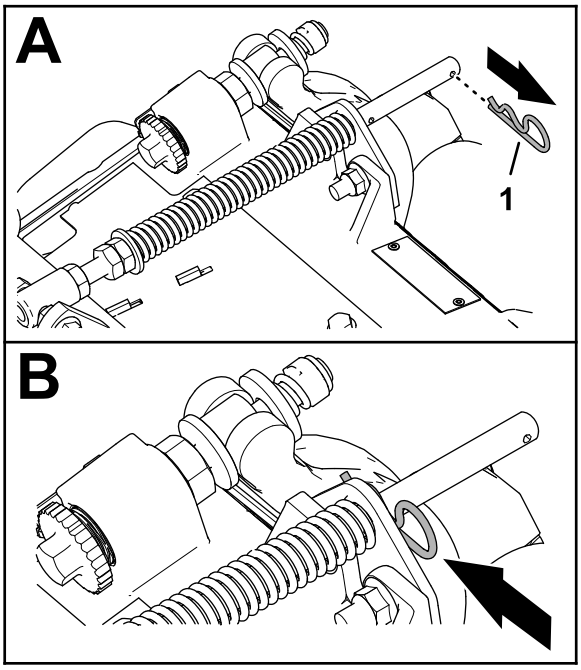

g375689

Figure 6

1. Hairpin

2. Remove the 2 flange locknuts (3/8 inch) and 2 carriage bolts (3/8 x 1-1/4 inches) that secure the turf-compensator bracket to the cutting-unit frame (Figure 7).

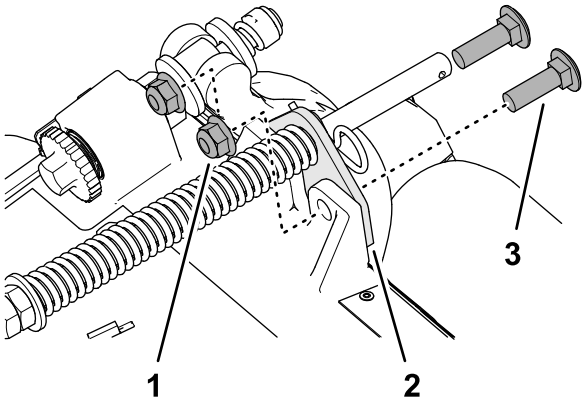

g375690

Figure 7

1. Carriage bolt (3/8 x 1-1/4 inches)
2. Turf-compensator bracket
3. Flange locknut (3/8 inch)

3. Remove the flange locknut (3/8 inch) that secures the capscrew of the turf compensation spring to the right tab of the carrier frame, and remove the compensation spring from the cutting unit (Figure 8).

   Note: Do not remove the flange serrated nut from the capscrew.

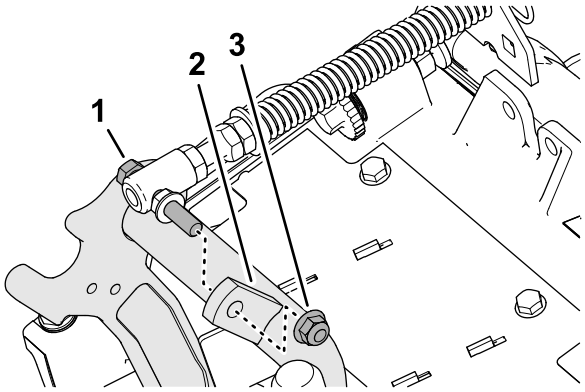

g375691

Figure 8

1. Capscrew
2. Right tab (Carrier frame)
3. Flange locknut (3/8 inch)

4. Assemble the capscrew of the turf compensation spring to the right tab of the carrier frame (Figure 9) with the flange locknut (3/8 inch).

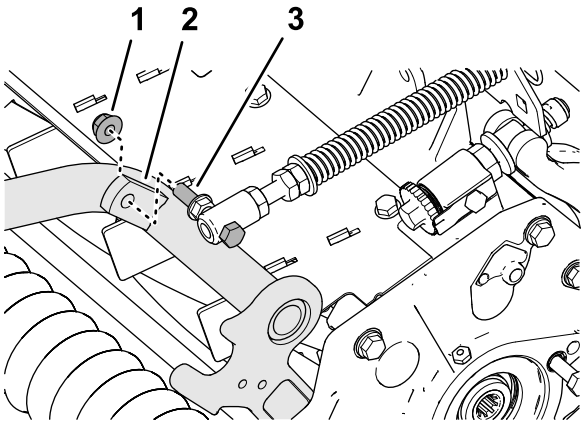

Figure 9

1. Flange locknut (3/8 inch)
2. Right tab (Carrier frame)
3. Capscrew

5. Align the studs of the left hose guide with the holes in the cutting-unit frame and the turf-compensator bracket (Figure 10).

   Note: The support loop of the hose guide aligns toward the centerline of the machine.

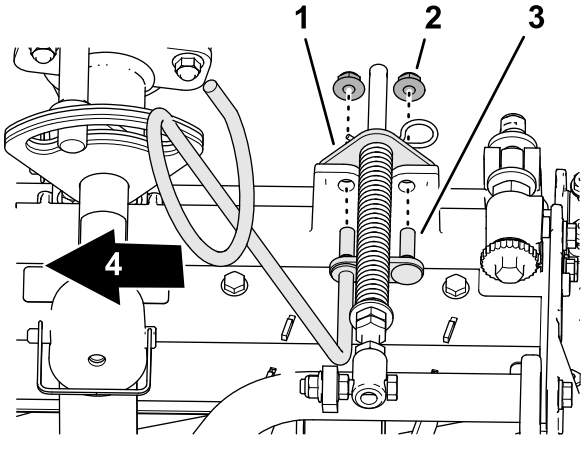

Figure 10

1. Turf-compensator bracket
2. Flange locknut (3/8 inch)
3. Stud (hose guide)
4. Inboard

6. Assemble the hose guide and turf-compensator bracket to the cutting-unit frame with the 2 flange locknuts (3/8 inch).
7. Torque the locknuts and bolts to 37 to 45 N·m (27 to 33 ft-lb).

Installing the Hose Guide

Cutting Units 5

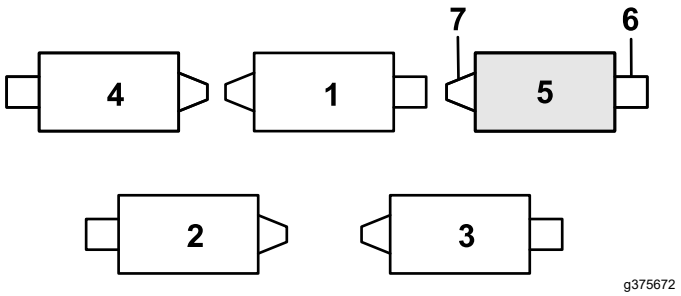

Figure 11

1. Cutting unit 1
2. Cutting unit 2
3. Cutting unit 3
4. Cutting unit 4
5. Cutting unit 5
6. Reel motor
7. Weight

1. If the hairpin is installed in the rear hole of the compensation-spring rod—remove the hairpin and insert it in the hole next to the bracket (Figure 11).

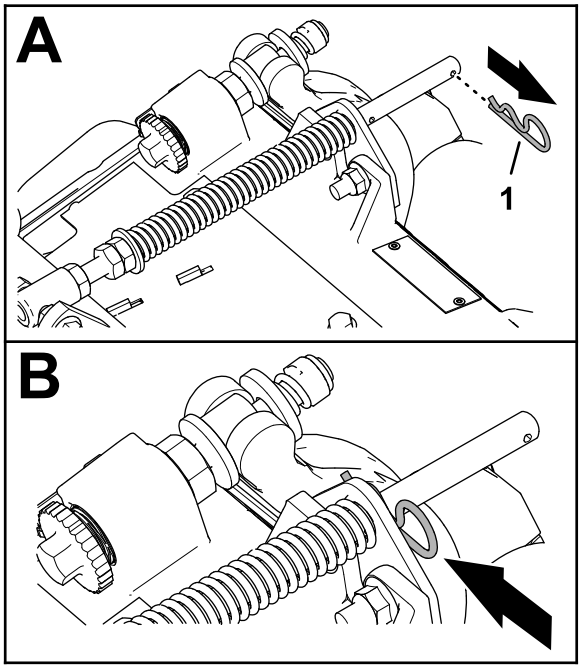

Figure 12

1. Hairpin

2. Remove the 2 flange locknuts (3/8 inch) and 2 carriage bolts (3/8 x 1-1/4 inches) that secure the turf-compensator bracket to the cutting-unit frame (Figure 13).

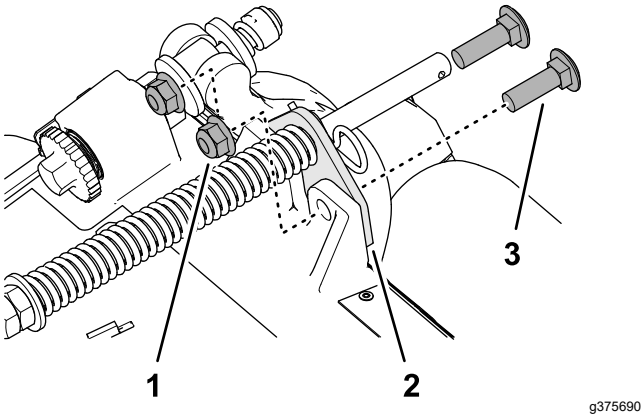

g375690

Figure 13

1. Carriage bolt (3/8 x 1-1/4 inches)
2. Turf-compensator bracket
3. Flange locknut (3/8 inch)

3. Align the studs of the right hose guide with the holes in the cutting-unit frame and the turf-compensator bracket (Figure 14).

   Note: Ensure that the support loop of the hose guide aligns toward the centerline of the machine.

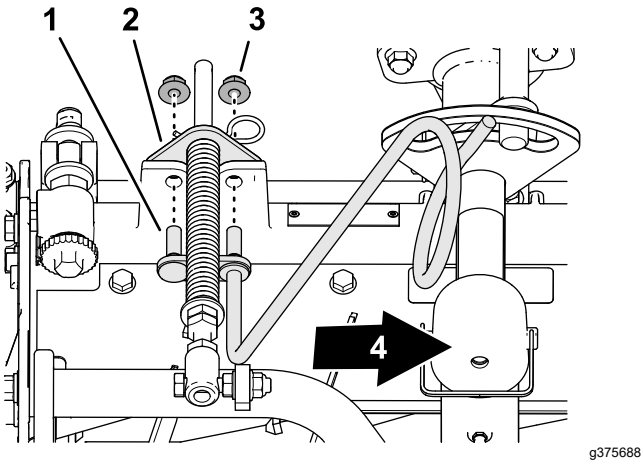

g375688

Figure 14

1. Stud (hose guide)
2. Turf-compensator bracket
3. Flange locknut (3/8 inch)
4. Inboard

4. Assemble the hose guide and turf-compensator bracket to the cutting-unit frame with the 2 flange locknuts (3/8 inch).
5. Torque the locknuts to 37 to 45 N·m (27 to 33 ft-lb).

Positioning the Turf Compensating Spring

Cutting Unit 2

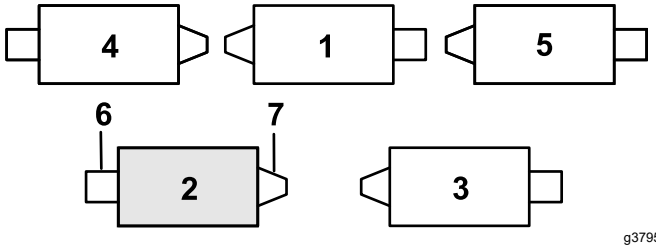

g379514

Figure 15

1. Cutting unit 1
2. Cutting unit 2
3. Cutting unit 3
4. Cutting unit 4
5. Cutting unit 5
6. Reel motor
7. Weight

1. If the hairpin is installed in the rear hole of the compensation-spring rod—remove the hairpin and insert it in the hole next to the bracket (Figure 16).

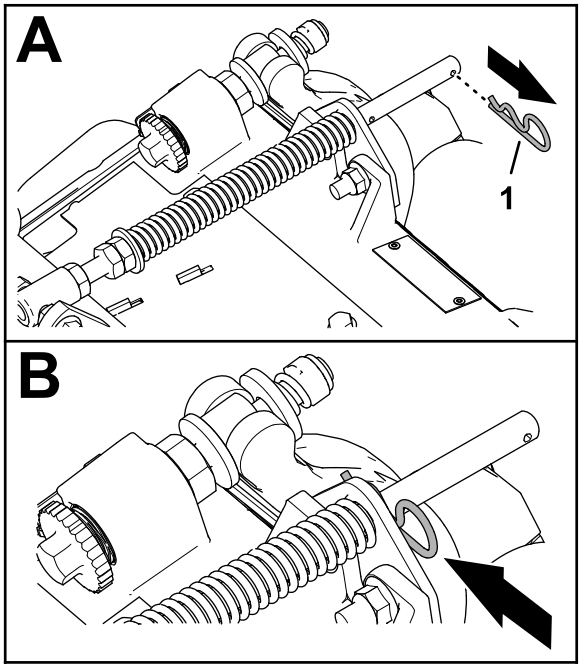

g375689

Figure 16

1. Hairpin

2. Remove the 2 flange locknuts (3/8 inch) and 2 carriage bolts (3/8 x 1-1/4 inches) that secure the turf-compensator bracket to the cutting-unit frame (Figure 17).

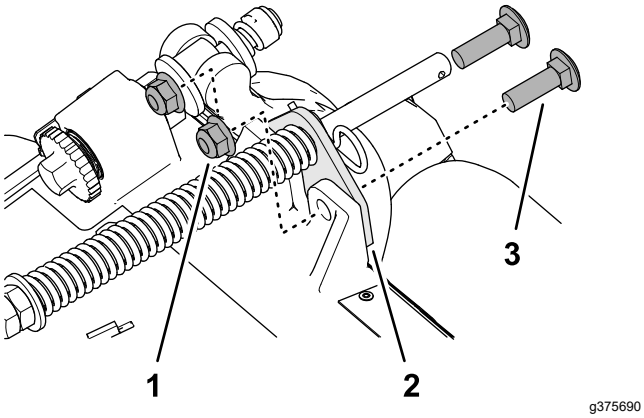

Figure 17

1. Carriage bolt (3/8 x 1-1/4 inches)
2. Turf-compensator bracket
3. Flange locknut (3/8 inch)

3. Remove the flange locknut (3/8 inch) that secures the capscrew of the turf compensation spring to the right tab of the carrier frame, and remove the compensation spring from the cutting unit (Figure 18).

   Note: Do not remove the flange serrated nut from the capscrew.

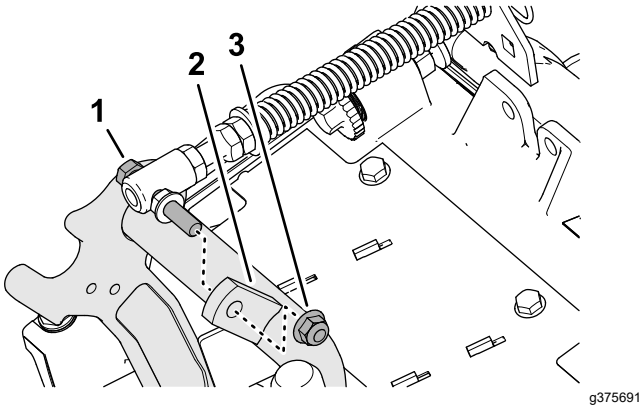

Figure 18

1. Capscrew
2. Right tab (Carrier frame)
3. Flange locknut (3/8 inch)

4. Assemble the capscrew of the turf compensation spring to the right tab of the carrier frame (Figure 19) with the flange locknut (3/8 inch).

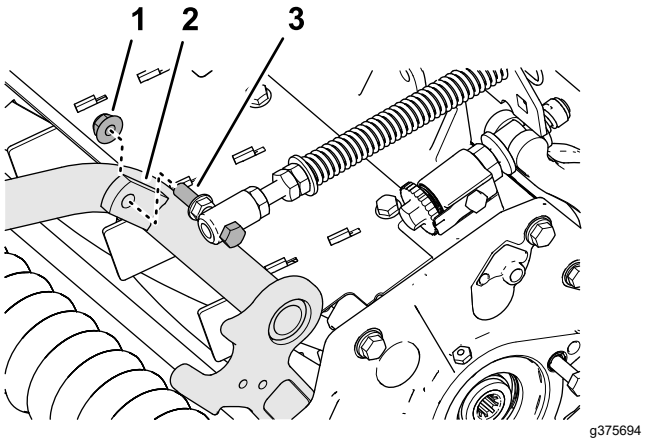

Figure 19

1. Flange locknut (3/8 inch)
2. Right tab (Carrier frame)
3. Capscrew

5. Align the holes in the turf-compensator bracket with the holes in the cutting-unit frame (Figure 20).

   Note: The support loop of the hose guide aligns toward the centerline of the machine.

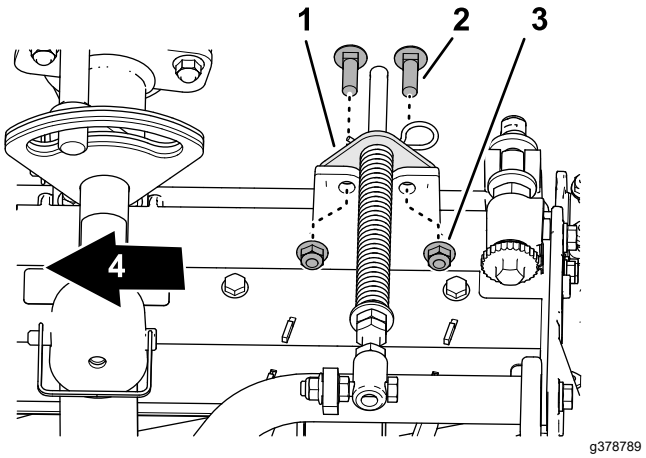

Figure 20

1. Turf-compensator bracket
2. Carriage bolt (3/8 x 1-1/4 inches)
3. Flange locknut (3/8 inch)
4. Inboard

6. Assemble the turf-compensator bracket to the cutting-unit frame with the 2 carriage bolts (3/8 x 1-1/4 inches) and 2 flange locknuts (3/8 inch).
7. Torque the locknuts and bolts to 37 to 45 N·m (27 to 33 ft-lb).

Installing the Kickstand

For each cutting unit, secure the kickstand to the chain bracket with the snapper pin (Figure 21).

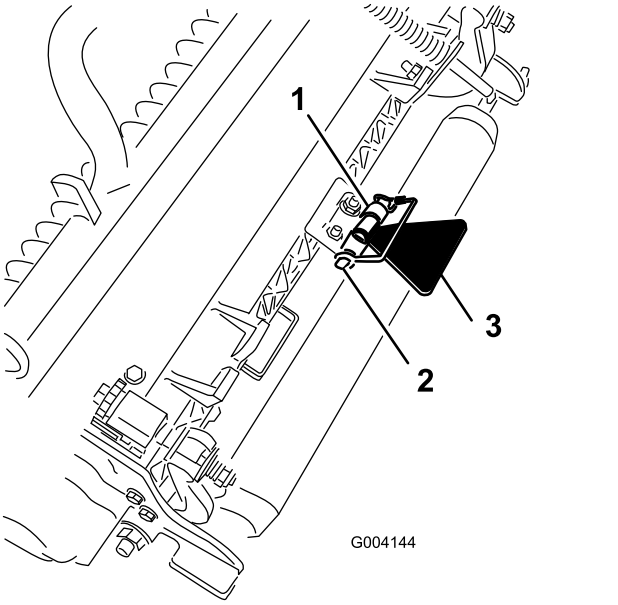

Figure 21

1. Chain bracket
2. Snapper pin
3. Cutting-unit kickstand

Increasing the Rear Cutting Unit Pivot Angle

Increase the pivot angle of the rear cutting units by removing the 2 spacers, 2 hex-socket screws, and 2 flange locknuts (Figure 22 and Figure 23) from the carrier frames of cutting units 2 and 3.

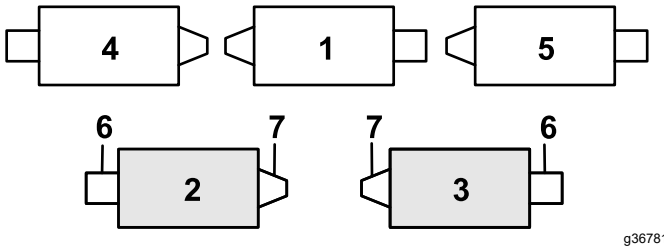

Figure 22

1. Cutting unit 1
2. Cutting unit 2
3. Cutting unit 3
4. Cutting unit 4
5. Cutting unit 5
6. Reel motor
7. Weight

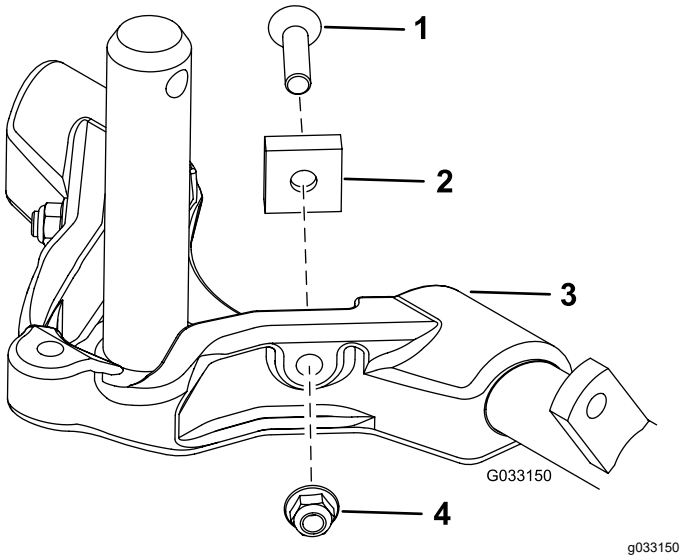

Figure 23

1. Hex-socket screw
2. Spacer
3. Carrier frame
4. Flange locknut

Preparing to Install the Cutting Units

1. Ensure that the countersunk thrust washer is inserted over the carrier-frame shaft (Figure 24).

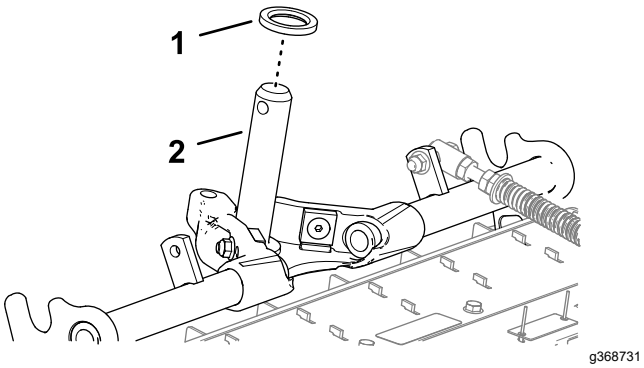

Figure 24

1. Thrust washer (countersunk)
2. Carrier-frame shaft

2. Coat the carrier-frame shaft with clean grease (Figure 25).

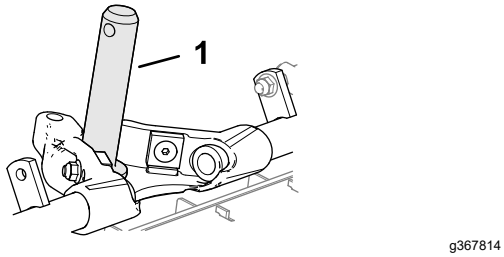

Figure 25

1. Carrier-frame shaft

3. Repeat steps 1 and 2 for the other cutting units.

Installing the Front Cutting Units

1. Slide a cutting unit under the lift arm (Figure 26).

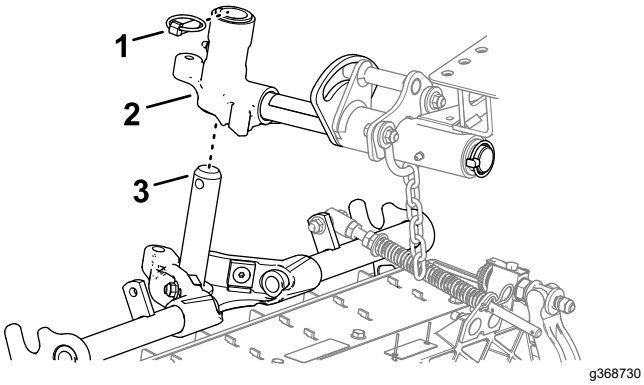

Figure 26

1. Lynch pin
2. Pivot yoke
3. Carrier-frame shaft

2. Insert the shaft of the carrier frame into the pivot yoke of the lift arm.
3. Secure the carrier-frame shaft to the pivot yoke with the lynch pin.
4. Repeat steps 1 and 3 at the other front cutting-unit positions.

Installing the Rear Cutting Units to the Lift Arms

Cutting Units adjusted for a 1.2 cm (3/4 inch) or Higher Height of Cut

1. Slide a cutting unit under the lift arm (Figure 27).

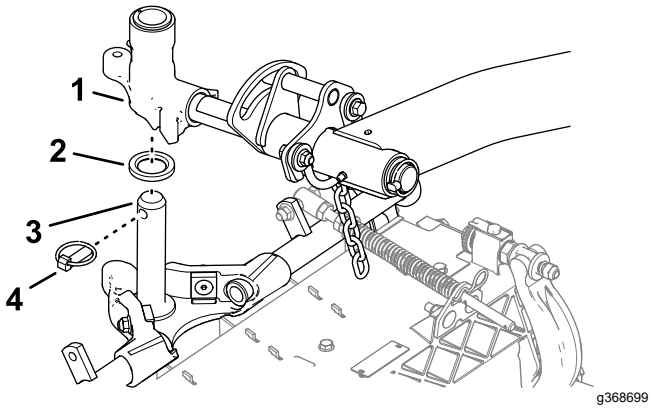

Figure 27

1. Lift-arm pivot shaft
2. Thrust washer (countersunk)
3. Carrier-frame shaft
4. Lynch pin

2. Insert the lift-arm shaft into the lift arm and secure it with the lynch pin.
3. Repeat step 2 for the other rear cutting unit.

Installing the Rear Cutting Units to the Lift Arms

Cutting Units adjusted for a 1.2 cm (3/4 inch) or Lower Height of Cut

1. Remove the lynch pin and washer securing the lift-arm pivot shaft to the lift arm and slide the lift-arm pivot shaft out of the lift arm (Figure 28).

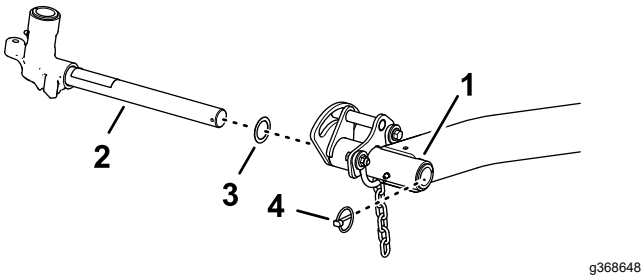

g368648

Figure 28

1. Lift arm (rear cutting unit)
2. Lift-arm pivot shaft
3. Thrust washer
4. Lynch pin

2. Insert the lift-arm yoke onto the carrier frame shaft (Figure 29).

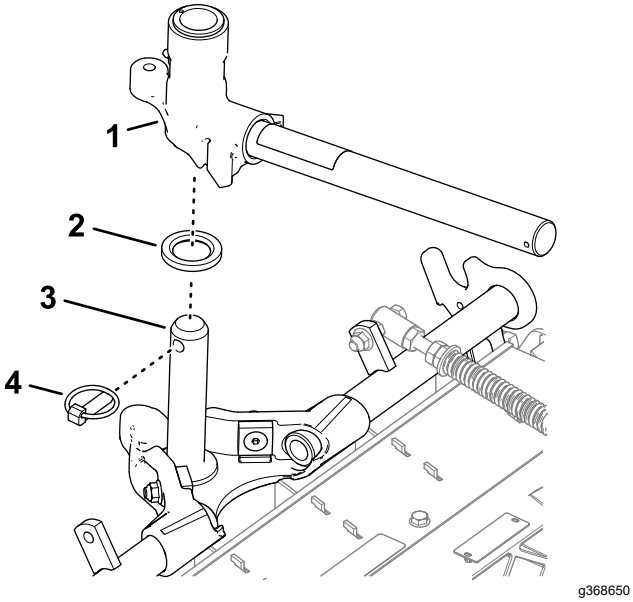

g368650

Figure 29

1. Lift-arm pivot shaft
2. Thrust washer (countersunk)
3. Carrier-frame shaft
4. Lynch pin

3. Slide a cutting unit under the lift arm (Figure 30).

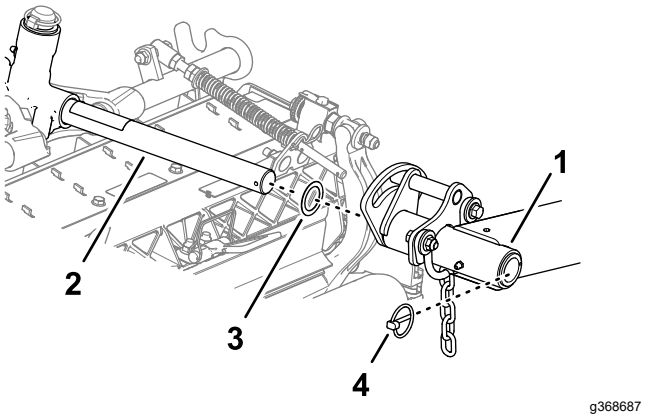

g368687

Figure 30

1. Lift arm (rear cutting unit)
2. Lift-arm pivot shaft
3. Thrust washer
4. Lynch pin

4. Insert the lift-arm shaft into the lift arm and secure it with the lynch pin.
5. Repeat steps 1 through 4 for the other rear cutting unit.

Installing the Cutting Unit Lift-Arm Chains

Secure the lift-arm chain to the chain bracket with the snapper pin (Figure 31).

Note: Use the number of chain links described in the cutting unit *Operator's Manual*.

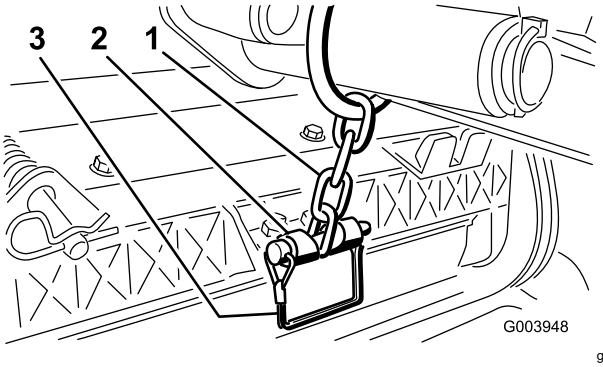

g003948

Figure 31

1. Lift-arm chain
2. Chain bracket
3. Snapper pin

Installing the Reel Motors

1. Coat the spline shaft of the reel motor with clean grease.
2. Oil the reel motor O-ring and install it onto the motor flange.
3. Install the motor by rotating it clockwise so that the motor flanges clear the bolts (Figure 32).

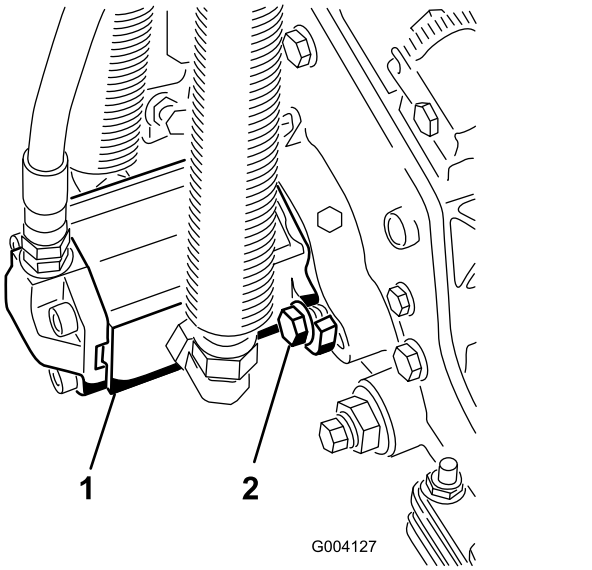

Figure 32

1. Reel-drive motor
2. Mounting bolts

4. Rotate the motor counterclockwise until the flanges encircle the bolts, and then tighten the bolts.

   Important: **Make sure that the reel motor hoses are not twisted, kinked, or at risk of being pinched.**
5. Torque the mounting bolts to (27 to 33 ft-lb).

Entering Cutting Unit Settings

Enter the following cutting-unit information into the InfoCenter:

- Blade count; refer to Setting the Blade Count (page 29).
- Mow speed; refer to Setting the Mow Speed (page 29).
- Height of cut; refer to Setting the Height of Cut (HOC) (page 29).

Note: You need the PIN code to change the blade count, mow speed, and height of cut values in the InfoCenter.

3

Preparing the Machine

No Parts Required

Procedure

1. Park the machine on a level surface, lower the cutting units, and engage the parking brake.
2. Shut off the engine, remove the key, and wait for all moving parts to stop.
3. Check the tire air pressure before use; refer to Checking the Tire Air Pressure (page 73).

   Note: The tires are overinflated for shipping. Adjust the tire air pressure before operating the machine.
4. Check the rear-axle lubricant level; refer to Checking the Oil Level of the Rear Axle (page 75).
5. Check the hydraulic-fluid level; refer to Checking the Hydraulic-Fluid Level (page 85).
6. Grease the machine; refer to Greasing the Bearings and Bushings (page 62).

   Important: **Failure to properly grease the machine will result in premature failure of critical parts.**
7. Open the hood and check the coolant level; refer to Checking the Coolant Level (page 81).
8. Check the level of the engine-oil level, and close and latch the hood; refer to Checking the Engine-Oil Level (page 65).

   Note: The engine ships with oil in the crankcase; however, check the oil level before and after the engine is first started.

4

Installing the Hood Lock for CE Compliance

Parts needed for this procedure:

1	Hood-lock bracket
2	Rivet
1	Screw (1/4 x 2 inch)
2	Flat washer (1/4 inch)
1	Locknut (1/4 inch)

Procedure

1. Unhook the hood latch from the hood-latch bracket (Figure 33).

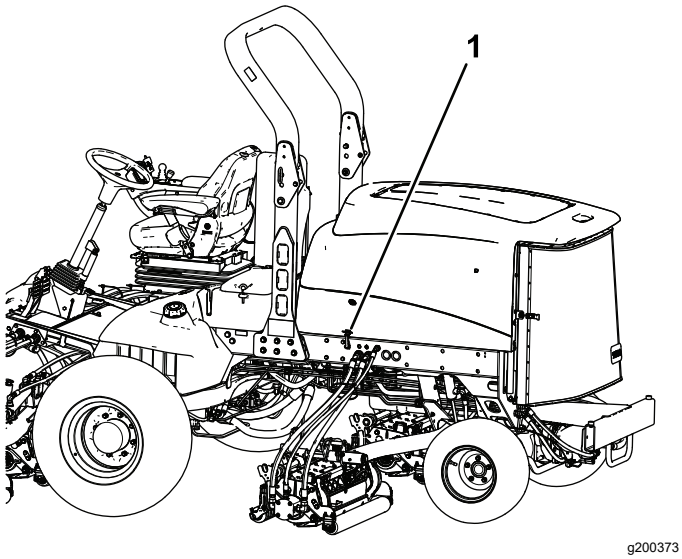

Figure 33

1. Hood latch

2. Remove the 2 rivets securing the hood-latch bracket to the hood (Figure 34).

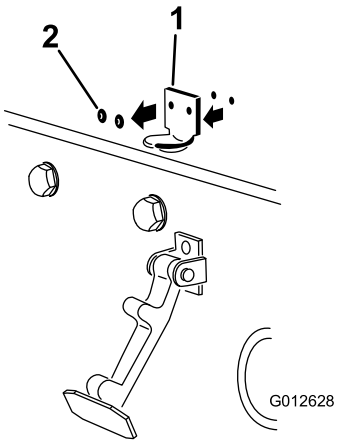

Figure 34

1. Hood-latch bracket
2. Rivets

3. Remove the hood-latch bracket from the hood.
4. While aligning the mounting holes, position the CE lock bracket and the hood-latch bracket onto the hood.

   Note: The lock bracket must be against the hood (Figure 34).

   Do not remove bolt and nut assembly from the lock-bracket arm.

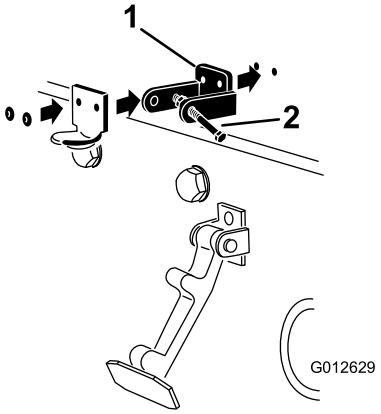

Figure 35

1. CE lock bracket
2. Bolt and nut assembly

5. Align the washers with the holes on the inside of the hood.
6. Rivet the brackets and the washers to the hood (Figure 35).
7. Hook the latch onto the hood-latch bracket (Figure 36).

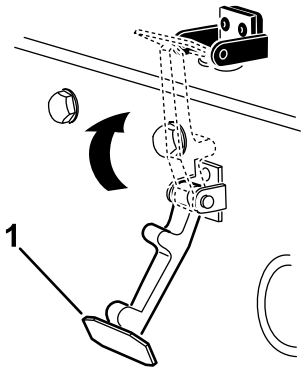

g354465

Figure 36

1. Hood latch

8. Screw the bolt into the other arm of hood-lock bracket to lock the latch in position (Figure 37).

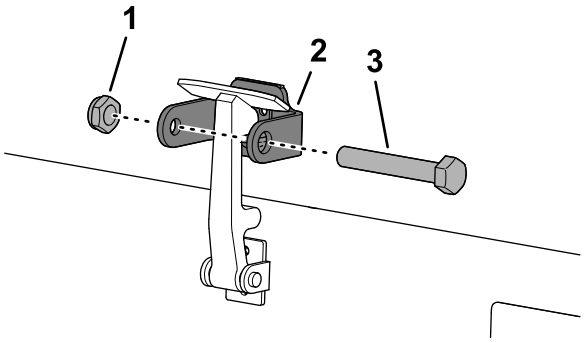

g350021

Figure 37

1. Bolt
2. Nut
3. Arm of the hood-lock bracket

9. Tighten the bolt securely but do not tighten the nut.

5

Applying the CE Decals

Parts needed for this procedure:

1	CE decal
1	Production year decal
1	Warning decal

Procedure

CE Decal Location Table

CE decal—on the hood near the hood lock.

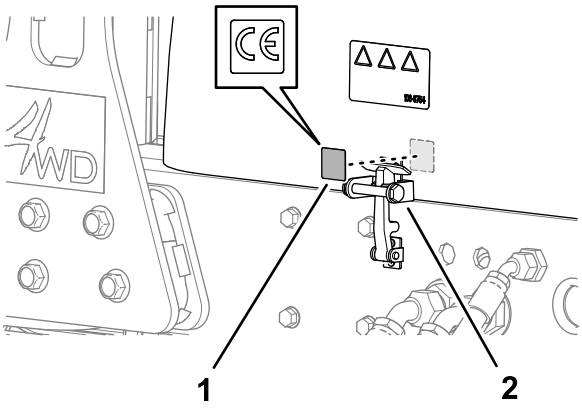

g371042

Figure 38

1.

Production year decal—on frame of the machine near the serial plate.

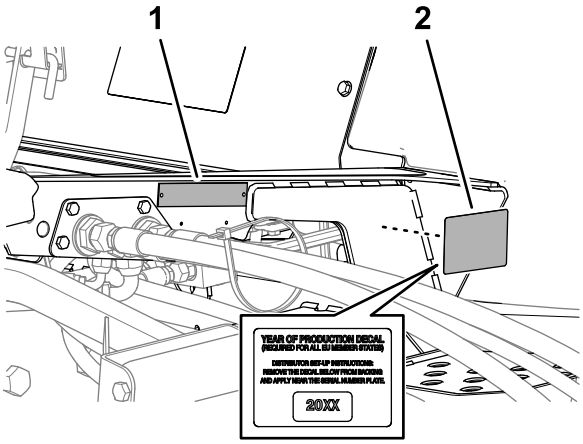

g371044

Figure 39

1. Serial plate
2. Production year decal

CE warning decal—over the standard warning decal.

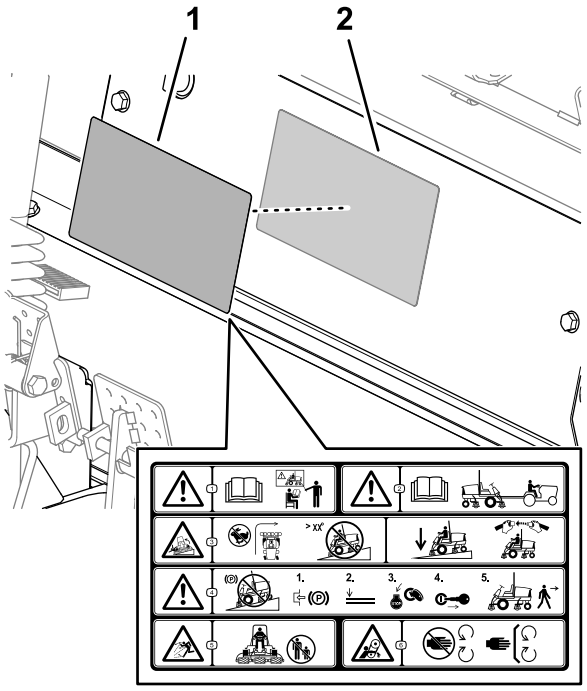

Figure 40

1. CE warning decal
2. Standard warning decal

1. Clean the surface of the machine with alcohol and a clean rag where you are adhering the decal; refer to the CE Decal Location Table.
2. Wait the surface to dry.
3. Remove the backing from the decal.
4. Adhere the decal to the surface.
5. Repeat steps 1 through 4 for the other decals.

Product Overview

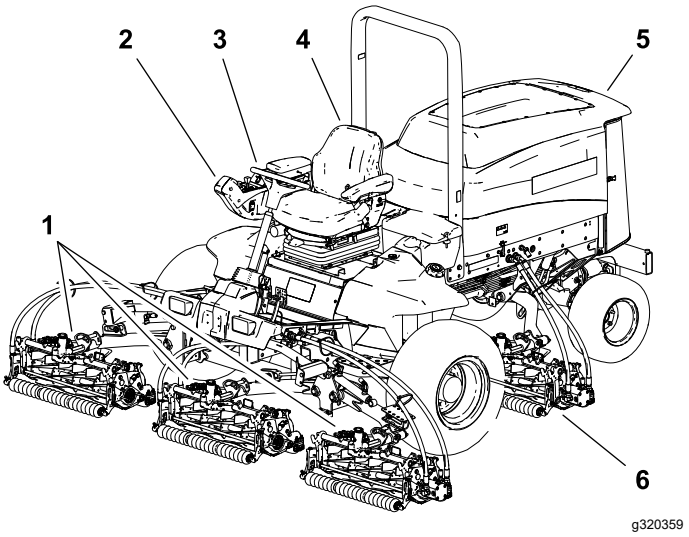

Figure 41

1. Front cutting units
2. Control arm
3. Steering wheel
4. Operator's seat
5. Engine hood
6. Rear cutting unit

Controls

Brake Pedals

The 2 foot pedals (Figure 42) operate individual wheel brakes for turning assistance and to aid in obtaining better side hill traction.

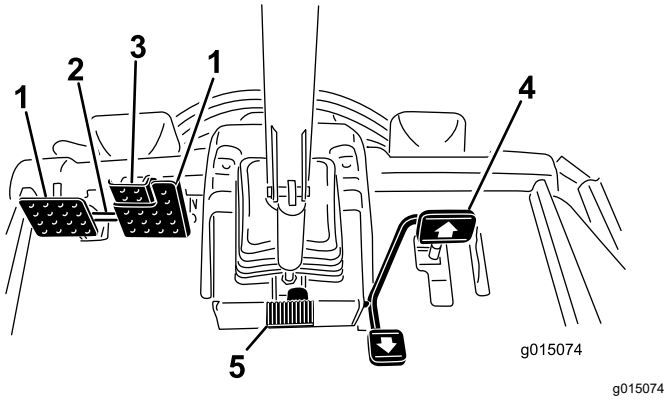

Figure 42

1. Brake pedal
2. Pedal-locking latch
3. Parking-brake pedal
4. Traction pedal
5. Tilt-steering pedal

Pedal-Locking Latch

The pedal-locking latch (Figure 42) connects the pedals together to engage the parking brake.

Parking-Brake Pedal

To engage the parking brake, (Figure 42) connect the pedals together with the pedal-locking latch, push down on the right brake pedal while engaging the toe pedal.

Note: When the parking brake is engaged, the parking brake symbol displays in the InfoCenter.

To release the parking brake, press 1 of the brake pedals until the parking-brake latch retracts.

Traction Pedal

The traction pedal (Figure 42) controls the forward and reverse operation. Press the top of the pedal to move forward and the bottom of the pedal to move backward. Ground speed depends on how far you press the pedal. For no load, maximum ground speed, press the engine-speed switch to high idle and then fully press the traction pedal.

To stop, reduce your foot pressure on the traction pedal and allow it to return to the center position.

Tilt Steering Pedal

To tilt the steering wheel toward you, press the foot pedal (Figure 42) down, and pull the steering tower toward you to the most comfortable position and then release the pedal.

Speed-Limiter Screws

Adjust the screw(s) (Figure 43) to limit the amount the traction pedal can be pressed in the forward or reverse direction to limit speed.

Important: **The speed-limiter screw must stop the traction pedal before the pump reaches full stroke ; otherwise, damage to the pump may occur.**

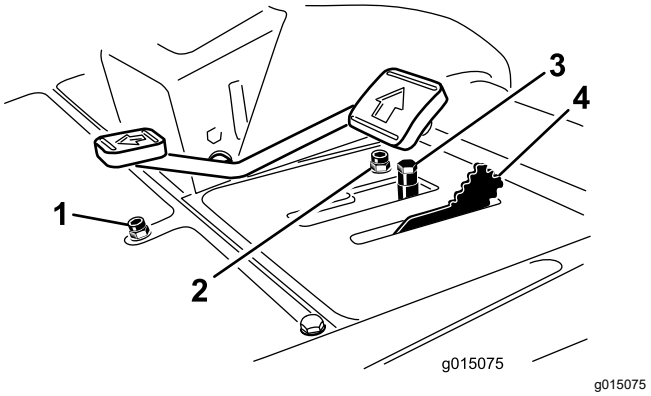

g015075

Figure 43

1. Reverse speed limiter screw
2. Forward speed limiter screw
3. Spacers
4. Mow-speed limiter

Mow-Speed Limiter

When the mow-speed limiter (Figure 43) is rotated forward, it allows the cutting units to engage and limits the maximum ground speed during mowing. You change the position of the spacers to adjust mowing ground speed. When driving machine between job sites, rotate the mow-speed limiter back for maximum transport speed.

Lower Mow/Raise Control Lever

Use the lower mow/raise control lever (Figure 44) raises and lowers the cutting units. The lever also starts and stops the reels when the reels are enabled in the mow mode.

Note: The cutting units cannot be lowered when the mow/transport lever is in the transport position.

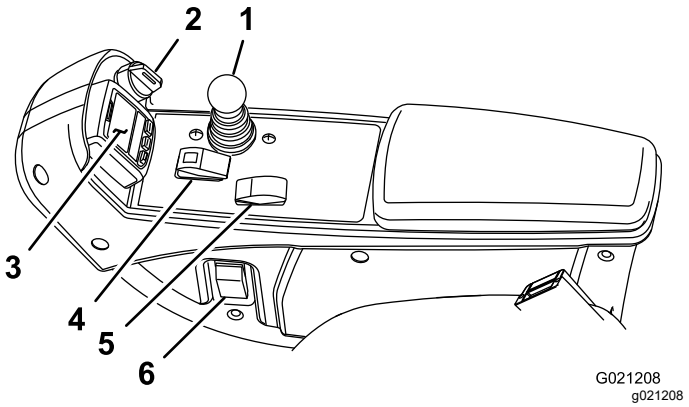

g021208

Figure 44

1. Lower mow/raise control lever
2. Key switch
3. InfoCenter
4. PTO switch
5. Engine-speed switch
6. Headlight switch

Key Switch

The key switch (Figure 44) has 3 positions: OFF, ON/PREHEAT, and START.

InfoCenter

The InfoCenter LCD display shows information about your machine, such as the operating status, various diagnostics, and other information about the machine (Figure 44).

PTO Switch

The PTO switch (Figure 44) has 2 positions: ENGAGE and DISENGAGE. Press the PTO button forward to engage the cutting-unit blades. Press the button back to disengage the cutting-unit blades.

Engine-Speed Switch

The engine-speed switch (Figure 44) has 2 modes to change the engine speed. By momentarily tapping the switch, you can increase or decrease the engine speed in 100 rpm increments. Press and hold the switch to move the engine speed directly to high or low idle, depending on which end of the switch you press.

Headlight Switch

Press the switch to turn on the headlights (Figure 44).

Power Point

Use the power point (Figure 45) to power optional 12-volt electrical accessories.

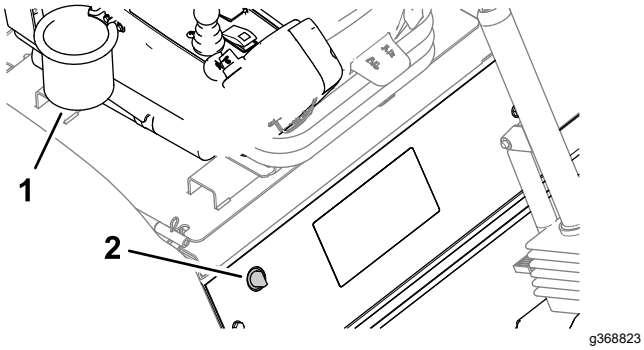

Figure 45

1. Power point
2. Bag holder

Bag Holder

Use the bag holder (Figure 45) for storage.

Backlap Levers

Use the backlap levers to control the cutting unit rotation direction when backlapping the reels (Figure 46).

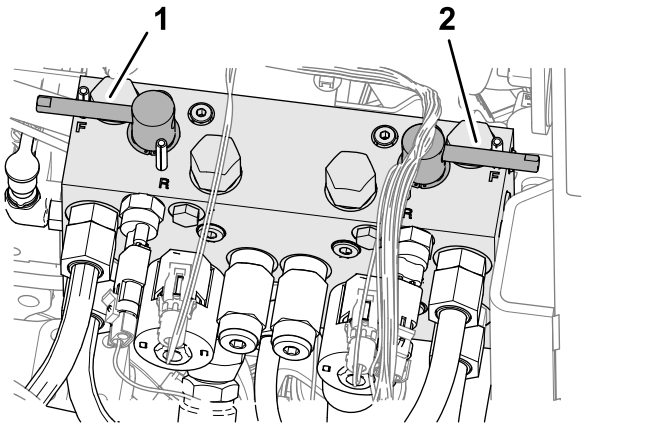

Figure 46

1. Front cutting-unit backlap lever
2. Rear cutting-unit backlap lever

Using the InfoCenter LCD Display

The InfoCenter LCD display shows information about your machine, such as the operating status, various diagnostics, and other information about the machine (Figure 47) There is a splash screen and main information screen of the InfoCenter. You can switch between the splash screen and main information screen, at any time, by pressing any of the InfoCenter buttons and then selecting the appropriate directional arrow.

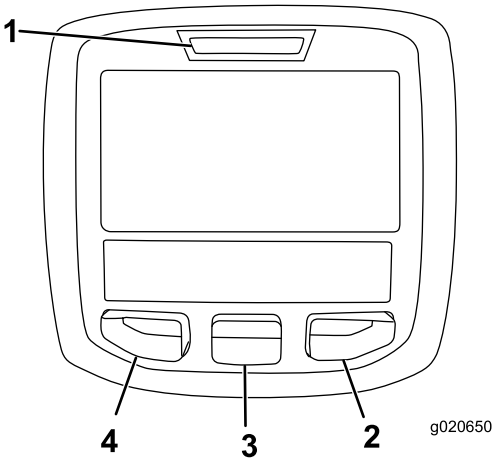

Figure 47

1. Indicator light
2. Right button
3. Middle button
4. Left button

- Left Button, Menu Access/Back Button—press this button to access the InfoCenter menus. You can use it to back out of any menu you are currently using.
- Middle Button—use this button to scroll down menus.
- Right Button—use this button to open a menu where a right arrow indicates additional content.

- Manual Fan Reversal—activated by pressing the left and right buttons simultaneously.
- Beeper—activated when lowering the decks or for advisories and faults.

  Note: The purpose of each button may change depending on what is required at the time. Each button is labeled with an icon displaying its current function.

InfoCenter Icon Description

SERVICE DUE	Indicates when scheduled service should be performed
	Hours remaining until service
	Reset the service hours
	Engine rpm/status—indicates the engine speed
	Info icon
	Hour meter
	Fast
	Slow
	Fan reversal—indicates when the fan is reversed
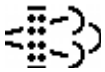	Stationary regeneration required
	Air intake heater is active
	Raise cutting units
	Lower cutting units
	Operator must sit in seat
	Parking brake indicator—indicates when the parking brake is On
H	Identifies the range as High
N	Neutral
L	Identifies the range as Low

InfoCenter Icon Description (cont'd.)

	Coolant temperature—indicates the engine coolant temperature in either °C or °F
	Temperature (hot)
	Denied or not allowed
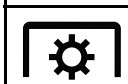	PTO is engaged
	Engine Start
	Stop or shutdown
	Engine
	Key switch
	Indicates when the cutting units are being lowered
	Indicates when the cutting units are being raised
PIN	PIN code
	Hydraulic fluid temperature—indicates the temperature of the hydraulic fluid
CAN	CAN bus
	InfoCenter
Bad	Bad or failed
	Bulb
OUT	Output of TEC controller or control wire in harness
HI	High: over allowed range
LO	Low: under allowed range
HI/LO	Out of range
	Switch
	Operator must release switch
	Operator should change to indicated state

InfoCenter Icon Description (cont'd.)

Symbols are often combined to form sentences. Some examples are shown below	
	Operator should put machine in neutral
	Engine start denied
	Engine shutdown
	Engine coolant too hot
	Hydraulic fluid too hot
	NOx control diagnosis malfunction; drive the machine back to the shop and contact your authorized Toro distributor (software version F and later).
	DPF ash accumulation notification. Refer to DPF Ash Accumulation (page 42) in the maintenance section for details.
	Sit down or set parking brake

🔒 Accessible only by entering PIN

Using the Menus

To access the InfoCenter menu system, press the menu access button while at the main screen. This will bring you to the main menu. Refer to the following tables for a synopsis of the options available from the menus:

Main Menu	
Menu Item	**Description**
Faults	The Faults menu contains a list of the recent machine faults. Refer to the *Service Manual* or your authorized Toro distributor for more information on the Faults menu and the information contained there.
Service	The Service menu contains information on the machine such as hours of use counters and other similar numbers.
Diagnostics	The Diagnostics menu displays the state of each machine switch, sensor, and control output. You can use this to troubleshoot certain issues as it will quickly tell you which machine controls are on and which are off.
Settings	The Settings menu allows you to customize and modify configuration variables on the InfoCenter display.
About	The About menu lists the model number, serial number, and software version of your machine.

Service	
Menu Item	**Description**
Hours	Lists the total number of hours that the machine, engine, and PTO have been on, as well as the number of hours the machine has been transported and service due
Counts	Lists numerous counts the machine has experienced

Diagnostics	
Menu Item	**Description**
Cutting Units	Indicates the inputs, qualifiers, and outputs for raising and lowering the cutting units
Hi/Low Range	Indicates the inputs, qualifiers, and outputs for driving in transport mode
PTO	Indicates the inputs, qualifiers, and outputs for enabling the PTO circuit
Engine Run	Indicates the inputs, qualifiers, and outputs for starting the engine
Backlap	Indicates the inputs, qualifiers, and outputs for operating the backlap function

Settings	
Menu Item	**Description**
Units	Controls the units used on the InfoCenter (English or Metric)
Language	Controls the language used on the InfoCenter*
LCD Backlight	Controls the brightness of the LCD display
LCD Contrast	Controls the contrast of the LCD display
Front Backlap Reel Speed	Controls the speed of the front reels in backlap mode

Rear Backlap Reel Speed	Controls the speed of the rear reels in backlap mode
Protected Menus	Allows a person authorized by your company with the PIN code to access protected menus
Auto Idle 🔒	Controls the amount of time allowed before returning the engine to low idle when the machine is stationary
Blade Count 🔒	Controls the number of blades on the reel for reel speed
Mow Speed 🔒	Controls the ground speed for determining the reel speed
Height of cut (HOC) 🔒	Controls the height of cut (HOC) for determining the reel speed
F Reel RPM 🔒	Displays the calculated reel speed position for the front reels. The reels can also be manually adjusted
R Reel RPM 🔒	Displays the calculated reel speed position for the rear reels. The reels can also be manually adjusted

*Only "operator-faced" text is translated. Faults, Service, and Diagnostics screens are "service-faced.". Titles will be in the selected language, but menu items are in English.

🔒 Protected under Protected Menus—accessible only by entering PIN

About	
Menu Item	**Description**
Model	Lists the model number of the machine
SN	Lists the serial number of the machine
Machine Controller Revision	Lists the software revision of the master controller
InfoCenter Revision	Lists the software revision of the InfoCenter
CAN Bus	Lists the machine communication bus status

Protected Menus

There are 7 operating configuration settings that are adjustable within the Settings Menu of the InfoCenter: Auto Idle, Time Delay, Blade Count, Mow Speed, Height of Cut (HOC), F Reel RPM, and R Reel RPM. These settings can be locked by using the Protected Menu.

Note: At the time of delivery, the initial password code is programmed by your distributor.

Accessing Protected Menus

Note: The factory default PIN code for you machine is either 0000 or 1234.

If you changed the PIN code and forgot the code, contact your authorized Toro distributor for assistance.

1. From the MAIN MENU, use the center button to scroll down to the SETTINGS MENU and press the right button (Figure 48).

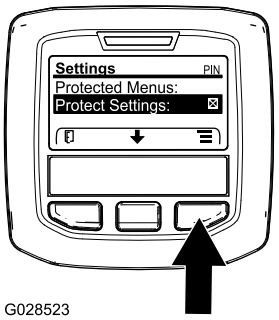

g028523

Figure 48

2. In the SETTINGS MENU, use the center button to scroll down to the PROTECTED MENU and press the right button (Figure 49A).

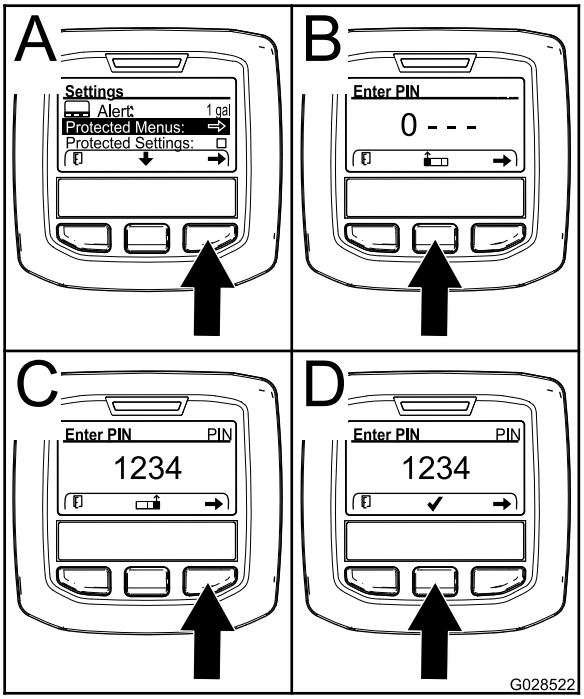

g028522

Figure 49

3. To enter the PIN code, press the center button until the correct first digit appears, then press the right button to move on to the next digit (Figure 49B and Figure 49C). Repeat this step until the last digit is entered and press the right button once more.

4. Press the middle button to enter the PIN code (Figure 49D).

   Wait until the red indicator light of the InfoCenter illuminates.

   Note: If the InfoCenter accepts the PIN code and the protected menu is unlocked, the word “PIN” displays in the upper right corner of the screen.

Note: Rotate the key switch to the OFF position and then to the ON position locks the protected menu.

You can view and change the settings in the Protected Menu. Once you access the Protected Menu, scroll down to Protect Settings option. Use the right button to change the setting. Setting the Protect Settings to OFF allows you to view and change the settings in the Protected Menu without entering the PIN code. Setting the Protect Settings to ON hides the protected options and requires you to enter the PIN code to change the setting in the Protected Menu. After you set the PIN code, rotate the key switch OFF and back to the ON position to enable and save this feature.

Setting the Auto Idle

1. In the Settings Menu, scroll down to Auto Idle.
2. Press the right button to change the auto idle time between Off, 8S, 10S, 15S, 20S, and 30S.

Setting the Blade Count

1. In the Settings Menu, scroll down to Blade Count
2. Press the right button to change the blade count between 5, 8, or 11 blades.

Setting the Mow Speed

1. In the Settings Menu, scroll down to Mow Speed.
2. Press the right button to select mow speed.
3. Use the center and right button to select the appropriate mow speed set on the mechanical mow-speed limiter on the traction pedal.
4. Press the left button to exit mow speed and save the setting.

Setting the Height of Cut (HOC)

1. In the Settings Menu, scroll down to HOC.
2. Press the right button to select HOC.
3. Use the center and right button to select the appropriate HOC setting.

   Note: If the exact setting is not displayed, select the nearest HOC setting from the list displayed.
4. Press the left button to exit HOC and save the setting.

Setting the Front and Rear Reel Speeds

Although the front and rear reel speeds are calculated by inputting the number of blades, mow speed and HOC into the InfoCenter, you can manually change the setting to accommodate different mowing conditions.

1. Scroll down to the F Reel RPM, R Reel RPM, or both.
2. Press the right button to change the reel speed value. As the speed setting changes, the display continues to show the calculated reel speed based on blade count, mow speed, and HOC previously entered, but the new speed value also displays.

Specifications

Note: Specifications and design are subject to change without notice.

Traction Unit Specifications

Width of cut, 27-inch cutting units	307 cm (121 inches)
Width of cut, 32-inch cutting units	320 cm (126 inches)
Overall width, 27-inch cutting units down	345 cm (136 inches)
Overall width, 32-inch cutting units down	358 cm (141 inches)
Overall width, cutting units up (transport)	239 cm (94 inches)
Overall length	370 cm (146 inches)
Height with ROPS	220 cm (87 inches)
Track width, front	229 cm (90 inches)
Track width, rear	141 cm (55.5 inches)
Wheelbase	171 cm (67.5 inches)
Net weight (with no cutting units and no fluids)	1574 kg (3,470 lb)

Attachments/Accessories

A selection of Toro approved attachments and accessories is available for use with the machine to enhance and expand its capabilities. Contact your Authorized Service Dealer or authorized Toro distributor or go to www.Toro.com for a list of all approved attachments and accessories.

To ensure optimum performance and continued safety certification of the machine, use only genuine Toro replacement parts and accessories. Replacement parts and accessories made by other manufacturers could be dangerous, and such use could void the product warranty.

Operation

Before Operation

Before Operation Safety

General Safety

- Never allow children or untrained people to operate or service the machine. Local regulations may restrict the age of the operator. The owner is responsible for training all operators and mechanics.
- Become familiar with the safe operation of the equipment, operator controls, and safety signs.
- Before you leave the operator's position, do the following:
  - Park the machine on a level surface.
  - Disengage and lower the cutting units.
  - Engage the parking brake.
  - Shut off the engine and remove the key.
  - Wait for all movement to stop.
  - Allow the machine to cool before adjusting, servicing, cleaning, or storing it.
- Know how to stop the machine and shut off the engine quickly.
- Do not operate the machine without all guards and other safety protective devices in place and functioning properly on the machine.
- Before mowing, always inspect the machine to ensure that the cutting units are in good working condition.
- Inspect the area where you will use the machine and remove all objects that the machine could throw.
- This product generates an electromagnetic field. If you wear an implantable electronic medical device, consult your health care professional before using this product.

Fuel Safety

- Use extreme care in handling fuel. It is flammable and its vapors are explosive.
- Extinguish all cigarettes, cigars, pipes, and other sources of ignition.
- Use only an approved fuel container.
- Do not remove the fuel cap or fill the fuel tank while the engine is running or hot.
- Do not add or drain fuel in an enclosed space.

- Do not store the machine or fuel container where there is an open flame, spark, or pilot light, such as on a water heater or other appliance.
- If you spill fuel, do not attempt to start the engine; avoid creating any source of ignition until the fuel vapors have dissipated.

Filling the Fuel Tank

Fuel Tank Capacity

83 L (22 US gallons)

Fuel Specification

Important: **Use only ultra-low sulphur diesel fuel. Fuel with higher rates of sulfur degrades the diesel oxidation catalyst (DOC), which causes operational problems and shortens the service life of engine components.**

Failure to observe the following cautions may damage the engine.

- Never use kerosene or gasoline instead of diesel fuel.
- Never mix kerosene or used engine oil with the diesel fuel.
- Never keep fuel in containers with zinc plating on the inside.
- Do not use fuel additives.

Petroleum Diesel

Cetane rating: 45 or higher

Sulfur content: Ultra-low sulfur (<15 ppm)

Fuel Table

Diesel fuel specification	Location
ASTM D975 No. 1-D S15 No. 2-D S15	USA
EN 590	European Union
ISO 8217 DMX	International
JIS K2204 Grade No. 2	Japan
KSM-2610	Korea

- Use only clean, fresh diesel fuel or biodiesel fuels.
- Purchase fuel in quantities that can be used within 180 days to ensure fuel freshness.

Use summer-grade diesel fuel (No. 2-D) at temperatures above -7°C (20°F) and winter-grade fuel (No. 1-D or No. 1-D/2-D blend) below that temperature.

Note: Use of winter-grade fuel at lower temperatures provides lower flash point and cold flow characteristics which eases starting and reduces fuel filter plugging.

Using summer-grade fuel above -7°C (20°F) contributes toward longer fuel pump life and increased power compared to winter-grade fuel.

Biodiesel

This machine can also use a biodiesel blended fuel of up to B20 (20% biodiesel, 80% petroleum diesel).

Sulfur content: Ultra-low sulfur (<15 ppm)

Biodiesel fuel specification: ASTM D6751 or EN14214

Blended fuel specification: ASTM D975, EN590, or JIS K2204

Important: **The petroleum diesel portion must be ultra-low sulfur.**

Observe the following precautions:

- Biodiesel blends may damage painted surfaces.
- Use B5 (biodiesel content of 5%) or lesser blends in cold weather.
- Monitor seals, hoses, gaskets in contact with fuel as they may be degraded over time.
- Fuel filter plugging may be expected for a time after converting to biodiesel blends.
- Contact your authorized Toro distributor if you wish for more information on biodiesel.

Adding Fuel

1. Park the machine on a level surface, lower the cutting units, shut off the engine, and remove the key.
2. Using a clean rag, clean the area around the fuel-tank cap.
3. Remove the cap from the fuel tank (Figure 50).

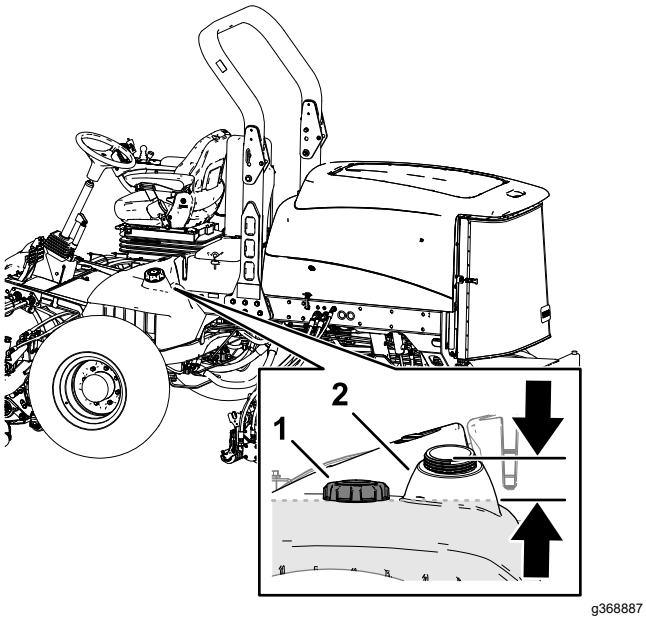

Figure 50

1. Fuel-tank cap
2. Filler neck

4. Fill the tank until the level is to the bottom of the filler neck with the specified fuel.
5. Install the fuel-tank cap tightly.

   Note: If possible, fill the fuel tank after each use. Filling the fuel tank minimizes condensation inside the tank.

Performing Daily Maintenance

Service Interval: Before each use or daily

Before starting the machine each day, perform the Each Use/Daily procedures listed in Maintenance (page 56).

Checking the Interlock Switches

Service Interval: Before each use or daily

⚠ CAUTION

If safety interlock switches are disconnected or damaged, the machine could operate unexpectedly, causing personal injury.

- **Do not tamper with the interlock switches.**
- **Check the operation of the interlock switches daily and replace any damaged switches before operating the machine.**

Important: **If your machine fails any of the interlock switch checks, contact your authorized Toro distributor.**

Preparing the Machine

1. Drive the machine slowly to an open area.
2. Lower the cutting units, shut off the engine, and engage the parking brake.

Checking the Traction Pedal Start-Interlock

1. Sit in the operator's seat.
2. Engage the parking brake.
3. Press the PTO switch to the DISENGAGE position.
4. Press the traction pedal.
5. Rotate the key to the START position.

   Note: The starter should not crank the engine with the traction pedal pressed.

Checking the PTO-Start Interlock

1. Sit in the operator's seat.
2. Press the PTO switch to the ENGAGE position.
3. Start the engine.

   Note: The engine should not start with the PTO switch in the ENGAGE position.

Checking the PTO-Run Interlock

1. Sit in the operator's seat.
2. Press the PTO switch to the DISENGAGE position.
3. Start the engine.
4. Rise from the seat.
5. Press the PTO switch to the ENGAGE position.

   Note: The PTO should not run when you are out of the operator's seat.

Checking the Parking Brake and Traction Pedal Run-Interlock

1. Sit in the operator's seat.
2. Engage the parking brake.
3. Press the PTO switch to the DISENGAGE position.
4. Keep your foot off the traction pedal.
5. Start the engine.
6. Press the traction pedal.

   Note: The engine should shut off when the parking brake is engaged and the traction pedal is pressed.

Adjusting the Seat

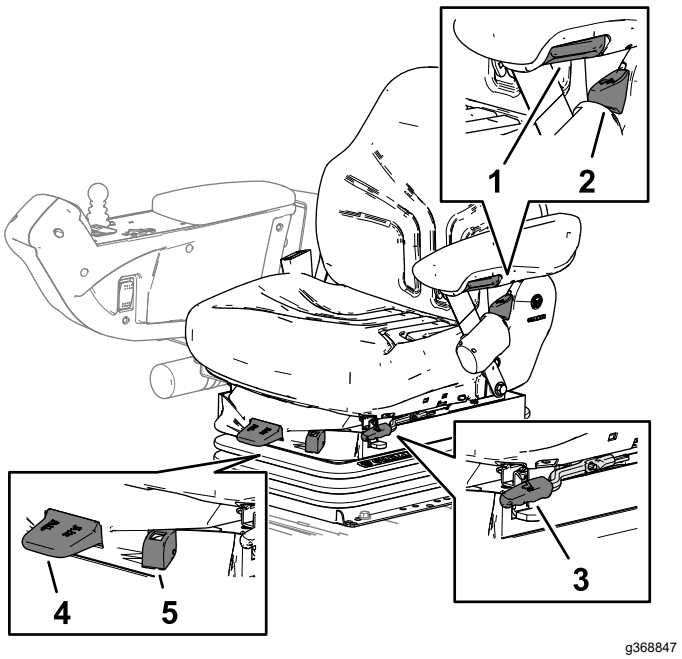

Figure 51

1. Armrest adjusting knob
2. Seat back adjusting lever
3. Fore and aft adjusting lever
4. Weight adjusting lever
5. Weight gauge

Seat Armrest Adjusting Knob

Rotate the knob to adjust the seat armrest angle (Figure 51).

Seat Back Adjusting Lever

Move the lever to adjust the seat back angle (Figure 51).

Fore and Aft Adjusting Lever

Pull out on the lever to slide the seat fore or aft (Figure 51).

Weight Adjusting Lever

Adjust the seat to your weight (Figure 51). Pull up on the lever to increase the air pressure and push down to decrease the air pressure. The proper adjustment is attained when the weight gauge is in the green region.

Weight gauge

The weight gauge indicates when the seat is adjusted to the weight of the operator (Figure 51). Height adjustment is made by positioning the suspension within the range of the green region.

During Operation

During Operation Safety

General Safety

- The owner/operator can prevent and is responsible for accidents that may cause personal injury or property damage.
- Wear appropriate clothing, including eye protection; long pants; substantial, slip-resistant footwear; and hearing protection. Tie back long hair and do not wear loose clothing or loose jewelry.
- Do not operate the machine while ill, tired, or under the influence of alcohol or drugs.
- Use your full attention while operating the machine. Do not engage in any activity that causes distractions; otherwise, injury or property damage may occur.
- Before you start the engine, ensure that all drives are in neutral, the parking brake is engaged, and you are in the operating position.
- Do not carry passengers on the machine and keep bystanders and children out of the operating area.
- Operate the machine only in good visibility to avoid holes or hidden hazards.
- Avoid mowing on wet grass. Reduced traction could cause the machine to slide.
- Keep your hands and feet away from the cutting units.
- Look behind and down before backing up to be sure of a clear path.
- Use care when approaching blind corners, shrubs, trees, or other objects that may obscure your vision.
- Stop the cutting units whenever you are not mowing.
- Slow down and use caution when making turns and crossing roads and sidewalks with the machine. Always yield the right-of-way.
- Operate the engine only in well-ventilated areas. Exhaust gases contain carbon monoxide, which is lethal if inhaled.
- Do not leave a running machine unattended.
- Before you leave the operator’s position, do the following:
  - Park the machine on a level surface.
  - Disengage and lower the cutting units.
  - Engage the parking brake.
  - Shut off the engine and remove the key.
  - Wait for all movement to stop.

- Allow the machine to cool before adjusting, servicing, cleaning, or storing it.

- Operate the machine only in good visibility and appropriate weather conditions. Do not operate the machine when there is the risk of lightning.
- Use the cruise control (if equipped) only when you can operate the machine in an open, flat area that is free from obstacles and where the machine can move at a constant speed without interruption.

Rollover Protection System (ROPS) Safety

- Do not remove any of the ROPS components from the machine.
- Ensure that the seat belt is attached and that you can release it quickly in an emergency.
- Always wear your seat belt.
- Check carefully for overhead obstructions and do not contact them.
- Keep the ROPS in safe operating condition by thoroughly inspecting it periodically for damage and keeping all the mounting fasteners tight.
- Replace all damaged ROPS components. Do not repair or alter them.

Machines with a Foldable Roll Bar

- Always use the seat belt with the roll bar in the raised position.
- The ROPS is an integral safety device. Keep a folding roll bar in the raised and locked position, and use the seat belt when operating the machine with the roll bar in the raised position.
- Lower a folding roll bar temporarily only when necessary. Do not wear the seat belt when the roll bar is folded down.
- Be aware that there is no rollover protection when a folded roll bar is in the down position.
- Check the area that you will be mowing and never fold down a folding roll bar in areas where there are slopes, drop-offs, or water.

Slope Safety

- Slopes are a major factor related to loss of control and rollover accidents, which can result in severe injury or death. You are responsible for safe slope operation. Operating the machine on any slope requires extra caution.
- Evaluate the site conditions to determine if the slope is safe for machine operation, including surveying the site. Always use common sense and good judgment when performing this survey.
- Review the slope instructions, listed below, for operating the machine on slopes. Before you operate the machine, review the site conditions to determine whether you can operate the machine in the conditions on that day and at that site. Changes in the terrain can result in a change in slope operation for the machine.
  - Avoid starting, stopping, or turning the machine on slopes. Avoid making sudden changes in speed or direction. Make turns slowly and gradually.
  - Do not operate a machine under any conditions where traction, steering, or stability is in question.
  - Remove or mark obstructions such as ditches, holes, ruts, bumps, rocks, or other hidden hazards. Tall grass can hide obstructions. Uneven terrain could overturn the machine.
  - Be aware that operating the machine on wet grass, across slopes, or downhill may cause the machine to lose traction.
  - Use extreme caution when operating the machine near drop-offs, ditches, embankments, water hazards, or other hazards. The machine could suddenly roll over if a wheel goes over the edge or the edge caves in. Establish a safety area between the machine and any hazard.
  - Identify hazards at the base of the slope. If there are hazards, mow the slope with a pedestrian-controlled machine.
  - If possible, keep the cutting units lowered to the ground while operating on slopes. Raising the cutting units while operating on slopes can cause the machine to become unstable.

Fuel Gauge

Use the fuel gauge (Figure 52) at the top of the tank to determine the fuel level.

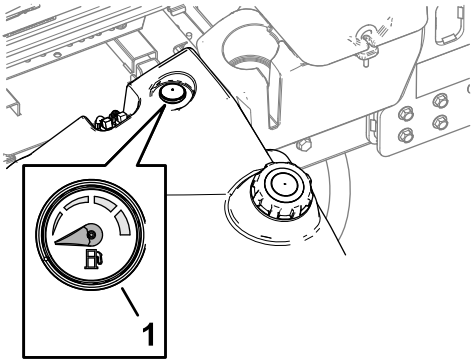

g368967

Figure 52

1. Fuel gauge

Using the Engine-Speed Switch

The engine-speed switch has 2 modes to change the engine speed.

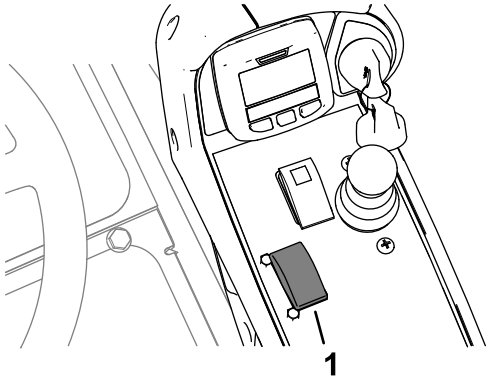

g370600

Figure 53

1. Engine-speed switch

- Momentarily tapping the switch increases or decreases the engine speed in 100-rpm increments.
- Pressing and holding the switch down moves the engine speed directly to high or low idle, depending on which side of the switch you press.

Starting the Engine

Important: **Bleed the fuel system if any of the following situations have occurred:**

- The engine has shut off because the machine ran out of fuel.
- Maintenance was performed on the fuel system components.

1. Sit in the operator's seat, engage the parking brake, and ensure that your foot is off the traction pedal.
2. Press the engine-speed switch to the LOW IDLE position.
3. Turn the key to the RUN position.

   Note: The glow-plug indicator displays in the InfoCenter.
4. When the glow indicator shuts off, turn the key to the START position.

   Important: **Do not run the starter motor more than 15 seconds at a time, or premature starter failure may result. If the engine fails to start after 15 seconds, turn the key to the OFF position, check the controls and procedures, wait 15 additional seconds, and repeat the starting procedure.**

   When the temperature is less than -7°C (20°F), the starter motor can be run for 30 seconds on then 60 seconds off for 2 attempts.
5. When the engine starts, release the key.
6. Adjust the engine speed.

Shutting Off the Engine

1. Park the machine on a level surface.
2. Press the PTO switch to the DISENGAGE position.
3. Press the engine-speed switch to the LOW IDLE position.
4. Engage the parking brake.
5. Lower the cutting units.

   Important: **Lowering the cutting units relieves the hydraulic load from the system, prevents wear on system parts, and prevents accidental lowering of the cutting units.**
6. If the machine was run at full-load operation, allow the engine to idle for 5 minutes.

   Important: **Idling the engine for 5 minutes allows the turbocharger to cool down before shutting off the engine. Failure to do so may lead to turbocharger damage.**
7. Rotate the key to OFF and remove the key.

8. Wait for all moving parts to stop.

Locking the Cutting-Unit Pivot

Cutting Grass on a Hill Side

Lock the cutting-unit pivots to prevent the cutting units from rotating downhill when cutting across the face of a hill.

1. Secure the carrier frame of the cutting unit to the pivot yoke with the snapper pin as shown in Figure 54.

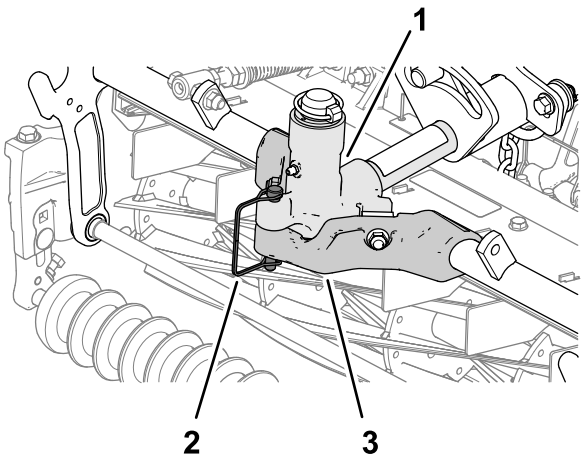

g368742

Figure 54

1. Pivot yoke
2. Snapper pin
3. Carrier frame (cutting unit)

2. Repeat step 1 at the other cutting units.

Cutting Grass with the Machine

1. Drive the machine to the job site and align the machine outside the cutting area for the first cutting pass.
2. Ensure that the PTO switch is set to the DISENGAGE position (Figure 55).

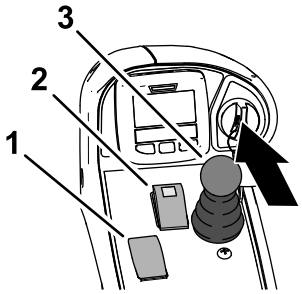

g370798

Figure 55

1. Engine-speed switch
2. PTO switch
3. Mow/raise control lever

3. Use your foot to move the lever for the mow-speed limiter forward, to the MOW position (Figure 56).

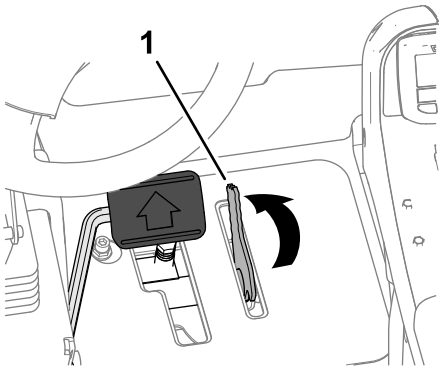

g370797

Figure 56

1. Mow-speed limiter

4. Press the throttle-speed switch to set the engine speed to HIGH IDLE.
5. Press the PTO switch to the ENGAGE position.
6. Begin driving the machine into the cutting area, and move the lower mow/raise control lever forward.

   Note: The cutting units start running as they lower. The front cutting units are timed to lower before the rear cutting units

   Note: Cutting grass at a rate that loads the engine promotes DPF regeneration.
7. When you complete the mowing pass, move the lever for the mow-speed limiter backward to lift the cutting units.
8. Perform a tear-shaped turn to quickly line up for your next pass.

Driving the Machine in Transport Mode

1. Press the PTO switch to the DISENGAGE position (Figure 57).

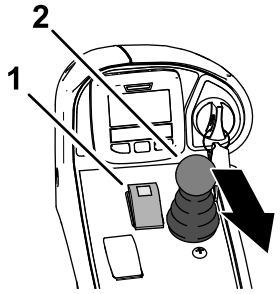

g370799

Figure 57

1. PTO switch
2. Mow/raise control lever

2. Move the lower mow/raise control lever rearward to raise the cutting units (transport position).
3. Move the lever for the mow-speed limiter rearward to the TRANSPORT position (Figure 58).

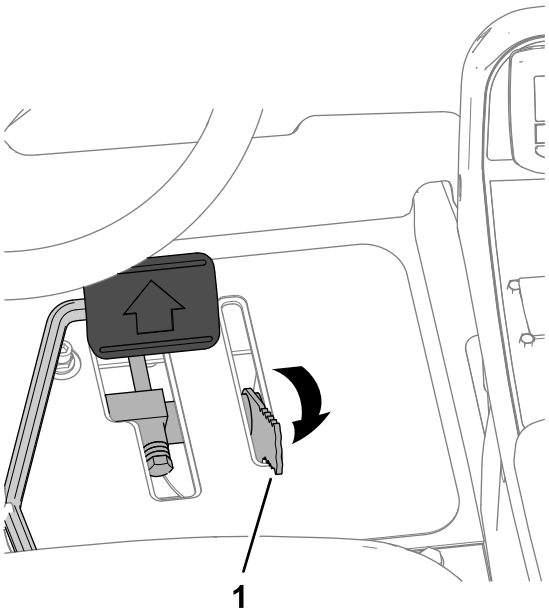

g370687

Figure 58

1. Mow-speed limiter

4. Press the traction pedal to drive the machine.

   Important: **Be careful when driving between objects so that you do not accidentally damage the machine or cutting units. Use extra care when operating the machine on slopes. Drive slowly and avoid sharp turns on slopes to prevent a rollover.**

Adjusting the Turf-Compensation Spring

The turf-compensation spring (Figure 59) transfers the weight from the front roller to the rear roller. This helps to reduce a wave pattern in the turf, also known as marcelling or bobbing.

Important: **Make spring adjustments with the cutting unit mounted to the traction unit, pointing straight ahead, and lowered to the shop floor.**

1. Make sure that the hairpin is installed in the rear hole in the spring rod (Figure 59).

   Note: When servicing the cutting unit, move the hairpin to the spring-rod hole next to the turf-compensation spring.

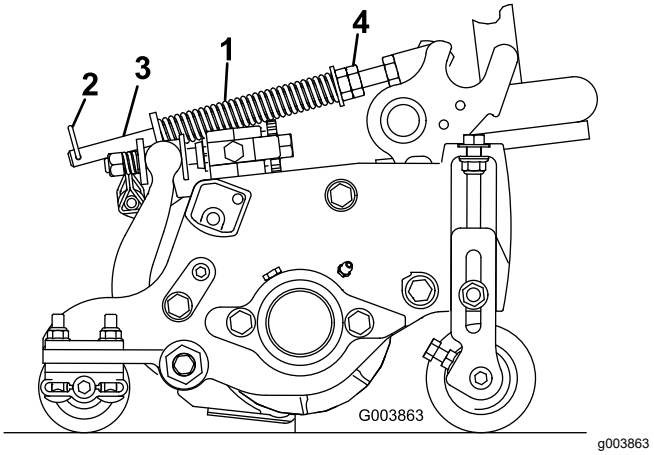

g003863

Figure 59

1. Turf-compensation spring
2. Hairpin
3. Spring rod
4. Hex nuts

2. Tighten the hex nuts on the front end of the spring rod until the compressed length of the spring is 15.9 cm (6.25 inches); refer to Figure 59.

   Note: When operating on rough terrain decrease the spring length by 13 mm (1/2 inch). Ground following will be slightly decreased.

   Note: The turf compensation setting will need to be reset if the HOC setting or the Aggressiveness of Cut setting is changed.

Adjusting the Cutting-Unit Counterbalance

Rear Cutting Units

⚠ CAUTION

The springs are under tension and could cause personal injury.

Use caution when adjusting the springs.

You can adjust the amount of counterbalance force applied to the rear cutting-units to help compensate for different turf conditions, and to maintain a uniform height of cut in rough conditions or in areas of thatch buildup.

You adjust counterbalance force of each torsion spring to 1 of 4 settings. Each increment increases or decreases the counterbalance force on the cutting unit by 2.3 kg (5 lb).

Note: To remove all counterbalance force, position the long leg of the torsion spring below the capscrew, washer, spacer, and locknut.

1. Park the machine on a level surface, lower the cutting units, engage the parking brake, shut off the engine, and remove the key.
2. Insert a tube or similar object over the long leg of the spring, and lift the spring leg to relieve pressure on the spacer (Figure 60).

   Note: Have another person help by lifting and lowering the spring leg.

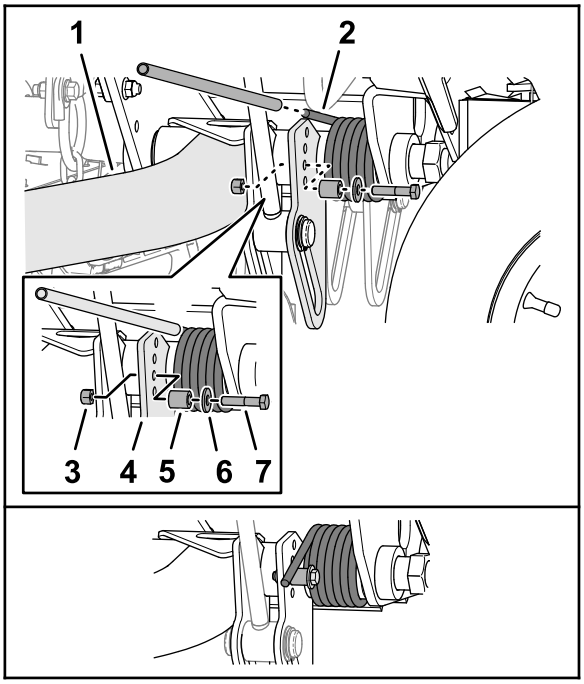

g370761

Figure 60

1. Lift arm (rear—cutting unit #2 or #3)
2. Torsion spring
3. Locknut
4. Lift-arm plate
5. Spacer
6. Washer
7. Capscrew

3. While holding the spring, remove the bolt, washer, and locknut from the lift plate (Figure 60).
4. Align the spring leg above the desired hole location.
5. Install the capscrew, washer, spacer, and locknut at the hole location.
6. Slowly lower the spring leg onto the spacer.
7. Repeat the steps through 5 at the rear cutting unit-lift arm.

Adjusting the Cutting Unit-Turnaround Height

The lift-arm switch (Figure 48) is located behind the right, front lift arm (cutting unit #5).

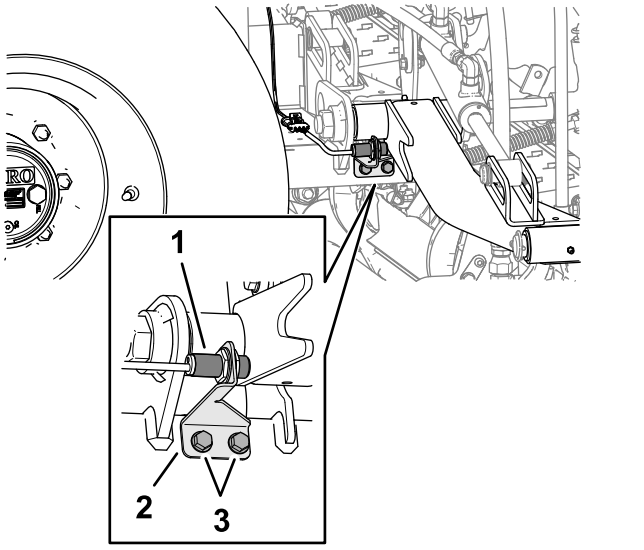

Figure 61

1. Lift-arm switch
2. Switch bracket (slotted)
3. Flange-head screw

1. Park the machine on a level surface, lower the cutting units, engage the parking brake, shut off the engine, and remove the key.
2. Loosen the 2 flange-head screws that secure the switch bracket to the carrier frame for the front cutting unit-lift arms.
3. Move the switch bracket as follows:
   - To increase the cutting unit-turnaround height, move the bracket up.
   - To decrease the cutting unit-turnaround height, move the bracket down.
4. Tighten the 2 flange-head screws.

Folding the Roll Bar

- Keep all nuts, bolts, and screws correctly torqued ensure that the equipment is in safe working condition.
- Replace worn or damaged parts for safety.
- Ensure that the seat belt and mountings are in safe working order.
- Wear the seat belt when the roll bar is raised and no seat belt when the roll bar is lowered.

You can fold the roll bar down to allow access into areas with restricted height.

⚠ WARNING

The machine does not have a rollover protection system (ROPS) when the roll bar is folded down and should not be considered a ROPS.

Do not wear a seatbelt when the roll bar is lowered.

⚠ WARNING

When lowering and raising the roll bar, your fingers may get pinched between the machine and the roll bar.

Use caution when lowering and raising the roll bar to prevent your fingers from getting pinched between the machine and the roll bar.

⚠ WARNING

The roll bar is an integral safety device. It does not protect you from injury or even death from a rollover unless it is secured in the raised position and you are wearing the seat belt.

- **Keep the roll bar in the raise position whenever you operate the machine.**
- **Lower the roll bar temporarily only when necessary, then secure it in the raised position as soon as possible before continuing operation.**

Important: **The roll bar is an integral safety device. Keep the roll bar in the raised position when operating the mower. Lower the roll bar temporarily only when absolutely necessary.**

1. Park the machine on a level surface, lower the cutting units, engage the parking brake, shut off the engine, and remove the key.
2. Remove the lynch pins that secure the roll-bar pins at each side of the roll bar (Figure 62).

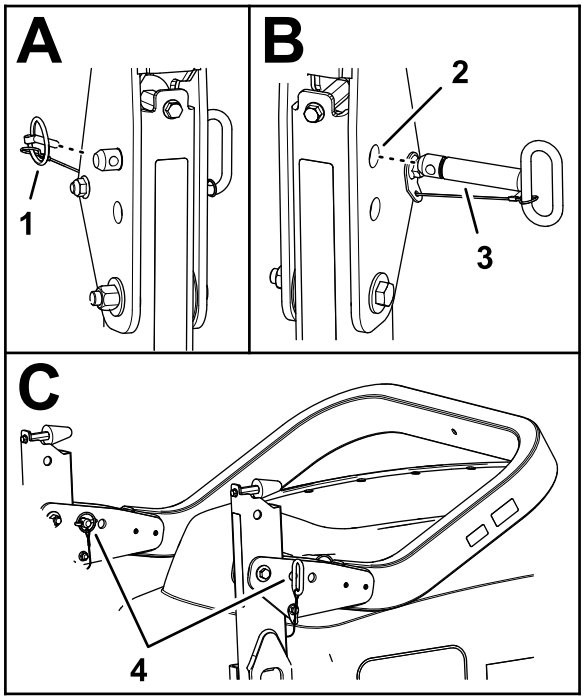

g368910

Figure 62

1. Lynch pin
2. Upper holes (pivot brackets)
3. Roll-bar pin
4. Roll-bar and lynch pins (lower holes—pivot brackets)

3. Support the weight of the upper roll-bar tube while removing roll-bar pins from the pivot brackets.
4. Carefully lower the upper roll-bar tube until it rests on the stops.
5. Insert the roll-bar pins into the lower holes in the pivot brackets, and secure the roll-bar pins to the brackets with the lynch pins.

Raising the Rollbar

⚠ WARNING

The ROPS protection system may not be effective if the roll-bar pins are loose, which may cause serious injury or even death in the event of a rollover.

When the roll bar is in the raised position, you must install both roll-bar pins and both lynch pins to ensure full ROPS protection.

1. Park the machine on a level surface, lower the cutting units, engage the parking brake, shut off the engine, and remove the key.
2. Remove the lynch pins that secure the roll-bar pins at each side of the roll bar (Figure 63).

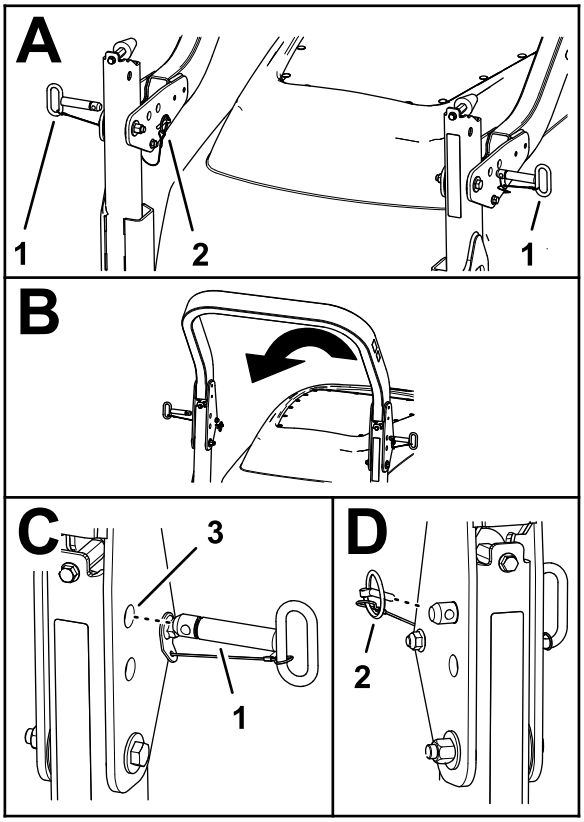

g368924

Figure 63

1. Roll-bar pin
2. Lynch pin
3. Upper holes (pivot brackets)

3. Removing roll-bar pins from the pivot brackets.
4. Carefully lift the upper roll-bar tube until the holes in the pivot bracket align with the holes in the lower roll-bar tube.
5. Insert the roll-bar pins into the holes in the pivot bracket and lower roll-bar tube.
6. Secure the roll-bar pins to the brackets and lower roll-bar tubes with the lynch pins.

Diesel Particulate Filter Regeneration

The diesel particulate filter (DPF) is part of the exhaust system. The diesel-oxidation catalyst of the DPF reduces harmful gasses and the soot filter removes soot from the engine exhaust.

The DPF regeneration process uses heat from the engine exhaust to incinerate the soot accumulated on the soot filter, converting the soot to ash, and clears the channels of the soot filter so that filtered engine exhaust flows out the DPF.

The engine computer monitors the accumulation of soot by measuring the back pressure in the DPF. If

the back pressure is too high, soot is not incinerating in the soot filter through normal engine operation. To keep the DPF clear of soot, remember the following:

- Passive regeneration occurs continuously while the engine is running—run the engine at full engine speed when possible, to promote DPF regeneration.
- If the back pressure in the DPF is too high or a reset regeneration has not occurred for 100 hours, the engine computer signals you through the InfoCenter when reset regeneration is running.
- Allow the reset regeneration process to complete before shutting off the engine.

Operate and maintain your machine with the function of the DPF in mind. Engine load at high idle (full throttle) engine speed generally produces adequate exhaust temperature for DPF regeneration.

Important: **Minimize the amount of time that you idle the engine or operate the engine at low-engine speed to help reduce the accumulation of soot in the soot filter.**

DPF Soot Accumulation

- Over time, the diesel particulate filter accumulates soot in the soot filter. The computer for the engine monitors the soot level in the DPF.
- When enough soot accumulates, the computer informs you that it is time to regenerate the DPF.
- DPF regeneration is a process that heats the DPF to convert the soot to ash.
- In addition to the warning messages, the computer reduces the power produced by the engine at different soot-accumulation levels.

Engine Warning Messages—Soot Accumulation

Indication Level	Fault Code	Engine Power Rating	Recommended Action
Level 1: Engine Warning	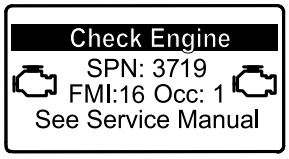 g213866 **Figure 64** Check Engine SPN 3719, FMI 16	The computer de-rates the engine power to 85%.	Perform a parked regeneration as soon as possible; refer to Parked or Recovery Regeneration (page 48).
Level 2: Engine Warning	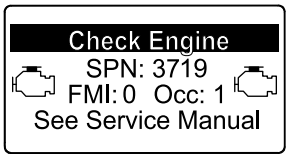 g213867 **Figure 65** Check Engine SPN 3719, FMI 0	The computer de-rates the engine power to 50%.	Perform a recovery regeneration as soon as possible; refer to Parked or Recovery Regeneration (page 48).

DPF Ash Accumulation

- The lighter ash is discharged through the exhaust system; the heavier ash collects in the soot filter.
- Ash is a residue of the regeneration process. Over time, the diesel particulate filter accumulates ash that does not discharge with the engine exhaust.
- The computer for the engine calculates the amount of ash accumulated in the DPF.
- When enough ash accumulates, the engine computer sends information to the InfoCenter in the form of an engine fault to indicate the accumulation of ash in the DPF.
- The fault messages indicate that it is time to service the DPF.
- In addition to the warnings, the computer reduces the power produced by the engine at different ash-accumulation levels.

InfoCenter Advisory and Engine Warning Messages—Ash Accumulation

Indication Level	Fault Code	Engine Speed Reduction	Engine Power Rating	Recommended Action
Level 1: Engine Warning	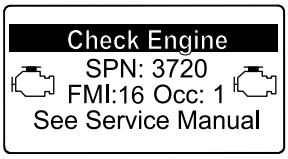 g213863 **Figure 66** Check Engine SPN 3720, FMI 16	None	The computer de-rates the engine power to 85%.	Service the DPF; refer to Servicing the Diesel-Oxidation Catalyst (DOC) and the Soot Filter (page 67)
Level 2: Engine Warning	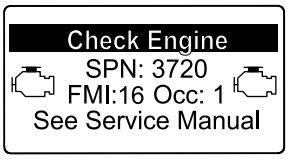 g213863 **Figure 67** Check Engine SPN 3720, FMI 16	None	The computer de-rates the engine power to 50%.	Service the DPF; refer to Servicing the Diesel-Oxidation Catalyst (DOC) and the Soot Filter (page 67)
Level 3: Engine Warning	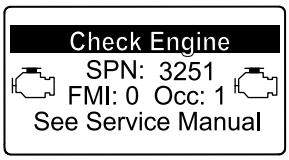 g214715 **Figure 68** Check Engine SPN 3251, FMI 0	Engine speed at maximum torque + 200 rpm	The computer de-rates the engine power to 50%.	Service the DPF; refer to Servicing the Diesel-Oxidation Catalyst (DOC) and the Soot Filter (page 67)

Types of Diesel Particulate Filter Regeneration

Types of diesel particulate filter regeneration that are performed while the machine is operating:

Type of Regeneration	Conditions that cause DPF regeneration	DPF description of operation
Passive	Occurs during normal operation of the machine at high-engine speed or high-engine load	• The InfoCenter does not display an icon indicating passive regeneration. • During passive regeneration, the DPF processes high-heat exhaust gasses, oxidizing harmful emissions, and burning soot to ash. Refer to Passive DPF Regeneration (page 45).
Assist	Occurs because of low-engine speed, low-engine load, or after the computer detects the DPF is becoming obstructed with soot	• The InfoCenter does not display an icon indicating assist regeneration. • During assist regeneration, the engine computer adjusts the engine settings to raise the exhaust temperature. Refer to Assist DPF Regeneration (page 46).
Reset	Occurs every 100 hours Also occurs after assist regeneration only if the computer detects that assist regeneration did not sufficiently reduce the soot level	• When the high exhaust-temperature icon  is displayed in the InfoCenter, a regeneration is in progress. • During reset regeneration, the engine computer adjusts the engine settings to raise the exhaust temperature. Refer to Reset Regeneration (page 46).

Types of diesel particulate filter regeneration that require you to park the machine:

Type of Regeneration	Conditions that cause DPF regeneration	DPF description of operation
Parked	Occurs because the computer detects back pressure in the DPF due to soot buildup Also occurs because the operator initiates a parked regeneration May occur because you set the InfoCenter to inhibit reset regeneration and continued operating the machine, adding more soot when the DPF already needs a reset regeneration May result from using the incorrect fuel or engine oil	• When the reset-standby/parked or recovery regeneration icon  or ADVISORY #188 displays in the InfoCenter, a regeneration is requested. • Perform the parked regeneration as soon as possible to avoid needing a recovery regeneration. • A parked regeneration requires 30 to 60 minutes to complete. • You must have at least a 1/4 tank of fuel in the tank. • You must park the machine to perform a parked regeneration. Refer to Parked or Recovery Regeneration (page 48).

Types of diesel particulate filter regeneration that require you to park the machine: (cont'd.)

Type of Regeneration	Conditions that cause DPF regeneration	DPF description of operation
Recovery	Occurs because the operator ignored requests for a parked regeneration and continued operating the machine, adding more soot to the DPF	• When the reset-standby/parked or recovery regeneration icon 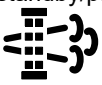 or ADVISORY #190 displays in the InfoCenter, a recovery regeneration is requested. • A recovery regeneration requires up to 3 hours to complete. • You must have at least a 1/2 tank of fuel in the machine. • You must park the machine to perform a recovery regeneration. Refer to Parked or Recovery Regeneration (page 48).

Accessing the DPF Regeneration Menus

Accessing the DPF Regeneration Menus

1. Access the Service menu, press the center button to scroll down to the DPF REGENERATION option (Figure 69).

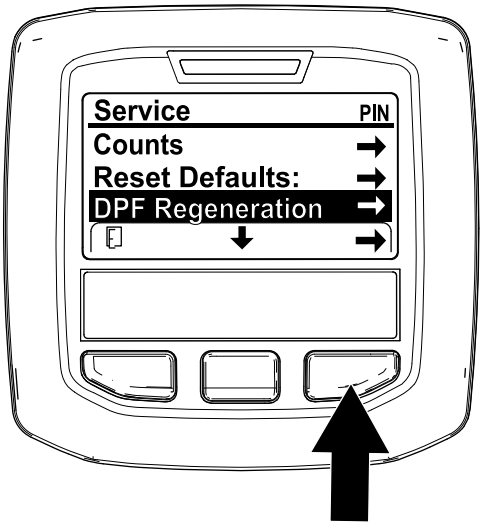

g227667

Figure 69

2. Press the right button to select the DPF Regeneration entry (Figure 69).

Time Since Last Regeneration

Access the DPF Regeneration menu, press the center button to scroll down to the LAST REGEN field (Figure 70).

Use the LAST REGEN field to determine how many hours you have run the engine since the last reset, parked, or recovery regeneration.

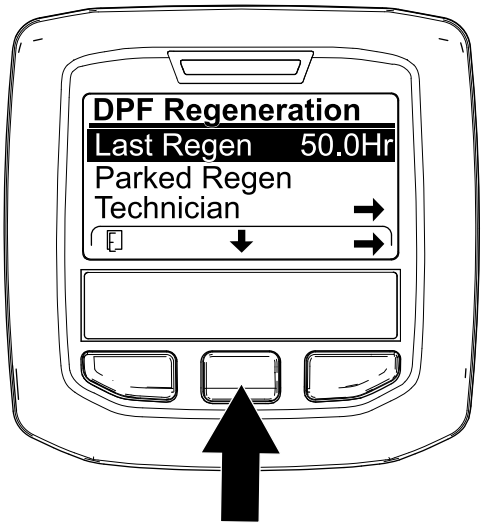

g224693

Figure 70

Technician Menu

Important: **For operating convenience, you may decide to perform a parked regeneration before the soot load reaches 100%, provided the engine has run more than 50 hours since the last successful reset, parked, or recovery regeneration.**

Use the technician menu to view the current state of engine regeneration control and view the reported soot level.

Access the DPF Regeneration menu, press the center button to scroll down to the TECHNICIAN option, and

press the right button to select the Technician entry (Figure 71).

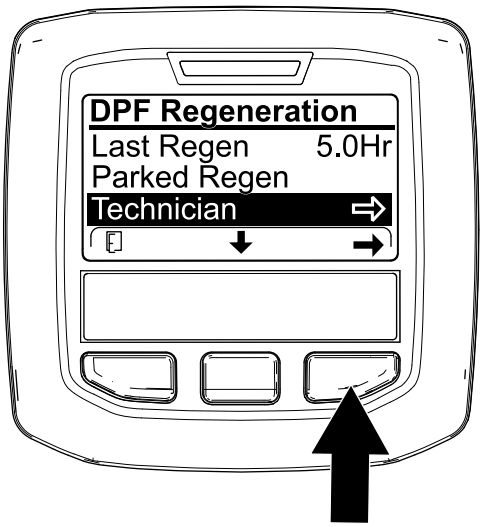

g227348

Figure 71

- Use the DPF operation table to understand the current state of DPF operation (Figure 72).

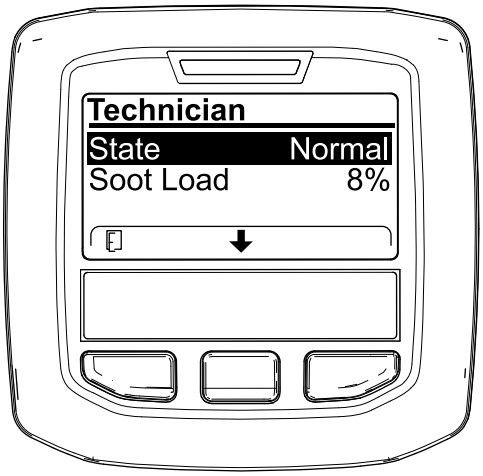

g227360

Figure 72

.

DPF Operation Table

State	Description	
Normal	The DPF is in normal-operating mode—passive regeneration.	
Assist Regen	The engine computer is performing an assist regeneration.	
Reset Stby	The engine computer is trying to run a reset regeneration, but 1 of the following conditions prevent regeneration:	The regen inhibit setting is set to ON.
		The exhaust temperature is too low for regeneration.

DPF Operation Table (cont'd.)

State	Description
Reset Regen	The engine computer is running a reset regeneration.
Parked Stby	The engine computer is requesting that you run a parked regeneration.
Parked Regen	You initiated a parked regeneration request and the engine computer is processing the regeneration.
Recov. Stby	The engine computer is requesting that you run a recovery regeneration.
Recov. Regen	You initiated a recovery regeneration request and the engine computer is processing the regeneration.

- View the soot load which is measured as the percentage of soot in the DPF(Figure 73); refer to the soot-load table.

  Note: The soot load value varies as the machine is operated and DPF regeneration occurs.

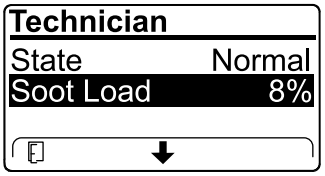

g227359

Figure 73

Soot-Load Table

Important Soot Load Values	Regeneration State
0% to 5%	Minimum soot load range
78%	The engine computer performs an assist regeneration.
100%	The engine computer automatically requests a parked regeneration.
122%	The engine computer automatically requests a recovery regeneration.

Passive DPF Regeneration

- Passive regeneration occurs as part of normal engine operation.
- While operating the machine, run the engine at full-engine speed and high load when possible, to promote DPF regeneration.

Assist DPF Regeneration

- The engine computer adjusts engine settings to raise the exhaust temperature.
- While operating the machine, run the engine at full engine speed and high load when possible, to promote DPF regeneration.

Reset Regeneration

⚠ CAUTION

The exhaust temperature is hot (approximately 600°C (1,112°F) during DPF regeneration. Hot exhaust gas can harm you or other people.

- **Never operate the engine in an enclosed area.**
- **Make sure that there are no flammable materials around the exhaust system.**
- **Never touch a hot exhaust system component.**
- **Never stand near or around the exhaust pipe of the machine.**

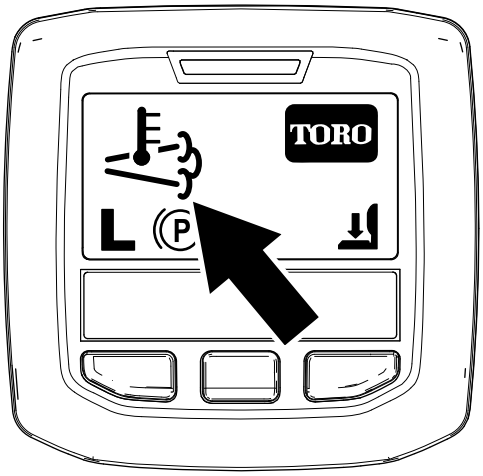

g224417

Figure 74

- The high exhaust-temperature icon  displays in the InfoCenter (Figure 74).
- The engine computer adjusts engine settings to raise the exhaust temperature.

  Important: **The high exhaust-temperature icon indicates that the exhaust temperature discharged from of your machine may be hotter than during regular operation.**
- While operating the machine, run the engine at full engine speed and high load when possible, to promote DPF regeneration.
- The icon displays in the InfoCenter while the reset regeneration is processing.
- Whenever possible, do not shut off the engine or reduce engine speed while the reset regeneration is processing.

  Important: **Whenever possible, allow the machine to complete the reset regeneration process before shutting off the engine.**

Periodic Reset Regeneration

If the engine has not completed a successful Reset, Parked, or Recovery regeneration in the previous 100 hours of engine operation, the engine computer will attempt to perform a reset regeneration.

Setting the Inhibit Regen

Reset Regeneration Only

Note: If you set the InfoCenter to inhibit regeneration, the InfoCenter displays ADVISORY #185 (Figure 75) every 15 minutes while the engine requests a reset regeneration.

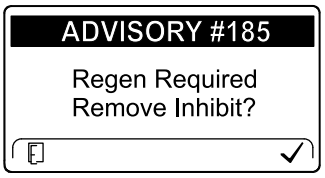

g224692

Figure 75

A reset regeneration produces the elevated engine exhaust. If you are operating the machine around trees, brush, tall grass, or other temperature-sensitive plants or materials, you can use the Inhibit Regen setting to prevent the engine computer from performing a reset regeneration.

Important: **When you shut off the engine and start it again, the inhibit regen setting defaults to OFF.**

1. Access the DPF Regeneration menu, press the center button to scroll down to the INHIBIT REGEN option, and press the right button to select the Inhibit Regen entry (Figure 76).

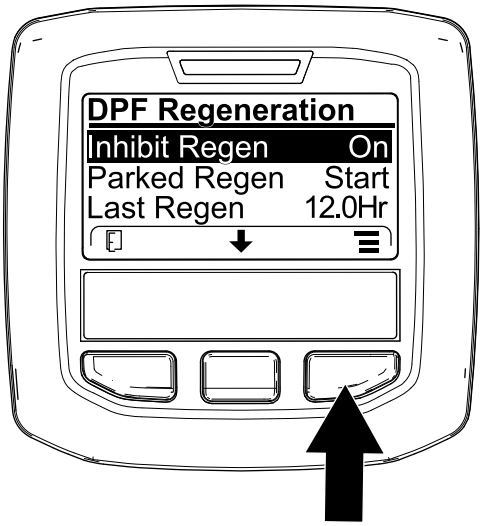

g227304

Figure 76

2. Press the right button to change the inhibit regeneration setting from On to Off (Figure 76) or from Off to On (Figure 77).

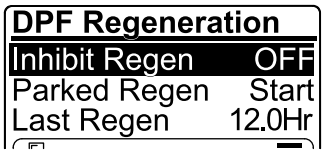

g224691

Figure 77

Allowing a Reset Regeneration

The InfoCenter displays the high exhaust-temperature icon when the reset regeneration is in process.

Note: If INHIBIT REGEN is set to ON, the InfoCenter displays ADVISORY #185 (Figure 78). Press button 3 to set inhibit regeneration setting to OFF and continue with the reset regeneration.

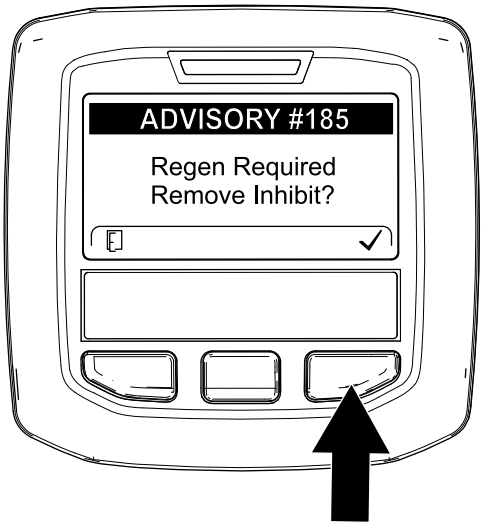

g224394

Figure 78

Note: If the engine exhaust temperature is too low, the InfoCenter displays ADVISORY #186 (Figure 79) to inform you to set the engine to full throttle (high idle).

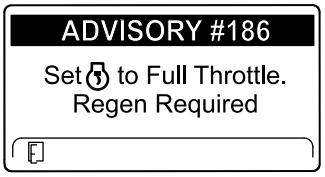

g224395

Figure 79

Note: When the reset regeneration completes, the high exhaust-temperature disappears from the InfoCenter screen.

Parked or Recovery Regeneration

- When the engine computer requests either a parked regeneration or a recovery regeneration, the regeneration request icon (Figure 80) displays in the InfoCenter.

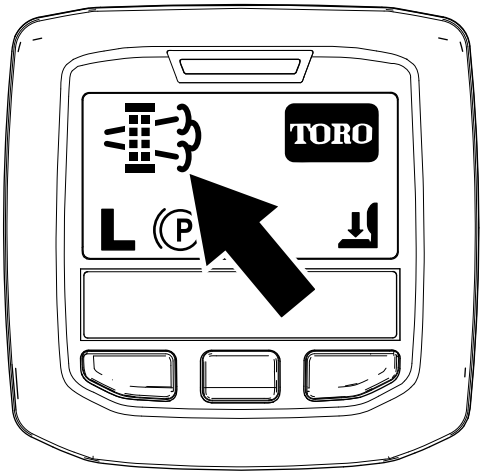

g224404

Figure 80

- The machine does not automatically perform a parked regeneration or a recovery regeneration, you must run the regeneration through the InfoCenter.

Parked Regeneration Messages

When a parked regeneration is requested by the engine computer the following messages display in the InfoCenter:

- Engine warning SPN 3720, FMI 16 (Figure 81)

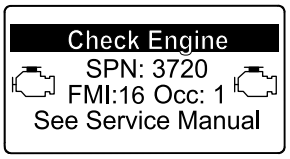

g213863

Figure 81

- Parked regeneration required ADVISORY #188 (Figure 82)

  Note: Advisory #188 displays every 15 minutes.

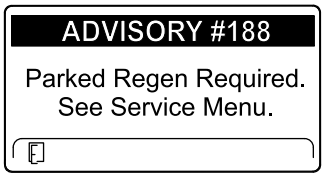

g224397

Figure 82

- If you do not perform a parked regeneration within 2 hours, the InfoCenter displays parked regeneration required—power takeoff disabled ADVISORY #189 (Figure 83).

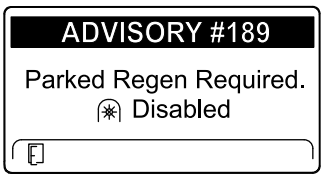

g224398

Figure 83

Important: **Perform a parked regeneration to restore the PTO function; refer to Preparing to Perform a Parked or Recovery Regeneration (page 49) and Performing a Parked or Recovery Regeneration (page 49).**

Note: The Home screen displays the PTO disabled Icon (Figure 84).

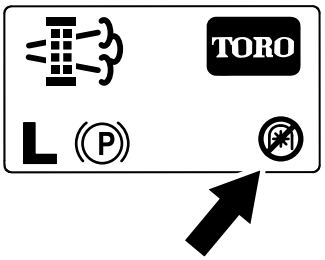

g224415

Figure 84

Recovery Regeneration Messages

When a recovery regeneration is requested by the engine computer, the following messages display in the InfoCenter:

- Engine warning SPN 3719, FMI 0 (Figure 85)

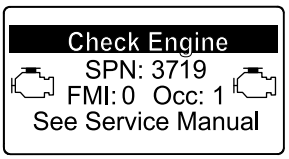

g213867

Figure 85

- Recovery regeneration required—power takeoff disabled ADVISORY #190 (Figure 86)

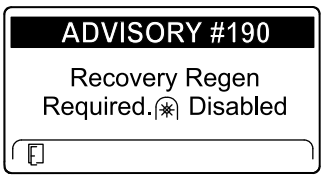

g224399

Figure 86

Important: **Perform a recovery regeneration to restore the PTO function; refer to Preparing to Perform a Parked or Recovery Regeneration (page 49) and Performing a Parked or Recovery Regeneration (page 49).**

Note: The Home screen displays the PTO disabled Icon; refer to Figure 84 in Parked Regeneration Messages (page 48).

DPF Status-Limitation

- If the engine computer requests a recovery regeneration or is processing a recovery regeneration and you scroll down to the PARKED REGEN option, parked regeneration locks and the lock icon (Figure 87) appears in the lower right corner of the InfoCenter.

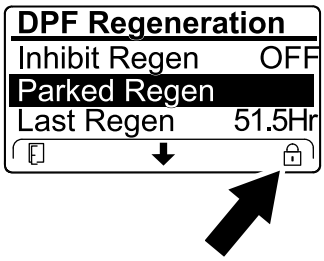

g224625

Figure 87

- If the engine computer has not requested a recovery regeneration and you scroll down to the RECOVERY REGEN option, the recovery regeneration locks and the lock icon (Figure 88) appears in the lower right corner of the InfoCenter.

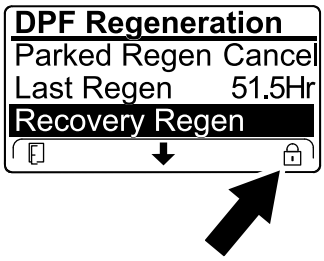

g224628

Figure 88

Preparing to Perform a Parked or Recovery Regeneration

1. Ensure that the machine has fuel in the tank for the type of regeneration you are performing:
   - **Parked Regeneration:** Ensure that you have 1/4 tank of fuel before performing the parked regeneration.
   - **Recovery Regeneration:** Ensure that you have 1/2 tank of fuel before performing the recovery regeneration.
2. Move the machine outside to an area away from combustible materials.
3. Park the machine on a level surface.
4. Ensure that the traction control or motion-control levers are in the NEUTRAL position.
5. If applicable, shut off the PTO, and lower the cutting units or accessories.
6. Engage the parking brake.
7. Set the throttle to the low IDLE position.

Performing a Parked or Recovery Regeneration

⚠ CAUTION

The exhaust temperature is hot (approximately 600°C (1,112°F) during DPF regeneration. Hot exhaust gas can harm you or other people.

- **Never operate the engine in an enclosed area.**
- **Make sure that there are no flammable materials around the exhaust system.**
- **Never touch a hot exhaust system component.**
- **Never stand near or around the exhaust pipe of the machine.**

Important: **The computer of the machine cancels DPF regeneration if you increase the engine speed from low idle or release the parking brake.**

1. Access the DPF Regeneration menu, press the center button to scroll down to either the PARKED REGEN START option or the RECOVERY REGEN START option (Figure 89), and press the right button to select the start the regeneration (Figure 89).

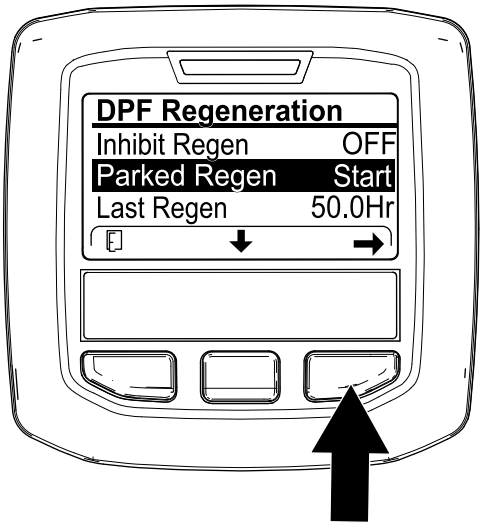

g224402

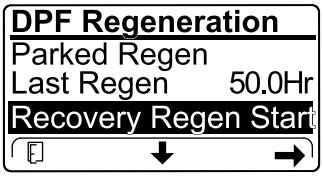

g224629

Figure 89

2. At the VERIFY FUEL LEVEL screen, verify that you have 1/4 tank of fuel if you are performing the parked regeneration or 1/2 tank of fuel if you are performing the recovery regeneration, and press the right button to continue (Figure 90).

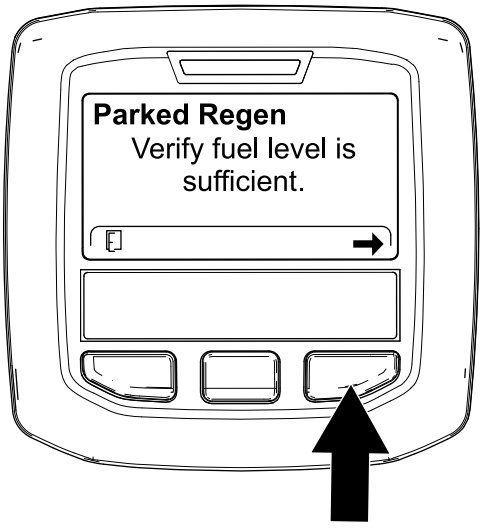

g224414

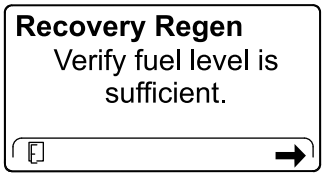

g227678

Figure 90

3. At the DPF checklist screen, verify that the parking brake is engaged and that the engine speed is set to low idle (Figure 91).

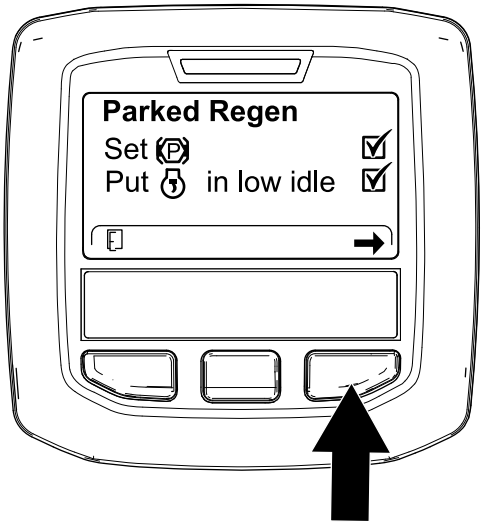

g224407

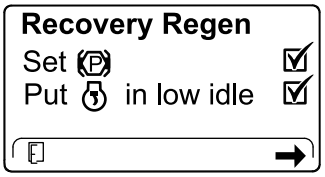

g227679

Figure 91

4. At the INITIATE DPF REGEN screen, press the right button to continue (Figure 92).

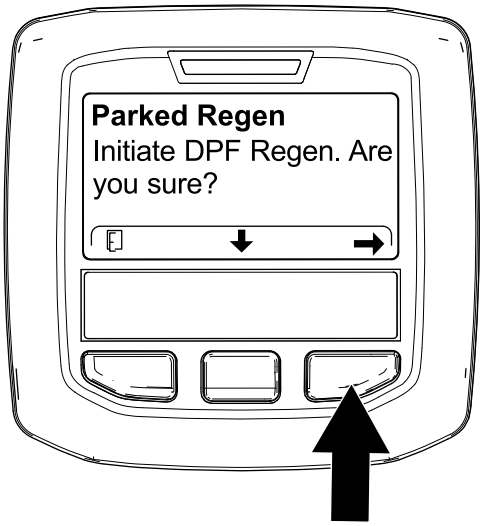

g224626

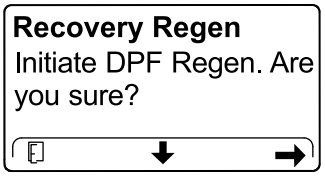

g224630

Figure 92

5. The InfoCenter displays the INITIATING DPF REGEN message (Figure 93).

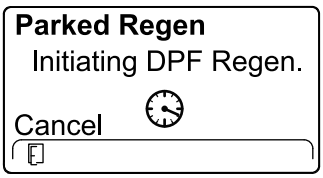

g224411

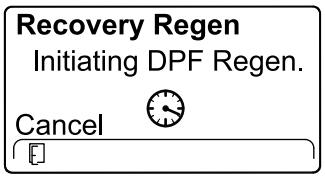

g227681

Figure 93

6. The InfoCenter displays the time to complete message (Figure 94).

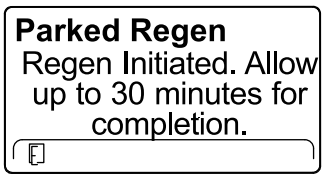

g224406

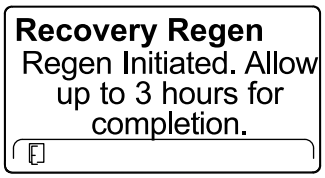

g224416

Figure 94

7. The engine computer checks the engine state and fault information. The InfoCenter may display the following messages found in the table that follows:

Check Message and Corrective Action Table

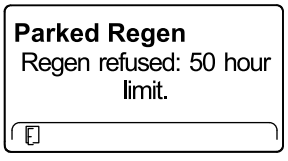

Corrective Action: Exit the regeneration menu and run the machine until the time since last regeneration is greater than 50 hours; refer to Time Since Last Regeneration (page 44).

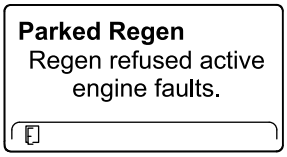

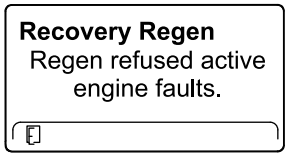

Corrective Action: Troubleshoot the engine fault and retry DPF regeneration.

Check Message and Corrective Action Table (cont'd.)

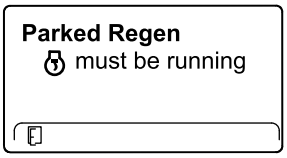

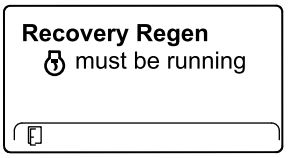

Corrective Action: Start and run the engine.

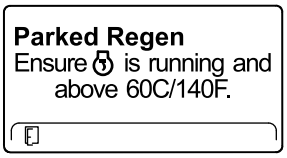

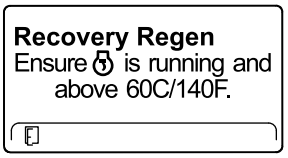

Corrective Action: Run the engine to warm the coolant temperature to 60°C (140°F).

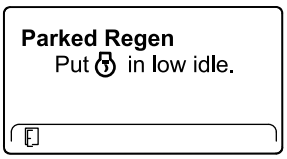

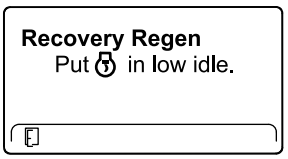

Corrective Action: Change the engine speed to low idle.

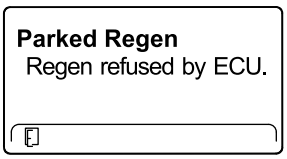

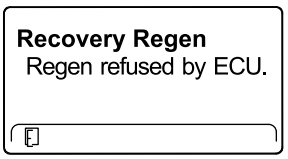

Corrective Action: Troubleshoot the engine computer condition and retry DPF regeneration.

8. The InfoCenter displays the home screen and the regeneration acknowledge icon (Figure 95) appears in the lower right corner of the screen as the regeneration processes.

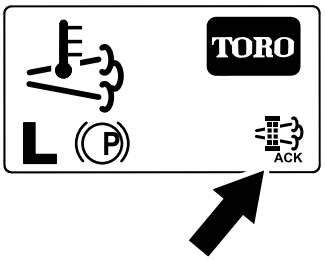

g224403

Figure 95

Note: While the DPF regeneration runs, the InfoCenter displays the high exhaust-temperature icon .

9. When the engine computer completes a parked or recovery regeneration, the InfoCenter

displays ADVISORY #183 (Figure 96). Press the left button to exit to the home screen.

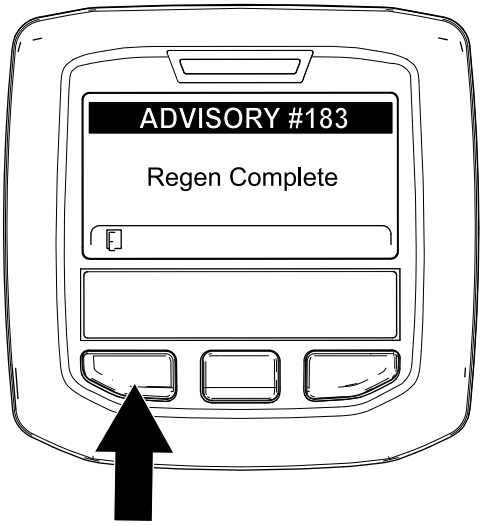

g224392

Figure 96

Note: If the regeneration fails to complete, the InfoCenter displays Advisory #184 (Figure 96). Press the left button to exit to the home screen.

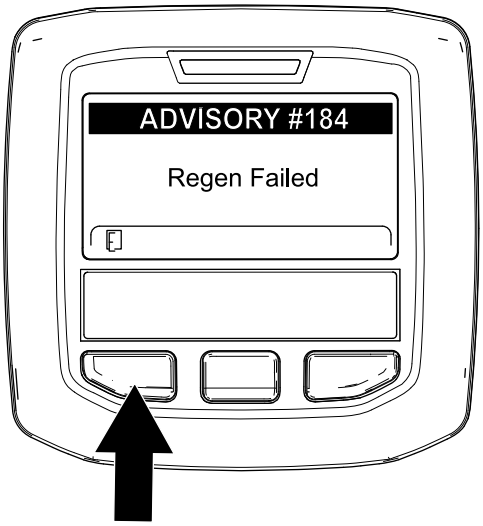

g224393

Figure 97

Canceling a Parked or Recovery Regeneration

Use the Parked Regen Cancel or Recovery Regen Cancel setting to cancel a running parked or recovery regeneration process.

1. Access the DPF Regeneration menu (Figure 98).

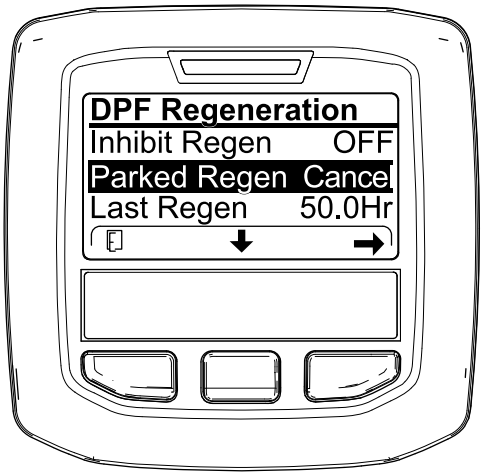

g227305

Figure 98

2. Press the center button to scroll down to the PARKED REGEN CANCEL (Figure 98) or the RECOVERY REGEN CANCEL option (Figure 99).

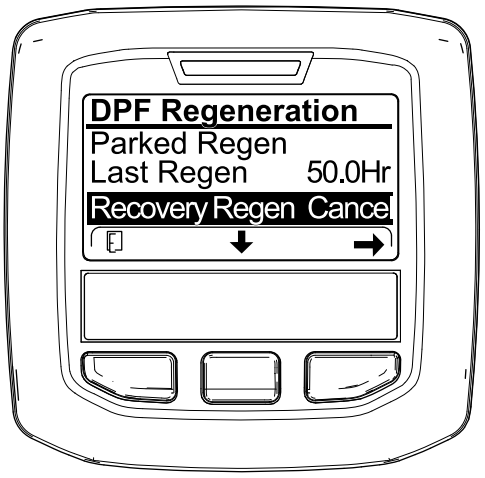

g227306

Figure 99

3. Press the right button to select the Regen Cancel entry (Figure 98 or Figure 99).

Operating Tips

Becoming Familiar with the Machine

Before mowing grass, practice operating the machine in an open area. Start and shut off the engine. Operate in forward and reverse. Lower and raise the cutting units and engage and disengage the reels. When you feel familiar with the machine, practice operating up and down slopes at different speeds.

Understanding the Warning System

If the InfoCenter displays an operator advisory or a fault code during operation, stop the machine immediately and correct the problem before continuing operation. Serious damage could occur if you operate the machine with a malfunction.

After Operation

After Operation Safety

General Safety

- Park the machine on a level surface.
- Disengage and lower the cutting units.
- Engage the parking brake.
- Shut off the engine and remove the key.
- Wait for all movement to stop.
- Allow the machine to cool before adjusting, servicing, cleaning, or storing it.
- To help prevent fires, ensure that the cutting units, drives, mufflers, cooling screens, and engine compartment are free from grass and debris buildup. Clean up oil or fuel spills.
- Disengage the drive to the attachment whenever you are hauling or not using the machine.
- Maintain and clean the seat belt(s) as necessary.
- Do not store the machine or fuel container where there is an open flame, spark, or pilot light, such as on a water heater or on other appliances.

Hauling the Machine

- Use full-width ramps for loading the machine onto a trailer or truck.
- Tie the machine down securely.

Identifying the Tie-Down Points

The tie-down points are in the following locations:

- On each side of the frame under the front steps
- The rear bumper

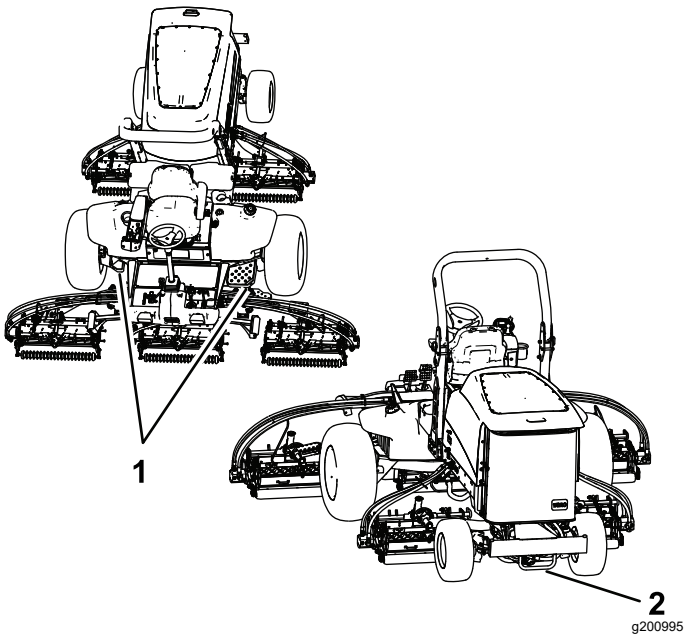

Figure 100

1. Front tie-down points
2. Rear tie-down point

Pushing or Towing the Machine

⚠ WARNING

While the tow bypass valve is open, the machine could unintentionally move, and injure you or bystanders.

When you are not pushing or towing the machine, engage the parking brake.

In an emergency, you can move the machine by opening tow bypass valve of the traction hydraulic pump, installing a hydraulic hose to bypass the check valve, and then pushing or towing the machine.

If you need to push or tow your machine, you may need to move it both forward and in reverse. To ensure that the drive system does not become damaged from pushing or towing, it is best to prepare the machine for both forward and reverse pushing or towing.

Preparing the Machine to Push or Tow in Reverse

Install the Reverse Tow Kit

Required Parts (purchased separately): Reverse Tow Kit, Toro Part No. 136-3620

Important: **If you need to push or tow the machine in reverse, you must first bypass the check valve in the 4-wheel-drive manifold.**

1. Park the machine on a level surface, engage the parking brake, lower the cutting units, shut off the engine and remove the key.
2. Loosely assemble the bypass hose and straight fittings of the reverse tow kit; refer to the *Reverse Tow Kit Installation Instructions*.
3. Remove the dust cap and the test fitting from the test port of the reverse traction tube.
4. Assemble the straight fitting of the bypass hose to the test port, and tighten the fitting and hose.
5. Remove the #6 hex-socket plug from the unmarked port (located between the fittings in port M8 and port P2) of the rear-traction manifold.
6. Assemble the other straight fitting of the bypass hose into the unmarked rear-traction manifold port, and tighten the fitting and hose.
7. Open the tow bypass valve of the traction pump by rotating it 90° (1/4 turn) in either direction (Figure 101).

   Note: Note the position of the valve when opening and closing it.

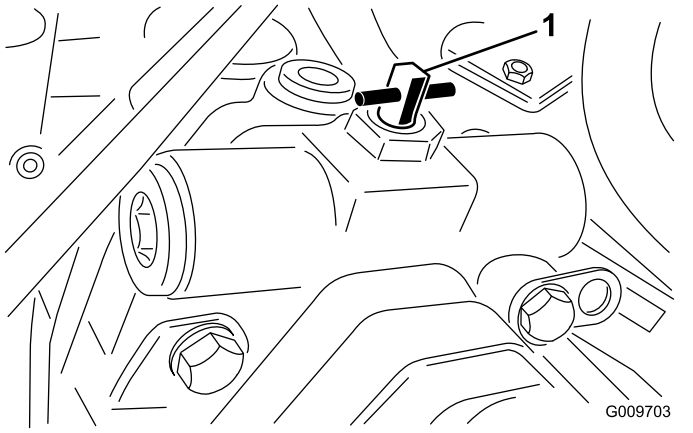

Figure 101

1. Tow bypass valve

8. Push or tow the machine.

   Important: **Do not push or tow the machine faster than 3 to 4.8 km/h (2 to 3 mph) or for more than 0.4 km (1/4 mile), because damage to the hydraulic system may occur. The bypass valve must be open whenever you push or tow the machine.**

Preparing the Machine for Operation

Remove the Reverse Tow Kit

1. Park the machine on a level surface, engage the parking brake, lower the cutting units, shut off the engine and remove the key.
2. Remove the straight fitting and bypass hose of the reverse tow kit from the test port of the reverse traction tube; refer to the *Reverse Tow Kit Installation Instructions*.
3. Install the test fitting and dust cap to the test port.
4. Remove the other straight fitting of the bypass hose from the unmarked (located between the fittings in port M8 and port P2) rear-traction manifold port.
5. Install the new #6 hex-socket plug from the Reverse Tow Kit into the unmarked port of the rear-traction manifold.
6. Close the tow bypass valve by rotating it back 90° (1/4 turn) before starting the engine. (Figure 102).

   Note: Do not exceed 7 to 11 N·m (5 to 8 ft-lb) torque to close the valve.

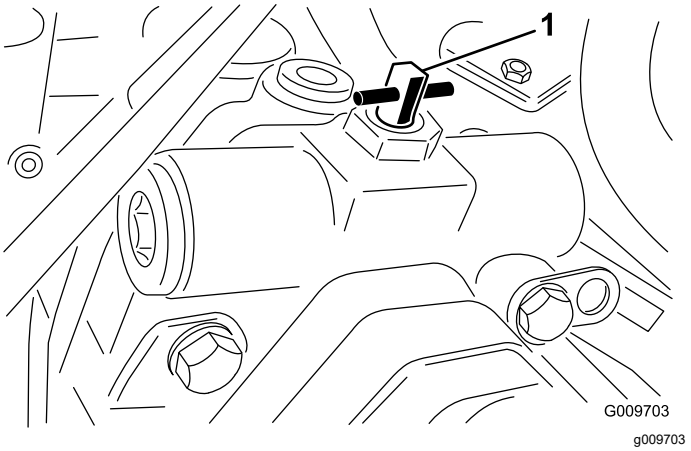

Figure 102

1. Tow bypass valve

Pushing or Towing the Machine Forward Only

If you need to push or tow the machine forward only, you can just rotate the bypass valve.

Important: **If you need to push or tow the machine in reverse, refer to Preparing the Machine to Push or Tow in Reverse (page 54).**

1. Open the hood and remove the center shroud.
2. Open the tow bypass valve of the traction pump by rotating it 90° (1/4 turn) in either direction (Figure 101).

   Note: Note the position of the valve when opening and closing it.

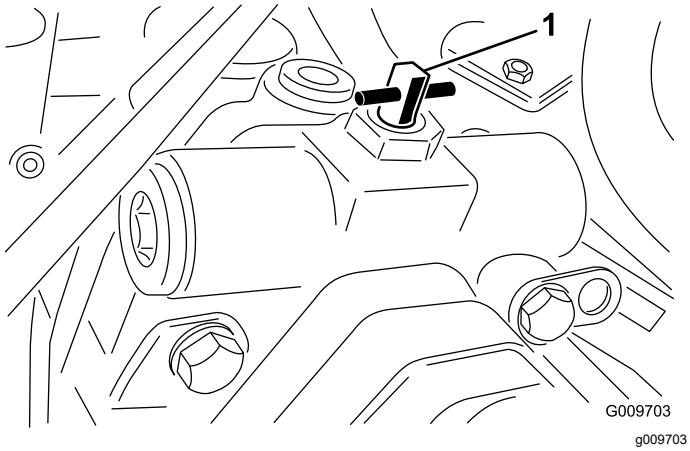

Figure 103

1. Tow bypass valve

3. Push or tow the machine forward only.

   Important: **Do not push or tow the machine faster than 3 to 4.8 km/h (2 to 3 mph) or for more than 0.4 km (1/4 mile), because damage to the hydraulic system may occur. The bypass valve must be open whenever you push or tow the machine.**
4. When the machine is ready for operation, close the tow bypass valve by rotating it back 90° (1/4 turn) before starting the engine.

   Note: Do not exceed 7 to 11 N·m (5 to 8 ft-lb) torque to close the valve.

Maintenance

Note: Determine the left and right sides of the machine from the normal operating position.

Note: Download a free copy of the electrical or hydraulic schematic by visiting www.Toro.com and searching for your machine from the Manuals link on the home page.

Important: **Refer to your engine owner's manual and cutting unit *Operator's Manual* for additional maintenance procedures.**

Maintenance Safety

- Before you leave the operator's position, do the following:
  - Park the machine on a level surface.
  - Disengage and lower the cutting units.
  - Engage the parking brake.
  - Shut off the engine and remove the key.
  - Wait for all movement to stop.
  - Allow the machine to cool before adjusting, servicing, cleaning, or storing it.
- Wear appropriate clothing, including eye-protection; long pants and substantial, slip-resistant footwear. Keep hands, feet, clothing, jewelry, and long hair away from moving parts.
- Allow machine components to cool before performing maintenance.
- If possible, do not perform maintenance while the engine is running. Keep away from moving parts.
- Operate the engine only in well-ventilated areas. Exhaust gases contain carbon monoxide, which is lethal if inhaled.
- Support the machine with jack stands whenever you work under the machine.
- Carefully release pressure from components with stored energy.
- Keep all parts of the machine in good working condition and all hardware tightened.
- Replace all worn or damaged decals.
- To ensure safe, optimal performance of the machine, use only genuine Toro replacement parts. Replacement parts made by other manufacturers could be dangerous, and such use could void the product warranty.

Recommended Maintenance Schedule(s)

Maintenance Service Interval	Maintenance Procedure
After the first 8 hours	• Torque the wheel nuts.
After the first 50 hours	• Change the front planetary-gear oil.
After the first 200 hours	• Change the oil in the rear axle.
Before each use or daily	• Inspect the seat belt(s) for wear, cuts, and other damage. Replace the seat belt(s) if any component does not operate properly. • Check the interlock switches. • Check the air filter • Check the engine-oil level. Add engine oil as needed. • Drain water or other contaminants from the water separator. • Check the tire air pressure. • Visually inspect the rear axle for leaks. • Visually inspect the reduction-gear case leaks. • Check the coolant level. • Remove debris from the engine area, oil cooler, and radiator. Clean them more frequently in dirty conditions. • Check the hydraulic lines and hoses. • Check the level of the hydraulic fluid.
Every 50 hours	• Grease the bearings and bushings. Grease the bearings and bushings immediately after washing the machine. • Service the battery.
Every 100 hours	• Check the condition and tension of the alternator belt.
Every 200 hours	• Torque the wheel nuts.

Maintenance Service Interval	Maintenance Procedure
Every 400 hours	• Change the air filter. Service the air filter earlier if the service indicator shows red. Service it more frequently in extremely dirty or dusty conditions. • Check the fuel lines and connections for deterioration, damage, or loose connections. • Change the fuel-water separator filter. • Change the engine-fuel filter. • Check for end-play in the planetary drives. • Check the planetary-gear-drive oil level (check if you notice external leakage). • Check the oil level of the rear axle. (Also check the oil level before you start the engine for the first time.) • Check the lubricant in the reduction-gear case. (Also check the lubricant before you first start the engine.)
Every 500 hours	• Change the engine oil and filter.
Every 800 hours	• Drain and clean the fuel tank. • Change the front planetary-gear oil or yearly, whichever comes first. • Change the oil in the rear axle. • Check the rear-wheel alignment. • If you are not using the recommended hydraulic fluid or have ever filled the reservoir with an alternative fluid, replace the hydraulic filters. • If you are not using the recommended hydraulic fluid or have ever filled the reservoir with an alternative fluid, change the hydraulic fluid.
Every 1,000 hours	• If you are using the recommended hydraulic fluid, replace the hydraulic filters.
Every 2,000 hours	• If you are using the recommended hydraulic fluid, change the hydraulic fluid.
Every 6,000 hours	• Disassemble, clean, and assemble the soot filter of the DPF or clean the soot filter if engine faults SPN 3251 FMI 0, SPN 3720 FMI 0, or SPN 3720 FMI 16 displays in the InfoCenter.
Before storage	• Drain and clean the fuel tank.
Every 2 years	• Replace the hydraulic hoses. • Replace the coolant hoses. • Flush and replace the coolant.

Daily Maintenance Checklist

Duplicate this page for routine use.

Maintenance Check Item	For the week of:						
	Mon.	Tues.	Wed.	Thurs.	Fri.	Sat.	Sun.
Check the safety interlock operation.							
Check the brake operation.							
Check the levels of the engine oil and fuel.							
Check the cooling-system fluid level.							
Drain the water/fuel separator.							
Check the air-filter service indicator.							
Check the radiator, oil cooler, and screen for debris.							
Check for unusual engine noises.[1]							
Check for unusual operating noises.							
Check the fluid level of the hydraulic system.							
Check the hydraulic hoses for damage.							
Check for fluid leaks.							
Check the tire pressure.							
Check the instrument operation.							
Check the reel-to-bedknife adjustment.							
Check the height-of-cut adjustment.							
Lubricate all grease fittings.[2]							
Touch-up damaged paint.							

1. Check the glow plug and injector nozzles if the engine starts hard, produces excess smoke, or runs rough.
2. Immediately after every washing, regardless of the interval listed

Notation for Areas of Concern

Inspection performed by:		
Item	**Date**	**Information**
1		
2		
3		
4		
5		
6		
7		
8		

Pre-Maintenance Procedures

Preparing for Maintenance

1. Park the machine on a level surface, lower the cutting units, and engage the parking brake.
2. Shut off the engine, remove the key, and wait for all moving parts to stop.

Opening the Hood

1. Release the 2 hood latches (Figure 104).

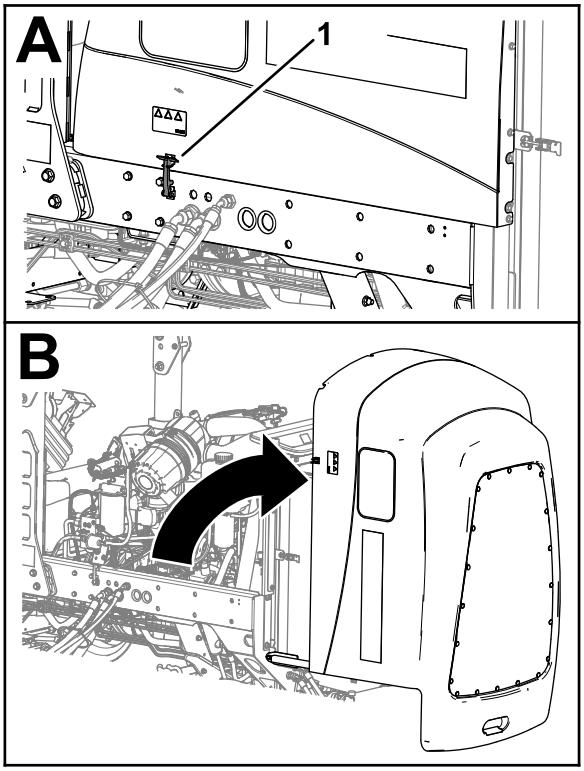

g369009

Figure 104

1. Hood latch (2)

2. Use the handle at the back of the hood to rotate open the hood.

Closing the Hood

1. Carefully rotate the hood closed (Figure 105).

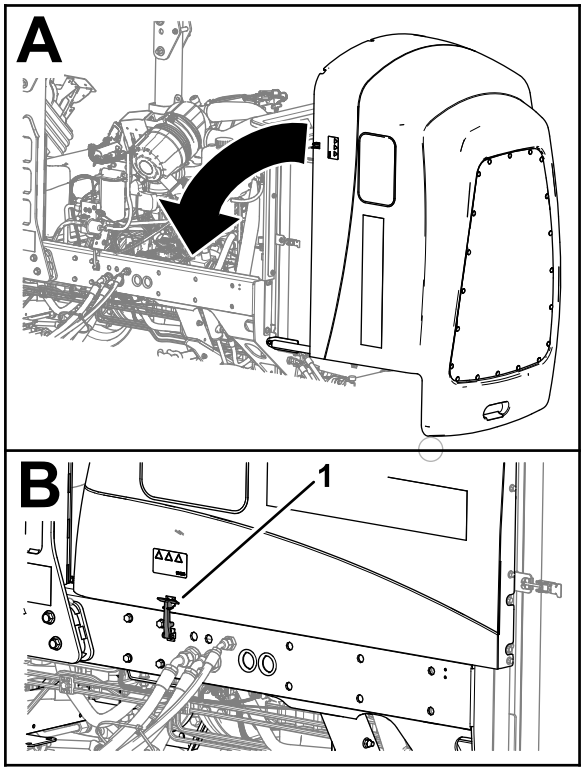

g369219

Figure 105

1. Hood latch (2)

2. Secure the hood with the 2 hood latches.

Accessing the Battery Compartment

1. Release the rubber latch from the battery-compartment cover (Figure 104).

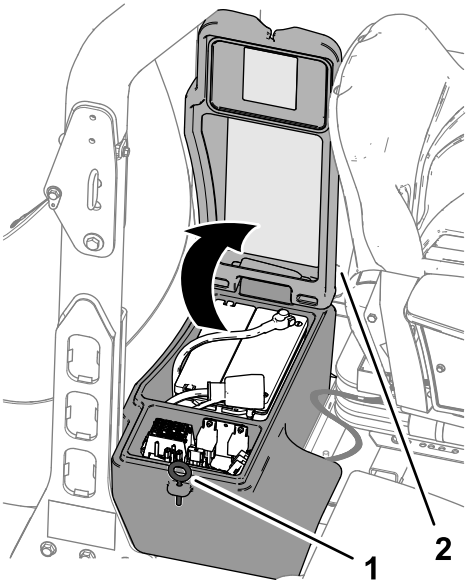

g369006

Figure 106

1. Battery-compartment cover
2. Latch (rubber)

2. Rotate the cover up.

Tilting the Seat

1. Move the seat latch outward (Figure 107).

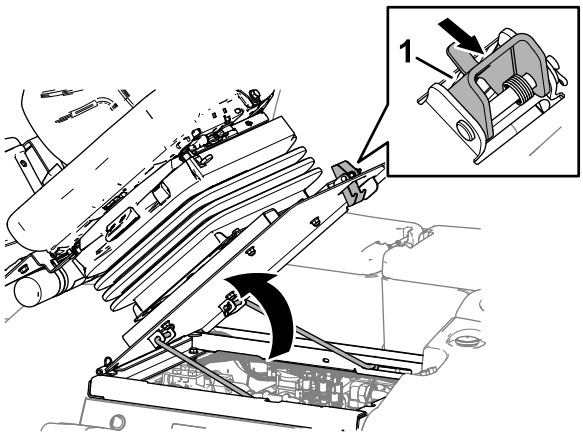

g369007

Figure 107

1. Seat latch

2. Carefully rotate the seat up.
3. Ensure that the forward prop rod seats in the slot detent of the seat support (Figure 108).

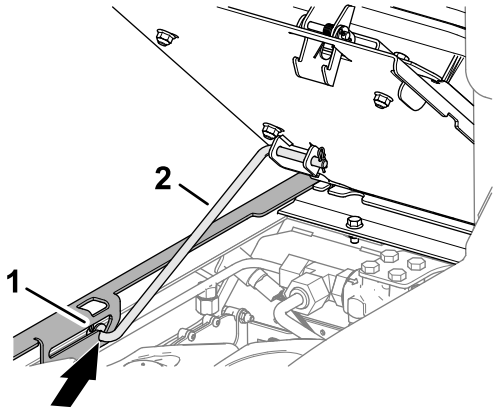

g369008

Figure 108

1. Slot (seat support)
2. Prop rod

Lowering the Seat

1. Rotate the seat slightly, and lift the prop rod out of the dent of the seat support slot (Figure 109).

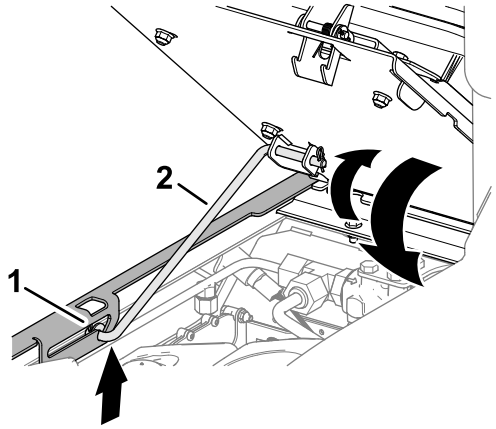

g369220

Figure 109

1. Slot (seat support)
2. Prop rod

2. Carefully lower the seat until it latches securely.

Locating the Jacking Points

Note: Support the machine with jackstands whenever you work under the machine; refer to Specifications (page 30).

Use the following as machine-lift points:

- Front of the machine—at the frame of the machine, forward of the wheel-drive motors (Figure 110).

  Important: **Do not support the machine at the wheel-drive motors. Keep the lifting equipment clear of hydraulic tubing and hoses.**

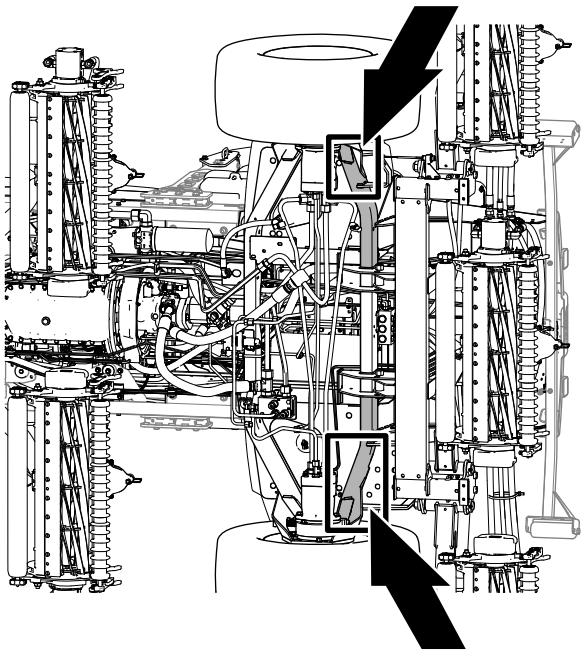

g369205

Figure 110

- Rear of the machine—at the center of the axle (Figure 111)

  Note: Locate the jackstands of the specified capacity at both sides of the gear case and under the axle.

  Important: **Do not support the machine at the tie rod.**

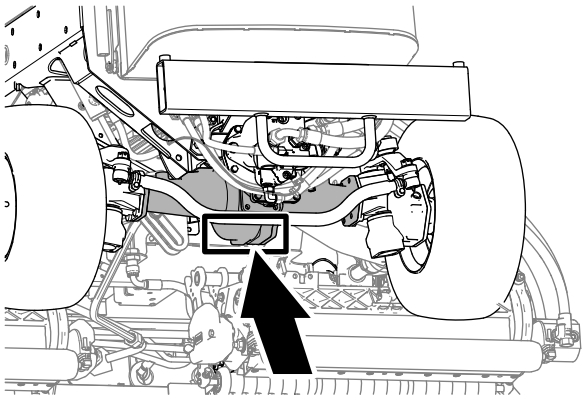

g371178

Figure 111

Greasing the Bearings and Bushings

Service Interval: Every 50 hours Grease the bearings and bushings immediately after washing the machine.

Grease Specification: No. 2 lithium grease

1. Prepare the machine for maintenance; refer to Preparing for Maintenance (page 59).
2. The grease fitting locations and quantities are as follows:
   - Brake shaft pivot bearings (5), refer to Figure 112

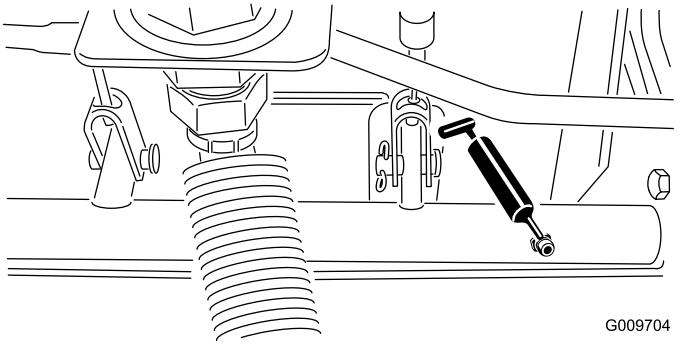

Figure 112

   - Rear axle-pivot bushing and steering cylinder, refer to Figure 113

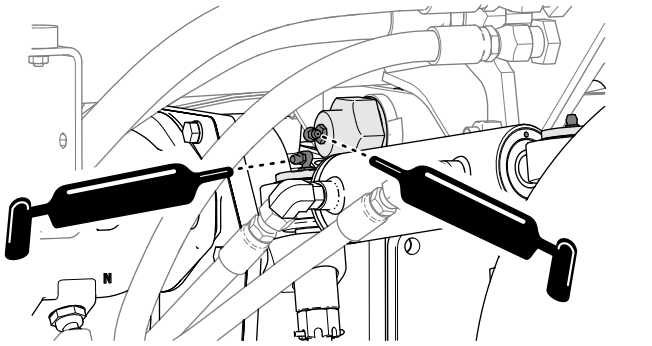

Figure 113

   - Steering cylinder ball joints (2), refer to Figure 114

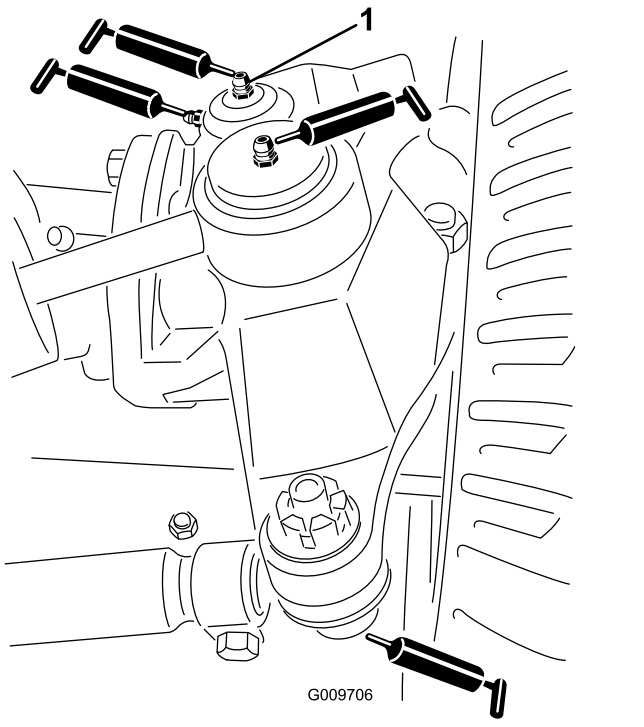

Figure 114

1. Top fitting on king pin

   - Tie rod ball joints (2), refer to Figure 114
   - King pin bushings (2), refer to Figure 114.

     Note: The top fitting on the king pin should only be lubricated annually (2 pumps).
   - Lift arm bushings (1 per cutting unit), refer to Figure 115

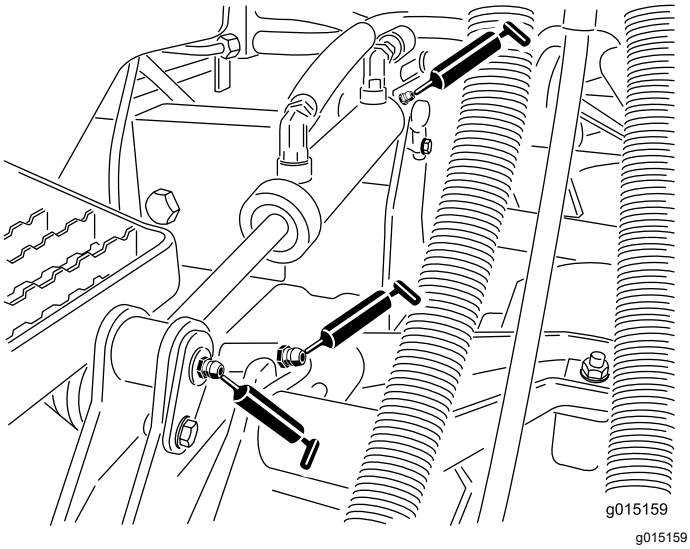

Figure 115

   - Lift cylinder bushings (2 per cutting unit), refer to Figure 115

- Lift arm pivot bushings (1 per cutting unit), refer to Figure 116
- Cutting unit carrier frame (2 per cutting unit), refer to Figure 116
- Cutting unit lift arm pivot (1 per cutting unit), refer to Figure 116

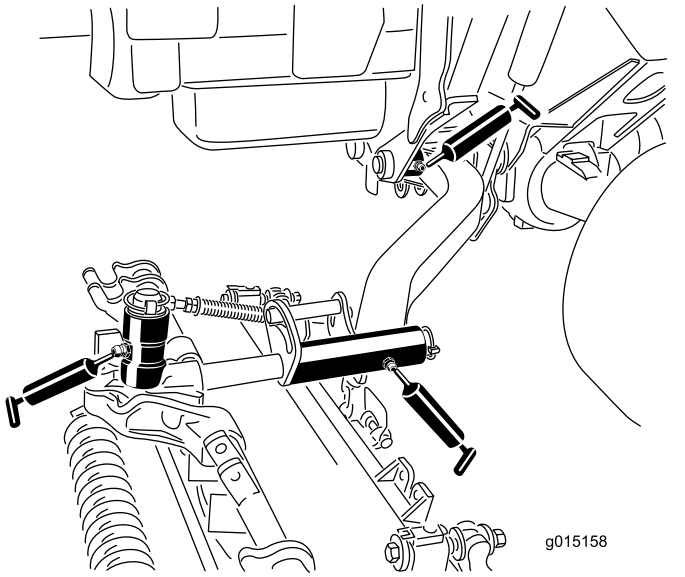

g015158

Figure 116

Engine Maintenance

Engine Safety

- Shut off the engine before checking the oil or adding oil to the crankcase.
- Do not change the governor speed or overspeed the engine.

Checking the Air Filter

Service Interval: Before each use or daily

1. Prepare the machine for maintenance; refer to Preparing for Maintenance (page 59).
2. Open the hood; refer to Opening the Hood (page 59).
3. Check the service indicator at the end of the air filter housing (Figure 117).

   Note: If a red band displays in the service indicator, change the air filter; refer to Removing the Filter (page 64).

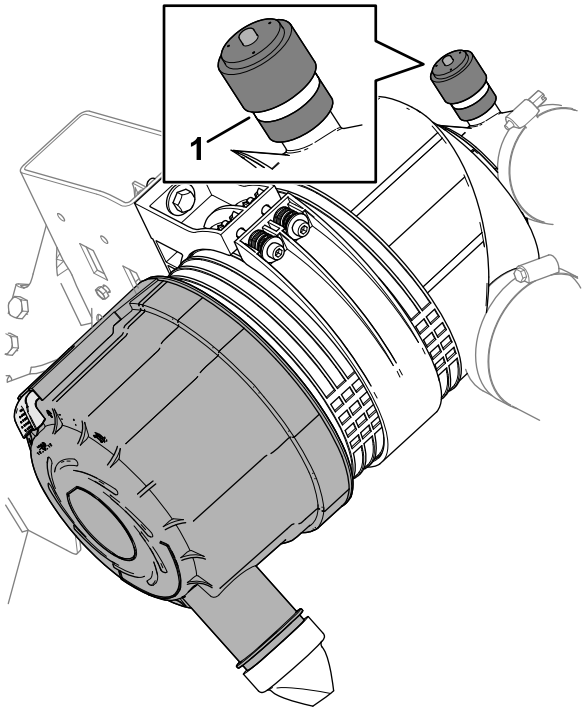

g369206

Figure 117

1. Service indicator

4. Squeeze the dust-ejector valve (Figure 118).

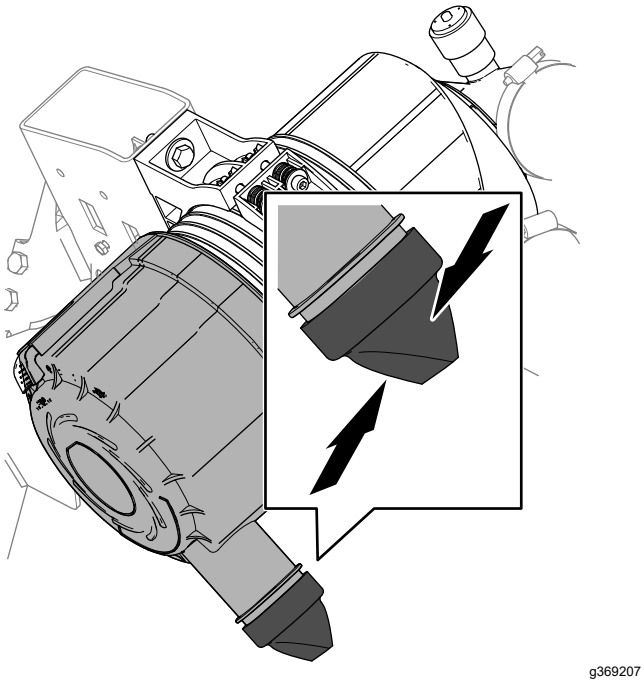

g369207

Figure 118

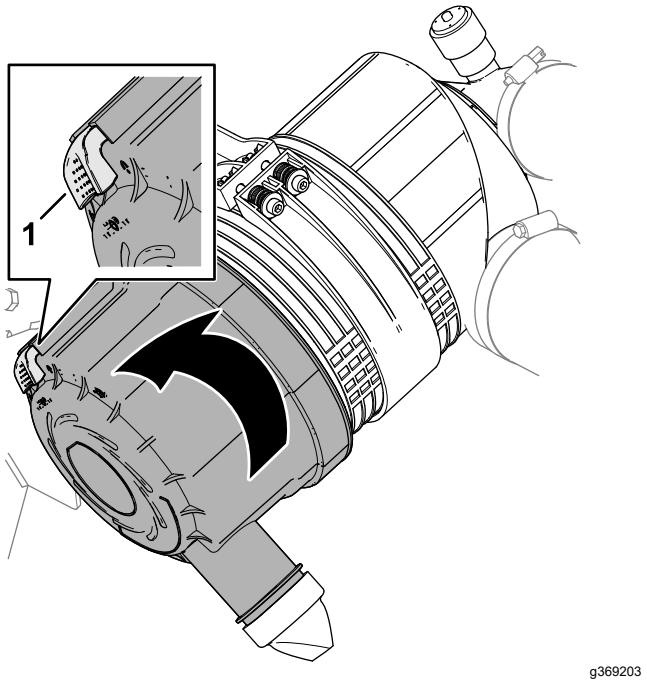

g369203

Figure 119

1. Latch (air-cleaner cover)

5. Close and latch the hood; refer to Closing the Hood (page 60).

Changing the Air Filter

Service Interval: Every 400 hours Service the air filter earlier if the service indicator shows red. Service it more frequently in extremely dirty or dusty conditions.

Removing the Filter

Service the air-cleaner filter only when the service indicator displays a red band. Changing the air filter before it is necessary only increases the chance of dirt entering the engine when the filter is removed.

Important: **Be sure that the cover is seated correctly and seals with the air-cleaner body.**

1. Prepare the machine for maintenance; refer to Preparing for Maintenance (page 59).
2. Open the hood; refer to Opening the Hood (page 59).
3. Check the air-cleaner body for wear of damage which could cause an air leak. Check the whole intake system for leaks, damage, or loose hose clamps.

   Note: Replace a worn or damaged air cleaner and intake-system parts.
4. Pull the latch outward and rotate the air-cleaner cover counterclockwise (Figure 119).
5. Remove the cover from the air-cleaner housing.
6. Before removing the filter, use low-pressure air—275 kPa (40 psi), clean and dry—to help remove large accumulations of debris packed between outside of primary filter and the housing. **Avoid using high-pressure air, which could force dirt through the filter into the intake tract.**

   This cleaning process prevents debris from migrating into the intake when the primary filter is removed.
7. Remove the primary-filter element (Figure 120).

   Note: Do not clean the air filter element.

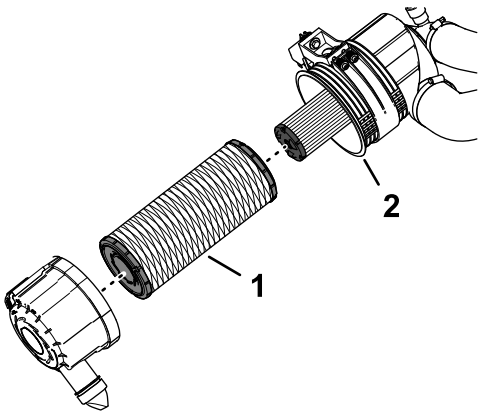

g369223

Figure 120

1. Primary-filter element
2. Air-cleaner housing

Installing the Filter

1. Check the safety-filter element (Figure 121). If it is dirty, replace it.

   Important: **Never attempt to clean the safety filter (Figure 121). Replace the safety filter with a new one after every 3 primary filter services.**

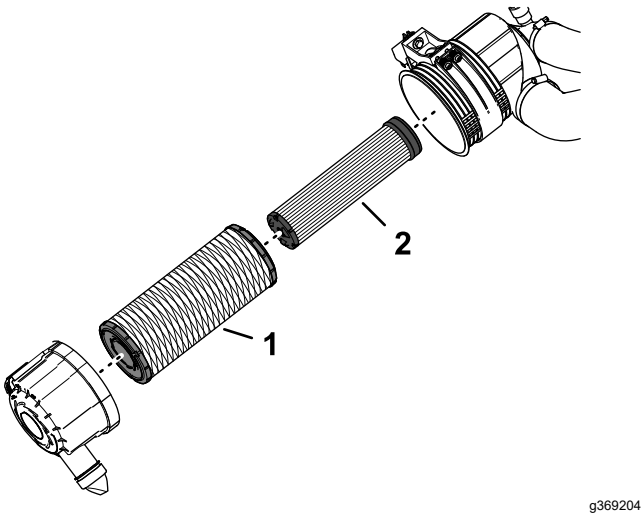

g369204

Figure 121

1. Primary-filter element
2. Safety-filter element

2. Inspect the new filter for shipping damage, checking the sealing end of the filter element and the body of the air filter.

   Important: **Do not use a damaged filter element.**

3. Assemble the primary-filter element. Apply pressure to the outer rim of the element to seat it in the air-filter housing.

   Important: **Do not apply pressure to the flexible center of the filter.**

4. Remove the dust-ejector valve from the air-cleaner cover, clean the cavity, and install the ejector valve to the cover.
5. Assemble the cover onto the air-cleaner housing, aligning the dust-ejector valve in a downward position—between approximately 5 o'clock to 7 o'clock when viewed from the end.
6. If a red band displays in the service indicator, press the reset button at the end of the indicator (Figure 122).

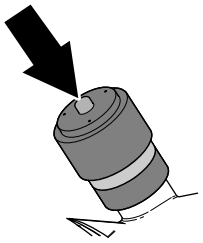

g369218

Figure 122

7. Close and latch the hood; refer to Closing the Hood (page 60).

Oil Specification

Use high-quality, low-ash engine oil that meets or exceeds the following specifications:

- API service category CJ-4 or higher
- ACEA service category E6
- JASO service category DH-2

Important: **Using engine oil other than API CJ-4 or higher, ACEA E6, or JASO DH-2 may cause the diesel particulate filter to plug or cause engine damage.**

Use the following engine oil viscosity grade:

- Preferred oil: SAE 15W-40: above -18°C (0°F)
- Alternate oil: SAE 10W-30 or 5W-30 (all temperatures)

Toro Premium Engine Oil is available from your authorized Toro distributor in either 15W-40 or 10W-30 viscosity grades.

Checking the Engine-Oil Level

Service Interval: Before each use or daily Add engine oil as needed.

The engine is shipped with oil in the crankcase; however, check the oil level before and after you first start the engine.

Note: The best time to check the engine oil is when the engine is cool before it has been started for the day. If the engine has already been run, wait 10 minutes before checking the oil level.

1. Prepare the machine for maintenance; refer to Preparing for Maintenance (page 59).
2. Unlatch and open the hood; refer to Opening the Hood (page 59).
3. Remove the dipstick from the dipstick tube (Figure 123) and wipe the dipstick with a clean rag.

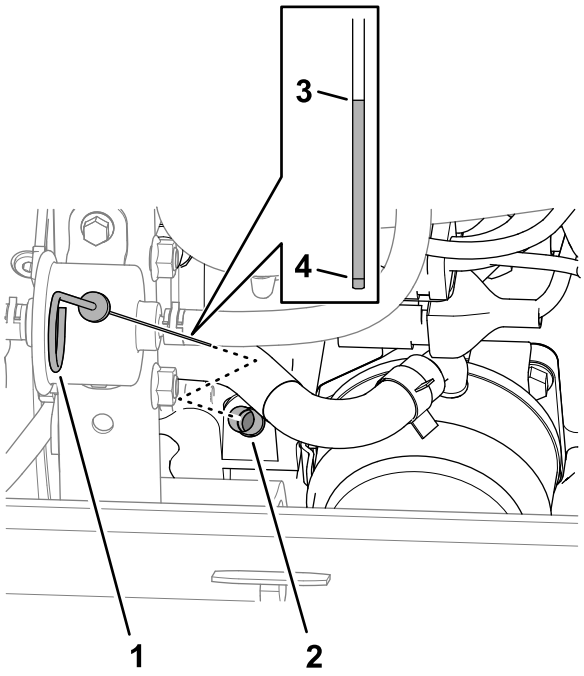

g369816

Figure 123

1. Dipstick
2. Dipstick tube
3. Full oil-level mark
4. Add oil-level mark

4. Fully insert the dipstick down into the dipstick tube, then pull the dipstick out and check the oil level.

   Note: If the oil level is between the Full and Add oil-level marks, you do not need to add oil; skip to step 7.

5. If the oil level is low, remove the oil-fill cap (Figure 124) and gradually add small amounts of oil, checking the level frequently, until the level reaches the Full mark on the dipstick.

   Important: **Keep the engine-oil level between the upper and lower limits on the dipstick. Overfilling or underfilling the engine oil may cause severe engine damage.**

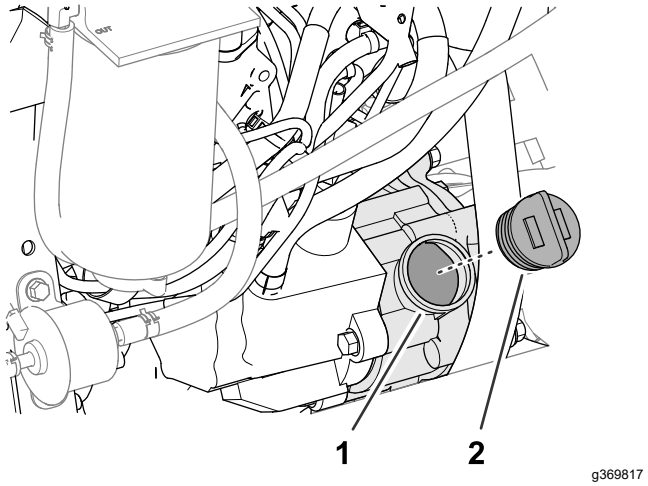

g369817

Figure 124

1. Oil filler port
2. Oil-fill cap

6. Install the oil-fill cap and dipstick.
7. Close and latch the hood; refer to Closing the Hood (page 60).

Crankcase Oil Capacity

5.7 L (6.0 US qt) with the filter.

Changing the Engine Oil and Filter

Service Interval: Every 500 hours

Draining the Engine Oil

1. Prepare the machine for maintenance; refer to Preparing for Maintenance (page 59).
2. Remove the oil filler cap.
3. Align a drain pan under the drain plug.
4. Remove the drain plug (Figure 125) and let the oil drain into the pan.

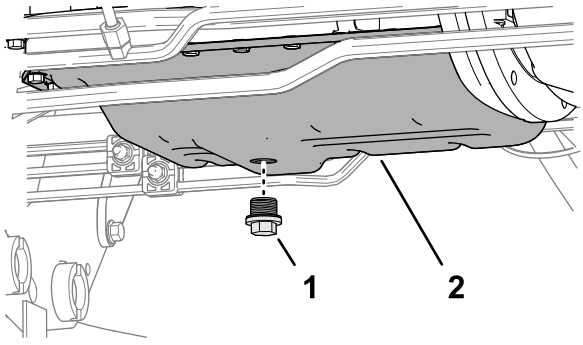

g369411

Figure 125

1. Drain plug
2. Engine-oil pan

5. When oil stops draining from the engine, install the drain plug and torque it to 54 to 63 N·m (40 to 47 ft-lb).

Changing the Oil Filter

1. Rotate the oil filter counterclockwise to remove it (Figure 126).

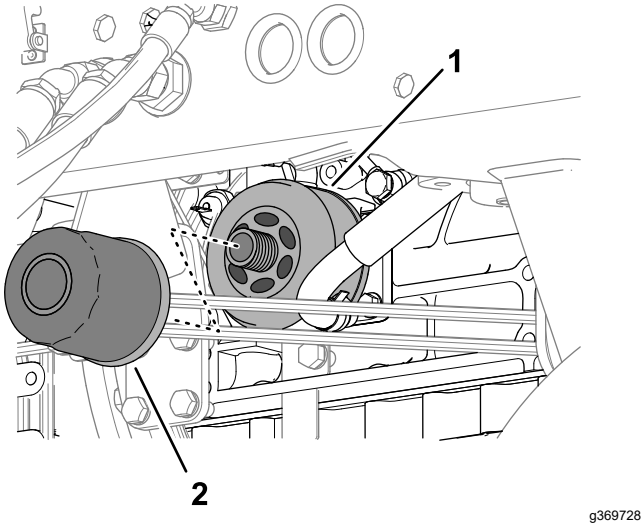

g369728

Figure 126

1. Filter adapter
2. Oil filter

2. Wipe clean the filter adapter.
3. Apply a light coat of clean oil to the seal of the new filter.

   Note: Do not overtighten the filter.
4. Thread the filter onto the filter adapter until the filter contacts the adapter, then tighten the filter 1 addition turn.
5. Add oil to the engine and install the filler cap; refer to Oil Specification (page 65), Crankcase Oil Capacity (page 66), and Checking the Engine-Oil Level (page 65).

Servicing the Diesel-Oxidation Catalyst (DOC) and the Soot Filter

Service Interval: Every 6,000 hours—Disassemble, clean, and assemble the soot filter of the DPF or clean the soot filter if engine faults SPN 3251 FMI 0, SPN 3720 FMI 0, or SPN 3720 FMI 16 displays in the InfoCenter.

If engine faults CHECK ENGINE SPN 3251 FMI 0, CHECK ENGINE SPN 3720 FMI 0, or CHECK ENGINE SPN 3720 FMI 16 displays in the InfoCenter (Figure 127), clean the soot filter using the steps that follow:

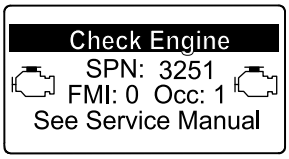

g214715

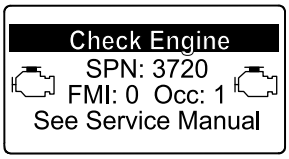

g213864

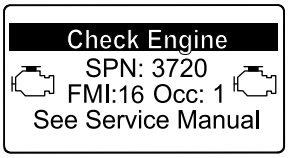

g213863

Figure 127

1. Refer to the Engine section in the *Service Manual* for information on disassembling and assembling the diesel-oxidation catalyst and the soot filter of the DPF.
2. Refer to your authorized Toro distributor for diesel-oxidation catalyst and the soot filter replacement parts or service.
3. Contact your authorized Toro distributor to reset the engine ECU after you install a clean DPF.

Fuel System Maintenance

⚠ DANGER

Under certain conditions, fuel and fuel vapors are highly flammable and explosive. A fire or explosion from fuel can burn you and others and can cause property damage.

- **Fill the fuel tank outdoors, in an open area, when the engine is off and is cold. Wipe up any fuel that spills.**
- **Do not fill the fuel tank completely full. Add fuel to the fuel tank until the level is 25 mm (1 inch) below the top of the tank, not the filler neck. This empty space in the tank allows the fuel to expand.**
- **Never smoke when handling fuel, and stay away from an open flame or where fuel fumes may be ignited by a spark.**
- **Store fuel in a clean, safety-approved container and keep the cap in place.**

Draining the Fuel-Water Separator

Service Interval: Before each use or daily—Drain water or other contaminants from the water separator.

1. Prepare the machine for maintenance; refer to Preparing for Maintenance (page 59).
2. Open the hood; refer to Opening the Hood (page 59).
3. Place a drain pan under the fuel-water separator filter (Figure 128).

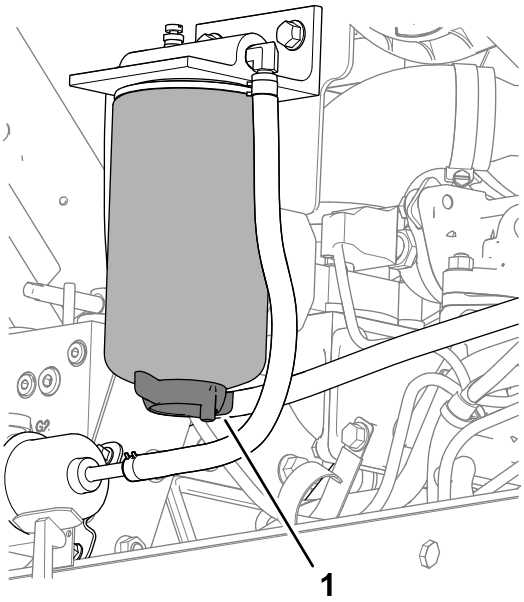

Figure 128

1. Drain valve (fuel-water separator filter)

4. Loosen the drain valve at the bottom of the fuel-water separator filter, and allow the fuel and water to drain.
5. Close the drain valve at the bottom of the fuel-water separator filter.
6. Close and latch the hood; refer to Closing the Hood (page 60).

Checking the Fuel Lines and Connections

Service Interval: Every 400 hours/Yearly (whichever comes first)

Park the machine on a level surface, lower the cutting units, engage the parking brake, shut off the engine, and remove the key.

1. Prepare the machine for maintenance; refer to Preparing for Maintenance (page 59).
2. Open the hood; refer to Opening the Hood (page 59).
3. Inspect the fuel lines for wear, deterioration, damage, or loose fittings.

   Note: Repair or replace any worn or damaged fuel lines; tighten any loose fittings.
4. Close and latch the hood; refer to Closing the Hood (page 60).

Changing the Fuel-Water Separator Filter

Service Interval: Every 400 hours

1. Drain the fuel-water separator; refer to steps 1 through 4 in Draining the Fuel-Water Separator (page 68).
2. Clean the fuel-water separator filter and filter head (Figure 129).

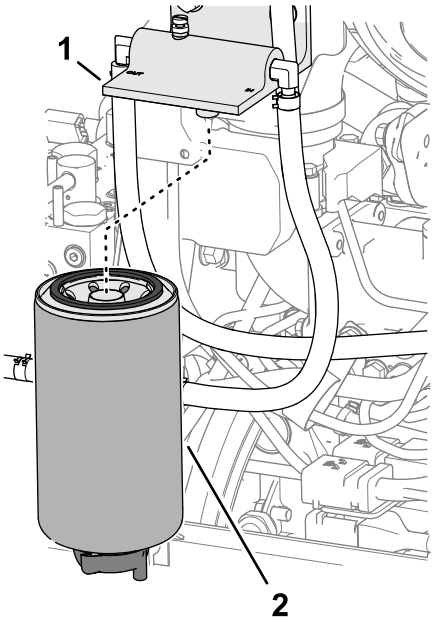

g369850

Figure 129

1. Filter head
2. Fuel-water separator filter

3. Remove the separator filter from the filter head.
4. Clean the filter-mounting surface of the filter head.
5. Apply a coat of clean fuel to the gasket of the new separator filter.
6. Thread the separator filter into the filter head until the gasket contacts mounting surface, then rotate the filter an additional 1/2 turn.
7. Check that the drain valve at the bottom of the fuel-water separator filter is closed.
8. Start the engine and check for fuel leaks around the separator filter and filter head.
9. Shutoff the engine, remove the key, close and latch the hood; refer to Closing the Hood (page 60).

Changing the Engine-Fuel Filter

Service Interval: Every 400 hours

1. Prepare the machine for maintenance; refer to Preparing for Maintenance (page 59).
2. Open the hood; refer to Opening the Hood (page 59).
3. Clean the area around the fuel-filter head (Figure 130).

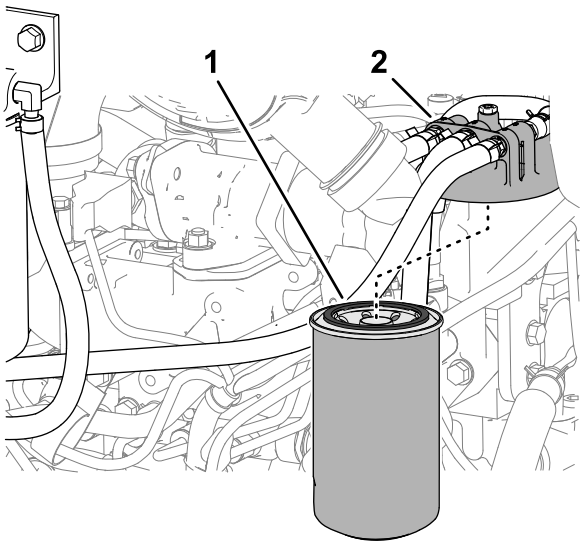

g369851

Figure 130

1. Fuel filter
2. Fuel-filter head

4. Remove the filter and clean the filter-head mounting surface (Figure 130).
5. Lubricate the filter gasket with clean lubricating engine oil. Refer to the engine owner's manual, included with the machine, for additional information.
6. Install the dry filter canister, by hand, until the gasket contacts the filter head, then rotate it an additional 1/2 turn.
7. Start the engine and check for fuel leaks around the filter head.
8. Shutoff the engine, remove the key, close and latch the hood; refer to Closing the Hood (page 60).

Draining and Cleaning the Fuel Tank

Service Interval: Every 800 hours

Before storage

Drain and clean the fuel tank if the fuel system becomes contaminated or if the machine is to be stored for an extended period. Use clean fuel to flush out the tank.

1. Prepare the machine for maintenance; refer to Preparing for Maintenance (page 59).
2. Align a drain container under the drain valve at the bottom of the fuel tank (Figure 131).

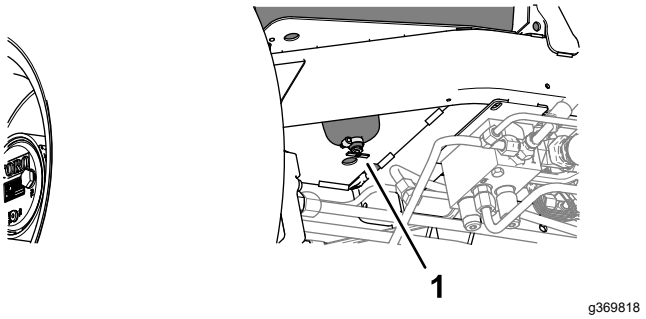

Figure 131

1. Drain valve (bottom of the fuel tank)

3. Open the drain valve and allow the fuel to drain.
4. If needed, add clean fuel to the fuel tank to flush it out.
5. Close the drain valve.

   Note: When you add fuel to the tank, check the drain valve for leaks.

Cleaning the Fuel-Intake Screen

Park the machine on a level surface, lower the cutting units, engage the parking brake, shut off the engine, and remove the key.

The fuel-intake tube, located inside the fuel tank, is equipped with a screen to help prevent debris from entering the fuel system. Remove the fuel-intake tube and clean the screen as required.

1. Prepare the machine for maintenance; refer to Preparing for Maintenance (page 59).
2. Tilt the seat; refer to Tilting the Seat (page 60).
3. Remove the clamp that secures the hose to the fuel pick-up tube (Figure 132).

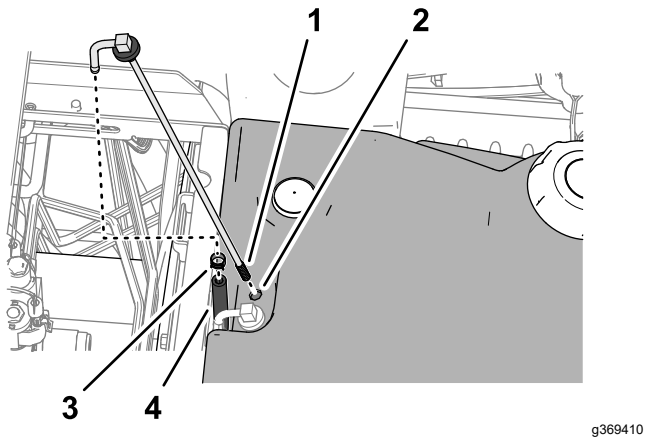

Figure 132

1. Screen (fuel pick-up tube)
2. Fuel tank
3. Hose clamp
4. Hose

4. Remove the fuel pick-up tube and rubber bushing from the tank.
5. Clean the screen at the end of the fuel pick-up tube (Figure 132).
6. Insert the fuel pick-up tube and rubber bushing into the tank until the bushing is seated into the tank.
7. Assemble the hose onto the fuel pick-up tube and secure it with the clamp.
8. Lower and latch the seat; refer to Lowering the Seat (page 61).

Electrical System Maintenance

Electrical System Safety

- Disconnect the battery before repairing the machine. Disconnect the negative terminal first and the positive last. Connect the positive terminal first and the negative last.
- Charge the battery in an open, well-ventilated area, away from sparks and flames. Unplug the charger before connecting or disconnecting the battery. Wear protective clothing and use insulated tools.

Disconnecting the Battery

⚠ DANGER

Battery electrolyte contains sulfuric acid, which is fatal if consumed and causes severe burns.

- **Do not drink electrolyte and avoid contact with skin, eyes, or clothing. Wear safety glasses to shield your eyes and rubber gloves to protect your hands.**
- **Fill the battery where clean water is always available for flushing the skin.**

1. Prepare the machine for maintenance; refer to Preparing for Maintenance (page 59).
2. Open the battery-compartment cover; refer to Accessing the Battery Compartment (page 60).
3. Disconnect the negative battery cable (Figure 133).

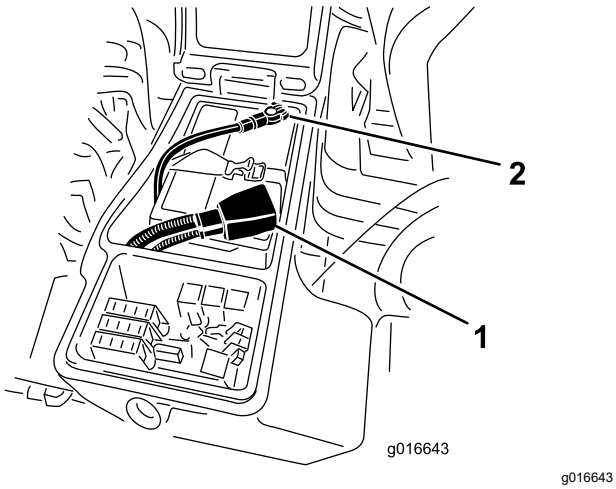

g016643

Figure 133

1. Positive battery cable
2. Negative battery cable

4. Slide the rubber boot off the positive battery-cable clamp, and disconnect the positive battery cable.

Connecting the Battery

1. Install the positive battery cable (red) to the positive (+) battery post (Figure 134).

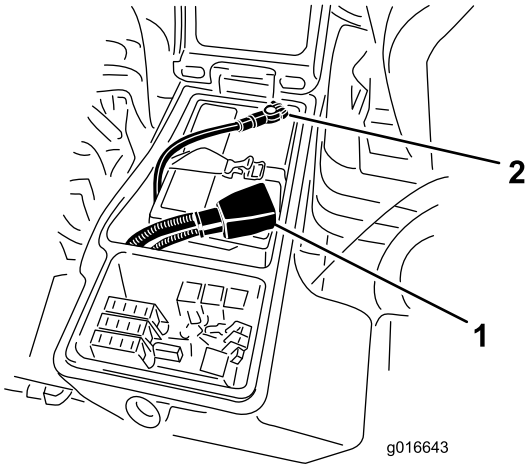

g016643

Figure 134

1. Positive battery cable
2. Negative battery cable

2. Install the negative battery cable (black) to the negative (-) battery post.
3. Apply a coat of Grafo 112X (skin-over) grease, Toro Part No. 505-47 to the battery posts and battery-cable clamps.
4. Slide the rubber boot over the positive battery-cable clamp.
5. Close and latch the battery-compartment cover.

Charging the Battery

1. Disconnect the battery; refer to Disconnecting the Battery (page 71).
2. Connect a 3 to 4 A battery charger to the battery posts.
3. Charge the battery at a rate of 3 to 4 A for 4 to 8 hours.
4. When the battery is charged, disconnect the charger from the electrical outlet and battery posts.
5. Connect the battery; refer to Connecting the Battery (page 71).

Servicing the Battery

Service Interval: Every 50 hours

Note: Keep the terminals and the entire battery case clean because a dirty battery will discharge slowly.

1. Prepare the machine for maintenance; refer to Preparing for Maintenance (page 59).
2. Open the battery-compartment cover; refer to Accessing the Battery Compartment (page 60).
3. Check the condition of the battery.

   Note: Replace a worn or damaged battery.
4. Disconnect the battery cables, and remove the battery from the machine; refer to Disconnecting the Battery (page 71).
5. Wash the entire battery case with a solution of sodium bicarbonate (baking soda) and water.
6. Rinse the case with clean water.
7. Assemble the battery to the machine and connect the battery cables; refer to Connecting the Battery (page 71).
8. Close and latch the battery-compartment cover.

Replacing a Fuse

The fuse block is in the battery compartment.

1. Prepare the machine for maintenance; refer to Preparing for Maintenance (page 59).
2. Open the battery-compartment cover; refer to Accessing the Battery Compartment (page 60).
3. Replace the open fuse (Figure 135) with the same fuse type and amperage rating.

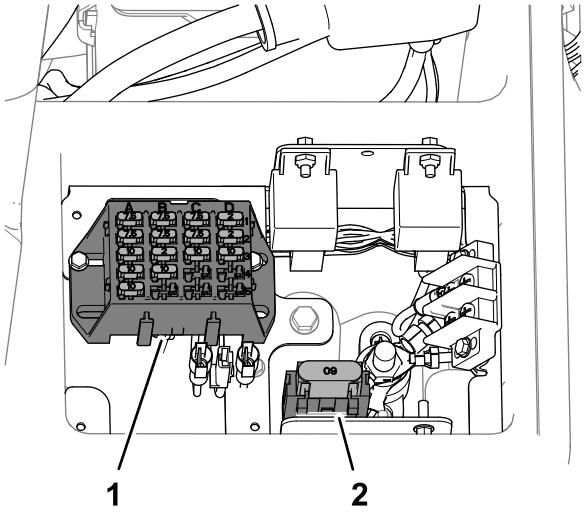

g369853

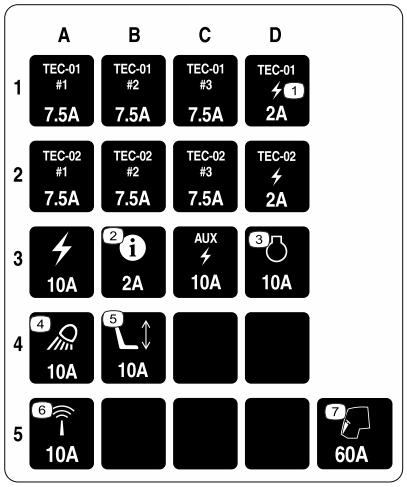

g372876

Figure 135

1. Fuse block
2. Maxi fuse socket

4. Close and latch the battery-compartment cover.

Drive System Maintenance

Checking the Tire Air Pressure

Service Interval: Before each use or daily

Important: **Maintain the recommended pressure in all tires to ensure a good quality of cut and proper machine performance. Do not underinflate the tires.**

1. Prepare the machine for maintenance; refer to Preparing for Maintenance (page 59).
2. Measure the tire air pressure.

   Note: The correct air pressure in the tires is 83 to 103 kPa (12 to 15 psi).
3. If needed add air to or remove air from the tire.
4. Repeat steps 2 and 3 at the other tires.

Checking the Torque of the Wheel Nuts

Service Interval: After the first 8 hours

Every 200 hours

⚠ WARNING

Failure to maintain proper torque of the wheel nuts could result in failure or loss of a wheel and may result in personal injury.

Torque the front and rear wheel nuts to 115 to 136 N·m (85 to 100 ft-lb) after 1 to 4 hours of operation and again after 8 hours of operation. Torque the wheel nuts every 200 hours thereafter.

1. Prepare the machine for maintenance; refer to Preparing for Maintenance (page 59).
2. Torque the wheel nuts to 115 to 136 N·m (85 to 100 ft-lb).

   Note: The front wheel nuts are 1/2–20 UNF; the rear wheel nuts are M12 x 1.6-6H (metric).

Checking for End-Play in the Planetary Drives

Service Interval: Every 400 hours

⚠ DANGER

A machine on a jack may be unstable and slip off the jack, injuring anyone beneath it.

- **Do not start the engine while the machine is on a jack.**
- **Always remove the key from the switch before getting off the machine.**
- **Block the tires when you are raising the machine with a jack.**
- **Support the machine with jack stands.**

There should be no end-play in the planetary drives/drive wheels (i.e., the wheels should not move when you pull or push them in a direction parallel to the axle).

1. Prepare the machine for maintenance; refer to Preparing for Maintenance (page 59).
2. Chock the rear wheels and raise the front of machine; refer to Specifications (page 30) and Locating the Jacking Points (page 61).
3. Support the front frame of the machine with jack stands.
4. Grasp 1 of the front drive wheels and push/pull it toward and away from the machine, noting any movement.

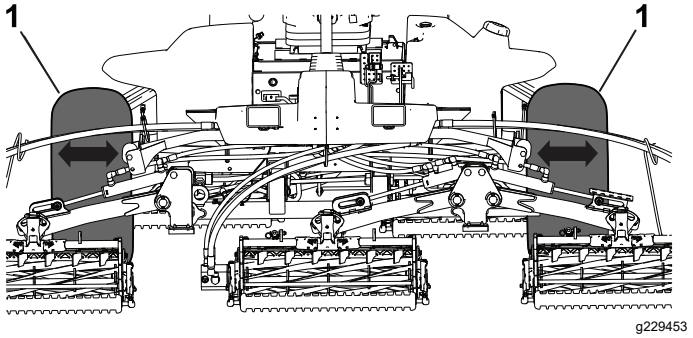

Figure 136

1. Front drive wheels

5. Repeat step 4 for the other drive wheel.
6. If either wheel moves, contact your authorized Toro distributor to have the planetary drive rebuilt.

Checking the Planetary Gear-Drive Lubricant

Service Interval: Every 400 hours (check if you notice external leakage).

Lubricant Specification: high quality SAE 85W-140 gear oil

1. Park the machine on level surface, position the wheel so that the fill plug is at the 12 o'clock position, the check plug is at 3 o'clock position, and the drain plug is at the 6 o'clock position (Figure 137).

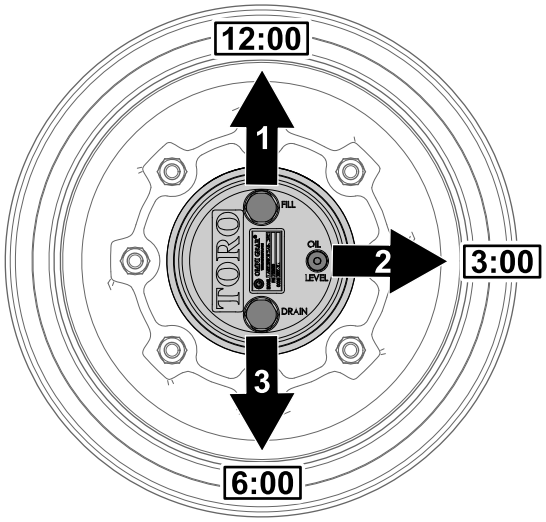

g225612

Figure 137

1. Fill plug (12 o'clock position)
2. Check plug (3 o'clock position)
3. Drain plug (6 o'clock position)

2. Remove the check plug at the 3 o'clock position (Figure 137).

   The oil level should be at the bottom of the check-plug hole.

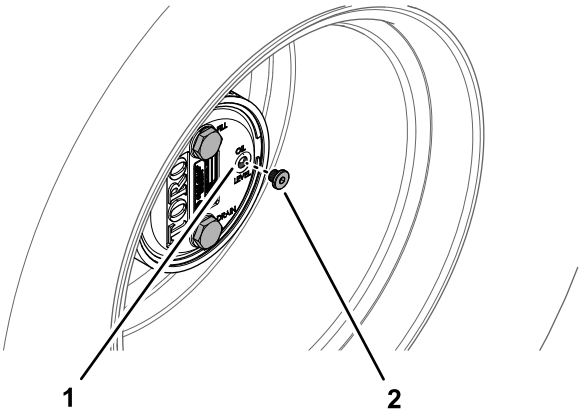

g225606

Figure 138

1. Check-plug hole
2. Check plug

3. If the oil level is low, remove the fill plug at the 12 o'clock position and add oil until it begins to flow out of the hole at the 3 o'clock position.
4. Check the O-ring for the plug(s) for wear or damage.

   Note: Replace the O-ring(s) as needed.
5. Install the plug(s).
6. Repeat steps 1 through 5 on the planetary gear assembly at the other side of the machine.

Changing the Planetary-Gear-Drive Oil

Service Interval: After the first 50 hours

Every 800 hours or yearly, whichever comes first.

Lubricant specification: high quality SAE 85W-140 gear oil

Planetary and brake housing lubrication capacity: 0.65 L (22 fl oz)

Draining the Planetary-Gear-Drive

1. Park the machine on level surface, position the wheel so that the fill plug is at the 12 o'clock position, the check plug is at 3 o'clock position, and the drain plug is at the 6 o'clock position; refer to Figure 137 in Checking the Planetary Gear-Drive Lubricant (page 74).
2. Remove the fill plug at the 12 o'clock position and the check plug at the 3 o'clock position (Figure 139).

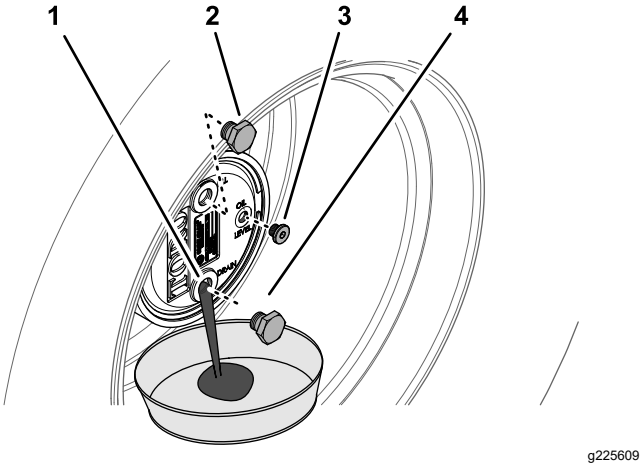

g225609

Figure 139

1. Drain-plug hole
2. Fill plug
3. Check plug
4. Drain plug

3. Place a drain pan under the planetary hub, remove the drain plug at the 6 o'clock position, and allow the oil to fully drain (Figure 139).
4. Check the O-rings for the fill, check, and drain plugs for wear or damage.

   Note: Replace the O-ring(s) as needed.
5. Install the drain plug into the drain hole of the planetary housing (Figure 139).
6. Place a drain pan under the brake housing, remove the drain plug, and allow the oil to fully drain (Figure 140).

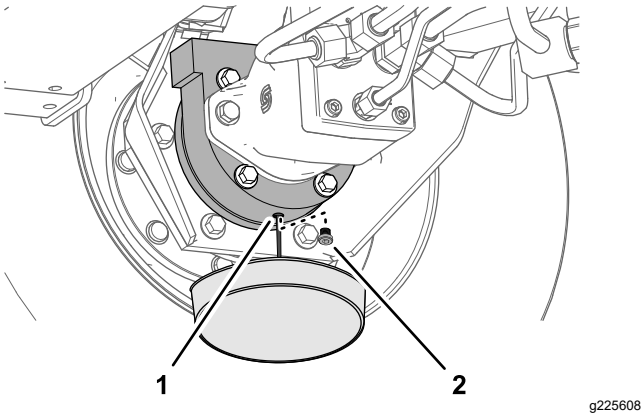

g225608

Figure 140

1. Drain hole (brake housing) 2. Drain plug

7. Check the O-ring for the plug for wear or damage and install the drain plug into the brake housing.

   Note: Replace the O-ring as needed.

Filling the Planetary-Gear-Drive with Lubricant

1. Through the fill-plug hole, slowly fill the planetary with 0.65 L (22 fl oz) of high quality SAE 85W-140 gear oil.

   Important: **If the planetary fills before you add 0.65 L (22 fl oz) of oil, wait 1 hour or install the plug and move the machine approximately 3 m (10 ft) to distribute the oil through the brake system. Then, remove the plug and add the remaining oil.**

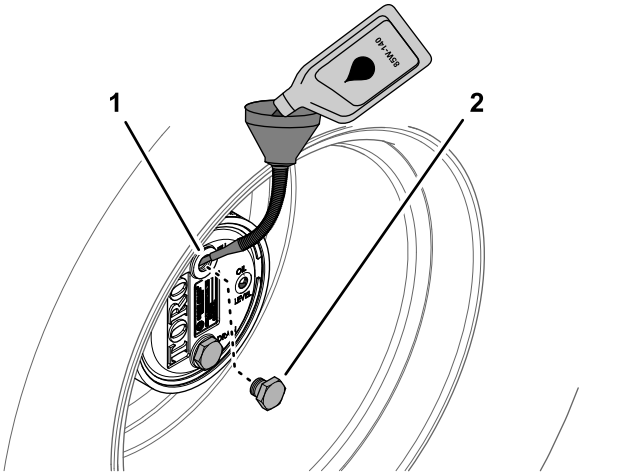

g225610

Figure 141

1. Fill-plug hole (planetary housing) 2. Fill plug

2. Install the fill plug and the check plug.
3. Wipe clean the planetary and brake housings (Figure 142).

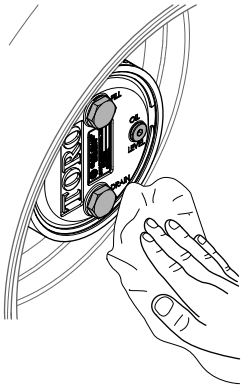

g225607

Figure 142

4. Repeat steps 1 through 7 in Draining the Planetary-Gear-Drive (page 74) and steps 1 through 3 in this procedure for the planetary/brake assembly at the other side of the machine.

Checking the Oil Level of the Rear Axle

Service Interval: Before each use or daily

Every 400 hours (Also check the oil level before you start the engine for the first time.)

Axle Oil Specification: SAE 85W-140 gear oil

1. Prepare the machine for maintenance; refer to Preparing for Maintenance (page 59)
2. Remove a check plug from 1 end of the axle housing (Figure 143).

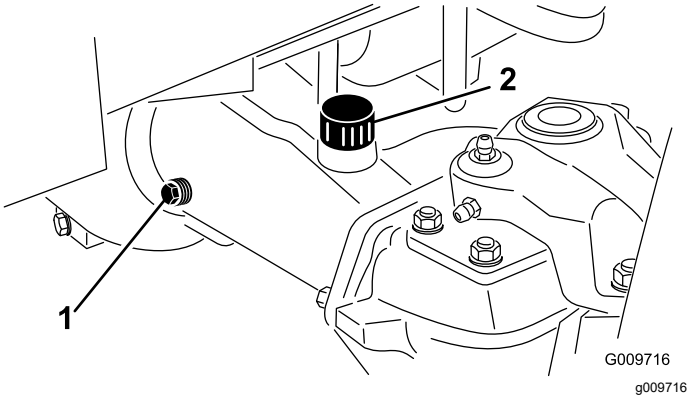

Figure 143

1. Check plug (axle housing) 2. Fill plug (axle housing)

3. Check the gear oil level in the axle through the check-plug hole.

   Note: The gear-oil level is correct if the oil level is at the bottom of the check-plug hole.
4. If the gear-oil level low, remove the fill plug and add the specified gear oil to raise the oil level to the bottom of the check-plug hole.
5. Install the check plug.
6. If removed, install the fill plug.

Changing the Oil in the Rear Axle

Service Interval: After the first 200 hours

Every 800 hours

Rear Axle Oil Capacity: 2.4 L (80 fl oz)

1. Prepare the machine for maintenance; refer to Preparing for Maintenance (page 59).
2. Clean the area around the 3 drain plugs (Figure 144)—1 at each bevel-gear case (outboard of the axle housings) and 1 in the center-gear case.

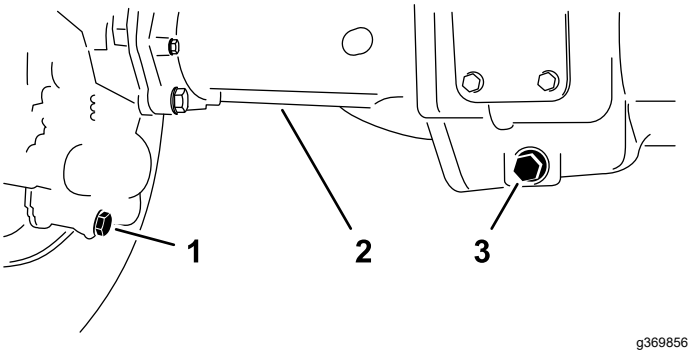

Figure 144

1. Drain plug (axle case—outboard)
2. Axle housing
3. Drain plug (center gear case)

3. Remove each drain plug (Figure 144) and allow the oil to drain into a drain pan.
4. Remove the 2 axle housing check plugs and the fill plug to ease in draining of the oil (Figure 145).

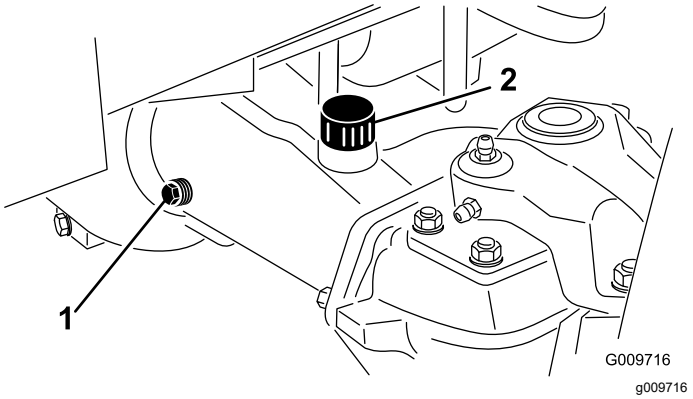

Figure 145

1. Check plug (axle housing) 2. Fill plug (axle housing)

5. Install the 3 drain plugs and the check plug at the axle housing with the breather fitting.
6. At the fill plug axle port, fill the axle with approximately 2.37 L (80 fl oz) of 85W-140 gear oil or until the oil level is at the bottom of the hole.
7. Install the check plug and the fill plug.

Checking the Lubricant in the Reduction-Gear Case

Service Interval: Before each use or daily

Every 400 hours (Also check the lubricant before you first start the engine.)

Reduction-Gear Case Oil Specification: SAE 85W-140 gear oil

1. Prepare the machine for maintenance; refer to Preparing for Maintenance (page 59).
2. Remove the check/fill plug from the left side of the reduction-gear case (Figure 146).

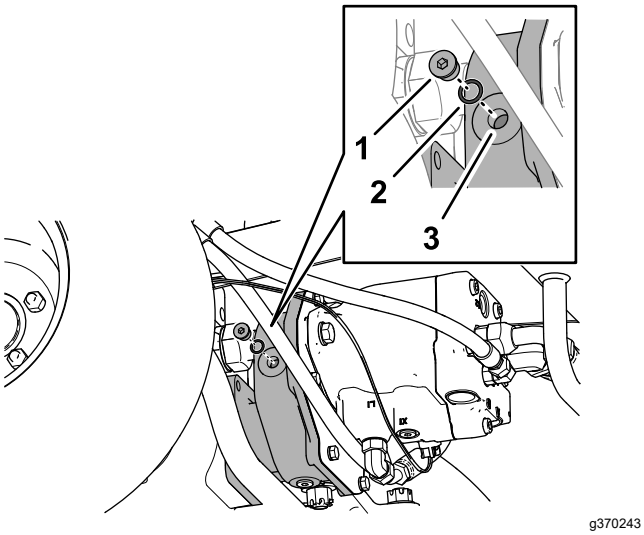

Figure 146

1. Check/fill plug
2. O-ring
3. Reduction-gear case

3. Check the O-ring for the plug is not worn or damaged.

4. Check the gear-case oil level.

   Note: The gear-oil level is correct if the oil level is at the bottom of the check/fill-plug hole.

5. If the gear-oil level is low, add enough of the specified case oil to bring the level up to the bottom of the check/fill-plug hole.

6. Install the check/fill plug.

Mow Speed-Spacer Table

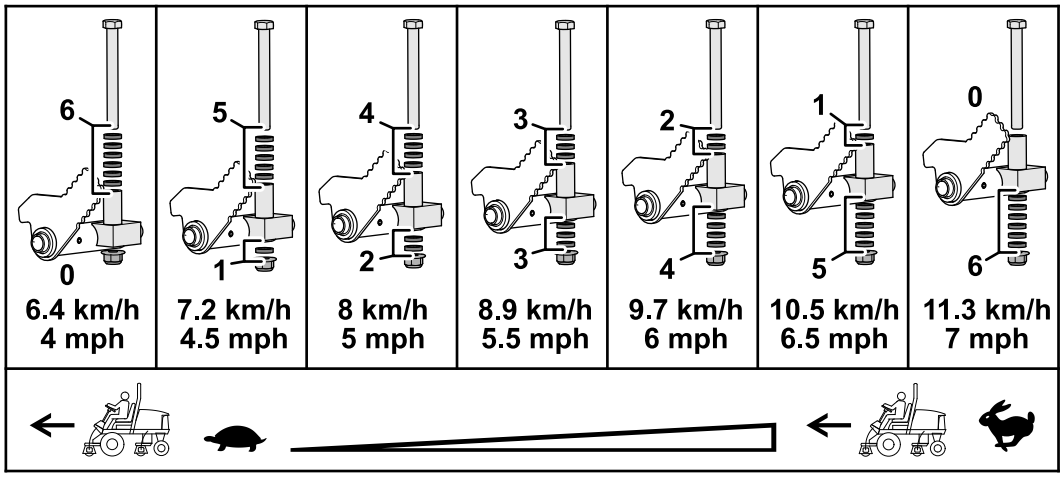

Figure 147

Adjusting Maximum Mow-Ground Speed

Adjusting the Mow Speed-Spacers

1. Prepare the machine for maintenance; refer to Preparing for Maintenance (page 59).
2. Use the Mow Speed-Spacer Table to determine the maximum ground speed when you mow, and the position of the short spacers that limit mow-ground speed; refer to Mow Speed-Spacer Table (page 77).

   Note: Each short spacer adjusts the mowing speed by 0.8 km/h (0.5 mph).

3. Below the traction pedal, remove the stop bolt and flange locknut that secure the spacers to the mow-stop block (Figure 148).

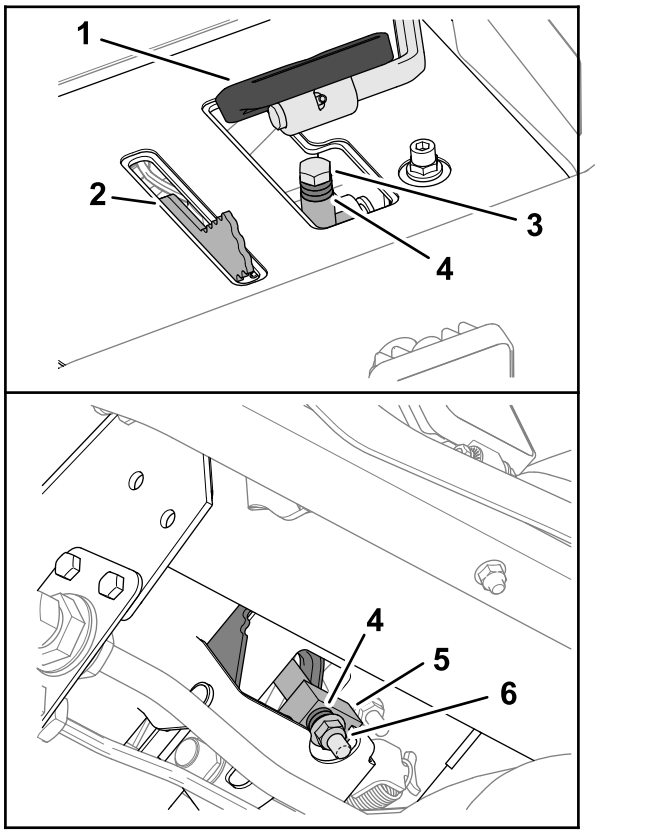

g368822

Figure 148

1. Traction pedal
2. Mow-speed limiter
3. Stop bolt
4. Short spacers
5. Mow-stop block
6. Flange locknut

4. Position the long spacer above the mow-stop block.
5. Position the short spacers as you determined in step 2.
6. Secure the spacers to the mow-stop block with the stop bolt and flange locknut that you removed in step 3.

   Note: You must install all 6 short spacers and the long spacer.
7. Set the mow speed in the InfoCenter; refer to Setting the Mow Speed in the InfoCenter (page 78).

Setting the Mow Speed in the InfoCenter

The mow speed setting in the InfoCenter is used by the TEC to adjust reel speed of the cutting units to the maximum mow-ground speed.

1. In the InfoCenter, access the MAIN MENU.
2. In the MAIN MENU, press the middle button until the SETTING option is highlighted, and press the right button.
3. In the SETTING MENU, press the middle button until the PROTECTED MENUS option is highlighted, and press the right button.
4. In the PROTECTED MENUS screen, enter the PIN code; refer to Accessing Protected Menus (page 28).
5. In the SETTINGS menu, press the middle button until the MOW SPEED option is highlighted, and press the right button.
6. In the MOW SPEED screen, press the middle button or the right button until the mow speed displayed in the InfoCenter is the same as the Maximum Mow-Ground Speed that you determined in step 2 of Adjusting the Mow Speed-Spacers (page 77).

   Note: The mow speed setting increases or decreases in 0.8 kph (0.5 mph) increments.

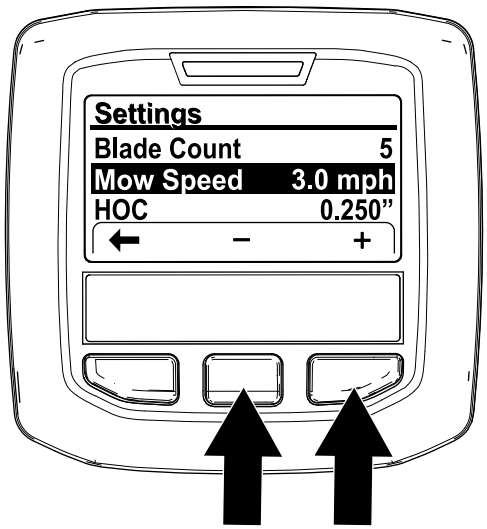

g368874

Figure 149

Note: The indicator light illuminates and Advisory #176 (Reel Speed Changed) displays.

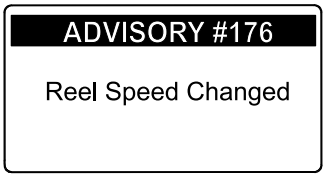

g368873

Figure 150

7. Press the left button to exit the Settings menu.

Adjusting the Traction Drive for Neutral

The machine must not move forward or backward when you release the traction pedal. If the machine moves, adjust the traction drive for neutral.

1. Park the machine on a level surface, shut off the engine, position the speed control into the low range, and lower the cutting units.
2. Press only the right brake pedal and engage the parking brake.
3. Jack up the left side of the machine until the left front tire is off the shop floor. Support the machine with jack stands to prevent it from falling accidentally; refer to Specifications (page 30) and Locating the Jacking Points (page 61).
4. Start the engine and allow it run at low idle.
5. Adjust the jam nuts on the rod end to move the traction rod forward to eliminate forward creep or rearward to eliminate rearward creep (Figure 151 and Figure 152).

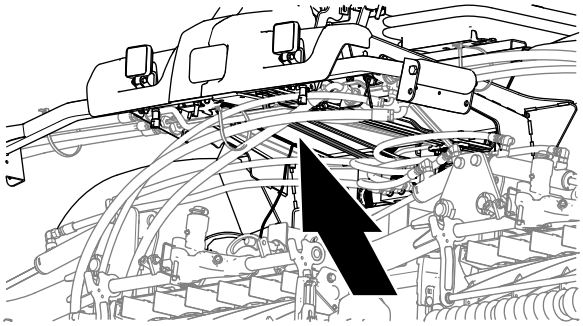

g370368

Figure 151

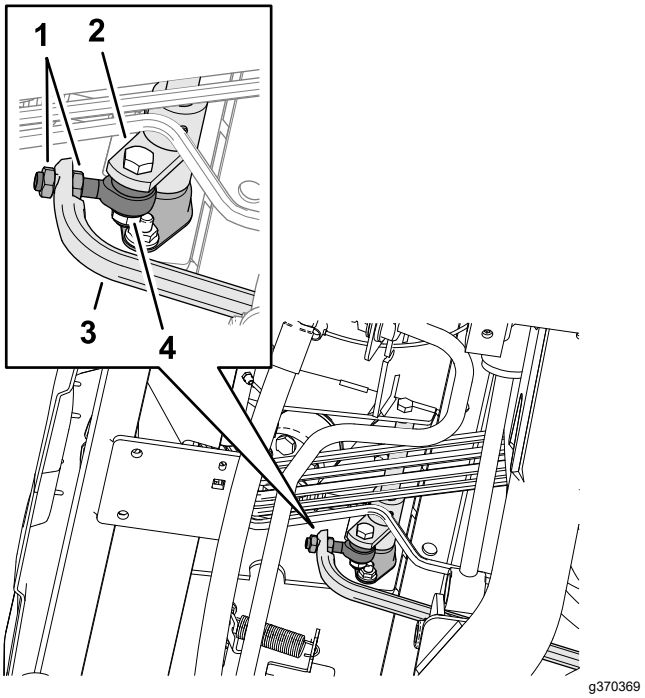

g370369

Figure 152

1. Jam nuts
2. Traction hub pivot
3. Traction rod
4. Rod end

6. When the wheel stops rotating, tighten the jam nuts to secure the adjustment.
7. Shut off the engine and remove the key.
8. Remove the jack stands and lower the machine to the shop floor.
9. Test drive the machine to ensure that it does not creep.

Checking the Rear-Wheel Alignment

Service Interval: Every 800 hours/Yearly (whichever comes first)

1. Prepare the machine for maintenance; refer to Preparing for Maintenance (page 59).
2. Measure the center-to-center distance (at axle height) at the front and rear of the steering tires.

   Note: The front measurement must be 3 mm (1/8 inch) less than the rear measurement (Figure 153).

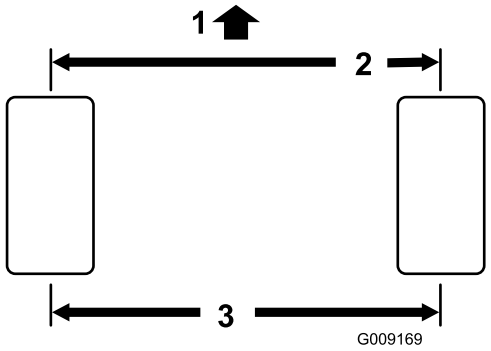

g009169

Figure 153

1. Front of the traction unit
2. 3 mm (1/8 inch) less than the rear of the tire
3. Center-to-center distance

Adjusting the Rear-Wheel Toe-In

1. At the rear axle, remove the cotter pin and the slotted nut from either tie-rod end (Figure 154).

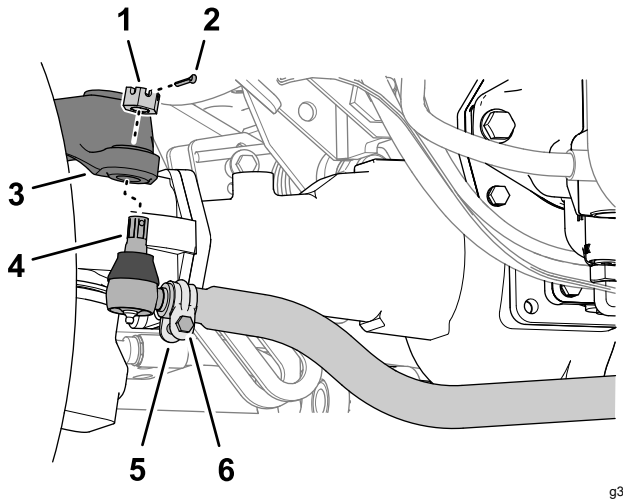

g370477

Figure 154

1. Slotted nut
2. Cotter pin
3. Axle case-steering arm
4. Tie-rod end
5. Clamp
6. Nut and bolt

2. Separate the tie-rod end from the axle case-steering arm.
3. Loosen the clamps at both ends of the tie rods (Figure 154).
4. Rotate the detached ball joint inward or outward 1 complete revolution.
5. Tighten the clamp at the detached end of the tie rod.
6. Rotate the entire tie-rod assembly the same direction (inward or outward) 1 complete revolution.
7. Tighten the clamp at the connected end of the tie rod.
8. Assemble the tie-rod end to the axle case-steering arm with the slotted nut.
9. Measure the toe-in; refer to Checking the Rear-Wheel Alignment (page 79).
10. If needed, remove the slotted nut and repeat steps 2 through 9.
11. When the difference between the front and rear measurements are 3 mm (1/8 inch) less, tighten the slotted nut and install a new cotter pin.

Cooling System Maintenance

Cooling System Safety

- Swallowing engine coolant can cause poisoning; keep out of reach from children and pets.
- Discharge of hot, pressurized coolant or touching a hot radiator and surrounding parts can cause severe burns.
  - Always allow the engine to cool at least 15 minutes before removing the radiator cap.
  - Use a rag when opening the radiator cap, and open the cap slowly to allow steam to escape.

Coolant Specification

The coolant reservoir is filled at the factory with a 50/50 solution of water and ethylene glycol base extended-life coolant.

Important: **Use only commercially available coolants that meet the specifications listed in the Extended Life Coolant Standards Table.**

Do not use conventional (green) inorganic-acid technology (IAT) coolant in your machine. Do not mix conventional coolant with extended-life coolant.

Coolant Type Table

Ethylene-Glycol Coolant Type	Corrosion Inhibitor Type
Extended-life antifreeze	Organic-acid technology (OAT)

Important: **Do not rely on the color of the coolant to identify the difference between conventional (green) inorganic-acid technology (IAT) coolant and extended-life coolant.**

Coolant manufacturers may dye extended-life coolant in one of the following colors: red, pink, orange, yellow, blue, teal, violet, and green. Use coolant that meets the specifications in the Extended Life Coolant Standards Table.

Extended Life Coolant Standards

ATSM International	SAE International
D3306 and D4985	J1034, J814, and 1941

Important: **Coolant concentration should be a 50/50 mixture of coolant to water.**

- **Preferred:** When mixing coolant from a concentrate, mix it with distilled water.
- **Preferred option:** If distilled water is not available, use a pre-mix coolant instead of a concentrate.
- **Minimum requirement:** If distilled water and pre-mix coolant are not available, mix concentrated coolant with clean drinkable water.

Checking the Coolant Level

Service Interval: Before each use or daily

⚠ CAUTION

If the engine has been running, the pressurized, hot coolant can escape and cause burns.

- **Do not open the radiator cap when the engine is running.**
- **Use a rag when opening the radiator cap, and open the cap slowly to allow steam to escape.**

1. Prepare the machine for maintenance; refer to Checking the Coolant Level (page 81).
2. Open the hood, and wait for the engine to cool; refer to Opening the Hood (page 59).
3. Carefully remove the radiator cap (Figure 155).

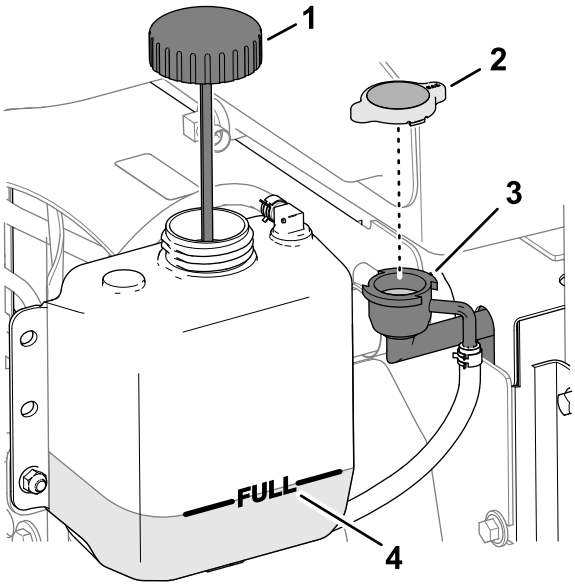

Figure 155

1. Cap (expansion tank)
2. Radiator cap
3. Neck
4. Full mark

4. Check the coolant level in the radiator.

   Note: The coolant level is correct if it is to the top of the filler neck of the radiator (Figure 155).
5. Check the coolant level in the expansion tank.

Note: The coolant level is correct if it is to the FULL mark of the expansion tank.

6. If the coolant is low, add the specified coolant to the radiator, expansion tank, or both; refer to Coolant Specification (page 81).
7. Install the radiator cap and the expansion-tank cap.
8. Close and latch the hood; refer to Closing the Hood (page 60).

Servicing the Engine Cooling System

Service Interval: Before each use or daily Clean them more frequently in dirty conditions.

1. Prepare the machine for maintenance; refer to Preparing for Maintenance (page 59).
2. Unlatch and open the rear screen (Figure 156).

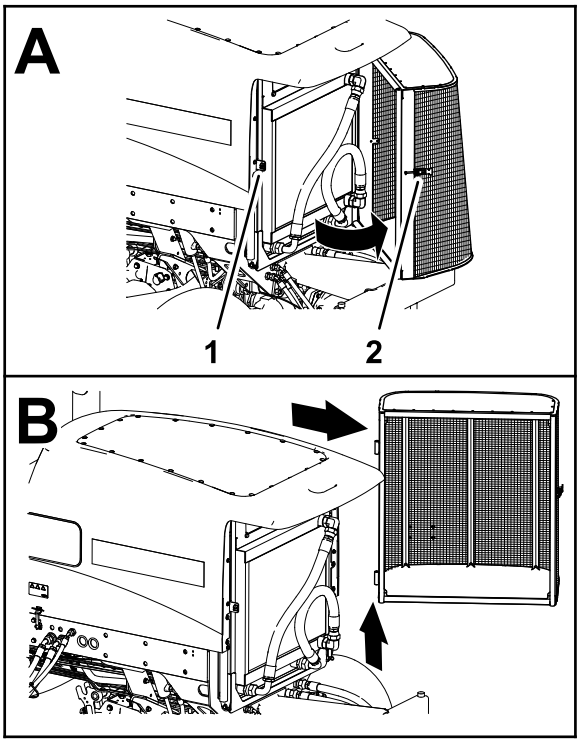

g370476

Figure 156

1. Latch keeper
2. Rear screen latch

3. Clean both sides of the screen.
4. Lift the screen off the hinge pins, and remove the screen from the machine.
5. Open the hood; refer to Opening the Hood (page 59).
6. Clean both sides of the oil cooler/radiator area (Figure 157) thoroughly with compressed air. Start from the front and blow the debris out toward the back. Then clean from the back side and blow toward the front. Repeat the procedure several times until all chaff and debris is removed.

Important: **Cleaning the oil cooler/radiator with water may promote premature corrosion damage to components and compact debris.**

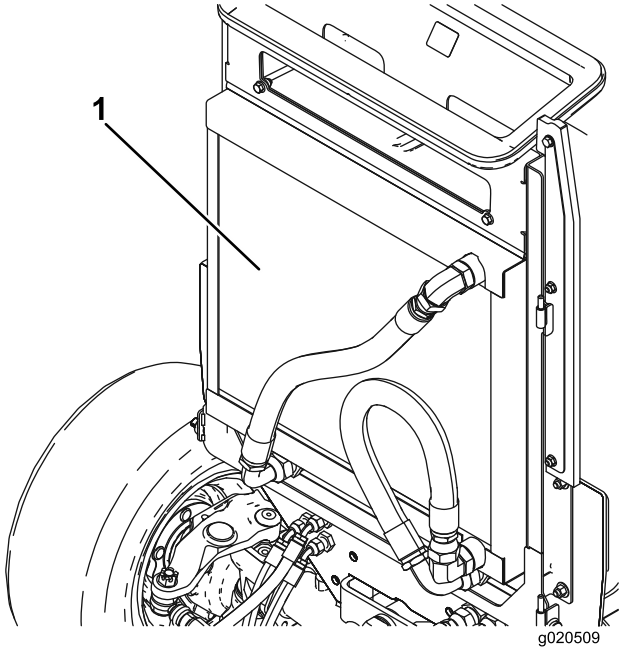

g020509

g020509

Figure 157

1. Oil cooler/radiator

7. Close and latch the hood, Closing the Hood (page 60).
8. Assemble the screen onto the hinge pins (Figure 158).

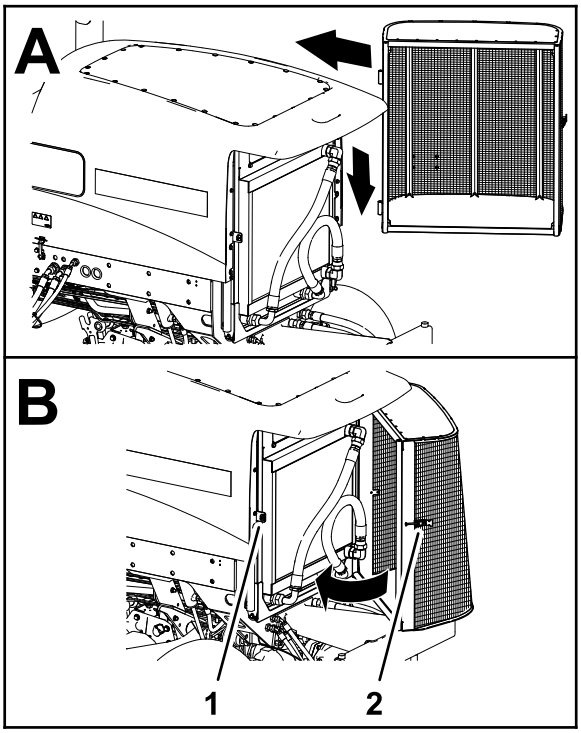

g370475

Figure 158

1. Latch keeper
2. Rear screen latch

9. Close and latch the screen.

Brake Maintenance

Adjusting the Service Brakes

Adjust the service brakes when there is more than 13 mm (1/2 inch) of free travel of the brake pedal, or if the brakes slip. Free travel is the distance the brake pedal moves before you feel braking-pedal resistance.

1. Prepare the machine for maintenance; refer to Preparing for Maintenance (page 59).
2. Disengage the pedal-locking latch between the brake pedals (Figure 159) so that both pedals work independently of each other.

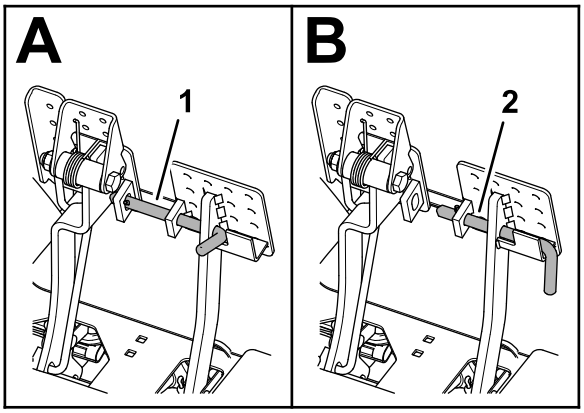

g370488

Figure 159

1. Brake pedals locked
2. Brake pedals unlocked

3. Loosen the front jam nut on the threaded end of the brake cable (Figure 160).

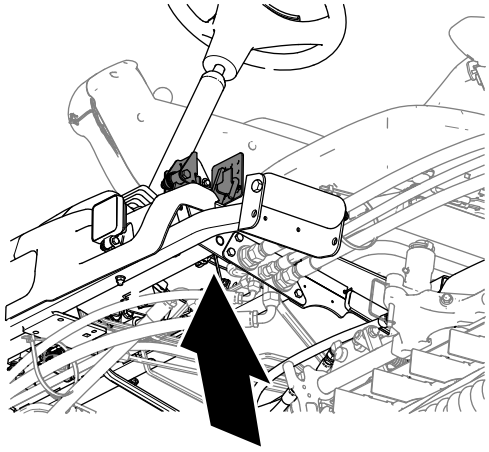

g370513

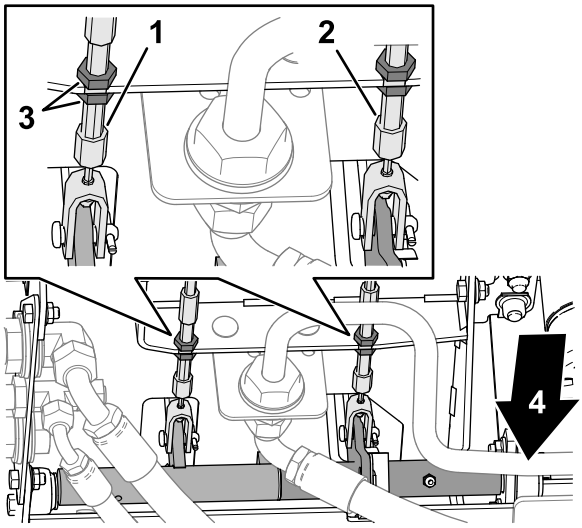

g370514

Figure 160

1. Left brake cable
2. Right brake cable
3. Jam nuts
4. Front of the machine

4. To reduce free travel of the brake pedals, tighten the rear jam nut to move the cable rearward until the brake pedals have 0 to 13 mm (0 to 1/2 inch) of free travel.

   Note: Ensure that there is no brake-cable tension when the pedal is released.

5. Tighten the front jam nut after the brakes are adjusted correctly.
6. If needed, repeat steps 3 through 5 at the other brake cable.

Belt Maintenance

Servicing the Alternator Belt

Service Interval: Every 100 hours

Check the condition and tension of the belts (Figure 161) after every 100 operating hours.

1. Park the machine on a level surface, lower the cutting units, engage the parking brake, shut off the engine, and remove the key.
2. Open the hood; refer to Opening the Hood (page 59).
3. Check the condition of the alternator belt.

   Note: Replace a worn or damaged belt.
4. Check the belt tension.

   Note: Belt tension is correct when the belt deflects 10 mm (3/8 inch) when a force of 45 N (10 lb) is applied on the belt midway between the pulleys.
5. If belt deflection is more than or less than 10 mm (3/8 inch), loosen the alternator mounting bolts (Figure 161).

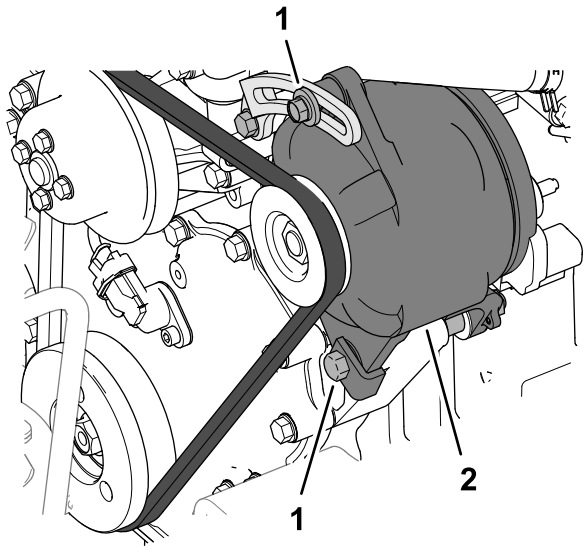

g370515

Figure 161

1. Mounting bolt
2. Alternator

6. Increase or decrease the alternator-belt tension, and tighten the mounting bolts.
7. Check the deflection of the belt again to ensure that the tension is correct.
8. Close and latch the hood; refer to Closing the Hood (page 60).

Hydraulic System Maintenance

Hydraulic System Safety

- Seek immediate medical attention if fluid is injected into skin. Injected fluid must be surgically removed within a few hours by a doctor.
- Ensure that all hydraulic-fluid hoses and lines are in good condition and all hydraulic connections and fittings are tight before applying pressure to the hydraulic system.
- Keep your body and hands away from pinhole leaks or nozzles that eject high-pressure hydraulic fluid.
- Use cardboard or paper to find hydraulic leaks.
- Safely relieve all pressure in the hydraulic system before performing any work on the hydraulic system.

Checking the Hydraulic Lines and Hoses

Service Interval: Before each use or daily

Check the hydraulic lines and hoses for leaks, kinked lines, loose mounting supports, wear, loose fittings, weather deterioration, and chemical deterioration. Make all necessary repairs before operating.

Hydraulic Fluid Specifications

The reservoir is filled at the factory with high-quality hydraulic fluid. Check the level of the hydraulic fluid before you first start the engine and daily thereafter; refer to Checking the Hydraulic-Fluid Level (page 85).

Recommended hydraulic fluid: Toro PX Extended Life Hydraulic Fluid; available in 19 L (5 US gallon) pails or 208 L (55 US gallon) drums.

Note: A machine using the recommended replacement fluid requires less frequent fluid and filter changes.

Alternative hydraulic fluids: If Toro PX Extended Life Hydraulic Fluid is not available, you may use another conventional, petroleum-based hydraulic fluid having specifications that fall within the listed range for all the following material properties and that it meets industry standards. Do not use synthetic fluid. Consult with your lubricant distributor to identify a satisfactory product.

Note: Toro does not assume responsibility for damage caused by improper substitutions, so use products only from reputable manufacturers who will stand behind their recommendation.

High Viscosity Index/Low Pour Point Anti-wear Hydraulic Fluid, ISO VG 46

Material Properties:

Viscosity, ASTM D445	cSt @ 40°C (104°F) 44 to 48
Viscosity Index ASTM D2270	140 or higher
Pour Point, ASTM D97	-37°C to -45°C (-34°F to -49°F)
Industry Specifications:	Eaton Vickers 694 (I-286-S, M-2950-S/35VQ25 or M-2952-S)

Note: Many hydraulic fluids are almost colorless, making it difficult to spot leaks. A red dye additive for the hydraulic fluid is available in 20 ml (0.67 fl oz) bottles. A bottle is sufficient for 15 to 22 L (4 to 6 US gallons) of hydraulic fluid. Order Part No. 44-2500 from your authorized Toro distributor.

Important: **Toro Premium Synthetic Biodegradable Hydraulic Fluid is the only synthetic biodegradable fluid approved by Toro. This fluid is compatible with the elastomers used in Toro hydraulic systems and is suitable for a wide-range of temperature conditions. This fluid is compatible with conventional mineral oils, but for maximum biodegradability and performance, the hydraulic system should be thoroughly flushed of conventional fluid. The oil is available in 19 L (5 US gallons) pails or 208 L (55 US gallons) from your authorized Toro distributor.**

Checking the Hydraulic-Fluid Level

Service Interval: Before each use or daily

The reservoir is filled at the factory with high-quality hydraulic fluid.

1. Prepare the machine for maintenance; refer to Preparing for Maintenance (page 59).
2. Clean the area around the filler neck and cap of the hydraulic tank (Figure 162).

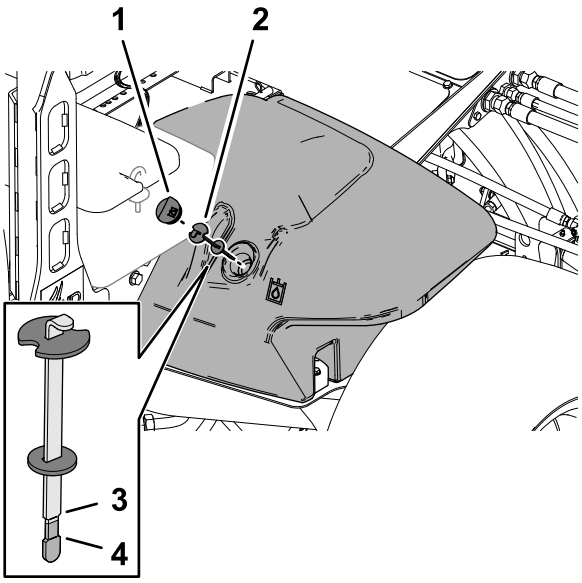

g370529

Figure 162

1. Hydraulic-tank cap
2. Dipstick
3. Full mark
4. Add mark

3. Remove the hydraulic-tank cap from the tank.
4. Remove the dipstick from the filler neck and wipe it with a clean rag.
5. Insert the dipstick into the filler neck; then remove it and check the fluid level.

   The correct hydraulic-fluid level is between the Full mark and the Add mark on the dipstick.
6. If the level is low, add the specified hydraulic fluid to raise the fluid level to the Full mark.
7. Install the dipstick and hydraulic-tank cap to the tank.

Replacing the Hydraulic Filters

Service Interval: Every 1,000 hours—**If you are using the recommended hydraulic fluid,** replace the hydraulic filters.

Every 800 hours—**If you are not using the recommended hydraulic fluid or have ever filled the reservoir with an alternative fluid,** replace the hydraulic filters.

Use the following Toro hydraulic filters:

Name	Toro Part No.	Location
Return filter	94-2621	Below the right frame channel.

Use the following Toro hydraulic filters: (cont'd.)

Charge filter	75-1310	Under the seat plate.
Important: **Using another type of filter may void the warranty on some components.**		

Replacing the Charge Filter

1. Prepare the machine for maintenance; refer to Preparing for Maintenance (page 59).
2. Tilt the seat; refer to Tilting the Seat (page 60).
3. Clean the area around the charge filter and filter head (Figure 163).

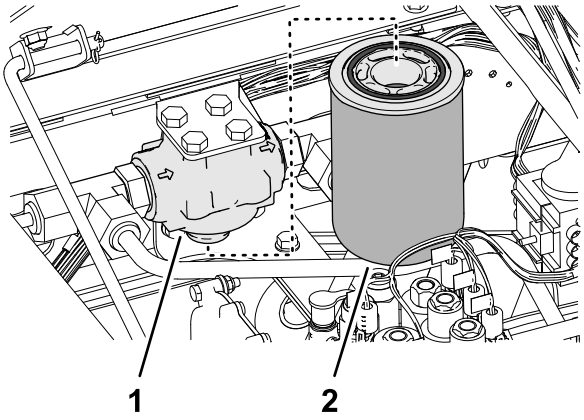

g370535

Figure 163

1. Charge-filter head
2. Charge filter

4. Align a drain pan under the filter, and remove the filter.
5. Wipe the filter mounting filter surface of the filter head with a clean rag.
6. Lubricate the new filter gasket and fill the filter with the specified hydraulic fluid; refer to Hydraulic Fluid Specifications (page 85).
7. Thread the filter onto the filter head until the gasket contacts the mounting plate, then tighten the filter an additional 1/2 turn.

Replacing the Return Filter

1. Clean the area around the return filter and filter head (Figure 164).

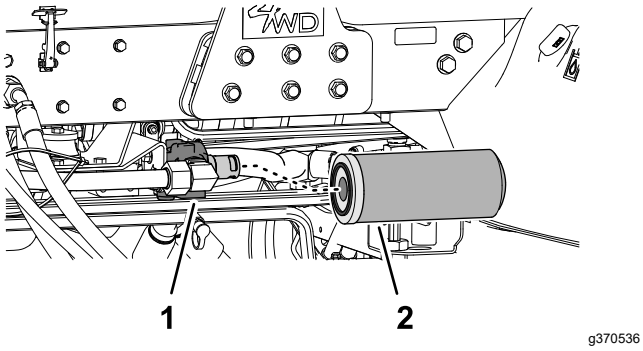

Figure 164

1. Return-filter head
2. Return filter

2. Align a drain pan under the return filter, and remove the filter.
3. Wipe the filter mounting filter surface of the filter head with a clean rag.
4. Lubricate the new filter gasket, fill the filter with the specified hydraulic fluid, and then drain the filter; refer to Hydraulic Fluid Specifications (page 85).
5. Thread the filter onto the filter head until the gasket contacts the mounting plate, then tighten the filter an additional 1/2 turn.

Purging Air from the Hydraulic System

1. Start the engine and let it run for about 2 minutes to purge air from the system.
2. Check around the filters and filter heads for hydraulic leaks.

   Note: Repair any hydraulic leaks.
3. Shut off the engine and remove the key.
4. Lower the seat; refer to Lowering the Seat (page 61).

Hydraulic Fluid Capacity

28.4 L (7.5 US gallons); refer to Hydraulic Fluid Specifications (page 85)

Changing the Hydraulic Fluid

Service Interval: Every 2,000 hours—**If you are using the recommended hydraulic fluid,** change the hydraulic fluid.

Every 800 hours—**If you are not using the recommended hydraulic fluid or have ever filled the reservoir with an alternative fluid,** change the hydraulic fluid.

Draining the Hydraulic Fluid

If the fluid becomes contaminated, contact your local authorized Toro distributor, because the system must be flushed. Contaminated fluid looks milky or black when compared to clean fluid.

Drain Pan Capacity: 30L (8 US gallons) or more

1. Prepare the machine for maintenance; refer to Preparing for Maintenance (page 59).
2. Open the hood; refer to Opening the Hood (page 59).
3. Align the drain pan under the hydraulic tank (Figure 165).

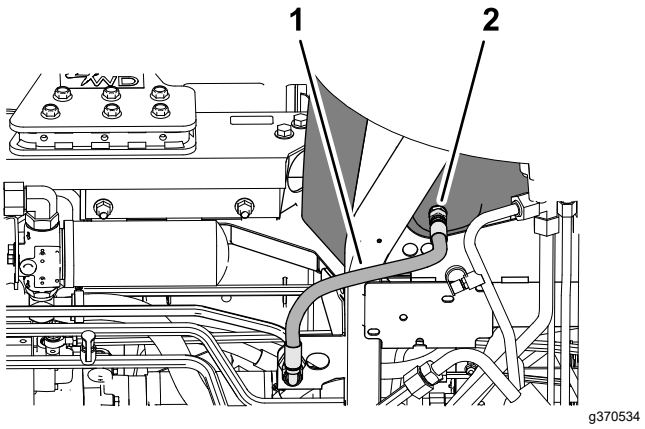

Figure 165

1. Case-return hose
2. Straight fitting (bottom of the hydraulic tank)

4. Disconnect the case-return hose from the straight fitting at the bottom of the tank, and drain hydraulic fluid.
5. When the hydraulic fluid stops draining, assemble the case-return hose to the tank fitting.
6. Torque the hose fitting to 50 to 63 N·m (37 to 47 ft-lb).

Filling the Hydraulic Tank

1. Fill the reservoir with the specified hydraulic fluid; refer to Hydraulic Fluid Specifications (page 85) and Hydraulic Fluid Capacity (page 87).

   Important: **Use only the hydraulic fluids specified. Other fluids could cause system damage.**

2. Install the dipstick and hydraulic-tank cap to the tank.

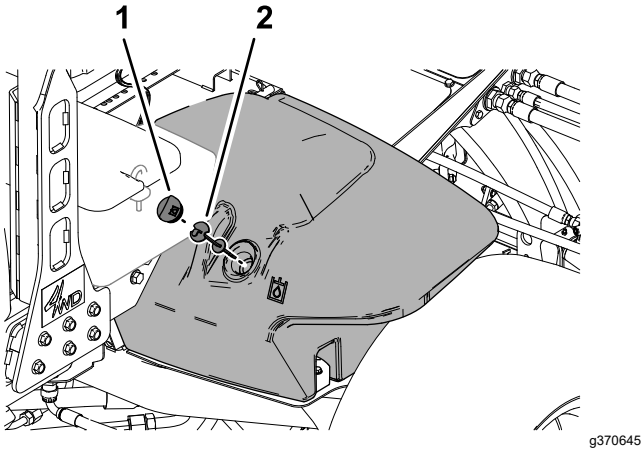

Figure 166

1. Hydraulic-tank cap
2. Dipstick

3. Start the engine and operate all the hydraulic controls to distribute hydraulic fluid throughout the system.
4. Check for hydraulic leaks, shut off the engine, and remove the key.

   Repair all hydraulic leaks.
5. Close and latch the hood; refer to Closing the Hood (page 60).
6. Check the fluid level; refer to Checking the Hydraulic-Fluid Level (page 85).

   Note: If needed, add enough to raise the level to the Full mark on the dipstick. Do not overfill the hydraulic tank.

Cutting Unit Maintenance

Blade Safety

A worn or damaged blade or bedknife can break, and a piece could be thrown toward you or bystanders, resulting in serious personal injury or death.

- Inspect the blades and bedknives periodically for excessive wear or damage.
- Use care when checking the blades. Wear gloves and use caution when servicing them. Only replace or backlap the blades and bedknives; never straighten or weld them.
- On machines with multiple cutting units, take care when rotating a cutting unit; it can cause the reels in the other cutting units to rotate.

Backlapping the Cutting Units

⚠ WARNING

Contact with the reels or other moving parts can result in personal injury.

- **Keep your fingers, hands, and clothing away from the reels or other moving parts.**
- **Never attempt to turn the reels by hand or foot while the engine is running.**

Note: Additional instructions and procedures on backlapping are available in the Toro *Sharpening Reel and Rotary Mowers Manual*, Form No. 80-300SL.

Preparing the Machine

- Park the machine on a level surface, lower the cutting units, engage the parking brake, shut off the engine, and move the PTO switch to the DISENGAGE position.
- Open the hood; refer to Opening the Hood (page 59).
- Make initial reel-to-bedknife adjustments appropriate for backlapping on all cutting units which are to be backlapped; refer to the cutting unit *Operator's Manual*.
- Rotate the front, rear, or both backlap levers to the R (backlap) position (Figure 167).

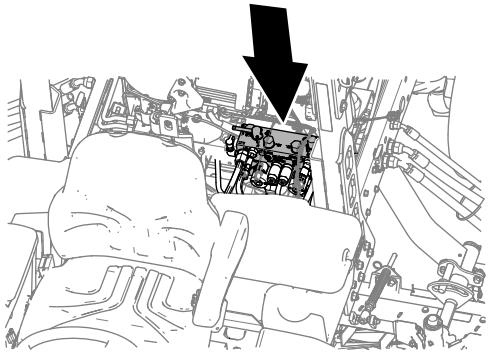

g370552

Figure 167

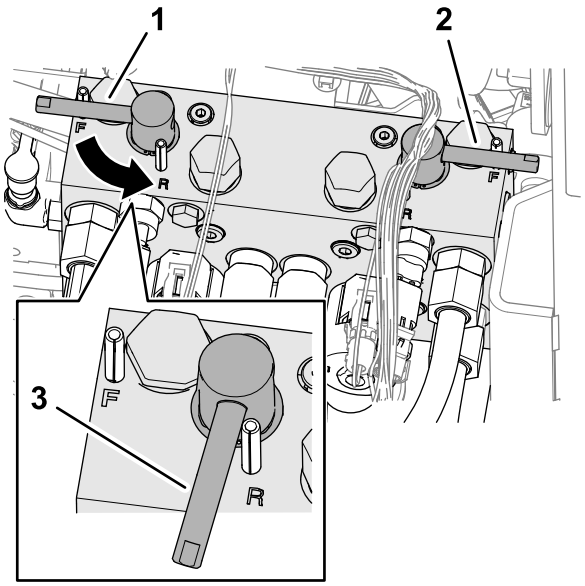

g370553

Figure 168

1. Backlap lever (front cutting units 4, 1, and 5)
2. Backlap lever (rear cutting units 2 and 3)
3. Reverse rotation (backlap)

Lapping the Reels and Bedknife

⚠ DANGER

Changing the engine speed while backlapping may cause the reels to stall.

- **Never change the engine speed while backlapping.**
- **Backlap only at low idle engine speed.**

Note: When backlapping, the front units all operate together, and the rear units operate together.

1. Ensure that the traction pedal is in the Neutral position and the parking brake is engaged.
2. Start the engine and run it at low-idle speed.
3. Rotate the lever for the mow-speed limiter forward to the MOW position (Figure 169).

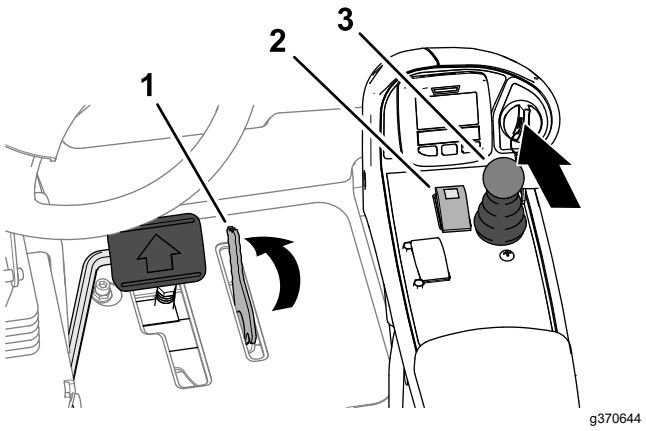

g370644

Figure 169

1. Mow-speed limiter
2. PTO switch
3. Lower mow/raise control lever

4. Press the PTO switch to the ENGAGE position.
5. Move the lower mow/raise control lever forward.

   Note: The reels you set for backlapping run backward.
6. Apply lapping compound to the reels with a long-handled brush.

⚠ DANGER

Contacting the cutting units when they are moving could cause personal injury.

- **Do not use a short-handled brush.**
- **To avoid personal injury, be certain that you are clear of the cutting units before proceeding.**

7. If the reels stall or become erratic while backlapping, increase the throttle speed until the reel stabilizes.
8. If you need to make an adjustment to the cutting units while backlapping, perform the following steps:
   A. Move the lower mow/raise control lever rearward.

      Note: The cutting units shut off, but do not raise.

   B. Press the PTO switch to the DISENGAGE position.
   C. Shut off the engine and remove the key.
   D. Adjust the cutting units.
   E. Repeat steps 2 through 7.
9. Repeat step 6 for all cutting units that you want to backlap.

Finishing Backlapping

Important: **If you do not return the backlap switch to the OFF position after backlapping, the cutting units will not raise or function properly.**

1. Shut off the engine and remove the key.
2. Wash all lapping compound off from the cutting units.
3. Adjust the cutting unit reel-to-bedknife as needed.
4. Rotate the backlap levers to the F (mow) position.

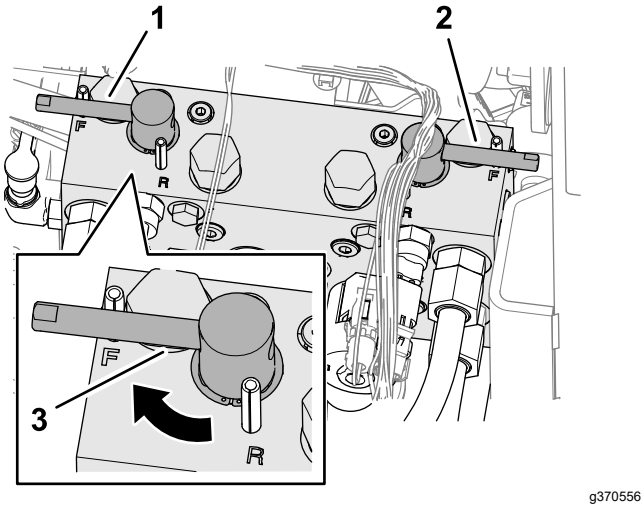

g370556

Figure 170

1. Backlap lever (front cutting units 4, 1, and 5)
2. Backlap lever (rear cutting units 2 and 3)
3. Forward rotation (mow)

5. For a better cutting edge, run a file across the front face of the bedknife after lapping.

   Note: This removes any burrs or rough edges that may have built up on the cutting edge.
6. Close and latch the hood; refer to Closing the Hood (page 60).

Extended Maintenance

Chassis and Engine

Service Interval: Every 2 years—Replace the hydraulic hoses.

Every 2 years—Replace the coolant hoses.

Every 2 years—Flush and replace the coolant.

Cleaning

Washing the Machine

Wash the machine as needed using water alone or with a mild detergent. You may use a rag when washing the machine.

Important: **Do not use brackish or reclaimed water to clean the machine.**

Important: **Do not use power-washing equipment to wash the machine. Power-washing equipment may damage the electrical system, loosen important decals, or wash away necessary grease at friction points. Avoid excessive use of water near the control panel, engine, and battery.**

Important: **Do not wash the machine with the engine running. Washing the machine with the engine running may result in internal engine damage.**

Storage

Storage Safety

- Before you leave the operator's position, do the following:
  - Park the machine on a level surface.
  - Disengage and lower the cutting units.
  - Engage the parking brake.
  - Shut off the engine and remove the key.
  - Wait for all movement to stop.
  - Allow the machine to cool before adjusting, servicing, cleaning, or storing it.
- Do not store the machine or fuel container where there is an open flame, spark, or pilot light, such as on a water heater or other appliance.

Preparing the Traction Unit

1. Park the machine on a level surface, lower the cutting units, engage the parking brake, shut off the engine, and remove the key.
2. Thoroughly clean the traction unit, cutting units, and the engine.
3. Check the tire pressure; refer to Checking the Tire Air Pressure (page 73).
4. Check all fasteners for looseness; tighten them as necessary.
5. Grease or oil all grease fittings and pivot points. Wipe up any excess lubricant.
6. Lightly sand and use touch-up paint on painted areas that are scratched, chipped, or rusted. Repair any dents in the metal body.
7. Service the battery and cables as follows; refer to Electrical System Safety (page 71):
   A. Remove the battery terminals from the battery posts.
   B. Clean the battery, terminals, and posts with a wire brush and baking-soda solution.
   C. Coat the cable terminals and battery posts with Grafo 112X skin-over grease (Toro Part No. 505-47) or petroleum jelly to prevent corrosion.
   D. Slowly charge the battery every 60 days for 24 hours to prevent lead sulfation of the battery.

Preparing the Engine

1. Drain the engine oil from the oil pan and install the drain plug.
2. Remove and discard the oil filter. Install a new oil filter.
3. Fill the engine with specified motor oil.
4. Start the engine and run it at idle speed for approximately 2 minutes.
5. Shut off the engine and remove the key.
6. Flush the fuel tank with fresh, clean fuel.
7. Secure all the fuel-system fittings.
8. Thoroughly clean and service the air-cleaner assembly.
9. Seal the air-cleaner inlet and the exhaust outlet with weatherproof tape.
10. Check the antifreeze protection and add a 50/50 solution of water and ethylene glycol antifreeze as needed for the expected minimum temperature in your area.

Storing the Battery

If you are storing the machine for more than 30 days, remove the battery and charge it fully. Either store it on the shelf or on the machine. Leave the cables disconnected if they are stored on the machine. Store the battery in a cool atmosphere to avoid quick deterioration of the charge in the battery. To prevent the battery from freezing, ensure that it is fully charged. The specific gravity of a fully charged battery is 1.265 to 1.299.

Notes:

EEA/UK Privacy Notice

Toro's Use of Your Personal Information

The Toro Company ("Toro") respects your privacy. When you purchase our products, we may collect certain personal information about you, either directly from you or through your local Toro company or dealer. Toro uses this information to fulfil contractual obligations - such as to register your warranty, process your warranty claim or to contact you in the event of a product recall - and for legitimate business purposes - such as to gauge customer satisfaction, improve our products or provide you with product information which may be of interest. Toro may share your information with our subsidiaries, affiliates, dealers or other business partners in connection these activities. We may also disclose personal information when required by law or in connection with the sale, purchase or merger of a business. We will never sell your personal information to any other company for marketing purposes.

Retention of your Personal Information

Toro will keep your personal information as long as it is relevant for the above purposes and in accordance with legal requirements. For more information about applicable retention periods please contact legal@toro.com.

Toro's Commitment to Security

Your personal information may be processed in the US or another country which may have less strict data protection laws than your country of residence. Whenever we transfer your information outside of your country of residence, we will take legally required steps to ensure that appropriate safeguards are in place to protect your information and to make sure it is treated securely.

Access and Correction

You may have the right to correct or review your personal data, or object to or restrict the processing of your data. To do so, please contact us by email at legal@toro.com. If you have concerns about the way in which Toro has handled your information, we encourage you to raise this directly with us. Please note that European residents have the right to complain to your Data Protection Authority.

California Proposition 65 Warning Information

What is this warning?

You may see a product for sale that has a warning label like the following:



WARNING: Cancer and Reproductive Harm—www.p65Warnings.ca.gov.

What is Prop 65?

Prop 65 applies to any company operating in California, selling products in California, or manufacturing products that may be sold in or brought into California. It mandates that the Governor of California maintain and publish a list of chemicals known to cause cancer, birth defects, and/or other reproductive harm. The list, which is updated annually, includes hundreds of chemicals found in many everyday items. The purpose of Prop 65 is to inform the public about exposure to these chemicals.

Prop 65 does not ban the sale of products containing these chemicals but instead requires warnings on any product, product packaging, or literature with the product. Moreover, a Prop 65 warning does not mean that a product is in violation of any product safety standards or requirements. In fact, the California government has clarified that a Prop 65 warning "is not the same as a regulatory decision that a product is 'safe' or 'unsafe.'" Many of these chemicals have been used in everyday products for years without documented harm. For more information, go to https://oag.ca.gov/prop65/faqs-view-all.

A Prop 65 warning means that a company has either (1) evaluated the exposure and has concluded that it exceeds the "no significant risk level"; or (2) has chosen to provide a warning based on its understanding about the presence of a listed chemical without attempting to evaluate the exposure.

Does this law apply everywhere?

Prop 65 warnings are required under California law only. These warnings are seen throughout California in a wide range of settings, including but not limited to restaurants, grocery stores, hotels, schools, and hospitals, and on a wide variety of products. Additionally, some online and mail order retailers provide Prop 65 warnings on their websites or in catalogs.

How do the California warnings compare to federal limits?

Prop 65 standards are often more stringent than federal and international standards. There are various substances that require a Prop 65 warning at levels that are far lower than federal action limits. For example, the Prop 65 standard for warnings for lead is 0.5 µg/day, which is well below the federal and international standards.

Why don't all similar products carry the warning?

- Products sold in California require Prop 65 labelling while similar products sold elsewhere do not.
- A company involved in a Prop 65 lawsuit reaching a settlement may be required to use Prop 65 warnings for its products, but other companies making similar products may have no such requirement.
- The enforcement of Prop 65 is inconsistent.
- Companies may elect not to provide warnings because they conclude that they are not required to do so under Prop 65; a lack of warnings for a product does not mean that the product is free of listed chemicals at similar levels.

Why does Toro include this warning?

Toro has chosen to provide consumers with as much information as possible so that they can make informed decisions about the products they buy and use. Toro provides warnings in certain cases based on its knowledge of the presence of one or more listed chemicals without evaluating the level of exposure, as not all the listed chemicals provide exposure limit requirements. While the exposure from Toro products may be negligible or well within the "no significant risk" range, out of an abundance of caution, Toro has elected to provide the Prop 65 warnings. Moreover, if Toro does not provide these warnings, it could be sued by the State of California or by private parties seeking to enforce Prop 65 and subject to substantial penalties.

The Toro Warranty

Two-Year or 1,500 Hours Limited Warranty

Conditions and Products Covered

The Toro Company warrants your Toro Commercial product (“Product”) to be free from defects in materials or workmanship for 2 years or 1,500 operational hours*, whichever occurs first. This warranty is applicable to all products with the exception of Aerators (refer to separate warranty statements for these products). Where a warrantable condition exists, we will repair the Product at no cost to you including diagnostics, labor, parts, and transportation. This warranty begins on the date the Product is delivered to the original retail purchaser.
* Product equipped with an hour meter.

Instructions for Obtaining Warranty Service

You are responsible for notifying the Commercial Products Distributor or Authorized Commercial Products Dealer from whom you purchased the Product as soon as you believe a warrantable condition exists. If you need help locating a Commercial Products Distributor or Authorized Dealer, or if you have questions regarding your warranty rights or responsibilities, you may contact us at:

Toro Commercial Products Service Department
8111 Lyndale Avenue South
Bloomington, MN 55420-1196

952–888–8801 or 800–952–2740
E-mail: commercial.warranty@toro.com

Owner Responsibilities

As the product owner, you are responsible for required maintenance and adjustments stated in your *Operator's Manual*. Repairs for product issues caused by failure to perform required maintenance and adjustments are not covered under this warranty.

Items and Conditions Not Covered

Not all product failures or malfunctions that occur during the warranty period are defects in materials or workmanship. This warranty does not cover the following:

- Product failures which result from the use of non-Toro replacement parts, or from installation and use of add-on, or modified non-Toro branded accessories and products.
- Product failures which result from failure to perform recommended maintenance and/or adjustments.
- Product failures which result from operating the Product in an abusive, negligent, or reckless manner.
- Parts consumed through use that are not defective. Examples of parts which are consumed, or used up, during normal Product operation include, but are not limited to, brake pads and linings, clutch linings, blades, reels, rollers and bearings (sealed or greasable), bed knives, spark plugs, castor wheels and bearings, tires, filters, belts, and certain sprayer components such as diaphragms, nozzles, flow meters, and check valves.
- Failures caused by outside influence, including, but not limited to, weather, storage practices, contamination, use of unapproved fuels, coolants, lubricants, additives, fertilizers, water, or chemicals.
- Failure or performance issues due to the use of fuels (e.g. gasoline, diesel, or biodiesel) that do not conform to their respective industry standards.
- Normal noise, vibration, wear and tear, and deterioration. Normal “wear and tear” includes, but is not limited to, damage to seats due to wear or abrasion, worn painted surfaces, scratched decals or windows.

Parts

Parts scheduled for replacement as required maintenance are warranted for the period of time up to the scheduled replacement time for that part. Parts replaced under this warranty are covered for the duration of the original product warranty and become the property of Toro. Toro will make the final decision whether to repair any existing part or assembly or replace it. Toro may use remanufactured parts for warranty repairs.

Deep Cycle and Lithium-Ion Battery Warranty

Deep cycle and Lithium-Ion batteries have a specified total number of kilowatt-hours they can deliver during their lifetime. Operating, recharging, and maintenance techniques can extend or reduce total battery life. As the batteries in this product are consumed, the amount of useful work between charging intervals will slowly decrease until the battery is completely worn out. Replacement of worn out batteries, due to normal consumption, is the responsibility of the product owner. Note: (Lithium-Ion battery only): Refer to the battery warranty for additional information.

Lifetime Crankshaft Warranty (ProStripe 02657 Model Only)

The Prostripe which is fitted with a genuine Toro Friction Disc and Crank-Safe Blade Brake Clutch (integrated Blade Brake Clutch (BBC) + Friction Disc assembly) as original equipment and used by the original purchaser in accordance with recommended operating and maintenance procedures, are covered by a Lifetime Warranty against engine crankshaft bending. Machines fitted with friction washers, Blade Brake Clutch (BBC) units and other such devices are not covered by the Lifetime Crankshaft Warranty.

Maintenance is at Owner’s Expense

Engine tune-up, lubrication, cleaning and polishing, replacement of filters, coolant, and completing recommended maintenance are some of the normal services Toro products require that are at the owner’s expense.

General Conditions

Repair by an Authorized Toro Distributor or Dealer is your sole remedy under this warranty.

The Toro Company is not liable for indirect, incidental or consequential damages in connection with the use of the Toro Products covered by this warranty, including any cost or expense of providing substitute equipment or service during reasonable periods of malfunction or non-use pending completion of repairs under this warranty. Except for the Emissions warranty referenced below, if applicable, there is no other express warranty. All implied warranties of merchantability and fitness for use are limited to the duration of this express warranty.

Some states do not allow exclusions of incidental or consequential damages, or limitations on how long an implied warranty lasts, so the above exclusions and limitations may not apply to you. This warranty gives you specific legal rights, and you may also have other rights which vary from state to state.

Note Regarding Emissions Warranty

The Emissions Control System on your Product may be covered by a separate warranty meeting requirements established by the U.S. Environmental Protection Agency (EPA) and/or the California Air Resources Board (CARB). The hour limitations set forth above do not apply to the Emissions Control System Warranty. Refer to the Engine Emission Control Warranty Statement supplied with your product or contained in the engine manufacturer’s documentation.

Countries Other than the United States or Canada

Customers who have purchased Toro products exported from the United States or Canada should contact their Toro Distributor (Dealer) to obtain guarantee policies for your country, province, or state. If for any reason you are dissatisfied with your Distributor's service or have difficulty obtaining guarantee information, contact your Authorized Toro Service Center.