FORM NO. 3311-638 Rev. A

TORO®

MODEL NO. 08870-00001 THRU 10001 & UP

PARTS CATALOG

SAND PRO®

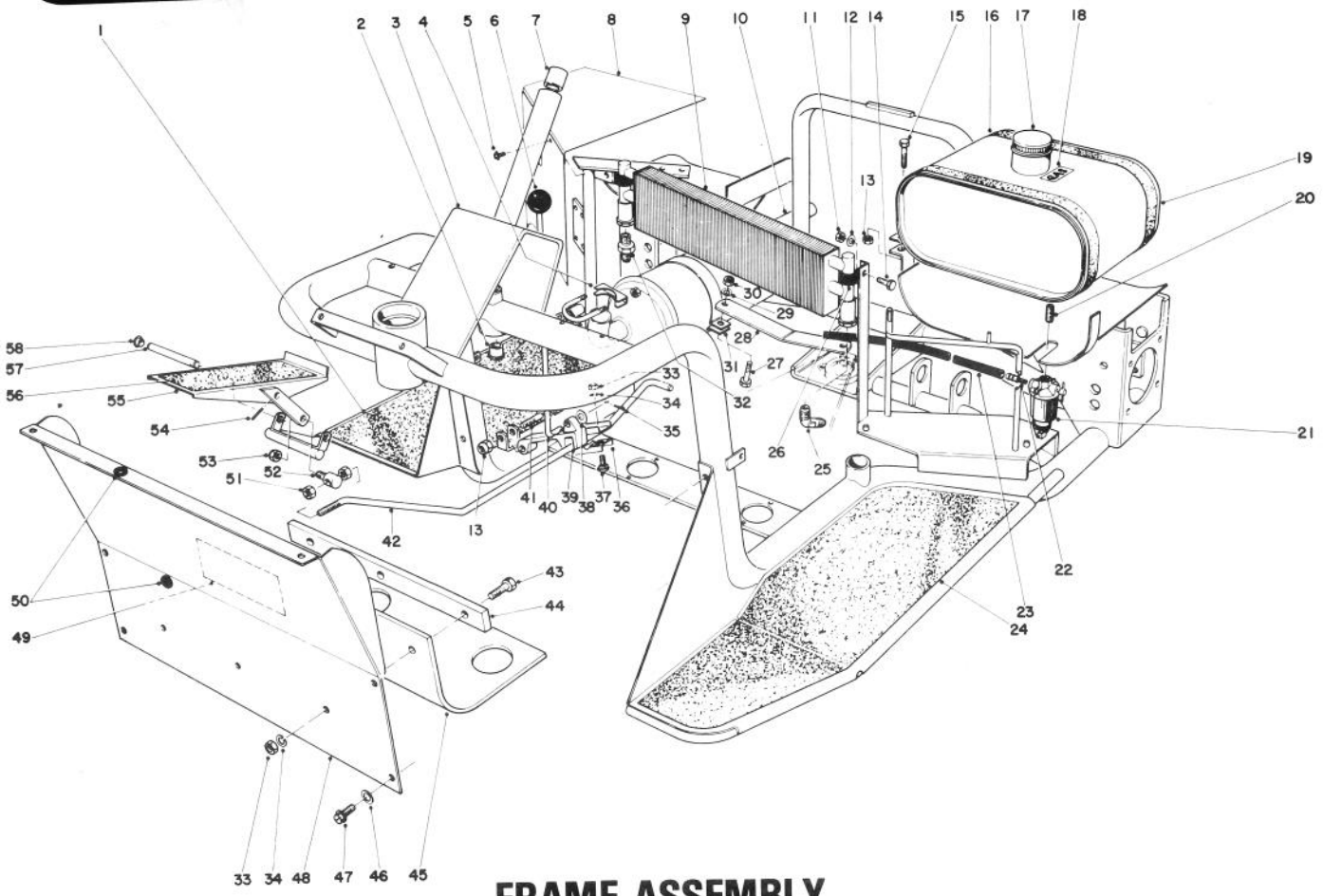

FRAME ASSEMBLY

Ref. No.	Part No.	Description	No. Used
1	18-7050	Foot Rest Pad R.H.	1
2	256-155	Bushing	2
3	27-9410	Frame (Incl. Ref. #2 & 7)	1
4	2412-37	Muffler Clamp Assembly	1
5	32104-60	Screw Self Tapping	3
6	233-32	Knob	1
7	256-185	Bushing	1
8	18-7130	Valve Shroud	1
9	22-7320	Oil Cooler	1
10	19-7370	Muffler	1
*	37-8510	Exhaust Muffler, Spark Arresting	1
11	3217-7	Nut	2
12	3253-21	Lockwasher	2
13	32152-2	Locknut	3

Ref. No.	Part No.	Description	No. Used
14	323-6	Capscrew	2
15	323-11	Capscrew	2
16	18-6850	Felt Strip	2
17	222-8	Gas Cap	1
18	18-7040	Decal Gas	1
19	17-4730	Gas Tank (Incl. Ref. #17)	1
20	289-26	Nipple	1
21	224-1	Sediment Bowl	1
22	304-73	Fitting	1
23	18-6870	Gas Line	1
24	18-7060	Foot Rest Pad L.H.	1
25	353-510	Fitting	1
26	2412-39	Clamp	2
27	321-8	Capscrew	1
28	21-5330	Bracket Muffler	1

*Not Illustrated (Optional)

COPYRIGHT © ALL RIGHTS RESERVED
The Toro Company — 1980
MINNEAPOLIS, MN 55420 — U.S.A.

PRICE $1.00

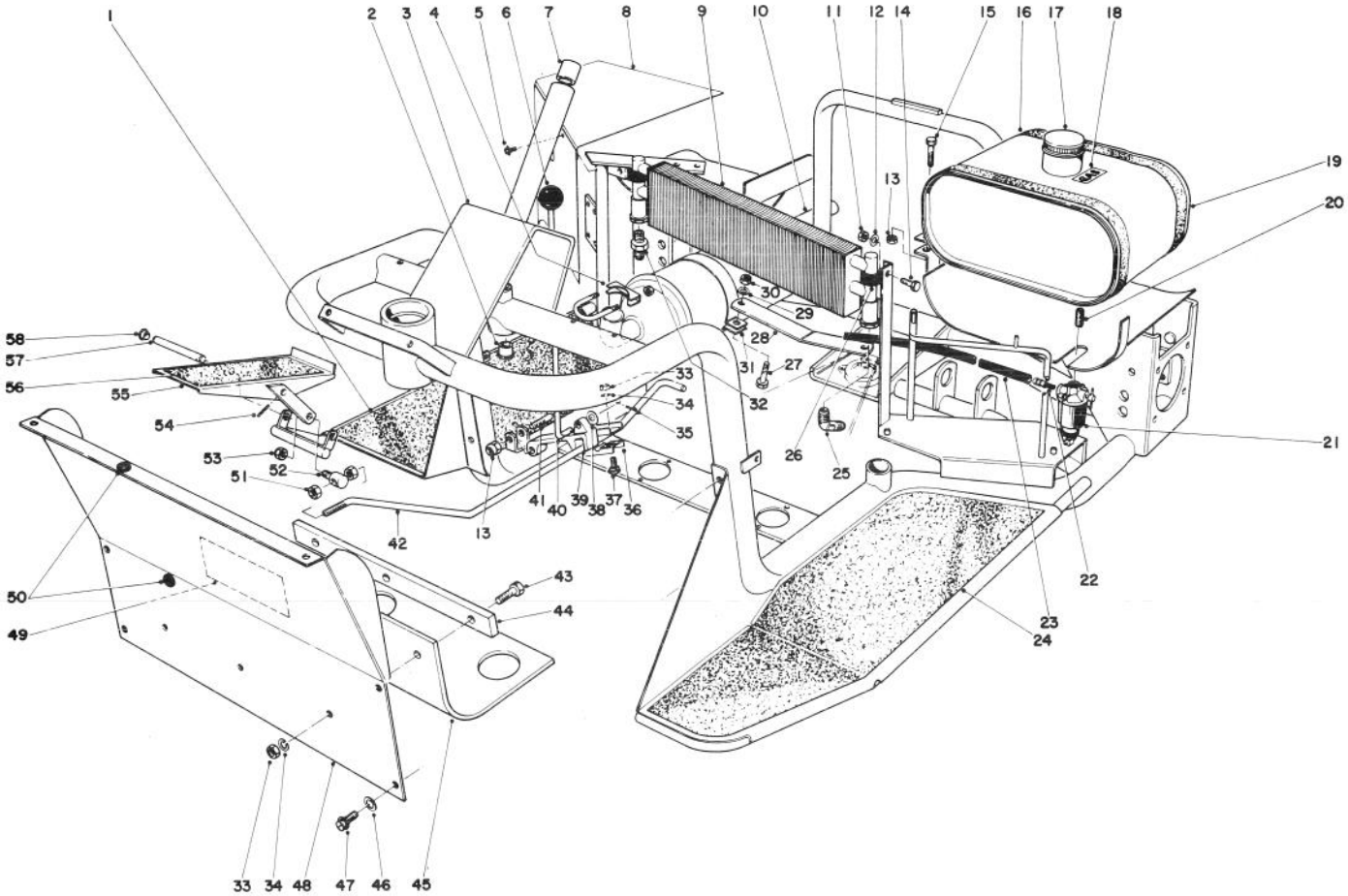

FRAME ASSEMBLY (Continued)

Ref. No.	Part No.	Description	No. Used
29	3253-3	Lockwasher	1
30	3217-5	Nut	1
31	18-7880	Clamp Muffler	1
32	353-460	Straight Adapter Fitting	1
33	3217-6	Nut	5
34	3253-4	Lockwasher	5
35	3272-4	Cotter Pin	1
36	19-2830	Stop-Reverse Lockout	1
37	3230-10	Carriage Bolt	2
38	3256-22	Washer	1
39	18-7940	Latch – Reverse Lockout	1
40	18-7950	Lever Lockout	1
41	323-10	Capscrew	1
42	21-5340	Pump Control Rod	1
43	322-3	Capscrew	3

Ref. No.	Part No.	Description	No. Used
44	19-8600	Retainer – Rubber Sheild	1
45	19-8590	Rubber Shield	1
46	3256-2	Flat Washer	6
47	32140-79	Self Tapping Screw	6
48	22-7420	Shield – Upper Front	1
49	19-8580	Decal – Caution Flywheel	1
50	237-88	Grommet	2
51	3218-4	Jam Nut	2
52	18-6650	Nut – Adjuster	1
53	32153-2	Locknut	1
54	32121-74	Roll Pin	1
55	18-6600	Pedal	1
56	18-7070	Foot Pedal Pad	1
57	18-6640	Pivot Rod Pedal	1
58	256-116	Bushing	2

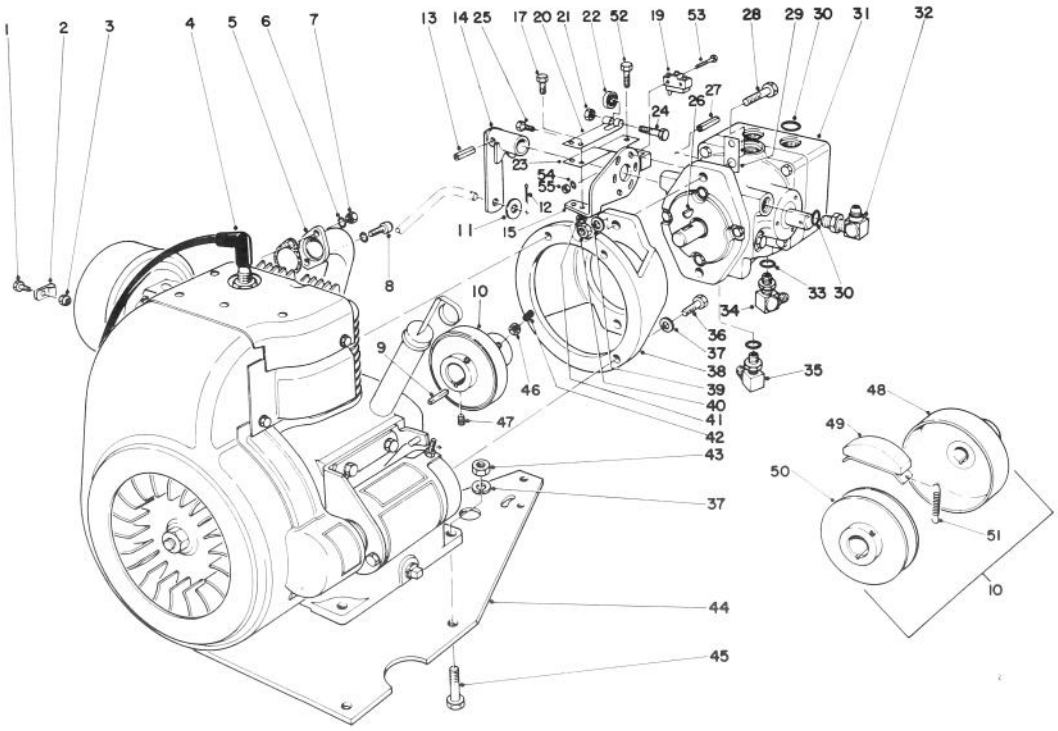

ENGINE ASSEMBLY

Ref. No.	Part No.	Description	No. Used
1	3290-134	Hex Hd. Machine Screw	1
2	2412-31	Clip Wire	1
3	3296-2	Locknut	1
4	221-507	Engine (Kohler Model No. K181S Type No. 30658D)	1
5	26-0050	Exhaust Pipe	1
6	3253-4	Lockwasher	2
7	3217-6	Nut	1
8	3274-10	Hex Sprocket Capscrew	1
9	18-6430	Square Key	1
10	26-2100	Clutch Centrifugal	1
11	3256-25	Washer	1
12	3272-21	Cotter Pin	1
13	32121-24	Roll Pin	1
14	26-2810	Pump Lever	1
15	29-6120	Pump Plate	1
17	321-4	Capscrew	2
19	29-6160	Micro Switch	1
20	29-6170	Spring Leaf	1
21	3296-29	Lock Nut	1
22	251-259	Bearing	1
23	29-6150	Spring Leaf	1
24	322-17	Hex Hd. Capscrew	1
25	32104-42	Hex Hd. Self Tapping Screw	3
26	3257-32	Woodruff Key	1
27	32121-16	Roll Pin	1
28	325-7	Capscrew	2

Ref. No.	Part No.	Description	No. Used
29	26-2950	Wire Stand Off	1
30	237-79	O-Ring	3
31	37-8040	Pump	1
32	353-371	90° Adj. Elbow	1
33	237-42	O-Ring	2
34	353-374	90° Adj. Elbow	1
35	353-511	90° Adj. Elbow	1
36	323-6	Capscrew	4
37	3253-5	Lockwasher	6
38	37-8030	Pump Mount	1
39	3253-7	Lockwasher	2
40	3217-9	Hex Nut	2
41	3296-42	Locknut	2
42	3247-4	Set Screw	2
43	3217-7	Nut	2
44	18-6490	Engine Base	1
45	323-8	Capscrew	2
46	3218-3	Jam Nut	2
47	3246-16	Set Screw	2
48	26-7080	Drum	1
49	26-6950	Shoe	2
50	26-7090	Plate Assembly	1
51	26-7220	Spring	2
52	3210-7	Capscrew	1
53	3249-11	Rd. Hd. Machine Screw	2
54	3254-9	Lockwasher	2
55	3217-16	Nut	2

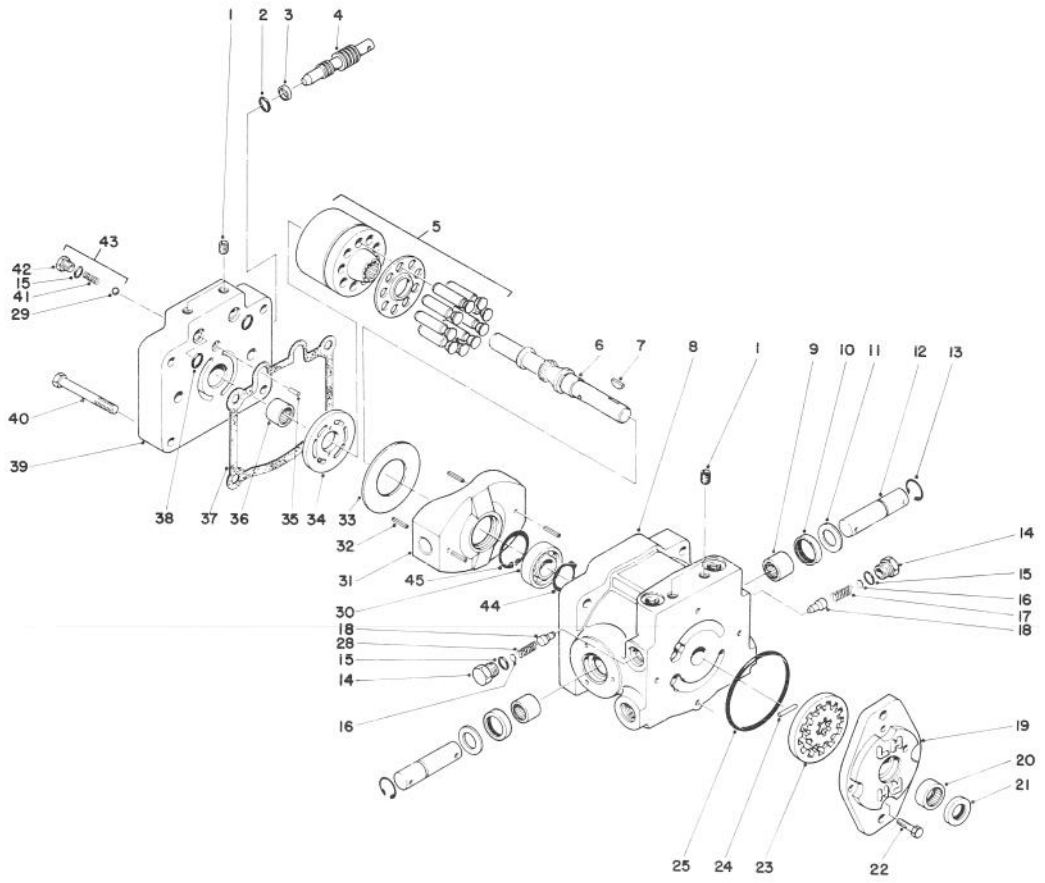

PUMP ASSEMBLY NO. 37-8040

Ref. No.	Part No.	Description	No. Used
1	285-17	Pipe Plug	4
2	237-22	O-Ring	1
3	25-2630	Back-Up Ring	1
4	25-2620	By-Pass Valve	1
5	25-2600	Cylinder Block Kit	1
6	36-5370	Pump Shaft	1
7	3257-32	Woodruff Key	1
8	36-7470	Pump Case	1
9	252-82	Needle Bearing	2
10	25-3210	Lip Seal	2
11	25-2510	Washer	2
12	25-2580	Trunnion Shaft	2
13	32151-46	Retaining Ring	2
14	25-2460	Hex Hd. Plug	2
15	237-86	O-Ring	4
16	25-2470	Shim Pack	A/R
17	25-2570	Relief Valve Spring	1
18	25-2560	Relief Valve Cone	2
19	25-2690	Charge Pump Housing	1
20	252-87	Needle Bearing	1
21	253-44	Lip Seal	1
22	322-4	Capscrew	4

Ref. No.	Part No.	Description	No. Used
23	25-2680	Gerotor Assembly	1
24	25-2530	Headless Straight Pin	1
25	237-95	O-Ring	1
28	25-2480	Charge Relief Spring	1
29	25-2490	Check Valve Ball	2
30	251-8	Ball Bearing	1
31	25-2450	Swashplate	1
32	32121-91	Coiled Spring Pin	4
33	25-2380	Thrust Plate	1
34	25-2390	Valve Plate	1
35	25-2430	Pin Straight Headless	1
36	25-3300	Needle Bearing	1
37	25-2400	Gasket	1
38	237-30	O-Ring	2
39	25-2670	End Cap	1
40	323-11	Hex Hd. Capscrew	4
41	25-2640	Check Valve Spring	2
42	25-2650	Check Valve Plug	2
43	25-3180	Check Valve Kit	2
44	32120-15	Retaining Ring	1
45	32120-11	Retaining Ring	1

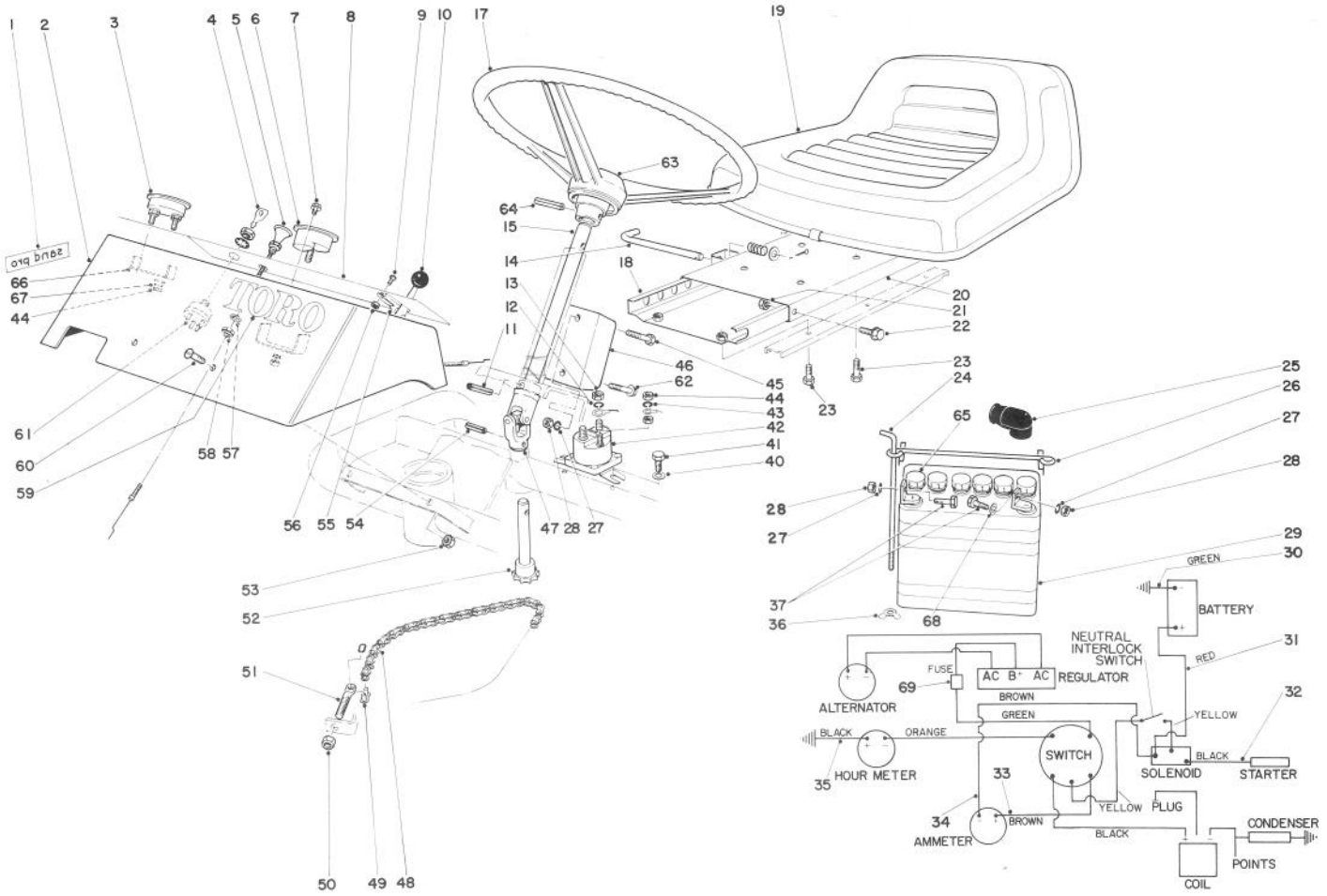

INSTRUMENT PANEL AND WIRING DIAGRAM

Ref. No.	Part No.	Description	No. Used
1	18-7020	Decal – Sand Pro	2
2	19-2110	Dash	1
3	33-0990	Ammeter	1
4	218-412	Key (Set of 2)	1
5	19-2090	Choke Control (Incl.Ref. #58)	1
6	12-9990	Hour Meter	1
7	32144-11	Screw Thread Forming	2
8	19-2120	Decal	1
9	3251-2	Machine Screw	2
10	233-25	Knob	1
11	32121-9	Roll Pin	1
12	3253-4	Lockwasher	6
13	3218-13	Nut – Brass	4
14	351-52	Plunger Assembly	1
15	25-8140	Steering Shaft	1
17	25-6260	Steering Wheel	1
18	351-36	Lower Slide Assembly	1
19	27-5170	Seat	1
20	351-53	Upper Slide Assembly	1
21	3218-1	Jam Nut	2
22	321-2	Capscrew	2
23	322-2	Capscrew	8
24	7-3328	Bolt-Battery	2

Ref. No.	Part No.	Description	No. Used
25	218-331	Battery Boot	2
26	7-0534	Battery Clamp Assembly	1
27	3253-3	Lockwasher	4
28	3217-5	Nut	4
29	28-1400	Battery	1
30	10-7160	Wire Battery to Ground	1
31	18-7840	Wire Solenoid to Battery	1
32	18-6560	Wire Solenoid to Starter	1
33	39-3730	Wiring Harness (Incl. Ref. #69)	1
34	18-7830	Wire Solenoid to Neg. Ammeter	1
35	18-6580	Hour Meter to Ground	1
36	32103-12	Wing Nut	2
37	321-3	Capscrew	2
40	3256-22	Washer	2
41	32140-79	Hex. Hd. Thread Cutting Screw	2
42	6-1600	Solenoid	1
43	3253-17	Lockwasher	1
44	3219-14	Jam Nut	4
45	321-5	Capscrew	1
46	218-452	Rectifier	1
47	25-8160	U-Joint	1
48	18-6370	Chain	1
49	2710-31	Chain Connecting	2

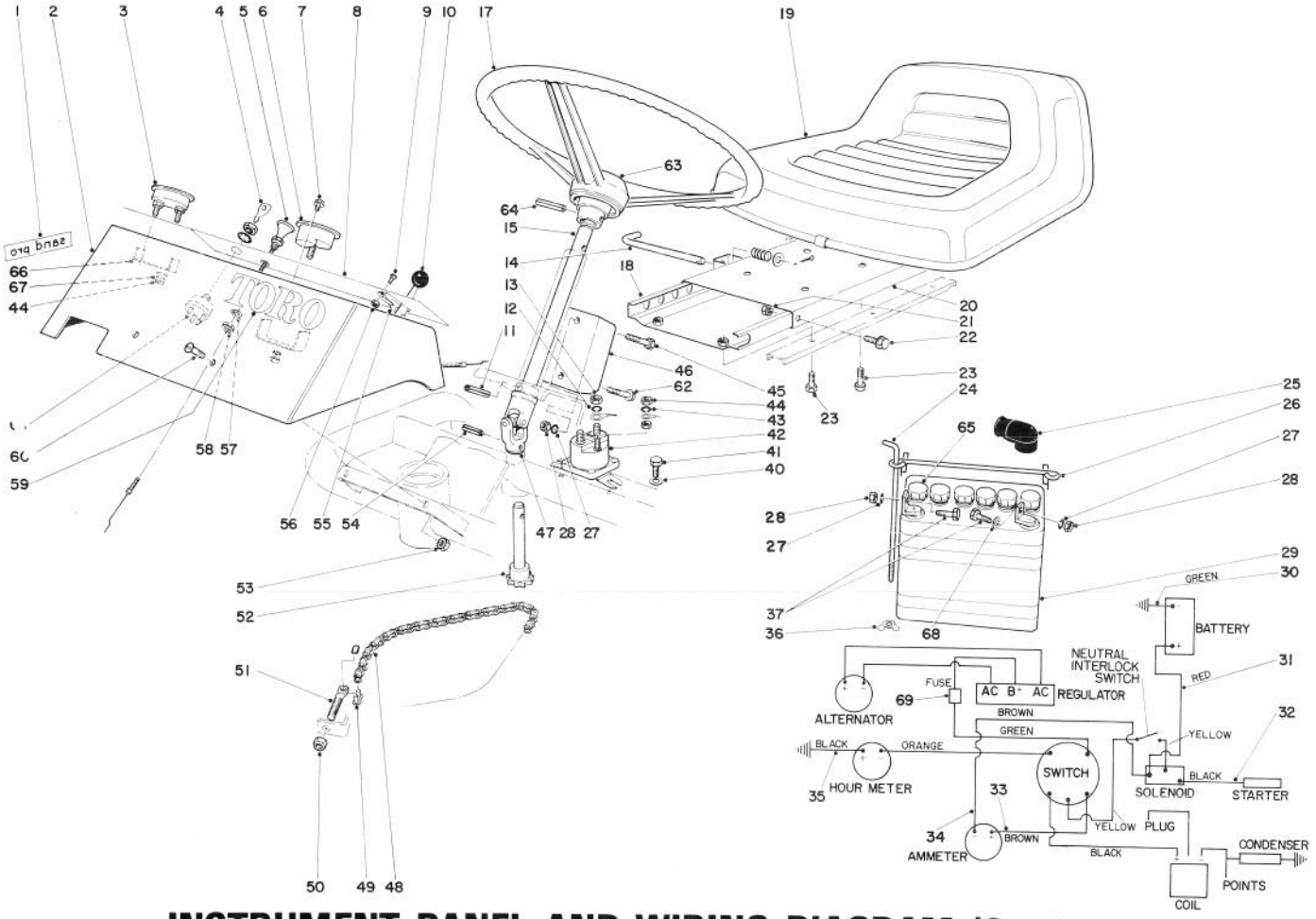

INSTRUMENT PANEL AND WIRING DIAGRAM (Continued)

Ref. No.	Part No.	Description	No. Used
50	3296-4	Locknut	2
51	18-6380	Steering Adjustment Pin	2
52	18-6330	Steering Shaft	1
53	32149-2	Nut	2
54	32121-6	Roll Pin	1
55	17-4970	Throttle Control	1
56	32146-18	Locknut	2
57	3254-6	Lockwasher	1
58	3220-3	Jam Nut	1
59	18-6900	Decal Toro	1
60	3258-2	Screw	2

Ref. No.	Part No.	Description	No. Used
61	12-8140	Switch	1
62	32140-79	Self Tapping Screw	1
63	24-2090	Steering Wheel Cap	1
64	32121-10	Roll Pin	1
65	239-18	Vent Cap	6
66	26-2350	Clamp	1
67	3253-2	Lockwasher	2
68	3256-16	Washer	2
†69		Fuse, 30 Amp AGC	1
*	3290-378	Cable Tie	4

*Not Illustrated
†Obtain Locally

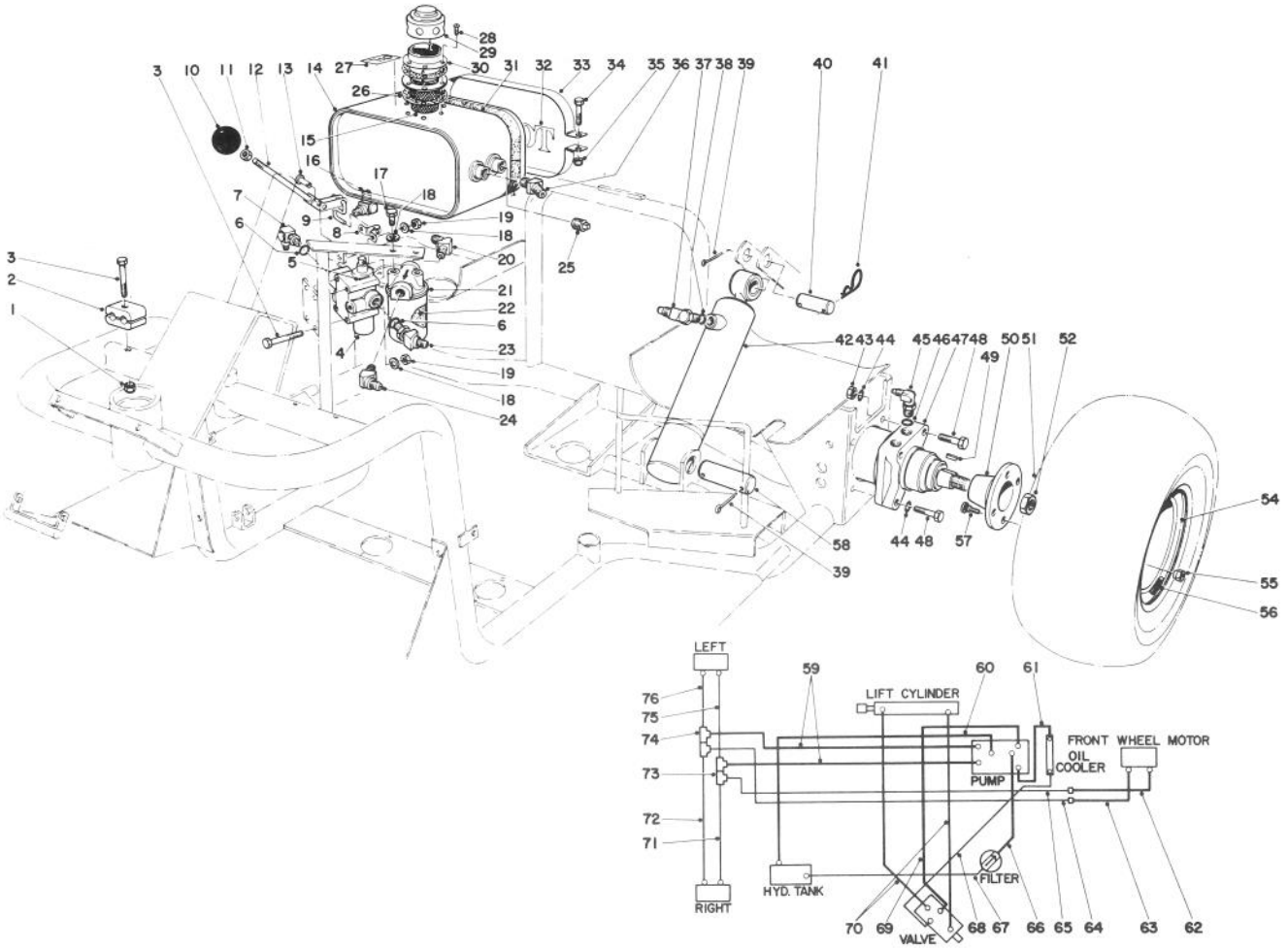

HYDRAULIC TANK AND SYSTEMS DIAGRAM

Ref. No.	Part No.	Description	No. Used
1	3296-42	Locknut	1
2	18-6760	Block	1
3	321-23	Capscrew	5
4	43-1950	Hydraulic Valve	1
5	3272-4	Cotter Pin	1
6	237-42	"O" Ring	2
7	353-511	Fitting	1
8	22-4600	Bracket Pivot	1
9	36-4630	S-Link	1
10	233-33	Knob	1
11	3218-2	Jam Nut	1
12	22-4560	Control Rod	1
13	283-17	Clevis Pin	1
14	21-5420	Hydraulic Tank	1
15	19-5970	Screen Assembly	1
16	353-533	90° Fitting	1
17	321-4	Capscrew	2
18	3253-3	Lockwasher	6
19	3217-5	Nut	4
20	353-535	Fitting	1
21	21-5550	Oil Filter & Head Assembly Complete	1
22	23-9740	Oil Filter Canister (25 Micron)	1
23	353-212	Fitting	1

Ref. No.	Part No.	Description	No. Used
24	353-534	Fitting	1
25	281-3	Plug	1
26	353-500	Gasket	1
27	18-6890	Oil Decal	1
28	32104-111	Screw	6
29	353-498	Breather Cap	1
30	353-501	Flange Adapter	1
31	18-6850	Felt Strip	1
32	18-6900	Decal Toro	1
33	18-6860	Tank Strap	3
34	323-11	Capscrew	1
35	32152-2	Lock Nut	1
36	353-510	45° Fitting	1
37	353-431	Fitting 45°	2
38	237-78	O-Ring	1
39	3272-23	Cotter Pin	3
40	18-7310	Pin	1
41	3290-256	Hair Pin Cotter	1
42	10-7910	Hydraulic Cylinder	1
43	3217-9	Nut	4
44	3253-7	Lockwasher	8
45	353-426	Fitting	4
46	237-80	O-Ring	4

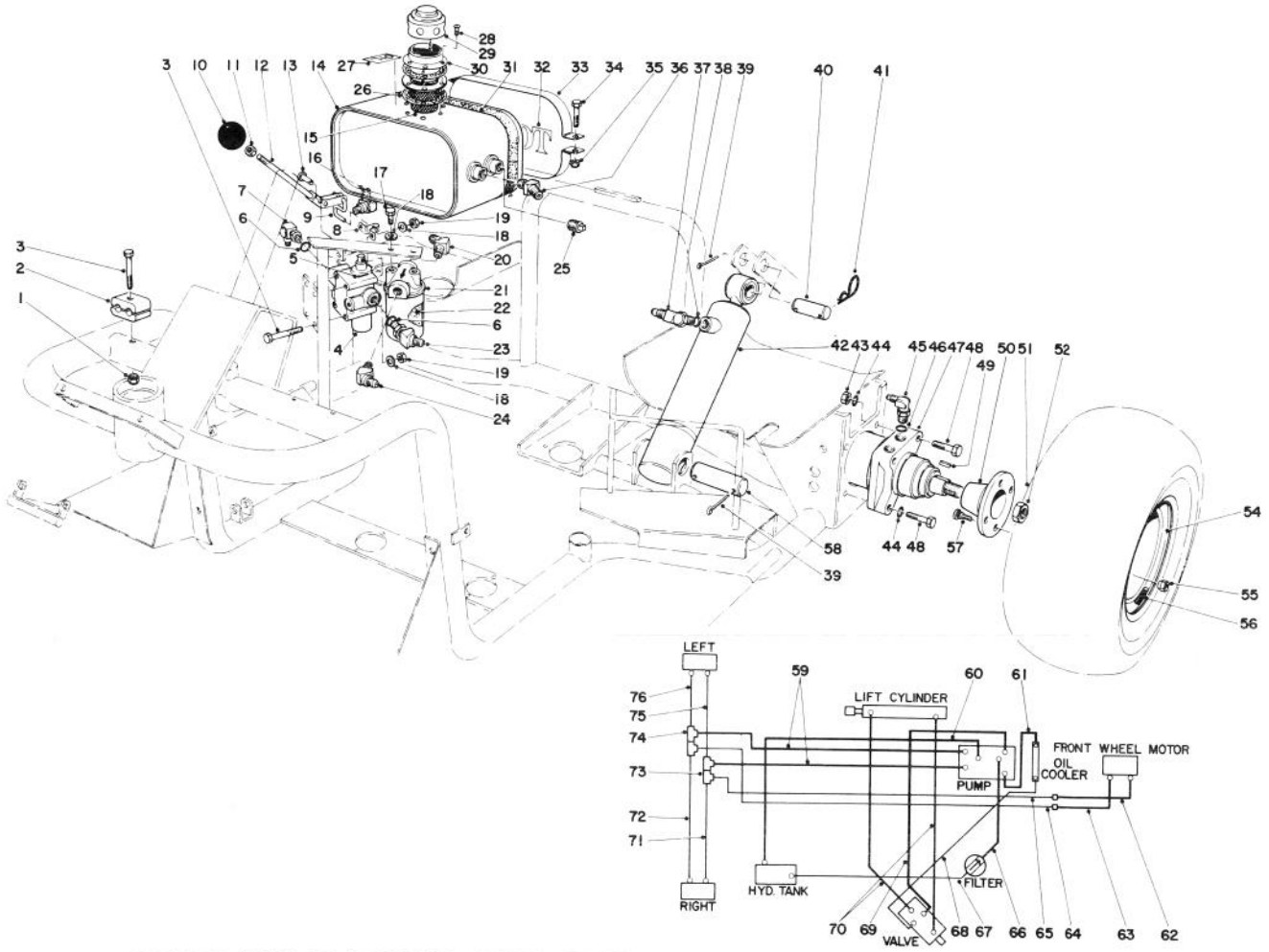

HYDRAULIC TANK AND SYSTEMS DIAGRAM (Continued)

Ref. No.	Part No.	Description	No. Used
47	10-8010	Hydraulic Motor	2
48	325-10	Capscrew	8
49	11-5790	Key	2
50	17-4710	Wheel Hub	2
51	28-1070	Tire	2
*	232-37	Inner Tube (Optional)	2
52	26-3790	Nut	2
54	242-53	Rim	2
55	242-50	Wheel Nut	8
56	232-35	Valve Stem	2
57	10-6830	Wheel Stud	8
58	18-7160	Pin	1
59	21-5370	Hose (Pump to Tee)	2
60	21-5360	Hose (Pump to Reservoir)	1
61	21-5390	Hose (Pump to Cooler)	1

Ref. No.	Part No.	Description	No. Used
62	18-6780	Hose (Front Motor)	1
63	18-6770	Hose (Front Motor)	1
64	18-6740	Tube-Front Motor R.H.	1
65	18-6750	Tube-Front Motor L.H.	1
66	21-5380	Hose (Filter to Pump)	1
67	22-7250	Tube (Filter to Tank)	1
68	22-7270	Tube – Valve, Cooler	1
69	21-5400	Hose (Pump to Valve)	1
70	22-4670	Hose (Valve to Cylinder)	2
71	18-6700	Tube-Front (R.H. Rear Motor)	1
72	18-6730	Tube-Rear (R.H. Rear Motor)	1
73	353-424	"T" Fitting	2
74	353-425	"T" Fitting	2
75	18-6710	Tube-Front (L.H. Rear Motor)	1
76	18-6720	Tube-Rear (L.H. Rear Motor)	1

*Not Illustrated

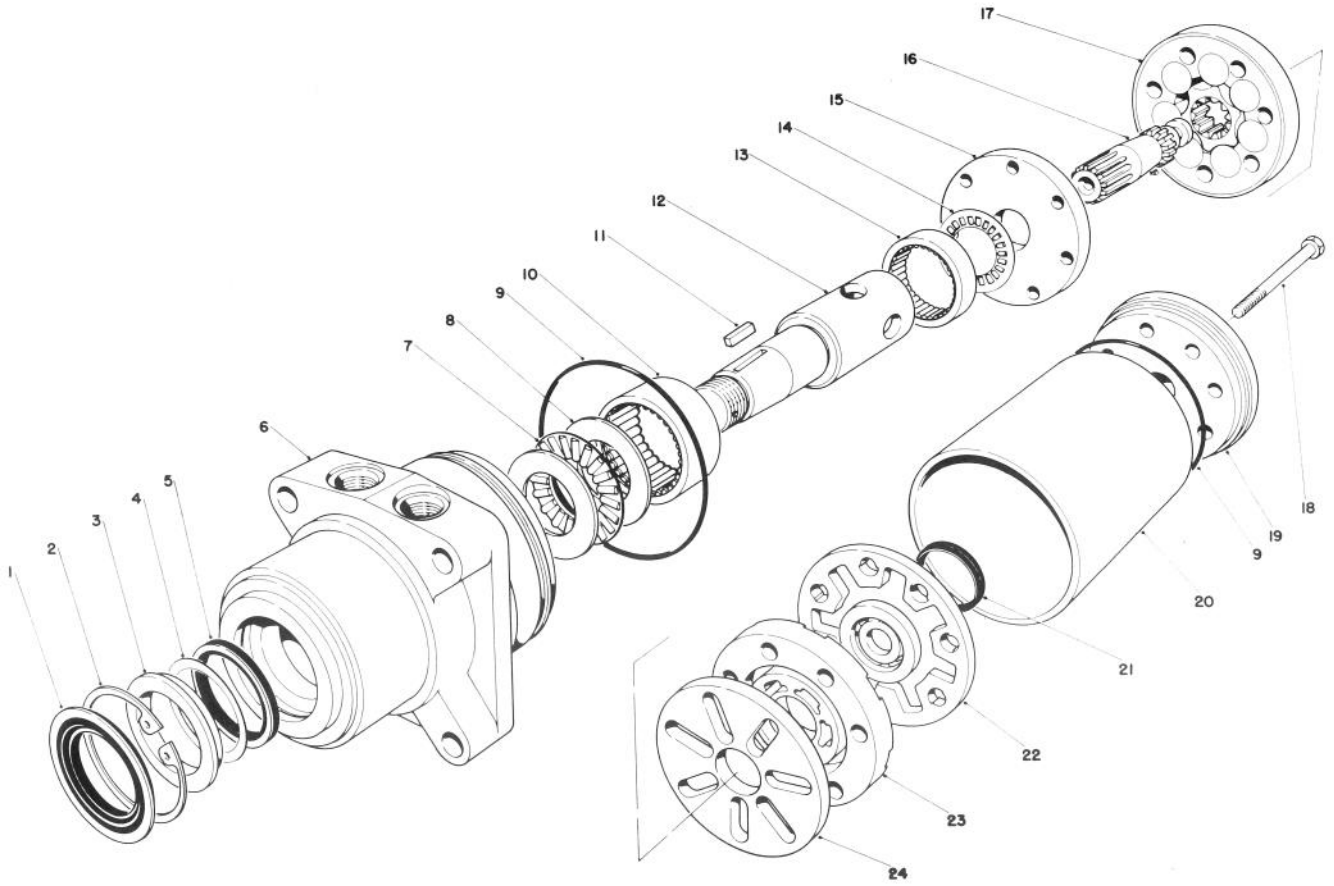

HYDRAULIC DRIVE MOTOR (REAR) NO. 10-8010

MAB 16

Ref. No.	Part No.	Description	No. Used
1		Dirt Seal	1
2		Retaining Ring	1
3		Spacer	1
4		Shim	1
5		Seal	1
*	353-461	Hydraulic Motor Seal Kit (Incl. Ref. #1-5 & 9 & 21)	1
6†		Housing	1
7	28-1060	Thrust Bearing	1
8	28-0930	Thrust Washer	2
9		Seal Ring	2
10	28-0870	Needle Bearing	1
11	11-5790	Key	1
12	28-0940	Coupling Shaft	1

Ref. No.	Part No.	Description	No. Used
13	28-0860	Needle Bearing	1
14	28-1050	Thrust Bearing	1
15†		Wear Plate	1
16	28-0880	Drive Link	1
17	28-0890	Rotor Assembly	1
18	3211-33	Capscrew	7
19†		End Cover Assembly	1
20†	353-671	Sleeve Protector	1
21		Bonded Ring	1
22	28-1100	Commutator Assembly	1
23	36-5000	Manifold Assembly (Incl. Ref. #24)	1
24†		Manifold Plate	1
*	26-3790	Lock Nut	1

*Not Illustrated
†Not available from Toro as a replacement part.

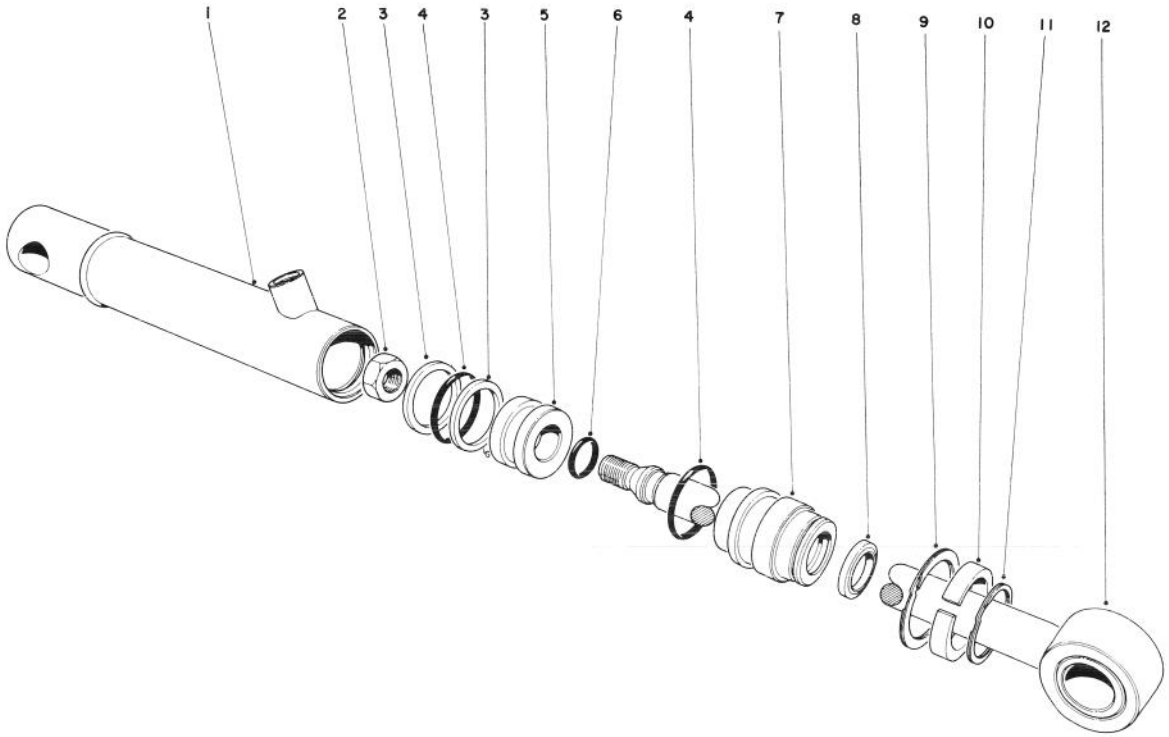

HYDRAULIC CYLINDER NO. 10-7910

Ref. No.	Part No.	Description	No. Used
1†		Tube Assembly	1
2		Jam Nut	1
3		Back Up Washer	2
4		O-Ring Piston	2
5	353-457	Piston	1
6		Seal Rod	1
7	353-470	Head Assy. w/Internal Seal	1

Ref. No.	Part No.	Description	No. Used
8		Rod Wiper	1
9		Lock Ring Head	1
10	353-454	Spacer	1
11	353-455	Lock Ring Spacer	1
12	353-456	Rod Assembly	1
*	353-439	Seal Repair Kit (Incl. Ref. #2-4, 6 & 8-9)	1

*Not Illustrated
†Not available from Toro as a replacement part.

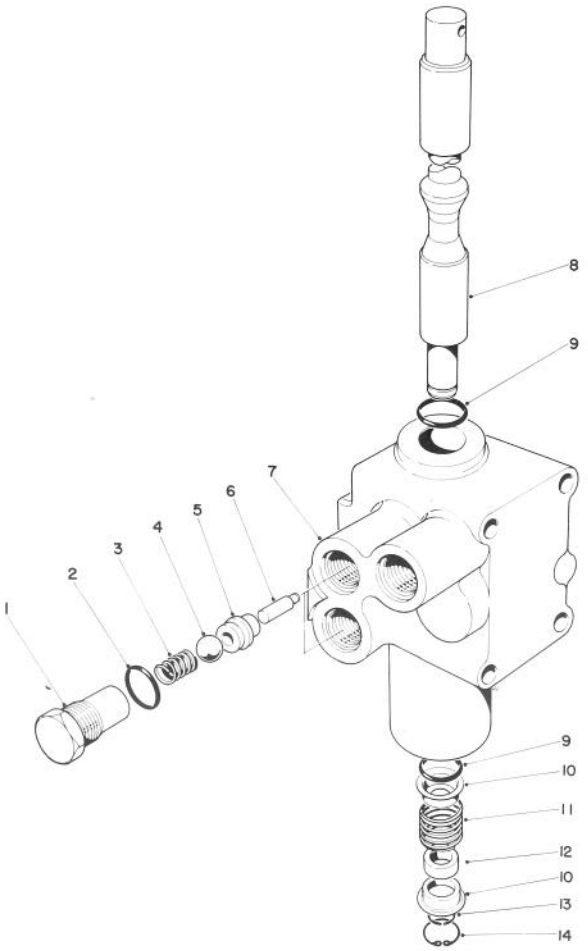

CONTROL VALVE NO. 43-1950

Ref. No.	Part No.	Description	No. Used
1	22-8330	Plug	2
2	237-42	O-Ring	2
3	22-8340	Spring	2
4	22-8350	Ball	2
5	22-8370	Seat-Check Valve	2
6	22-8360	Pin Cam	2
7	43-1730	Body	1

Ref. No.	Part No.	Description	No. Used
8	22-8420	Spool	1
9	22-8500	O-Ring	2
10	22-8380	Retainer Spring	2
11	22-8410	Spring	1
12	23-3030	Spacer	1
13	22-8480	Snap Ring Spool	1
14	22-8490	Snap Ring	1

*Not Illustrated

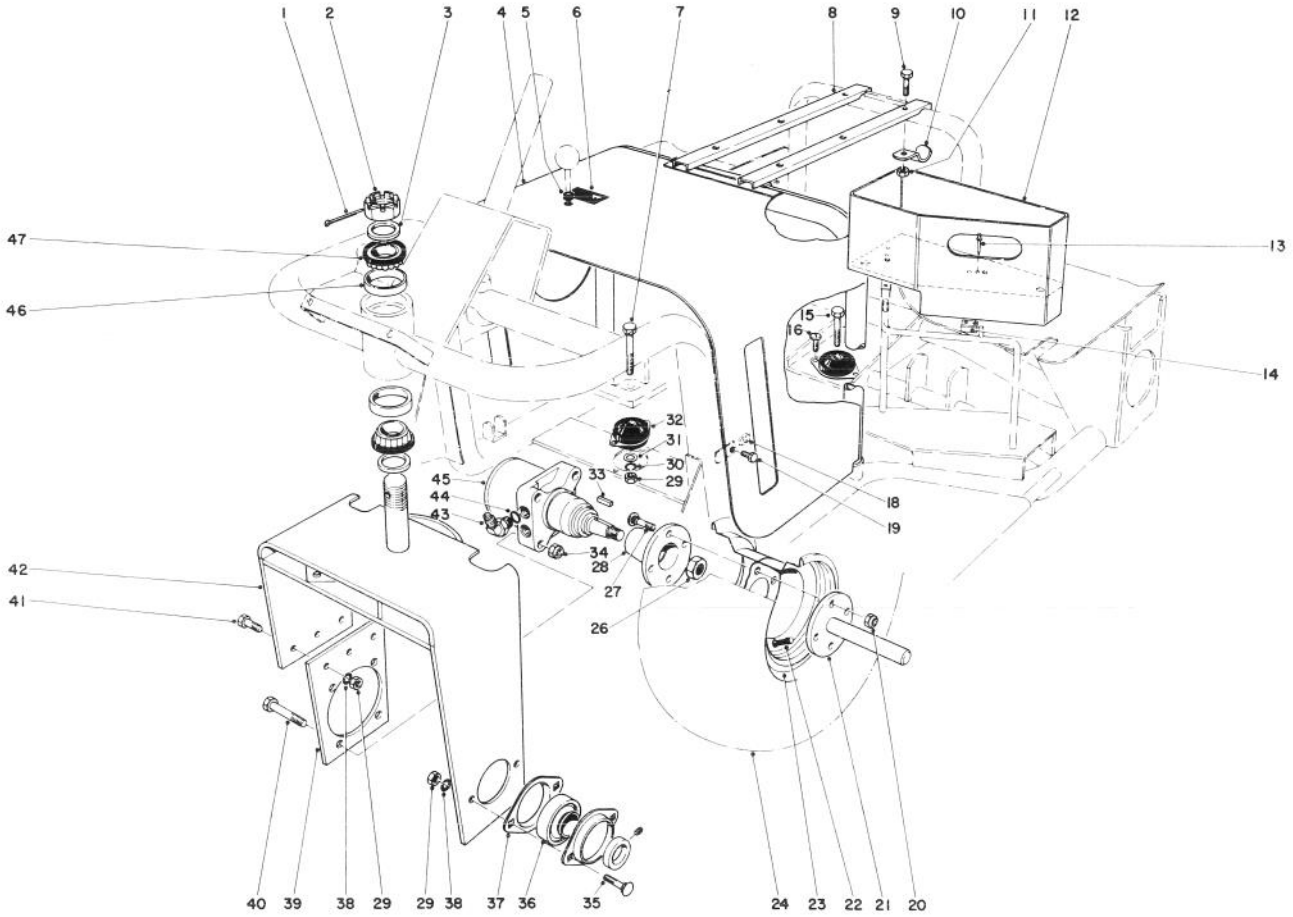

FRONT STEERING FORK AND MOTOR ASSEMBLY

Ref. No.	Part No.	Description	No. Used
1	3272-37	Cotter Pin	1
2	32136-9	Hex Slotted Nut	1
3	18-6320	Washer – Steering	2
4	26-2800	Front Seat Support	1
5	237-84	Grommet	1
6	18-7980	Decal – Caution	1
7	323-12	Capscrew	2
8	18-6920	Seat Channel	2
9	322-3	Capscrew	2
10	10-9240	Seat Clamp	2
11	32146-5	Locknut	2
12	18-7080	Litter Box	1
13	3290-344	Pop Rivet	4
14	2412-43	Clip	2
15	323-10	Capscrew	1
16	32104-60	Screw Self Tapping	6
18	3290-199	Tinnerman Clip	2
19	321-2	Capscrew	2
20	3296-19	Nut	4
21	18-6290	Axle Shaft	1
22	232-35	Valve Stem	1
23	242-53	Rim	1
24	28-1070	Tire	1

Ref. No.	Part No.	Description	No. Used
*	232-37	Inner Tube (Optional)	1
26	26-3790	Nut	1
27	17-2520	Drive Type Stud	4
28	18-8090	Wheel Hub	1
29	3217-7	Nut	8
30	3253-21	Lockwasher	3
31	3256-24	Plain Washer	3
32	18-8000	Rubber Mount	3
33	11-5790	Square Key	1
34	32146-13	Locknut	4
35	3231-2	Carriage Bolt	2
36	251-165	Bearing w/Collar	1
37	251-166	Flange	2
38	3253-21	Lockwasher	5
39	18-6270	Wheel Motor Mount	1
40	325-10	Capscrew	4
41	323-6	Capscrew	3
42	18-6210	Fork	1
43	353-427	45° Fitting	2
44	237-80	O-Ring	2
45	17-2450	Hydraulic Motor	1
46	254-61	Bearing Cup	2
47	254-70	Bearing Cone	2

*Not Illustrated

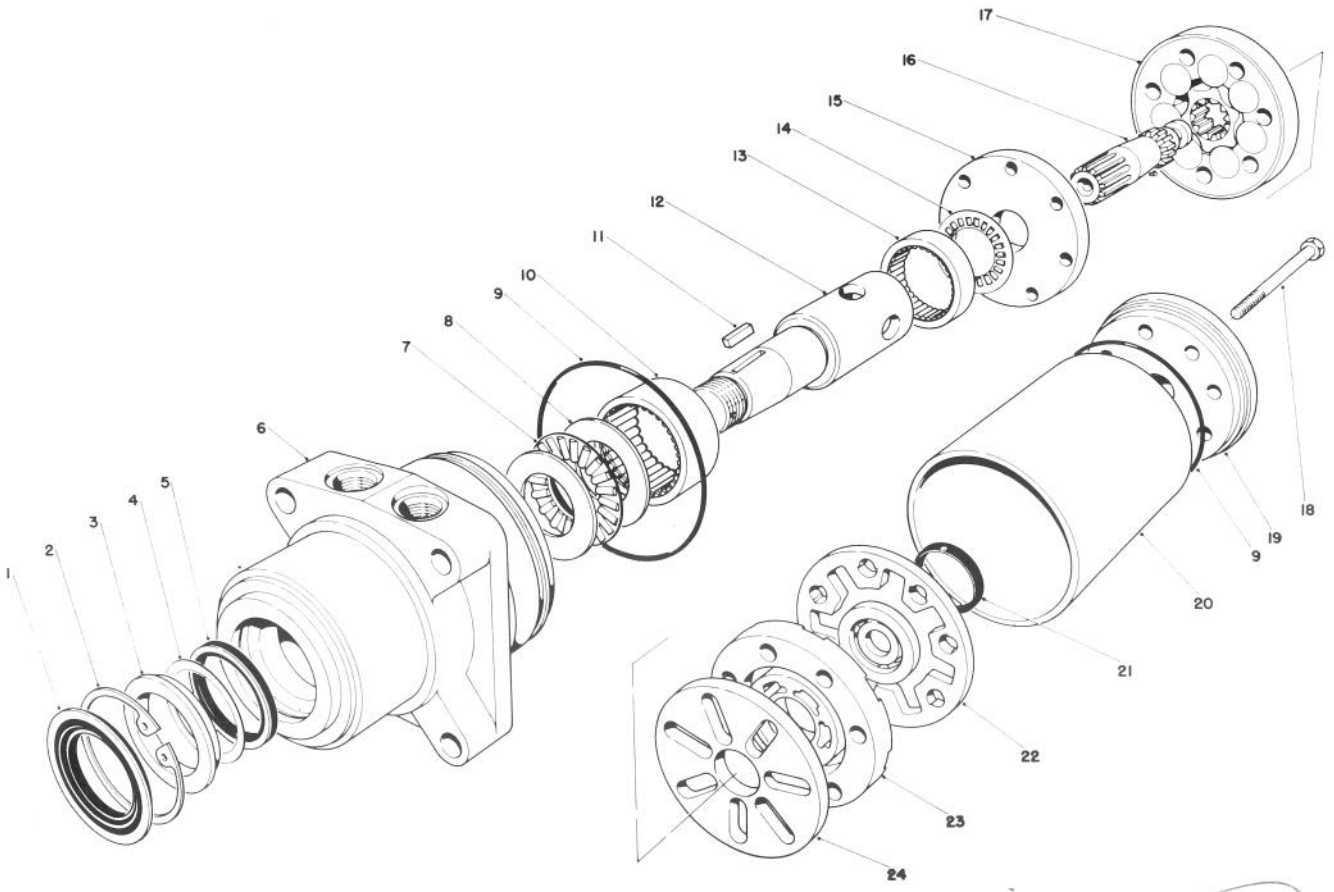

HYDRAULIC DRIVE MOTOR (FRONT) NO. 17-2450

MIAB 08

Ref. No.	Part No.	Description	No. Used
1		Dirt Seal	1
2		Retaining Ring	1
3		Spacer	1
4		Shim	1
5		Seal	1
*	353-461	Hydraulic Motor Seal Kit (Incl. Ref. #1-5 & 9 & 21)	1
6†		Housing	1
7	28-1060	Thrust Bearing	1
8	28-0930	Thrust Washer	2
9		Seal Ring	2
10	28-0870	Needle Bearing	1
11	11-5790	Key	1
12	28-0940	Coupling Shaft	1

Ref. No.	Part No.	Description	No. Used
13	28-0860	Needle Bearing	1
14	28-1050	Thrust Bearing	1
15†		Wear Plate	1
16	28-1090	Drive Link	1
17	28-1080	Rotor Assembly	1
18	3211-33	Capscrew	7
19†		End Cover Assembly	1
20†		Sleeve Protector	1
21		Seal Ring	1
22	28-1100	Commutator Assembly	1
23	36-5000	Manifold Assembly (Incl. Ref. #24)	1
24†		Manifold Plate	1
*	26-3790	Locknut	1

*Not Illustrated
†Not available from Toro as a replacement part.

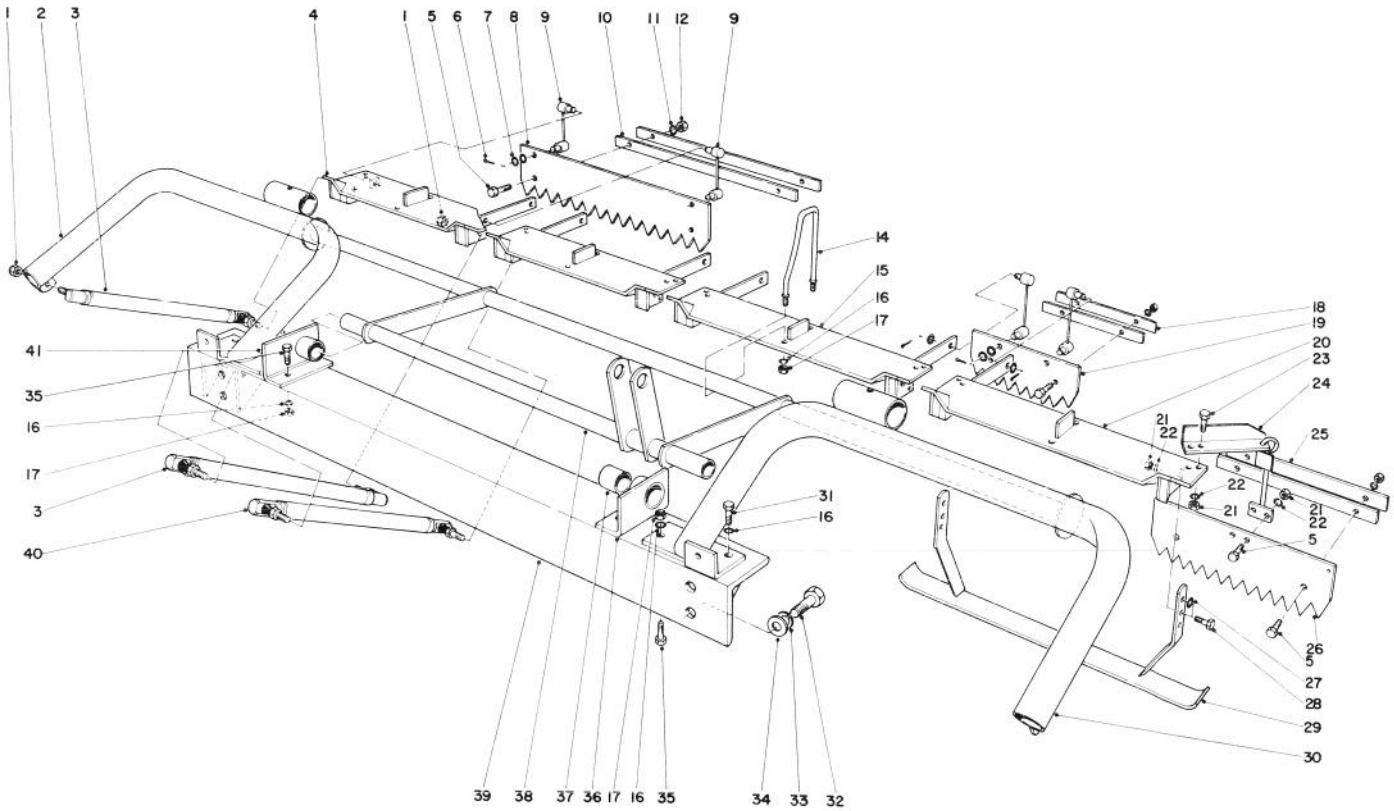

RAKE ASSEMBLY MODEL NO. 08811

Ref. No.	Part No.	Description	No. Used
1	3296-5	Nut	16
2	18-7260	Wheel Hoop R. H.	1
3	18-7550	Ball Joint Assembly	4
4	18-7450	Upper Rake	1
5	322-5	Capscrew	18
6	3272-10	Cotter Pin	28
7	3256-23	Washer	42
8	18-7560	Plate Drag Main	4
9	20-4670	Drag Cable Assembly	14
10	18-7570	Weight Drag	8
11	3253-4	Lockwasher	18
12	3217-6	Nut	18
14	18-7520	Hoop Lift	4
15	18-7380	Upper Rake (Center)	2
16	3253-21	Lockwasher	14
17	3217-7	Nut	12
18	18-7590	Weight Drag (Secondary)	6
19	18-7580	Plate Drag (Secondary)	3
20	18-7420	Upper Rake L. H.	1
21	3217-5	Nut	24
22	3253-3	Lockwasher	24

Ref. No.	Part No.	Description	No. Used
23	321-4	Capscrew	8
24	18-7660	Swivel Bracket	2
25	18-7650	Weight	4
26	18-7640	Swivel Drag	2
27	3256-22	Washer	8
28	321-31	Capscrew	16
29	18-7460	Rake Bar	4
30	18-7360	Wheel Hoop L. H.	1
31	323-3	Capscrew	2
32	325-5	Capscrew	4
33	3253-7	Lockwasher	4
34	3256-26	Flatwasher	4
35	323-6	Capscrew	4
36	18-7220	Pivot Bracket L. H. (Incl. Ref. 37)	1
37	256-234	Bushing	2
38	18-7170	Lift Bar	1
39	18-7280	Mount Rake	1
40	18-7530	Ball Joint Assembly (Center)	4
41	18-7250	Pivot Bracket R. H. (Incl. Ref. 37)	1

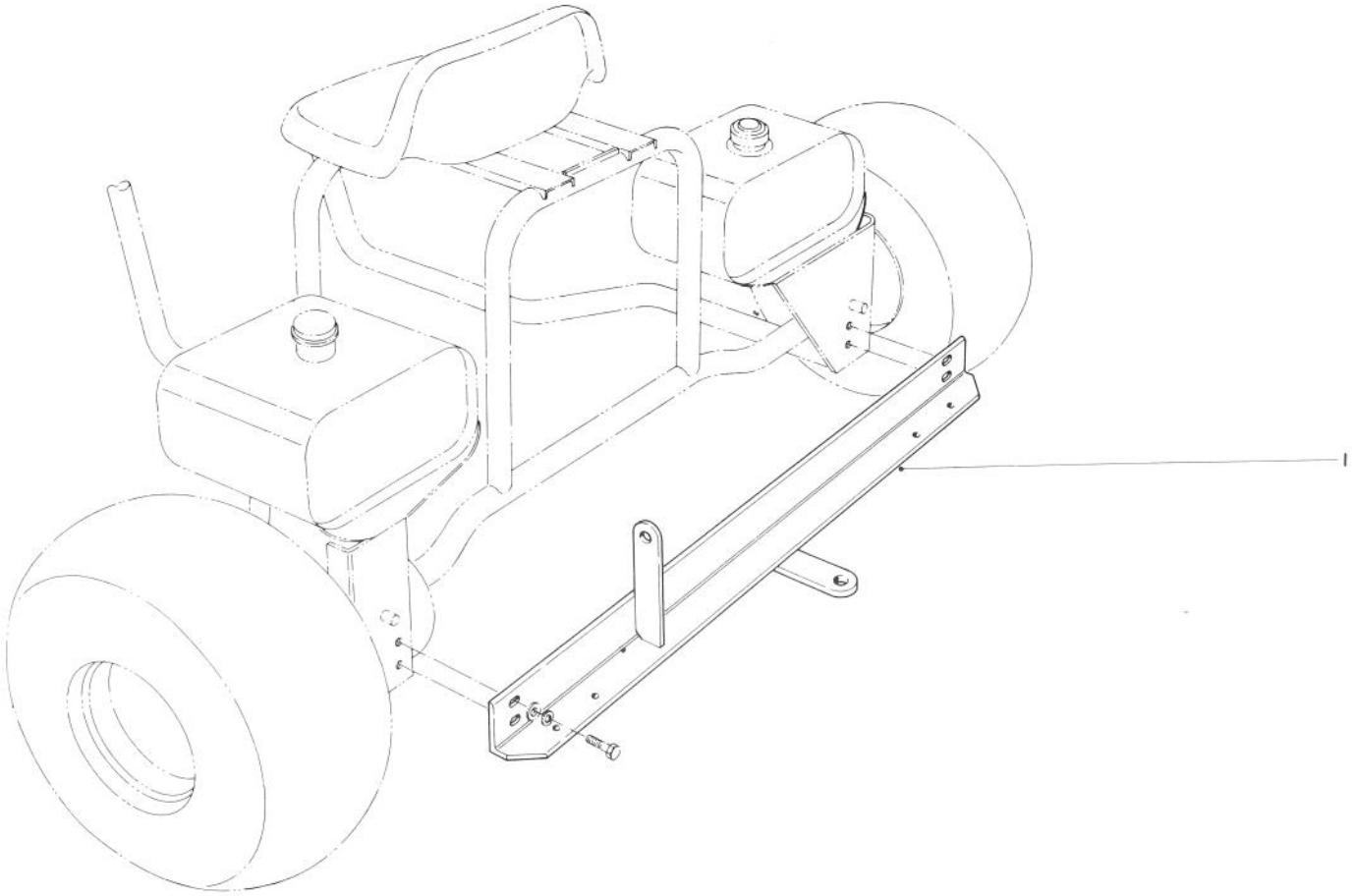

HITCH KIT MODEL NO. 08833

Ref. No.	Part No.	Description	No. Used
1	20-3910	Hitch	1

Ref. No.	Part No.	Description	No. Used

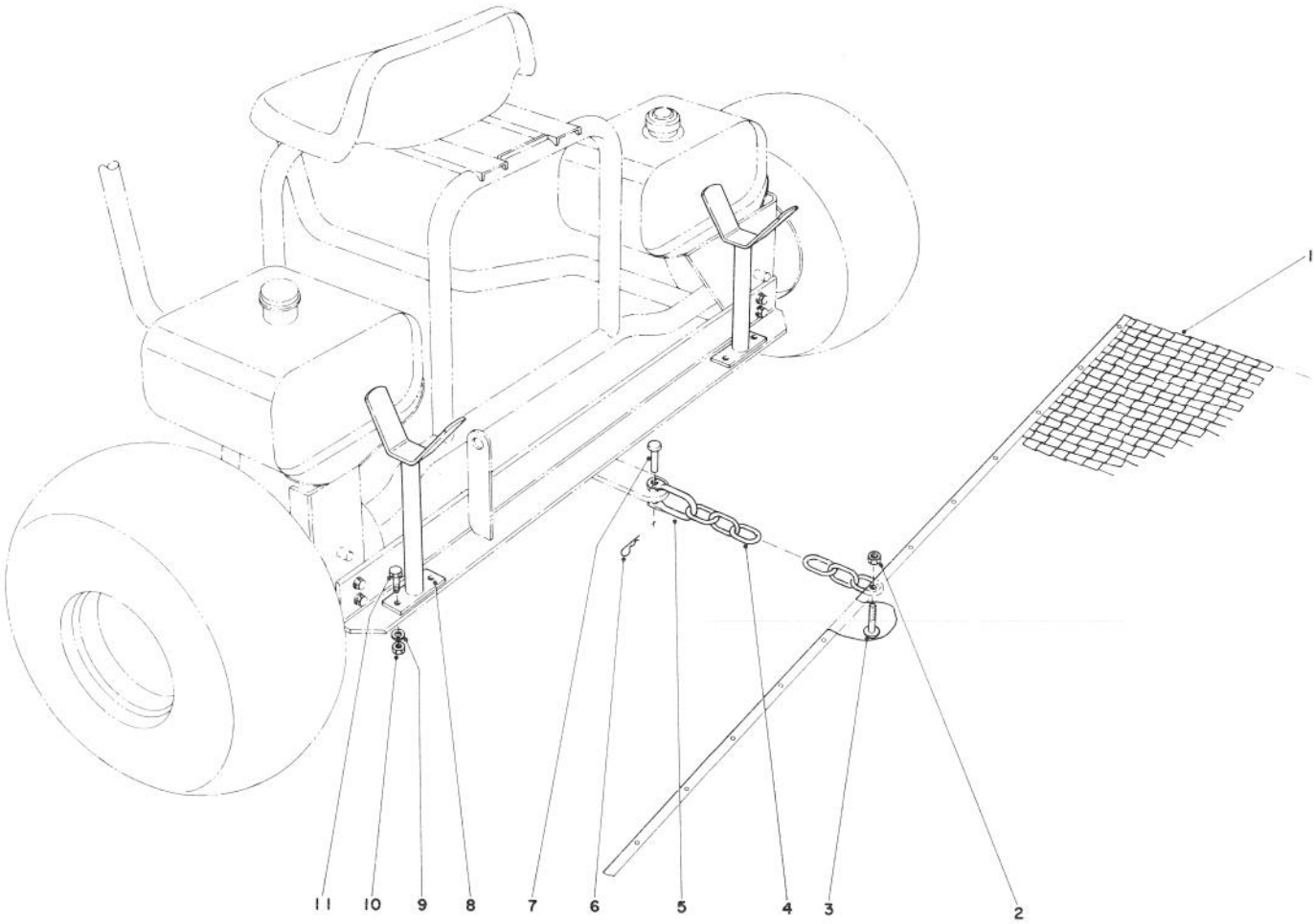

DRAG MAT KIT MODEL NO. 08844

Ref. No.	Part No.	Description	No. Used
1	20-4290	Drag Mat	1
2	3296-29	Locknut	1
3	32122-35	Machine Screw	1
4	2820-2	Chain	1
5	5-2942	Shackle	1
6	3290-250	Hair Pin Cotter	1

Ref. No.	Part No.	Description	No. Used
7	283-10	Pin	1
8	28-0830	Drag Mat Holder	2
9	3253-21	Lockwasher	4
10	3217-7	Nut	4
11	323-29	Capscrew	4

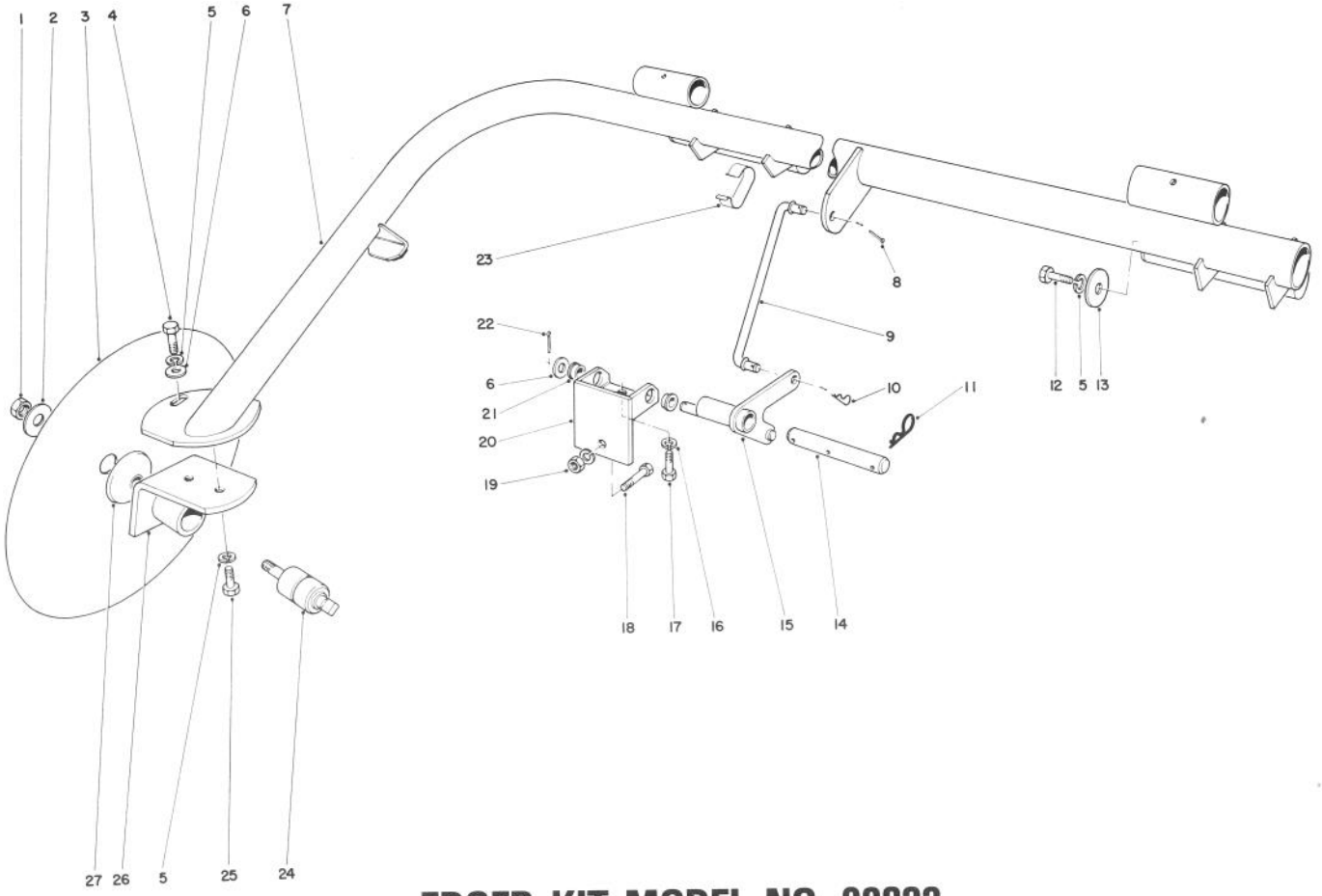

EDGER KIT MODEL NO. 08822

Ref. No.	Part No.	Description	No. Used
1	3296-33	Locknut	1
2	3256-7	Flatwasher	1
3	20-4070	Edger Disk	1
4	325-5	Capscrew	1
5	3253-7	Lockwasher	3
6	3256-26	Flatwasher	3
7	20-4030	Edger Arm	1
8	3272-2	Cotter Pin	1
9	20-4190	Actuator Link	1
10	3290-250	Hair Pin Cotter	1
11	3290-256	Hair Pin Cotter	2
12	323-4	Capscrew	1
13	5-1720	Washer	1
14	20-4230	Cylinder Pin	1

Ref. No.	Part No.	Description	No. Used
15	20-3980	Bell Crank	1
16	3253-21	Lockwasher	2
17	325-2	Capscrew	1
18	323-7	Capscrew	1
19	3217-7	Full Nut	1
20	20-3970	Pivot Mount (Incl. Ref. 21)	1
21	256-156	Bushing	2
22	3272-7	Cotter Pin	1
23	20-4200	Spring Clip	2
24	20-4090	Edger-Disk Bearing	1
25	325-4	Capscrew	1
26	20-4020	Disk Support Plate (Incl. Ref. 24)	1
27	20-4050	Disk Support	1

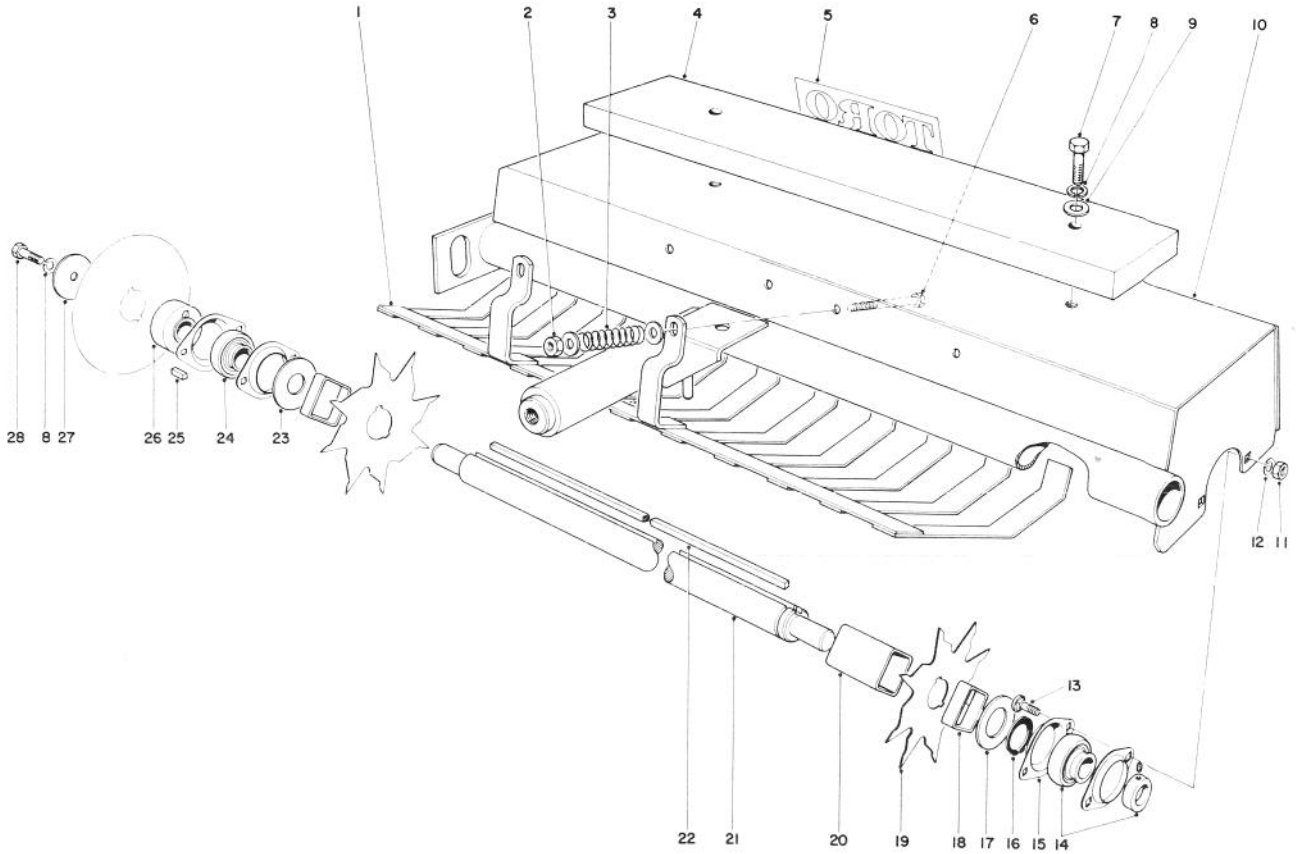

SPIKER MODEL NO. 08855

Ref. No.	Part No.	Description	No. Used
1	20-9140	Fork Assembly L.H.	1
*	20-9150	Fork Assembly R.H.	1
2	3296-39	Locknut	4
3	20-9550	Compression Spring	4
4	20-9430	Weight	2
5	18-6900	Decal	1
6	323-14	Capscrew	4
7	323-10	Capscrew	4
8	3253-21	Lockwasher	6
9	3256-24	Flatwasher	12
10	20-9040	Frame Assembly L.H.	1
*	20-9050	Frame Assembly R.H.	1
11	3217-6	Nut	8
12	3253-4	Lockwasher	8
13	3230-1	Carriage Bolt	8

Ref. No.	Part No.	Description	No. Used
14	251-253	Bearing w/Collar Assembly	2
15	251-255	Flange	8
16	32151-44	Retaining Ring	2
17	20-9490	Washer	2
18	20-7400	End Spacer	4
19	20-7380	Spike Blade	24
20	20-9480	Spacer	20
21	20-9470	Shaft	2
22	20-9460	Key	2
23	20-9500	Washer	2
24	251-254	Bearing	2
25	20-9540	Key	2
26	20-9980	Hub	2
27	20-9530	End Washer	2
28	323-7	Capscrew	2
*	21-6000	Spiker Depth Gauge	1

*Not Illustrated

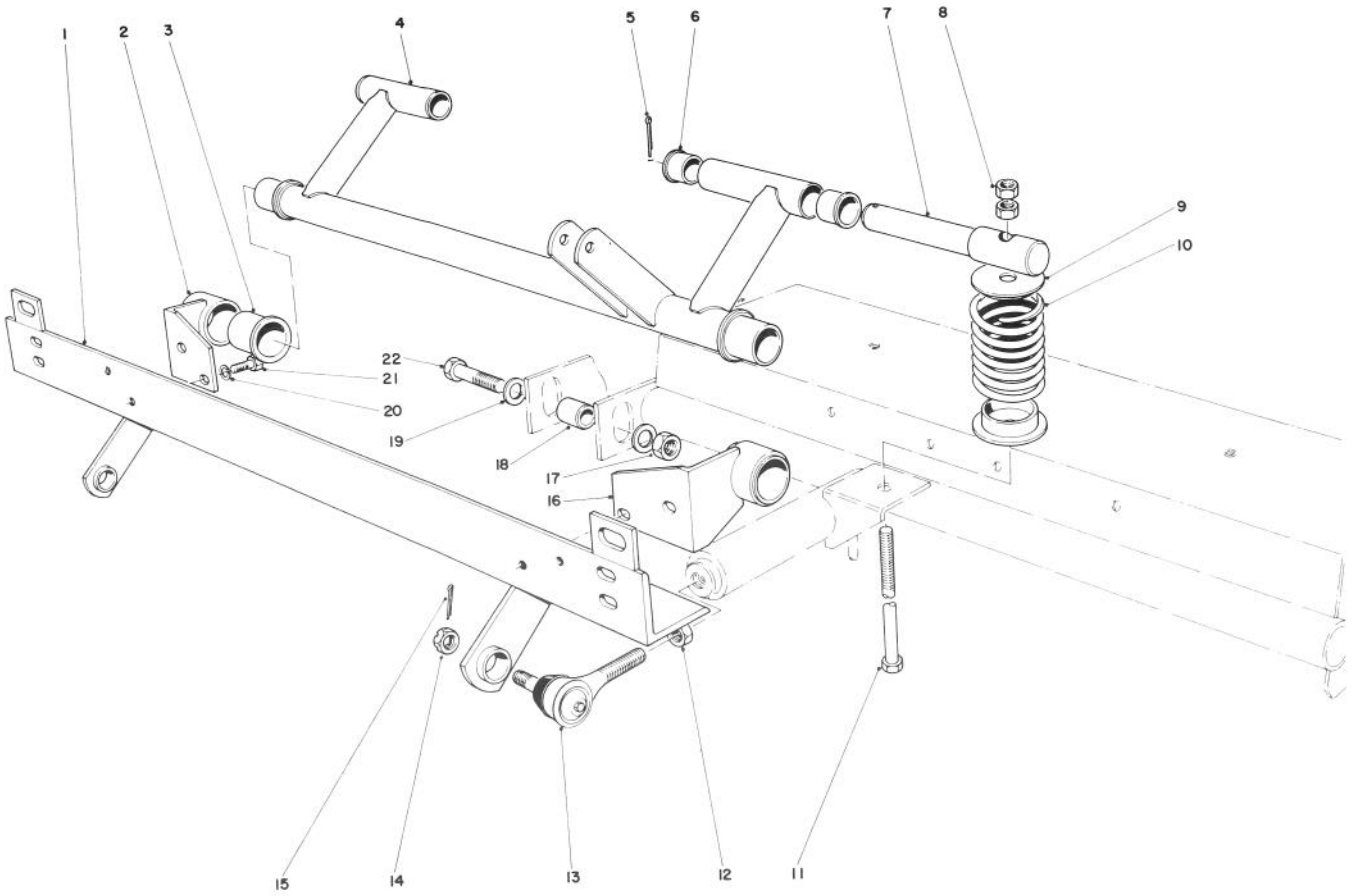

SPIKER MODEL NO. 08855 (Continued)

Ref. No.	Part No.	Description	No. Used
1	20-9310	Mount	1
2	20-9270	Anchor R.H. (Incl. Ref. #3)	1
3	256-245	Bushing	2
4	20-9190	Left Arm (Incl. Ref. #6)	1
5	3272-13	Cotter Pin	2
6	256-10	Bushing	2
7	20-9400	Actuating Pin	2
8	3217-9	Nut	4
9	20-9350	Spring Mount	4
10	20-9420	Spring	2
11	20-9390	Actuating Rod	2

Ref. No.	Part No.	Description	No. Used
12	20-9990	Nut	2
13	21-4010	Ball Joint (Incl. Ref. #14)	2
14	32136-3	Slotted Nut	2
15	3272-7	Cotter Pin	2
16	20-9260	Anchor L.H.	1
17	3296-25	Locknut	1
18	20-9410	Center Support Tube	1
19	3256-26	Flat Washer	2
20	3253-21	Lockwasher	4
21	323-5	Capscrew	4
22	325-8	Capscrew	1

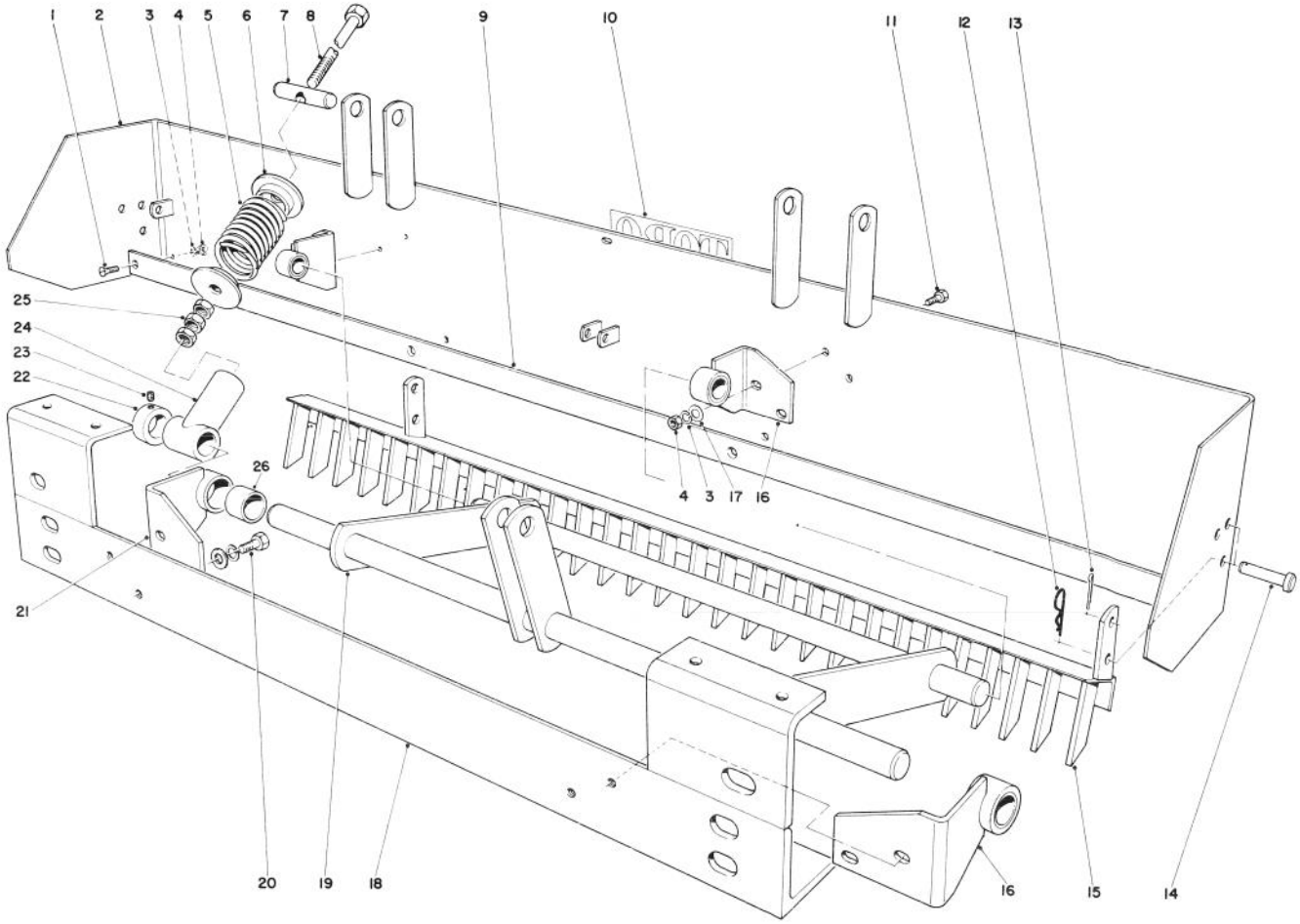

FINISH GRADER KIT MODEL NO. 08867

Ref. No.	Part No.	Description	No. Used
1	32108-39	Flat Hd. Screw	4
2	23-2780	Plow	1
3	3253-21	Lockwasher	12
4	3217-7	Hex Nut	12
5	20-9420	Compression Spring	2
6	23-2760	Spring Mount	4
7	23-2740	Actuating Pin	2
8	23-2770	Actuating Rod	2
9	23-2790	Blade Scraper	1
10	18-6900	Decal	1
11	323-7	Capscrew	4
12	3290-355	Hair Pin Cotter	2
13	3272-11	Cotter Pin	3
14	283-40	Clevis Pin	5

Ref. No.	Part No.	Description	No. Used
15	23-2750	Scarifier (43 Fingers)	1
*	23-3010	Scarifier (22 Fingers)	1
16	23-2810	Anchor L.H. (Incl. Ref. #26)	2
17	3256-24	Flat Washer	8
18	23-2710	Mount	1
19	23-2680	Lift Arm	1
20	323-5	Capscrew	4
21	23-2690	Anchor R.H. (Incl. Ref. #26)	2
22	23-2730	Lock Collar	2
23	3246-1	Set Screw	2
24	23-2720	Adjusting Sleeve	2
25	3217-11	Hex Nut	6
26	256-237	Bushing	4
*	26-0030	Decal Infield Pro	1

*Not Illustrated

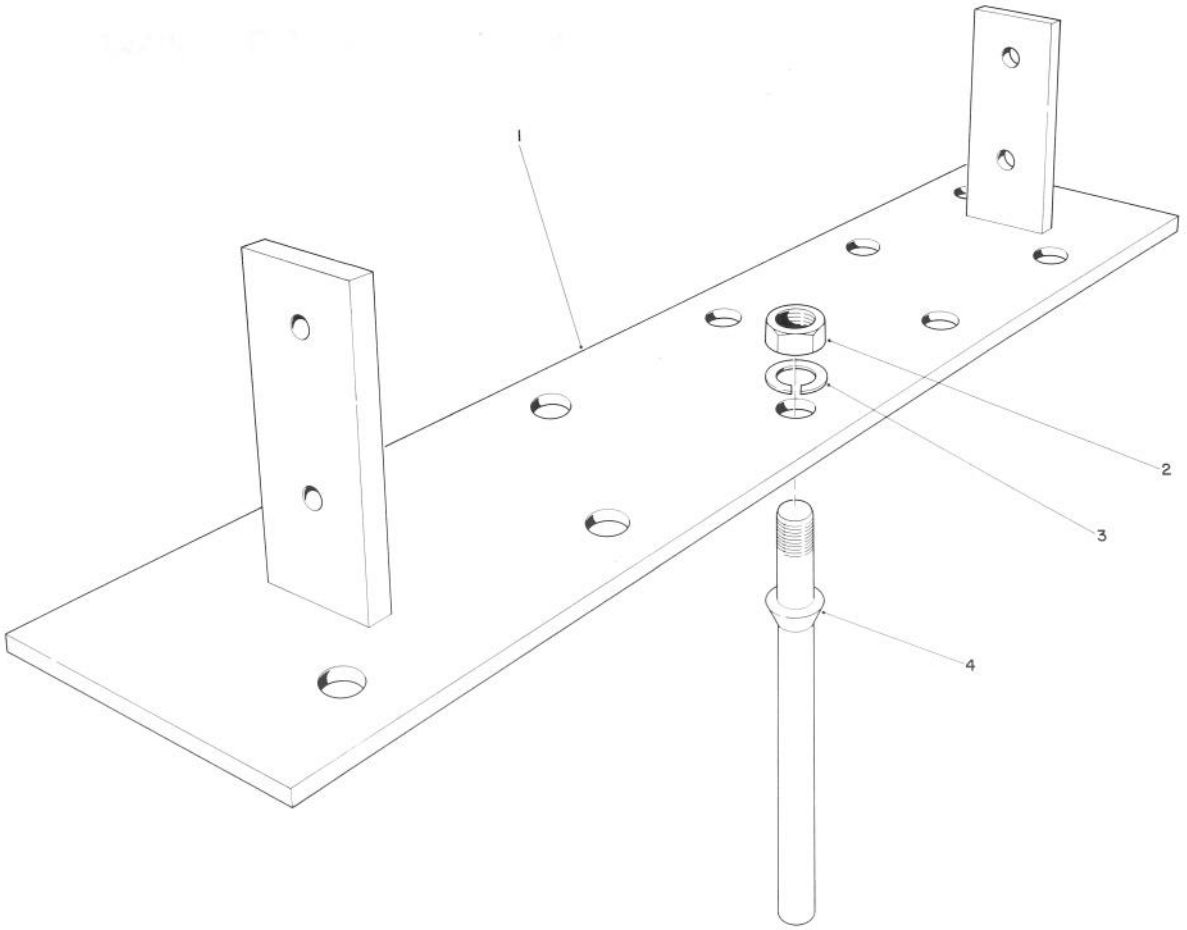

PRONG RAKE KIT NO. 42-3960

Ref. No.	Part No.	Description	No. Used
1	42-1910	Plate	4
2	3217-7	Nut	40

Ref. No.	Part No.	Description	No. Used
3	3253-29	Lockwasher	40
4	42-1940	Prong – Rake	40

ENGINE KOHLER MODEL NO. K-181S SPEC. NO. 30658D

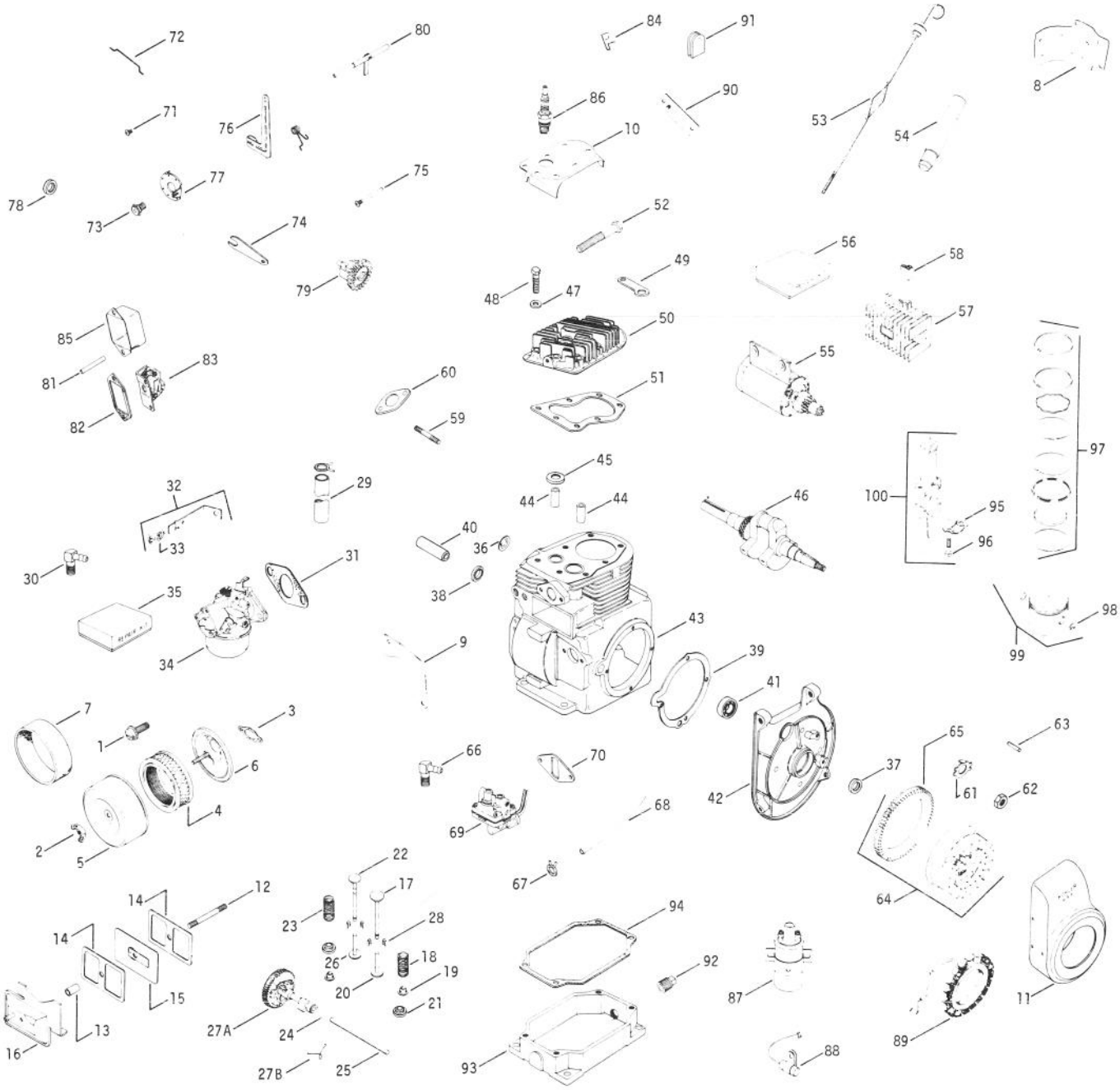

ENGINE KOHLER MODEL NO. K-181S SPEC. NO. 30658D

Ref. No.	Part No.	Description	No. Used
		Air Intake Group	
1	X-67-59	Screw, self tap #8 – 32 x 3/8	2
	X-167-1	Screw, R.H.M. #8 – 32 x 3/8	2
2	X-276-7	Nut, Wing	1
3	220537	Gasket	1
4	231847	Element, Air Cleaner	1
5	231855	Cover, Air Cleaner	1
6	231857	Base, Air Cleaner	1
7	234869	Element, Pre-Cleaner	1
		Baffles and Shroud Group	
8	230054	Baffle, Cylinder	1
9	230757	Baffle, Side Air	1
10	234796	Baffle, Head	1
11	41 027 14	Housing, Blower	1
		Breather and Vent Group	
12	230043	Stud, Valve Cover	1
13	230046	Seal, Breather	1
14	230048	Gasket, Valve Cover	2
15	230066	Breather	1
16	41 254 02	Cover, Valve	1
		Camshaft and Valves Group	
17	230008	Valve, Intake	1
18	230010	Spring, Intake Valve	1
19	230011	Retainer, Spring	1
20	230013	Tappet, Valve	1
21	230020	Rotator, Valve	1
22	230027	Valve, Exhaust	1
23	230168	Spring, Exhaust Valve	1
24	230293	Spacer, Camshaft .005	A/R
	230294	Spacer, Camshaft .010	A/R
25	230053	Pin, Camshaft	1
26	232777	Tappet, Exhaust Valve	1
27A	A-231511-S	Kit, Camshaft (Non-Metallic)	1
27B	47 089 01	Spring, Actuating	1
28	240013	Keeper, Spring	4
		Carburetor Group	
29	X-386-31	Hose	1
30	X-391-1	Elbow, Hose	1
31	210223	Gasket, Carburetor	1
32	A-236918	Bracket, Choke	1
33	235603	Clip, Cable	1
34	41 053 01	Carburetor	1
35	231555	Kit, Carburetor Repair	1
		Crankcase Group	
36	X-230-11	Plug, Expansion	1
37	X-583-1	Seal, Front Oil	1
38	X-583-2	Seal, Rear Oil	1
39	230071	Gasket, Bearing Plate	1
40	230125-S	Shaft, Governor	1
41	231625	Bearing Ball	2
42	41 156 03	Plate, Bearing	1
43		Block, Cylinder – Assembly (Use B-238001 Miniblock)	1

Ref. No.	Part No.	Description	No. Used
44	230007-S	Guide, Valve	2
45	230170	Insert	1
		Crankshaft Group	
46	231805	Crankshaft	1
		Cylinder Head Group	
47	220534	Washer	7
48	230922	Screw, H.C. 5/16 – 18 x 1-5/8	1
49	232867	Strap, Lifting	1
50	41 015 02	Head, Cylinder	1
51	41 041 05	Gasket, Head	1
52	41 086 02	Screw, H.C. 5/16 – 18 x 1-1/2	6
		Dipstick Group	
53	A-231725	Dipstick	1
54	231726	Tube, Oil Fill	1
		Electric Start Group	
55	41 098 01	Starter	1
56	237367	Kit, Brush and Spring	1
57	237335	Regulator-Rectifier	1
58	237429	Connector	1
		Exhaust Group	
59	235899	Stud 5/16 – 18 x 1-1/4	1
60	41 041 01	Gasket, Exhaust	2
		Flywheel Group	
61	X-25-15	Washer 5/8	1
62	X-119-14	Nut, Lock 5/8 – 18	1
63	X-286-15	Key 3/16	1
64	A-234807	Flywheel	1
65	232649	Gear Ring	1
		Fuel Pump Group	
66	X-391-1	Connector	1
67	X-426-9	Clamp, Hose	2
68	X-697-6	Line, Fuel	1
69	41 559 02	Pump, Fuel (Includes gasket)	1
70	47 041 04	Gasket, Fuel Pump	1
		Governor Group	
71	X-67-5	Screw Drive	1
72	230078	Linkage, Governor	1
73	230476	Bushing, Governor	1
74	230477	Bracket, Speed Control	1
75	231355	Pin, Governor Stop	1
76	A-234178	Lever, Governor	1
77	232836	Disc, Regulating	1
78	234866	Bearing	1
79	A-237031	Gear, Governor	1
80	230540-S	Shaft, Governor Cross	1
		Ignition Group	
81	X-489-2	Rod, Breaker	1
82	220174	Gasket, Cover	1
83	47 150 01	Breaker	1
84	230249	Clip	1
85	A-220136	Cover, Breaker	1
86	41 132 06	Plug, Spark	1
87	231281	Coil, Ignition	1

ENGINE KOHLER MODEL NO. K-181S SPEC. NO. 30658D (Continued)

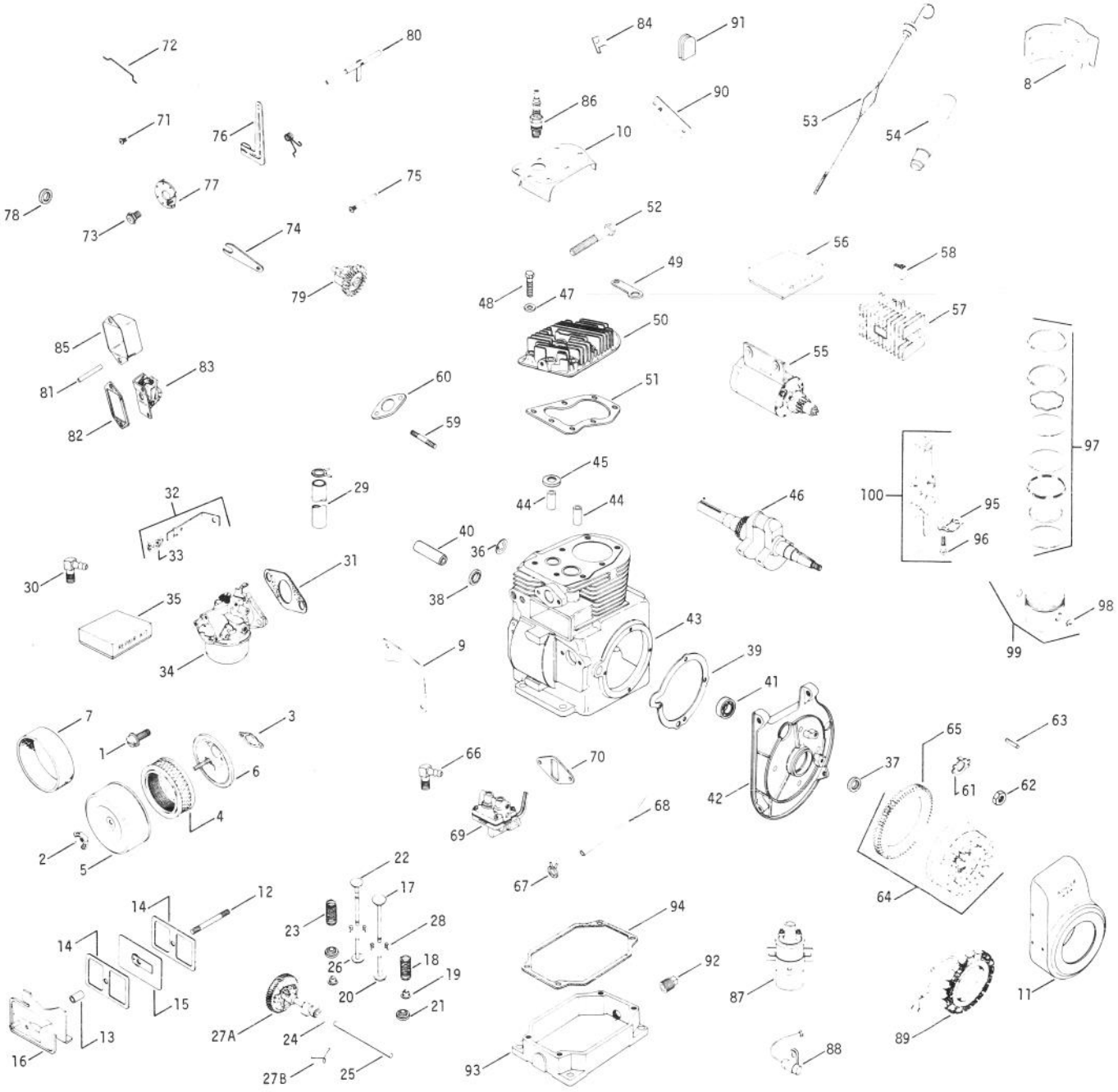

ENGINE KOHLER MODEL NO. K-181S SPEC. NO. 30658D (Continued)

Ref. No.	Part No.	Description	No. Used
88	230722	Condenser	1
89	237878	Kit, Stator	1
90	234994	Plate, Mounting	1
91	220297	Grommet	1
		Oil Pan Group	
92	X-75-28	Plug, Pip 1/4	1
93	230021	Pan, Oil	1
94	41 041 03	Gasket, Pan	1
		Piston and Rod Group	
95	230525	Lock, Connecting Rod	1
96	230526	Screw, Connecting Rod	2
97	232575	Ring Set Std.	1
	232576	Ring Set .010	
	232577	Ring Set .020	
	232578	Ring Set .030	

Ref. No.	Part No.	Description	No. Used
98	230004	Retainer, Pin	2
99	A-234950	Piston – Assembly Std. (Includes Pin & Retainers)	1
	A-234952	Piston – Assembly .003 (Includes Pin & Retainers)	
	A-234954	Piston – Assembly .010 (Includes Pin & Retainers)	
	A-234956	Piston –Assembly .020 (Includes Pin & Retainers	
	A-234958	Piston – Assembly .030 (Includes Pin & Retainers)	
100	A-231801	Rod, Connecting Std.	1
	A-231801-10	Rod, Connecting .010	
	41 522 07	Short Block	
	41 755 06	Overhaul Gasket Set	

The Toro Promise

A ONE YEAR LIMITED WARRANTY ON COMMERCIAL PRODUCTS OTHER THAN WALK ROTARY MOWERS, TRIMMERS AND BLOWERS.

The Toro Company promises to repair any TORO Product if defective in materials or workmanship. The following time periods from the date of purchase apply:

Commercial Products	1 Year
Hevi-Duty Walk Rotary Mowers	90 Days
Trimmers and Blowers	90 Days

The costs of parts and labor are included, but the customer pays the transportation costs on walk rotary mowers, trimmers and blowers.

If you feel your TORO product is defective and wish to rely on The Toro Promise, the following procedure is recommended:

1. Contact your Authorized TORO Distributor or Commercial Dealer (the Yellow Pages of your telephone directory is a good reference source).
2. The TORO Distributor or Commercial Dealer will advise you on the arrangements that can be made to inspect and repair your product.
3. The TORO Distributor or Commercial Dealer will inspect the product and advise you whether the product is defective and, if so, make all repairs necessary to correct the defect without an extra charge to you.

If for any reason you are dissatisfied with the distributor's analysis of the defect or the service performed, you may contact us.

Write:

TORO Commercial Products Service Department
8111 Lyndale Avenue South
Minneapolis, Minnesota 55420

The above remedy of product defects through repair by an Authorized TORO Distributor or Commercial Dealer is the purchaser's sole remedy for any defect.

THERE IS NO OTHER EXPRESS WARRANTY. ALL IMPLIED WARRANTIES OF MERCHANTABILITY AND FITNESS FOR USE ARE LIMITED TO THE DURATION OF THE EXPRESS WARRANTY.

Some states do not allow limitations on how long an implied warranty lasts, so the above limitation may not apply to you.

This Warranty applies only to parts or components which are defective and does not cover repairs necessary due to normal wear, misuse, accidents, or lack of proper maintenance. Regular, routine maintenance of the unit to keep it in proper condition is the responsibility of the owner.

All warranty repairs reimbursable under the Toro Promise must be performed by an Authorized TORO Commercial Dealer or Distributor using Toro approved replacement parts.

Repairs or attempted repairs by anyone other than an Authorized TORO Distributor or Commercial Dealer are not reimbursable under the Toro Promise. In addition, these unauthorized repair attempts may result in additional malfunctions, the correction of which is not covered by warranty.

THE TORO COMPANY IS NOT LIABLE FOR INDIRECT, INCIDENTAL OR CONSEQUENTIAL DAMAGES IN CONNECTION WITH THE USE OF THE PRODUCT INCLUDING ANY COST OR EXPENSE OF PROVIDING SUBSTITUTE EQUIPMENT OR SERVICE DURING PERIODS OF MALFUNCTION OR NON-USE.

Some states do not allow the exclusion or limitation of incidental or consequential damages, so the above limitation or exclusion may not apply to you.

This warranty gives you specific legal rights, and you may also have other rights which vary from state to state.

COUNTRIES OTHER THAN THE UNITED STATES OR CANADA

Customers who have purchased TORO products exported from the United States or Canada should contact their TORO Distributor (Dealer) to obtain guarantee policies for your country, province or state. If for any reason you are dissatisfied with your Distributor's service or have difficulty obtaining guarantee information, contact the TORO importer. If all other remedies fail, you may contact us at The Toro Company.

International Group
Service Department
One Corporate Center
7401 Metro Boulevard
Minneapolis, Minnesota 55435 U.S.A.

Compliance with Radio Interference Regulations Certified.
Certifie Conforme au Reglement sur le Brouillage Radioelectrique.

PRODUCT CHANGES

In an effort to make improvements available to TORO owners as quickly as possible, minor changes are incorporated into Toro's products from time to time that do not become immediately shown in the Parts Catalog. If such a change apparently has been made in your unit, which is not reflected in your manual, see your TORO Distributor for information and part numbers.

IDENTIFICATION AND ORDERING

Model and Serial Numbers

The Sand Pro has two identification numbers: a model number and a serial number. The two numbers are stamped on a plate which is located on left hand fender. In any correspondence concerning the Sand Pro supply model and serial numbers to assure that correct information and replacement parts are obtained.

To order replacement parts from an Authorized TORO Distributor, supply the following information:

1. Model and serial numbers of the Sand Pro.
2. Part number, description, and quantity of part(s) desired.

NOTE: Do not order by reference number if a parts catalog is being used; use the PART NUMBER.

Keep Your TORO All Toro Genuine TORO PARTS & ACCESSORIES ***Insist on Genuine Toro Parts***

INDEX

Description	Page
Frame Assembly	1-2
Engine Assembly	3
Pump Assembly No. 37-8040	4
Instrument Panel and Wiring Diagram	5-6
Hydraulic Tank and Systems Diagram	7-8
Hydraulic Drive Motor Rear No. 10-8010	9
Hydraulic Cylinder No. 10-7910	10
Control Valve No. 43-1950	11
Front Steering Fork and Motor Assembly	12
Hydraulic Drive Motor (Front) No. 17-2450	13
Rake Assembly Model No. 08811	14
Hitch Kit Model No. 08833	15
Drag Mat Kit Model No. 08844	16
Edger Kit Model No. 08822	17
Spiker Model No. 08855	18-19
Finish Grader Kit Model No. 08867	20
Prong Rake Kit No. 42-3960	21
Engine Kohler Model No. K-181S Spec No. 30658D	22-25

MAINTENANCE RECORD

Date	Hours Used	Oil Change	Air Cleaner Service	Lubri-cation	Hydraulic System	Notes