CANADA & INTERNATIONAL FORM NO. 3311-644

TORO®

MODEL NO. 38250-1000001 & UP

PARTS CATALOG

421 SNOWTHROWER

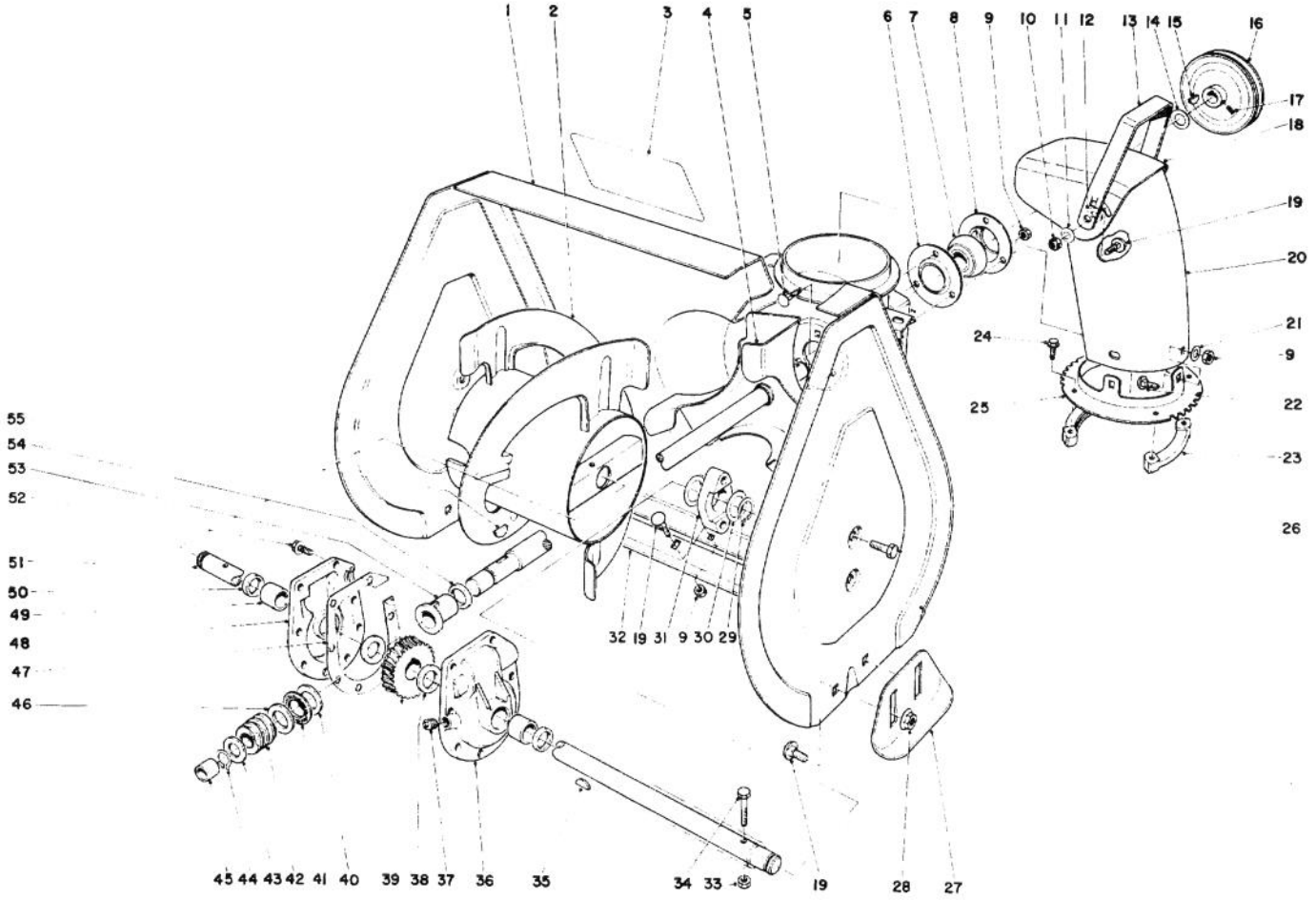

AUGER ASSEMBLY

Ref. No.	Part No.	Description	No. Used
1	37-6650	Auger Housing	1
2	39-1180	Auger R.H.	1
*	39-1190	Auger L.H.	1
3	29-6350	Decal – Auger Warning	1
4	37-6990	Shaft & Impeller	1
5	3230-10	Carriage Bolt	3
6	26-6110	Bearing Flange Front	1
7	26-6100	Ball Bearing	1
8	26-6120	Bearing Flange Rear	1
9	3296-29	Locknut	11
10	32152-1	Locknut	2
11	3290-340	Washer Belleville	2
12	20-4320	Washer Rubber	2
13	37-8930	Handle Deflector	1
14	3-0737	Washer	1

Ref. No.	Part No.	Description	No. Used
15	3257-5	Key	1
16	37-6890	Pulley	1
17	3242-4	Set Screw	2
18	37-8920	Deflector	1
19	3230-1	Carriage Bolt	11
20	37-8910	Chute – Discharge	1
21	3256-23	Washer	3
22	3230-18	Carriage Bolt	3
23	37-6490	Retainer – Chute Ring	3
24	27-0220	Self Tapping Screw	6
25	37-8940	Chute Ring	1
26	32144-11	Self Tapping Screw	4
27	40-8160	Skid	2
28	32128-20	Flange Nut	4
29	32151-36	Snap Ring	2

*Not Illustrated

COPYRIGHT © ALL RIGHTS RESERVED
The Toro Company – 1980
MINNEAPOLIS, MN 55420 – U.S.A.

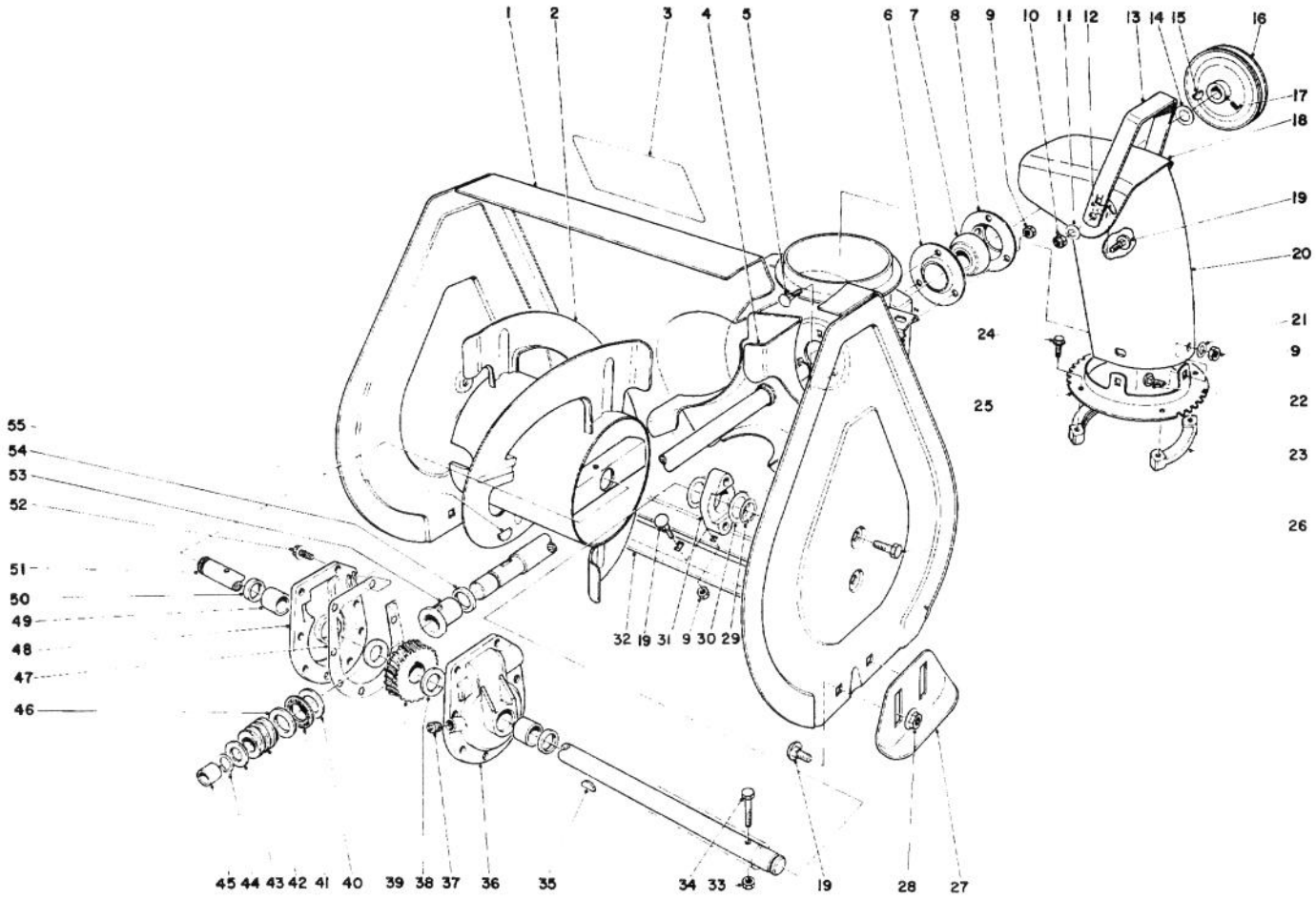

AUGER ASSEMBLY (Continued)

Ref. No.	Part No.	Description	No. Used
30	5-1550	Thrust Washer	4
31	37-6550	Auger Bearing	2
32	39-1550	Scraper Blade	1
33	32152-4	Locknut	2
34	321-10	Capscrew	2
35	3257-33	Woodruff Key	1
36	37-8860	Gear Case L.H. (Incl. Ref. #49 & 50)	1
37	281-1	Pipe Plug	1
38	252-71	Thrust Bearing	2
39	23-9050	Gear	1
40	257-3	Thrust Washer	1
41	252-76	Needle Thrust Bearing	1
42	5-7170	Worm	1
43	3-8664	Washer	1

Ref. No.	Part No.	Description	No. Used
44	32120-72	Retaining Ring	1
45	256-32	Bushing	1
46	252-80	Thrust Washer	1
47	40-8330	Gasket	1
48	37-8850	Gear Case R.H. (Incl. Ref. #49 & 50)	1
49	256-237	Bushing	2
50	7-0045	Oil Seal	2
51	37-6800	Shaft – Auger	1
52	32144-41	Self Tapping Screw	8
53	37-6560	Bushing – Input	1
54	237-87	Seal	1
55	3257-23	Key – Woodruff	1
*	37-6960	Gear Case Assembly Complete	1

*Not Illustrated

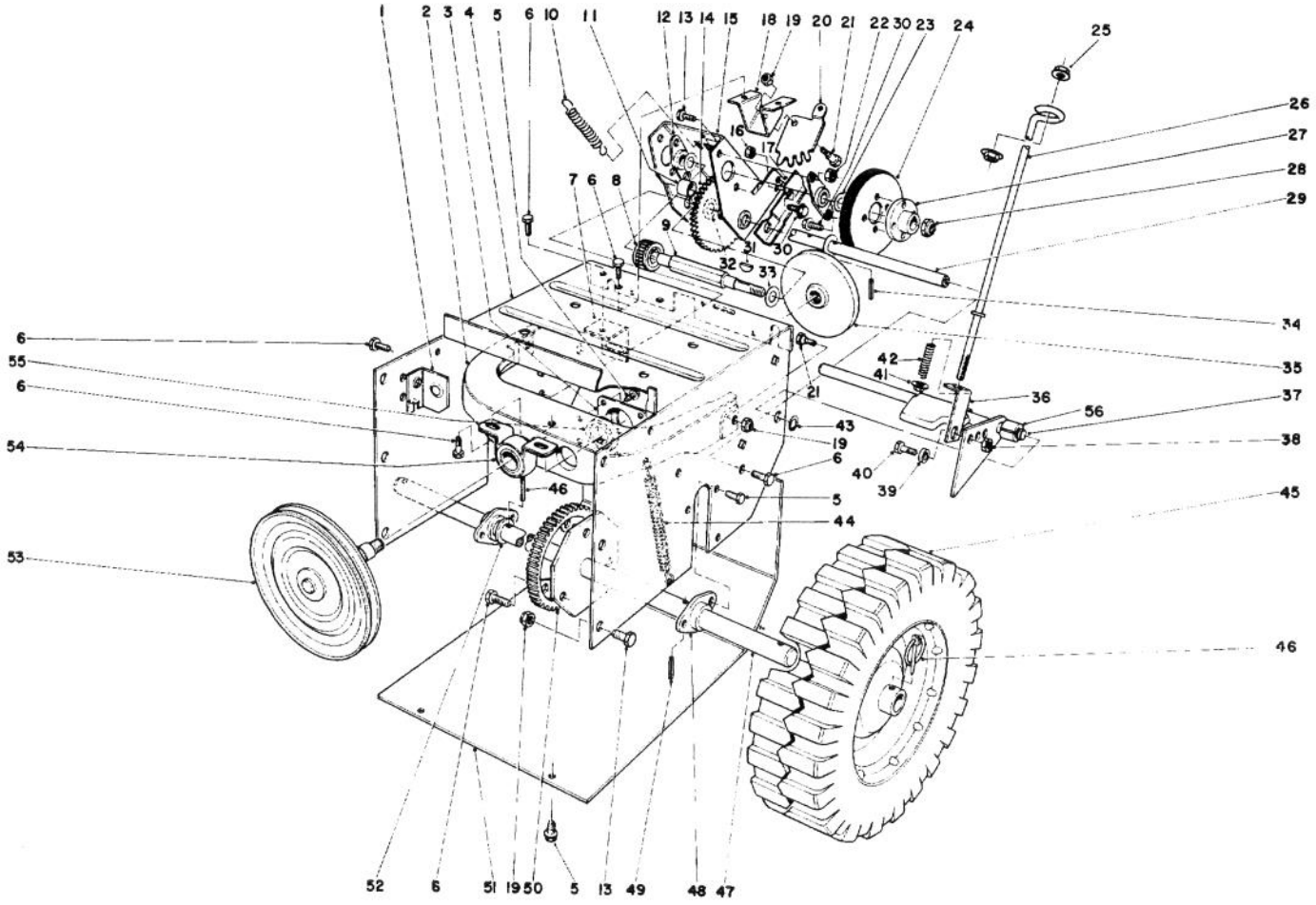

TRACTION ASSEMBLY

Ref. No.	Part No.	Description	No. Used
1	37-9060	Mounting – Clutch Rod Front	1
2	37-6740	Frame – Friction Plate	1
3	37-6730	Cup – Bearing	1
4	37-8900	Traction Frame	1
5	12-3270	Self Tapping Screw	12
6	32144-11	Self Tapping Screw	12
7	37-9070	Mounting Clutch Rear	1
8	37-6500	Sliding Gear	1
9	37-6780	Hex Shaft	1
10	37-8880	Spring – Traction Disengage	1
11	256-86	Bushing	1
12	20-1620	Bearing Friction Wheel	2
13	322-2	Capscrew	10
14	37-9160	Intermediate Gear (Incl. Ref. #11)	1
15	39-1230	Bracket Sliding	1
16	3296-16	Locknut	1
17	39-1250	Cam Receiver	1
18	37-8790	Mounting Quadrant Gear	1
19	3296-29	Locknut	9
20	37-8800	Quadrant Gear	1
21	37-8770	Shoulder Bolt	3
22	32152-1	Locknut	4
23	36-4790	Thrust Washer	1
24	37-6570	Friction Wheel	1
25	32128-33	Flange Nut	2
26	39-3060	Lower Traction Rod	1
27	39-1520	Hub – Friction Wheel Mount	1
28	3296-48	Locknut	1
29	37-6760	Shaft – Pivot	1

Ref. No.	Part No.	Description	No. Used
30	11-9760	Self Tapping Screw	5
31	3257-24	Key	1
32	10-9280	Thrust Washer	2
33	5-7570	Thrust Washer	2
34	32121-45	Roll Pin	2
35	38-0800	Friction Plate	1
36	38-4490	Bracket Traction	1
37	40-8320	Traction Engagement Arm	1
38	32152-4	Locknut	1
39	38-4510	Spacer – Traction Bracket	1
40	321-4	Capscrew	1
41	32128-10	Flange Locknut	1
42	38-4520	Spring Compression	1
43	32151-61	Retaining Ring	1
44	37-8870	Spring – Friction Plate Frame	1
45	38-1400	Wheel	2
46	3290-243	Klik Pin	2
47	37-6970	Axle Shaft	1
48	37-6850	Axle Bearing	2
49	32121-31	Roll Pin	2
50	37-6520	Axle Gear	1
51	37-6830	Bottom Cover	1
52	3-8664	Thrust Washer	2
53	40-8190	Pulley and Shaft	1
54	38-4470	Bushing Assembly	1
55	38-7820	Bearing	1
56	40-9680	Spacer	1
*	37-7010	Tire Chain Kit (Optional)	1
*	8-8519	Loose Parts	1

*Not Illustrated

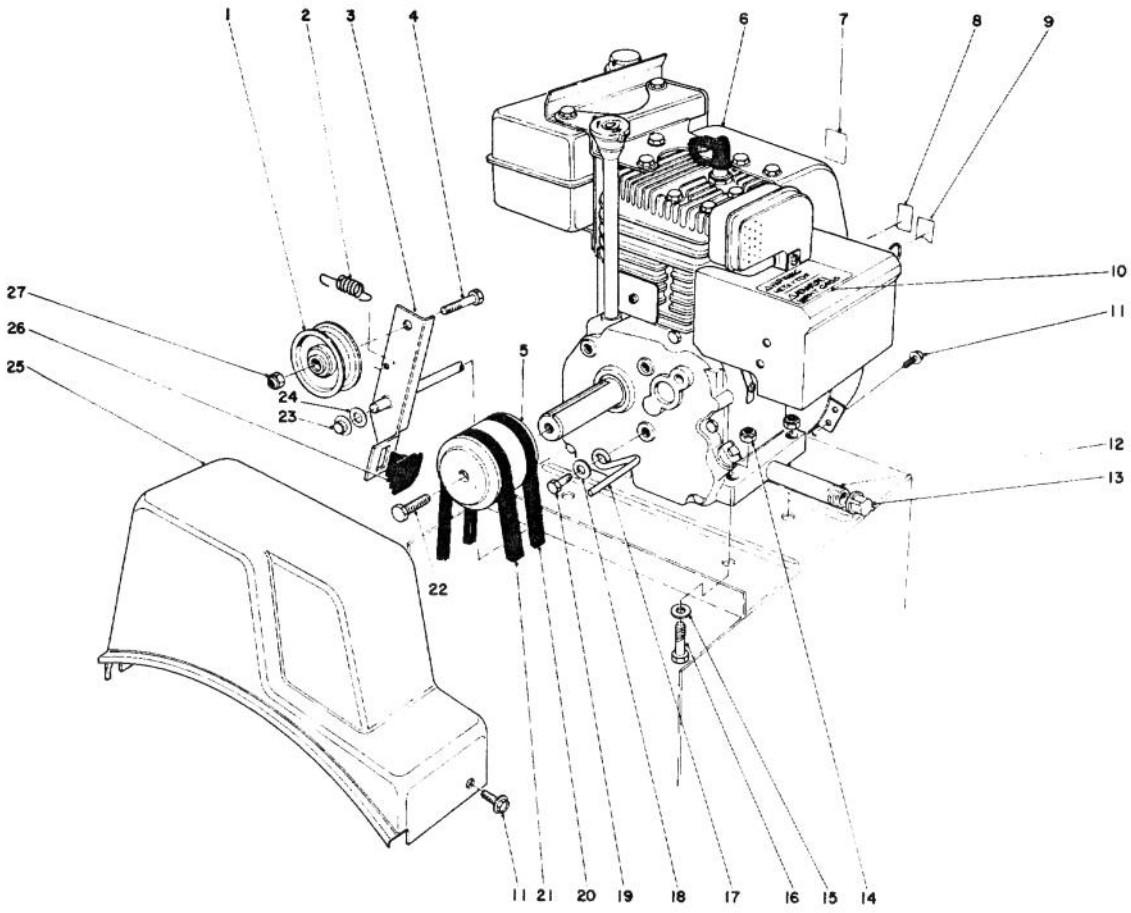

ENGINE ASSEMBLY

Ref. No.	Part No.	Description	No. Used
1	3-4244	Idler Pulley	1
2	10-3890	Spring – Auger Disengage	1
3	8-8649	Auger Clutch (Incl. Ref. #26)	1
4	323-29	Capscrew	1
5	40-8220	Engine Pulley	1
6	221-664	Engine	1
7	39-3860	Decal – Primer	1
8	37-8890	Decal – Throttle	1
9	39-3850	Decal – Choke	1
10	29-6390	Decal – Hot Surface Warning	1
11	12-3270	Self Tapping Screw	3
12	289-8	Pipe Nipple	1
13	288-2	Pipe Cap	1

Ref. No.	Part No.	Description	No. Used
14	3296-29	Locknut	4
15	3256-23	Washer	5
16	322-7	Capscrew	4
17	37-8990	Belt Retainer	1
18	3255-8	Lockwasher	1
19	3210-3	Capscrew	1
20	37-9090	V-Belt Traction	1
21	37-9080	V-Belt Auger	1
22	41-8530	Screw – Special	1
23	3290-320	Push-on	1
24	3256-24	Washer	1
25	37-6900	Belt Cover	1
26	40-8140	Brake Pad – Molded	1
27	32152-2	Locknut	1

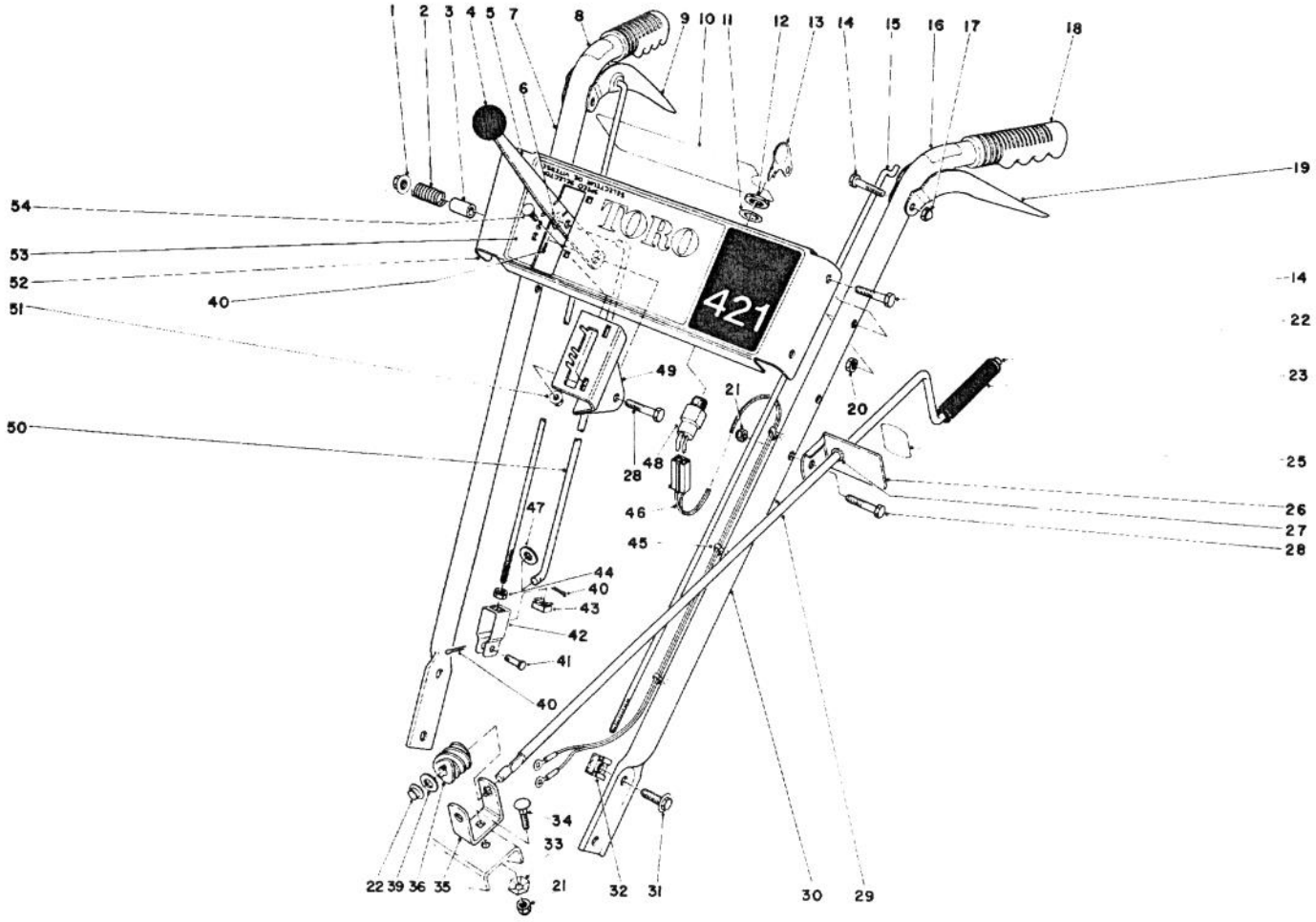

HANDLE ASSEMBLY

Ref. No.	Part No.	Description	No. Used
1	32128-13	Locknut	1
2	37-9150	Spring	1
3	40-8130	Spacing – Speed Control	1
4	233-21	Knob	1
5	37-8820	Speed Selector	1
6	3256-2	Washer	1
7	37-8710	Handle Right	1
8	39-1130	Decal – Auger Engage	1
9	39-4810	Lever – Auger Control	1
10	37-9140	Decal – Escutcheon Back	1
11	3254-5	Lockwasher	1
12	218-461	Nut	1
13	33-2010	Key	2
14	321-37	Capscrew	6
15	39-3070	Link Upper	2
16	39-1140	Decal – Traction Engage	1
17	32111-7	Cap Nut	2
18	37-9110	Grips	2
19	39-4820	Lever – Traction Control	1
20	32152-4	Locknut	4
21	3296-29	Locknut	2
22	3290-320	Push-on Speed Nut	2
23	40-8230	Chute Control Grip	1
25	29-6370	Decal – Chute Direction	1
26	6-3069	Bracket – Chute Control Mtg. (Incl. Ref. #25 & 27)	1

Ref. No.	Part No.	Description	No. Used
27	256-249	Nyliner	1
28	322-7	Capscrew	1
29	40-8270	Rod – Chute Control	1
30	37-8720	Handle Left	1
31	3234-14	Flange Screw	4
32	3290-196	Retained Nut	4
33	3290-238	Pyramidal Washer	1
34	3230-1	Carriage Bolt	1
35	40-8280	Bracket – Worm	1
36	40-8250	Worm Gear – Chute	1
39	3256-24	Washer	1
40	3272-4	Cotter Pin	2
41	283-3	Clevis Pin	1
42	39-3080	Clevis	1
43	32115-5	Retained Nut	1
44	3218-1	Jam Nut	1
45	3290-378	Tie Wrap	2
46	37-8980	Wire Assembly	1
47	3256-23	Washer	1
48	25-6420	Key Switch	1
49	39-1280	Mount – Speed Selector	1
50	39-7570	Rod – Speed Selector	1
51	32128-32	Flange Locknut	2
52	39-1260	Panel – Escutcheon	1
53	39-1270	Decal – Escutcheon	1
54	3229-22	Carriage Bolt	2

ENGINE TECUMSEH MODEL HS40-55513G

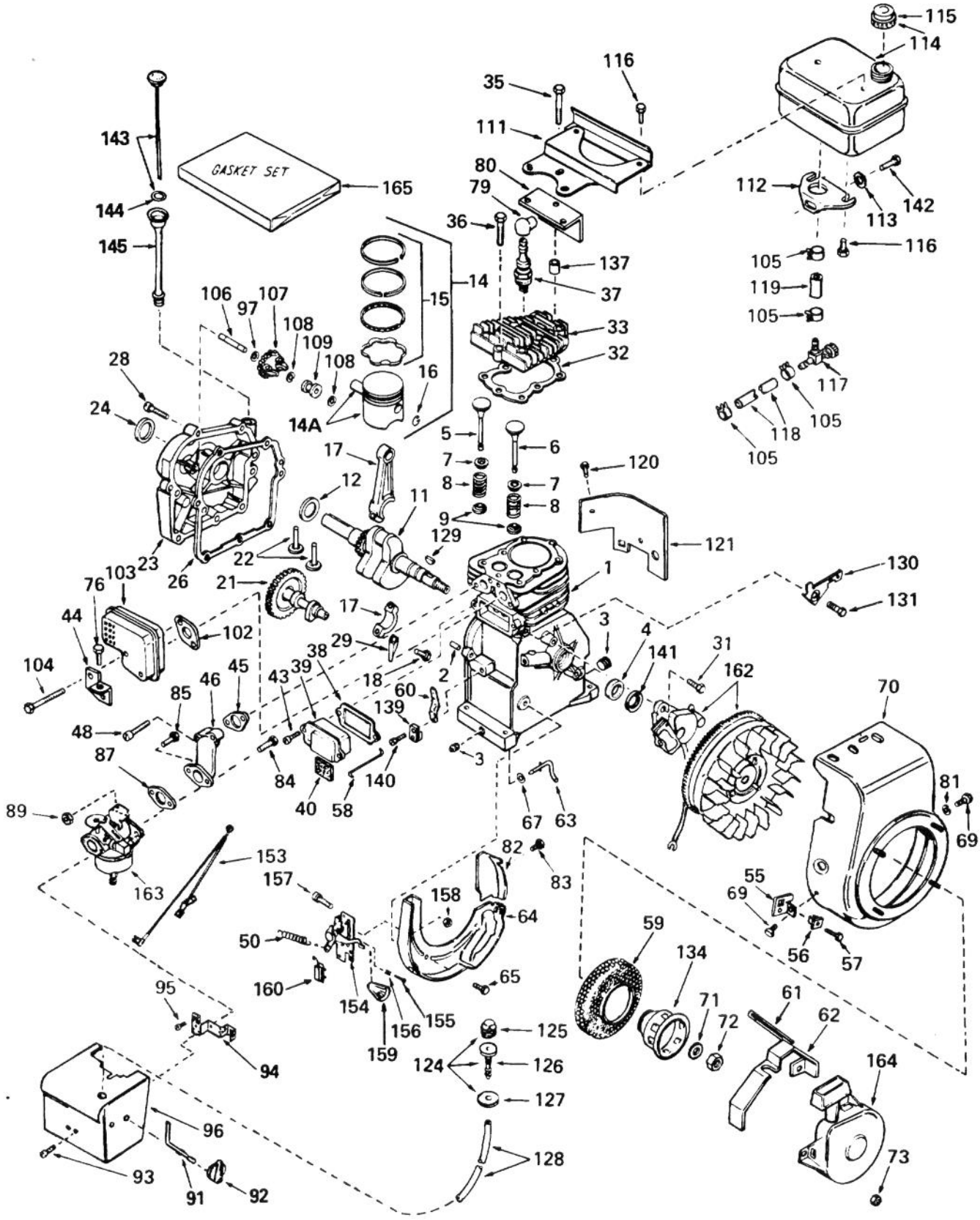

ENGINE TECUMSEH MODEL HS40-55513G

Ref. No.	Part No.	Description	No. Used
1	33014A	Cylinder Assembly (Incl. Ref. #2, 3 & 4)	1
2	26727	Pin, Dowel	2
3	27642	Plug (Oil Drain)	2
4	32600	Seal, Oil	1
5	32644	Valve, Intake (Std.) (Incl. Ref. #7, 8 & 9)	1
5	32645	Valve, Intake (1/32" Oversize) (Incl. Ref. #7, 8 & 9)	1
6	29313B	Valve, Exhaust (Std.) (Incl. Ref. #7, 8 & 9)	1
6	29315B	Valve, Exhaust (1/32" Oversize) (Incl. Ref. #7, 8 & 9)	1
7	31671	Cap, Upper Valve Spring	2
8	31672	Spring, Valve	2
9	31673	Cap, Lower Valve Spring	2
11	32890A	Crankshaft Assembly	1
12	32323	Washer, Thrust	1
14	34520	Piston, Pin & Ring Assembly (Incl. Ref. #14A, 15 & 16) (Std.)	1
14	34521	Piston, Pin & Ring Assembly (Incl. Ref. #14A, 15 & 16) (.010 Oversize)	1
14	34522	Piston, Pin & Ring Assembly (Incl. Ref. #14A, 15 & 16) (.020 Oversize)	1
14A	32603B	Piston & Pin Assembly (Incl. Ref. #16) (Std.)	1
14A	32604B	Piston & Pin Assembly (Incl. Ref. #16) (.010 Oversize)	1
14A	32605B	Piston & Pin Assembly (Incl. Ref. #16) (.020 Oversize)	1
15	32606	Ring Set, Piston (Std.)	1
15	32607	Ring Set, Piston (.010 Oversize)	1
15	32608	Ring Set, Piston (.020 Oversize)	1
16	20381	Ring, Piston Pin Retaining	2
17	32875	Rod Assembly, Connecting (Incl. Ref. #18 & 29)	1
18	32610A	Screw, Connecting Rod	2
21	33158	Camshaft (Comp. Release)	1
22	27241	Lifter, Valve	2
23	34674	Cover, Cylinder (Incl. Ref. #24 & 106)	1
24	27897	Seal, Oil	1
26	*27677	Gasket, Cylinder Cover	1
28	650488	Screw, Hex Hd.	7
29	32654	Dipper, Oil	1
31	650489	Screw, Hex Hd.	2
32	*33015	Gasket, Cylinder Head	1
33	33016	Head, Cylinder	1
35	650694A	Screw, Hex Flange Hd.	5
36	6021A	Screw, Hex Flange Hd.	3
37	33636	Plug, Spark (Champion J-8 or Equivalent) Except for Canada	1
37	34251 Canada	Resistor Spark Plug (Canadian Regulations require RJ-17LM resistor spark plug.)	1
38	*31619	Gasket, Valve Spring Cover	1
39	31337	Breather Assembly (Incl. Ref. #38 & 40)	1
40	31410	Element, Breather	1
43	650128	Screw, Fil. Hd.	2
44	33333	Bracket, Carburetor Cover	1
45	*32649	Gasket, Intake	1
46	32859	Pipe, Intake	1
48	650664	Screw, Fil. Hd.	2
50	31426	Spring, Extension	1
55	34126	Bracket, Grommet Mounting	1
56	28545	Grommet	1
57	650643	Screw, Pan Hd. Self-Tap	1
58	32698	Link, Governor-to-throttle	1
59	33668	Screen, Starter Cup	1
60	31510	Lever, Governor	1
61	32576	Seal, Snow Guard	1
62	34127	Guard, Starter	1
63	31334	Rod, Governor	1
64	†33342	Baffle, Blower Housing	1
65	650561	Screw, Hex Washer Hd.	2
67	28277	Washer, Flat	1
69	29212	Screw, Hex Hd.	2
70	33663B	Housing, Blower	1
71	650763	Washer, Belleville	1
72	650607	Nut, Flywheel	1
73	29752	Nut & Lockwasher Assembly	4
76	650735	Screw, Hex Hd.	1
79	610118	Cover, Spark Plug	1
80	33344	Baffle, Heat	1
81	650168	Washer, Flat	1
82	33341	Baffle, Extension	1
83	650701	Screw, Hex Washer Hd. Self-drilling	1
84	6202	Screw, Hex Hd.	1
85	650601	Screw, Fil. Hd.	1
87	*26756	Gasket, Carburetor	1
89	29752	Nut & Lockwasher Assembly	2
91	34582	Rod, Choke	1
92	34585	Knob, Control	1
93	650257	Screw, Pan Hd.	2
94	34583	Bracket, Choke	1
95	28820	Screw, Fil. Hd.	2
96	34134	Cover, Carburetor	1
97	30590A	Washer, Flat	1
102	*26754	Gasket, Muffler	1
103	32648	Muffler	1
104	650327	Screw, Fil. Hd.	2
105	26460	Clamp, Fuel Line	4
106	30574	Shaft, Mechanical Governor	1
107	30591	Gear Assembly, Governor (Incl. Ref. #97)	1

†In original production the speed control assembly is riveted to the blower housing baffle. Replacement speed control assembly includes screws and nuts for mounting. Replacement baffle has threaded holes.

ENGINE TECUMSEH MODEL HS40-55513G

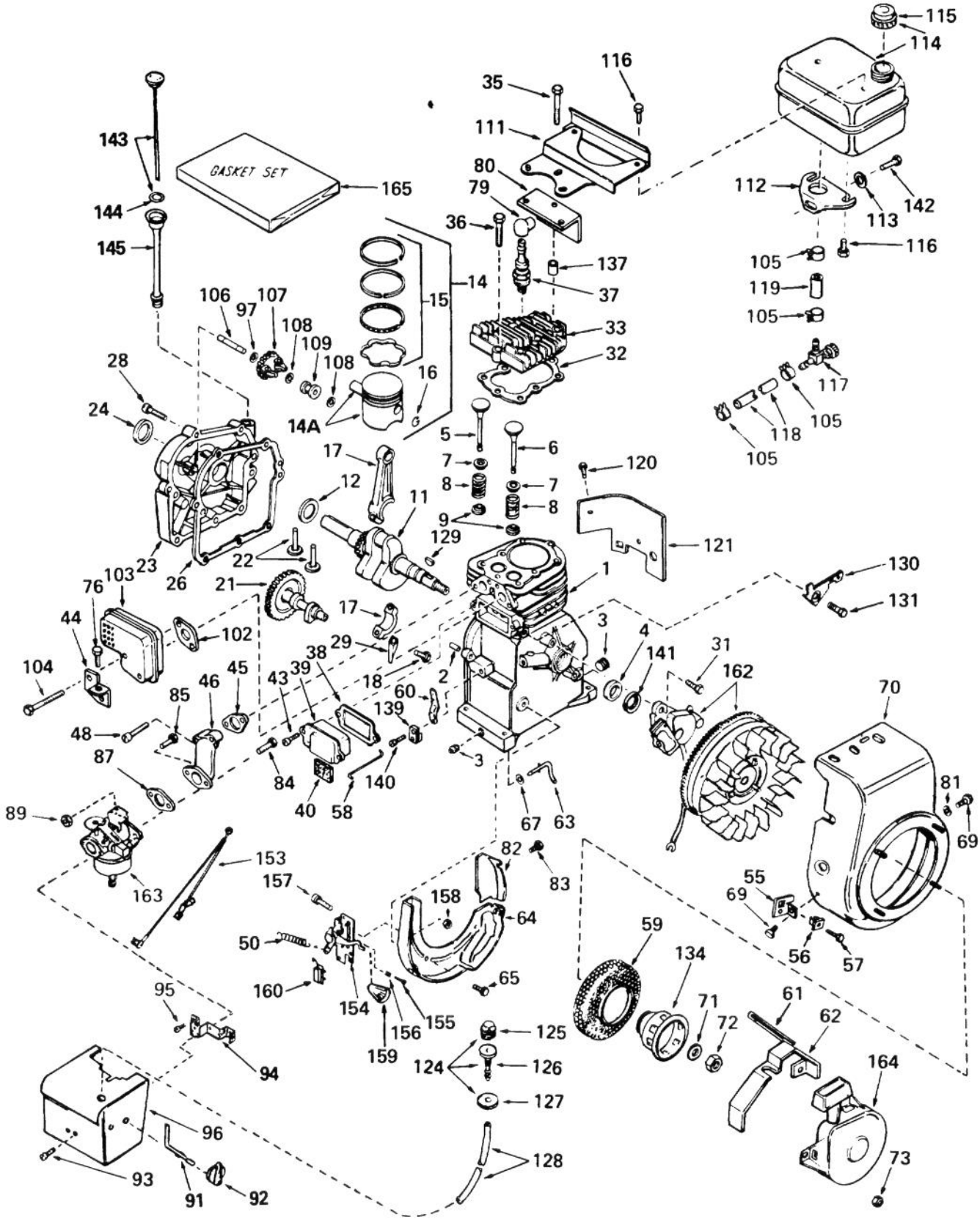

ENGINE TECUMSEH MODEL HS40-55513G (Continued)

Ref. No.	Part No.	Description	No. Used
108	29193	Ring, Retaining	2
109	30588A	Spool, Governor	1
111	28371B	Bracket, Fuel Tank – Upper	1
112	32762	Bracket, Fuel Tank – Lower	1
113	650675	Washer, Flat	1
114	33120	Tank Assembly, Fuel (Incl. Ref. #115 & 116)	1
115	30998B	Cap, Fuel Tank	1
116	650665	Screw, Hex Washer Hd. Self-Tap	4
117	32961	Shut-off Valve, Fuel	1
118	30705	Line, Fuel	1
119	29774	Line, Fuel	1
120	650128	Screw, Fil. Hd.	1
121	29745	Extension, Blower Housing	1
124	32182	Primer Assembly (Incl. Ref. #125, 126 & 127)	1
125	32183	Bulb, Primer	1
126	32184	Body, Primer	1
127	32312	Retainer, Primer Bulb	1
128	32180B	Line, Primer	1
129	610951	Key, Flywheel	1
130	34212	Bracket, Hold Down	1
131	30200	Screw, Hex Washer Hd. Self-Tap	1
134	33667	Cup, Starter	1
137	28212	Spacer	2
139	31335	Clamp, Governor Lever	1
140	650548	Screw, Hex Washer Hd.	1
141	33876	Gasket, Stator	1
142	650805	Screw, Hex Hd. W/Belleville Washer	1
143	34676	Dipstick	1
144	33590	"O" Ring	1
145	33893A	Tube, Oil Fill	1
153	34241	Wire, Ground	1
154	†33858A	Control Assembly, Speed (Incl. Ref. #155 thru 158 & 160)	1
155	650549	Screw, Fil. Hd.	1
156	31342	Spring, Compression	1
157	†650139	Screw, Fil. Hd.	2
158	†30322	Nut & Lockwasher Assembly	2
159	32410	Knob, Speed Control	1
160	610973	Terminal Assembly	1
162	610944A	Magneto (The complete magneto is not available as an assembly. The magneto number is shown for reference purposes only. Order component parts individually, as shown in parts list.)	1
163	632113	Carburetor (Incl. Ref. #87)	1
164	590473	Starter Assembly, Rewind	1
165	33240	Gasket Set (Incl. Items Marked *)	1

†In original production the speed control assembly is riveted to the blower housing baffle. Replacement speed control assembly includes screws and nuts for mounting. Replacement baffle has threaded holes.

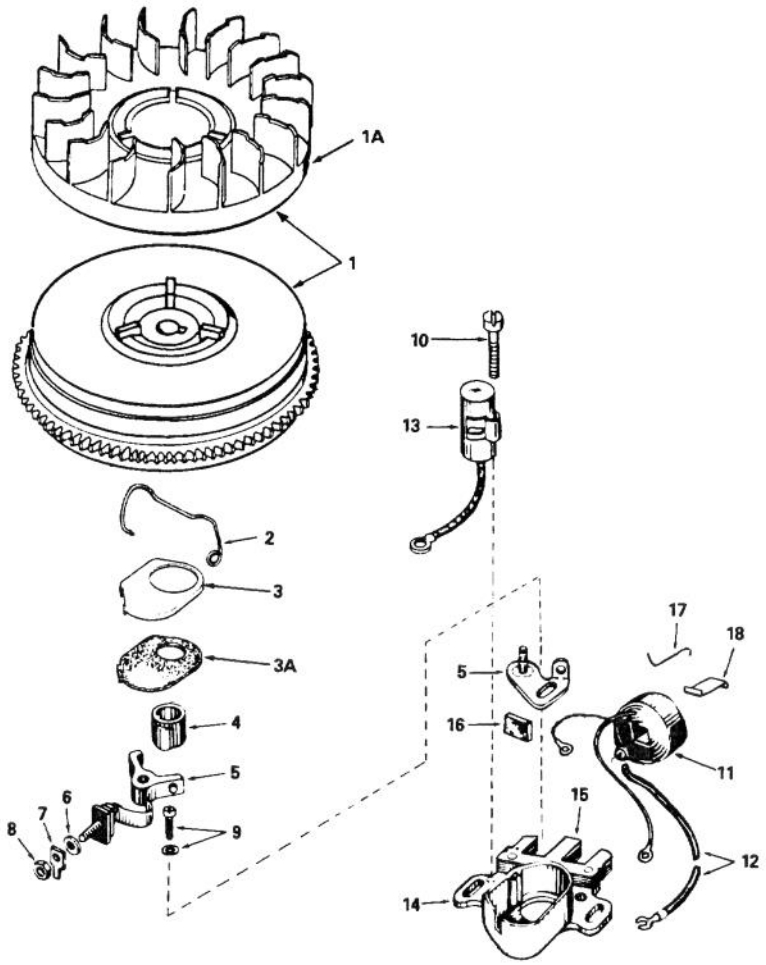

*MAGNETO NO. 610944A

Ref. No.	Part No.	Description	No. Used
1	33701B	Flywheel (Incl. Ref. #1A, 3 & 3A)	1
1A	610933	Fan	1
2	30551	Spring, Breaker Box Dust Cover	1
3	610947	Cover, Dust	1
3A	610950	Gasket, Dust Cover	1
4	30992	Cam, Breaker	1
5	30547A	Contact Assy., Breaker	1
6	610385	Washer, Terminal	1
7	33356	Tab, Ground Terminal	1
8	610408	Nut, Terminal	1
9	29181	Screw & Washer, Breaker	1

Ref. No.	Part No.	Description	No. Used
10	610593	Screw, Condenser	1
11	30560A	Coil Assembly (Incl. Ref. #12)	1
12	30554	Wire, Lead	1
13	30548B	Condenser	1
14	30545	Core & Plate	1
15	30561B	Stator Assembly (Incl. Ref. #2, 3, 3A, 5-14 & 16-18)	1
16	30549	Felt, Cam Wiper	1
17	31311	Clip, Coil Locking	1
18	29629	Spring, Coil Wedge	1

*The complete magneto is not available as an assembly. The magneto number is shown for reference purposes only. Order component parts individually, as shown in parts list.

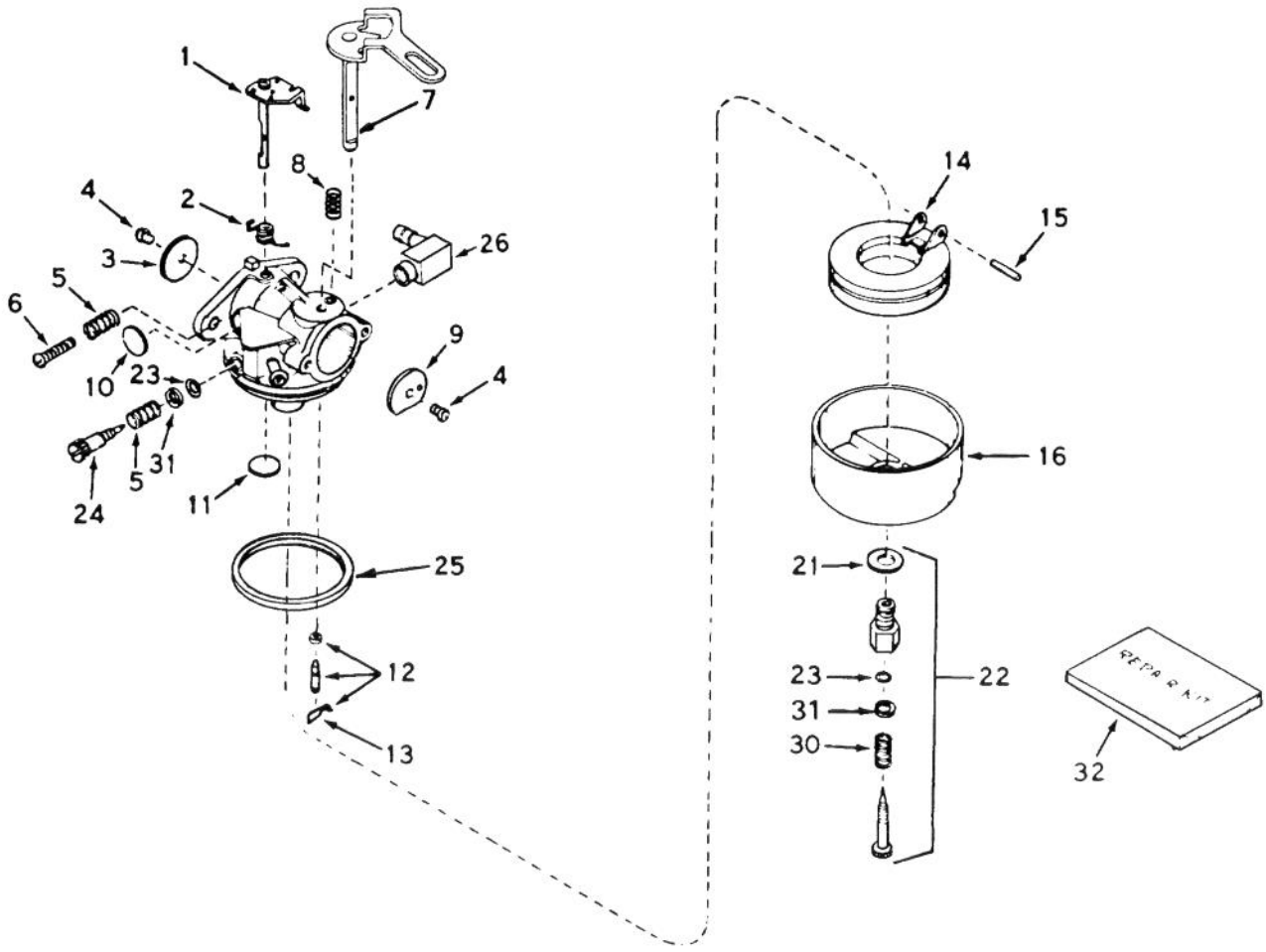

CARBURETOR NO. 632113

Ref. No.	Part No.	Description	No. Used
1	631615	Shaft & Lever Assy., Throttle	1
2	632016	Spring, Throttle Return	1
3	631036	Shutter, Throttle	1
4	650506	Screw	2
5	630766	Spring, Idle Regulating Screw	2
6	650417	Screw, Idle Regulating	1
7	632108	Shaft & Lever Assy., Choke	1
8	630735	Spring, Choke Stop	1
9	631815	Shutter, Choke	1
10	*630748	Plug, Welch	1
11	*631027	Plug, Welch	1
12	*631021	Inlet Needle, Seat & Clip Assy. (Incl. Ref. #13)	1
13	631022	Clip, Inlet Needle	1
14	632019	Float, Carburetor	1

Ref. No.	Part No.	Description	No. Used
15	*631024	Shaft, Float	1
16	631867	Bowl, Flat	1
21	27110	Gasket, Bowl-to-body	1
22	*31839	Adjustment Screw Assy., Main (Incl. Ref. #21, 23, 30 & 31)	1
23	*630740	"O" Ring, Adjustment Screw	2
24	*631078	Screw, Idle Adjustment	1
25	*631028	Gasket, Bowl-to-body	1
26	631807	Fitting, Fuel Inlet	1
30	630738	Spring, Main Adjustment Screw	1
31	630739	Washer, Flat	2
32	31840	Repair Kit (Incl. items marked *)	1

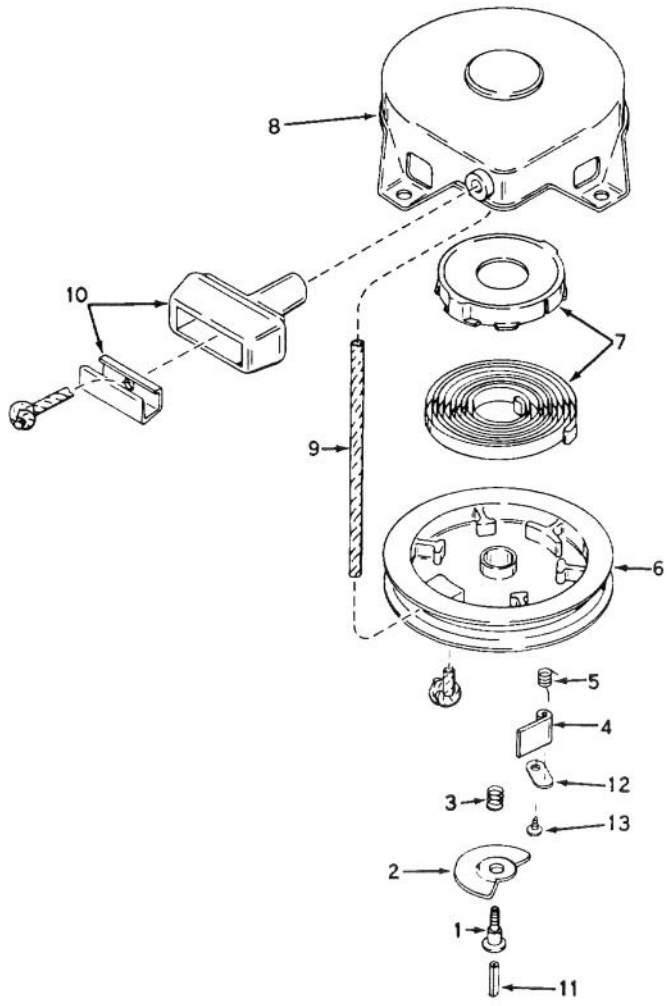

REWIND STARTER NO. 590473

Ref. No.	Part No.	Description	No. Used
1	590409A	Screw	1
2	590474	Cam, Dog	1
3	590411	Spring, Brake	1
4	590148	Dog, Starter	1
5	590475	Spring, Dog	1
6	590478	Pulley	1
7	590414	Spring & Keeper Assy.	1

Ref. No.	Part No.	Description	No. Used
8	590415	Housing Assy., Starter (Incl. Ref. #1)	1
9	590451A	Rope, Starter	1
10	590387	Handle Assy., Starter	1
11	590459	Pin, Centering	1
12	590476	Retainer, Dog	1
13	590477	Screw	1

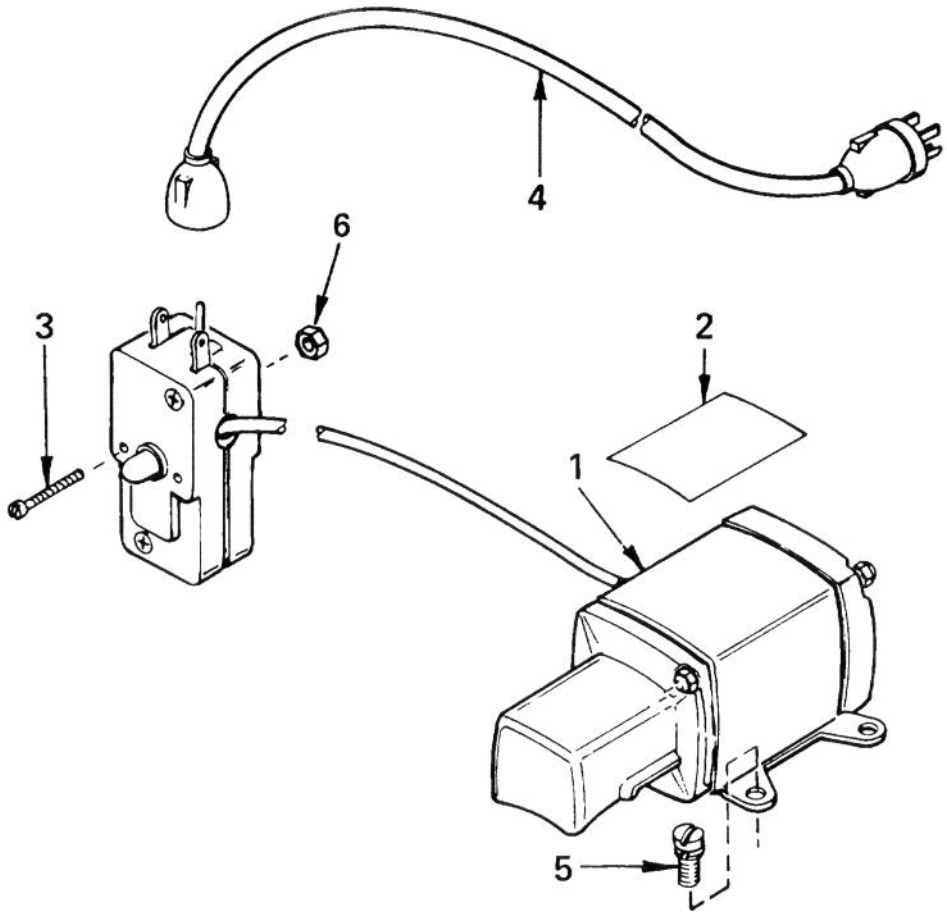

STARTER MOTOR KIT 110V MODEL 23-3790 (Canada Only)

Ref. No.	Part No.	Description	No. Used
1†	33517A	Motor, Cranking (CSA Approved)(Incl. #2 thru 6)	1
2†	34161	Decal	1
3†	650741	Screw, Hex Hd. Self Tap	2

Ref. No.	Part No.	Description	No. Used
4†	32450A	Cord, Extension	1
5†	650759	Screw, Hex Washer Hd.	3
6†	650742	Nut & Lockwasher	2

†Note: Obtain individual replacement parts from your local Tecumseh Dealer.

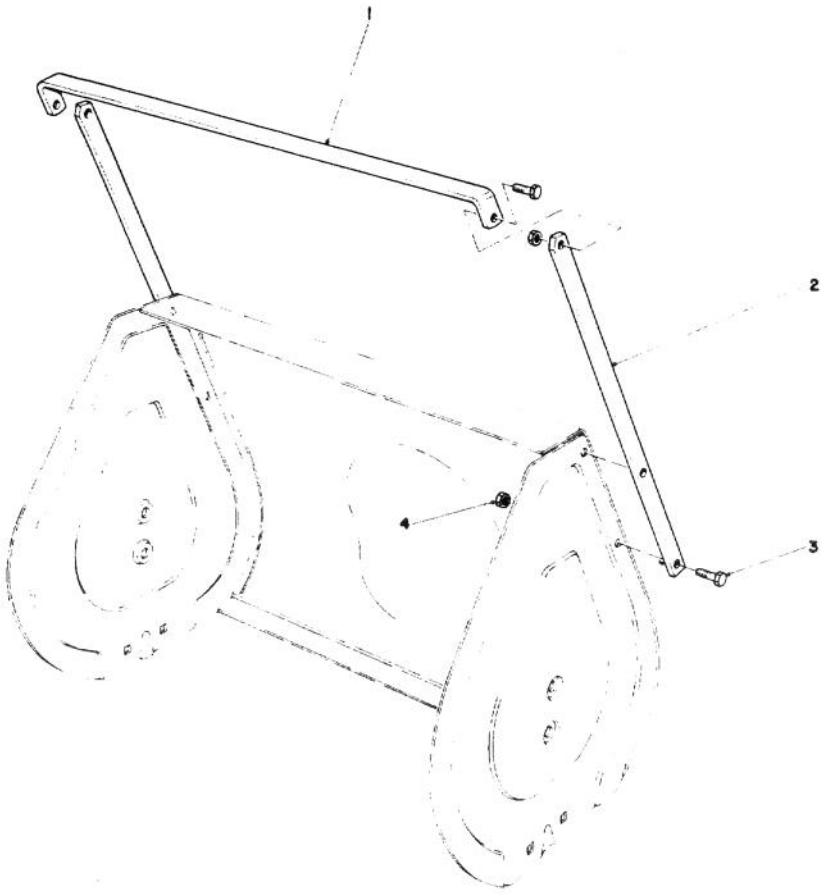

DRIFT BREAKER KIT NO. 37-7020

Ref. No.	Part No.	Description	No. Used
1	38-0760	Drift Breaker – Top	1
2	38-0750	Drift Breaker – Side	2

Ref. No.	Part No.	Description	No. Used
3	322-4	Capscrew	6
4	3296-29	Locknut	6

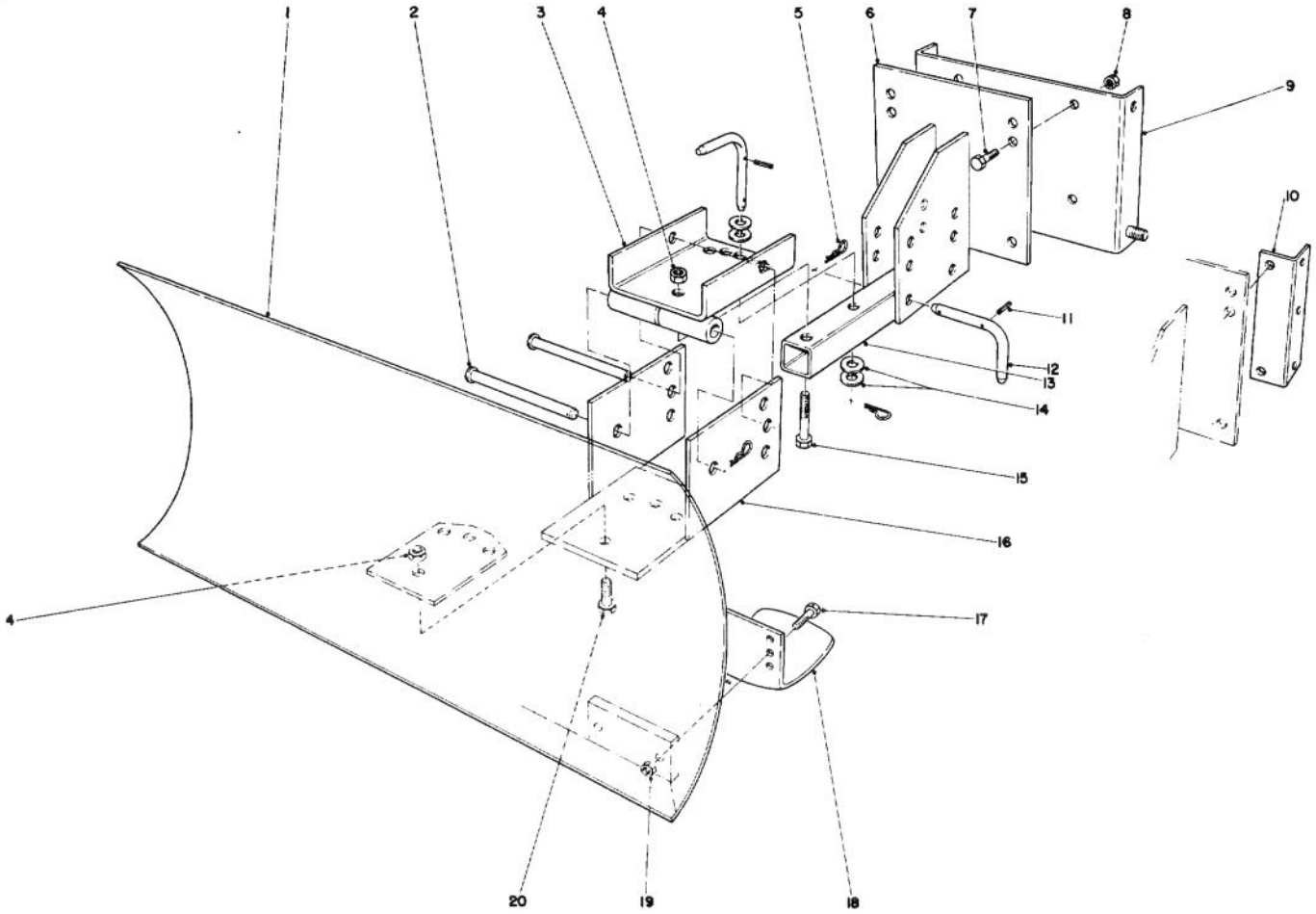

GRADER BLADE ASSEMBLY MODEL 59099

Ref. No.	Part No.	Description	No. Used
1	7-4374	Blade	1
2	283-38	Clevis Pin	2
3	20-5090	Swivel Bracket	1
4	32152-3	Locknut	5
5	3290-322	Hairpin Cotter	5
6	20-5170	Mounting Plate	1
7	323-6	Capscrew	4
8	32152-2	Locknut	4
9	22-4920	Mounting Plate (Used with 826 & 1132 Units only)	1
10	39-7850	Mounting Rail (Used with 421 Units only)	2

Ref. No.	Part No.	Description	No. Used
11	32121-45	Roll Pin	3
12	20-5210	Pivot Pin (Incl. Ref. #11)	3
13	20-5140	Tongue Blade	1
14	3256-5	Flat Washer	4
15	325-11	Capscrew	1
16	20-5130	Blade Adjustment	1
17	322-6	Capscrew	4
18	7-1023	Skid	2
19	32152-1	Locknut	4
20	325-5	Capscrew	4
*	20-9950	Air Cleaner Kit – (Tecumseh)	1

*Not Illustrated

IDENTIFICATION AND ORDERING

MODEL AND SERIAL NUMBER

The Snowthrower has two identification numbers: a model number and a serial number. The two numbers are stamped on a decal which is located on back of engine mounting plate adjacent to left rear wheel. In any correspondence concerning the Snowthrower, supply model and serial numbers to assure that correct information and replacement parts are obtained.

To order replacement parts from an Authorized TORO Service Dealer, supply the following information:

1. Model and serial numbers of the Snowthrower.
2. Part number, description, and quantity of part(s) desired.

Note: Do not order by reference number if a parts catalog is being used; use the PART NUMBER.

The Toro Promise

A ONE YEAR LIMITED WARRANTY

The Toro Company promises to repair any TORO Product if defective in materials or workmanship. The following time periods from the date of purchase apply:

Residential Product . . . . . 1 Year
Residential Products Used Commercially . . . 45 Days

The costs of parts and labor are included, but the customer pays the transportation costs. Just return any residential product to an Authorized TORO Service Dealer or TORO Distributor.

Should you feel your TORO Product is defective and wish to rely on The Toro Promise, the following procedure is recommended:

1. Contact any Authorized TORO Service Dealer, TORO Master Service Dealer, or TORO Distributor (the Yellow Pages of your telephone directory is a good reference source).
2. He will either instruct you to return the product to him or recommend another Authorized TORO Service outlet which might be more convenient.
3. Bring the product along with your original sales slip, or other evidence of purchase date, to the service dealer.
4. The servicing dealer will inspect the unit, advise you whether the product is defective and, if so, make all repairs necessary to correct the defect without extra charge to you.

If for any reason you are dissatisfied with the dealer's analysis of the defect or the service performed, you may contact us.

Write:

TORO Consumer Service Department
8111 Lyndale Avenue South
Minneapolis, Minnesota 55420

The above remedy of product defects through repair by an Authorized TORO Service Dealer is the purchaser's sole remedy for any defect.

THERE IS NO OTHER EXPRESS WARRANTY. ALL IMPLIED WARRANTIES OF MERCHANTABILITY AND FITNESS FOR USE ARE LIMITED TO THE DURATION OF THE EXPRESS WARRANTY.

Some states do not allow limitations on how long an implied warranty lasts, so the above limitation may not apply to you.

This warranty applies only to parts or components which are defective and does not cover repairs necessary due to normal wear, misuse, accidents, or lack of proper maintenance. Regular, routine maintenance of the unit to keep it in proper operating condition is the responsibility of the owner.

All warranty repairs reimbursable under The Toro Promise must be performed by an Authorized TORO Service Dealer using Toro approved replacement parts.

Repairs or attemped repairs by anyone other than an Authorized TORO Service Account are not reimbursable under The Toro Promise. In addition, these unauthorized repair attempts may result in additional malfunctions, the correction of which is not covered by warranty.

THE TORO COMPANY IS NOT LIABLE FOR INDIRECT, INCIDENTAL OR CONSEQUENTIAL DAMAGES IN CONNECTION WITH THE USE OF THE PRODUCT INCLUDING ANY COST OR EXPENSE OF PROVIDING SUBSTITUTE EQUIPMENT OR SERVICE DURING PERIODS OF MALFUNCTION OR NON-USE.

Some states do not allow the exclusion or limitation of incidental or consequential damages, so the above limitation or exclusion may not apply to you.

This warranty gives you specific legal rights, and you may also have other rights which vary from state to state.

COUNTRIES OTHER THAN THE UNITED STATES OR CANADA

Customers who have purchased TORO products exported from the United States or Canada should contact their TORO Distributor (Dealer) to obtain guarantee policies for your country, province or state. If for any reason you are dissatisfied with your Distributor's service or have difficulty obtaining guarantee information, contact the TORO importer. If all other remedies fail, you may contact us at The Toro Company.

International Group
Service Department
One Corporate Center
7401 Metro Boulevard
Minneapolis, Minnesota 55435 U.S.A.

Compliance with Radio Interference Regulations Certified.
Certifie Conforme au Reglement sur le Brouillage Radioelectrique.

Litho in U.S.A.