FORM NO. 3311-645

TORO®

MODEL NO. 38150-1000001 & UP
MODEL NO. 38090-1000001 & UP

PARTS CATALOG

826 & 1132 SNOWTHROWERS

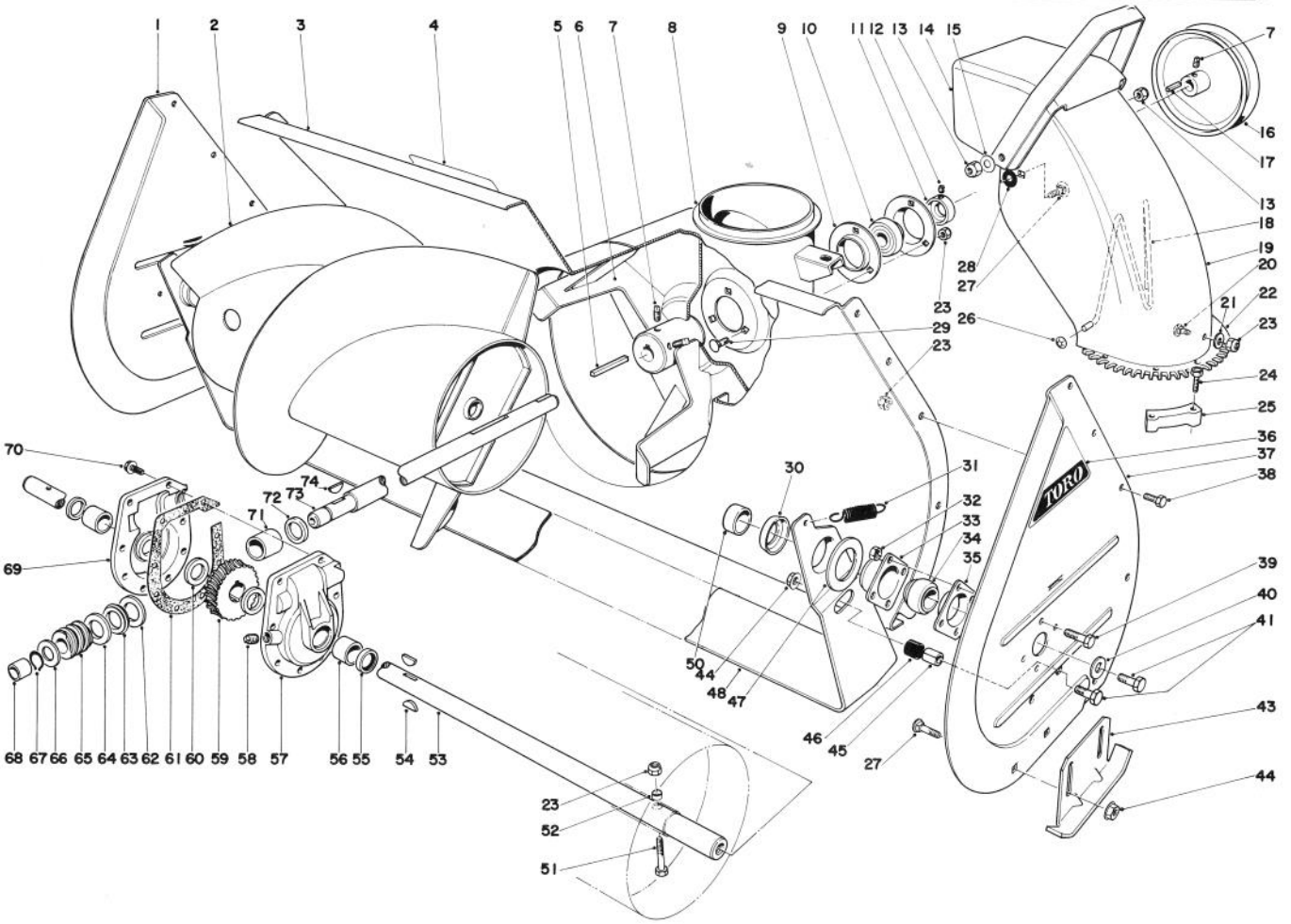

AUGER ASSEMBLY

Ref. No.	Part No.	Description	No. Used
1	8-8450	Sideplate Auger R.H.	1
2	26-6180	Auger R.H. (Model 38090)	1
*	26-6160	Auger R.H. (Model 38150)	1
*	26-6190	Auger L.H. (Model 38090)	1
*	26-6170	Auger L.H. (Model 38150)	1
3	25-5110	Auger Housing (Model 38090)	1
*	25-5100	Auger Housing (Model 38150)	1
4	29-6350	Decal - Auger Warning	1
5	6-8590	Key - Impeller	1
6	19-8890	Impeller	1
7	3242-4	Set Screw	4
8	25-5170	Chute Ring	1
9	251-229	Bearing Flange	2
10	251-224	Bearing - Impeller	1
11	251-231	Locking Collar	1

Ref. No.	Part No.	Description	No. Used
12	3245-32	Set Screw	2
13	32152-2	Locknut	2
14	11-7120	Deflector	1
15	3290-340	Washer Belleville	2
16	5-7400	Pulley Impeller	1
17	3-6857	Key	1
18	12-2040	Chute Wire	1
19	25-5440	Upper Chute	1
20	3230-18	Carriage Bolt	3
21	3256-23	Washer	3
22	25-5290	Swivel Plate	1
23	3296-29	Locknut	18
24	27-0220	Screw Special	6
25	25-5450	Swivel Block	3
26	3290-326	Pushnuts	2

*Not Illustrated

COPYRIGHT © ALL RIGHTS RESERVED
The Toro Company — 1980
MINNEAPOLIS, MN 55420 — U.S.A.

PRICE $1.00

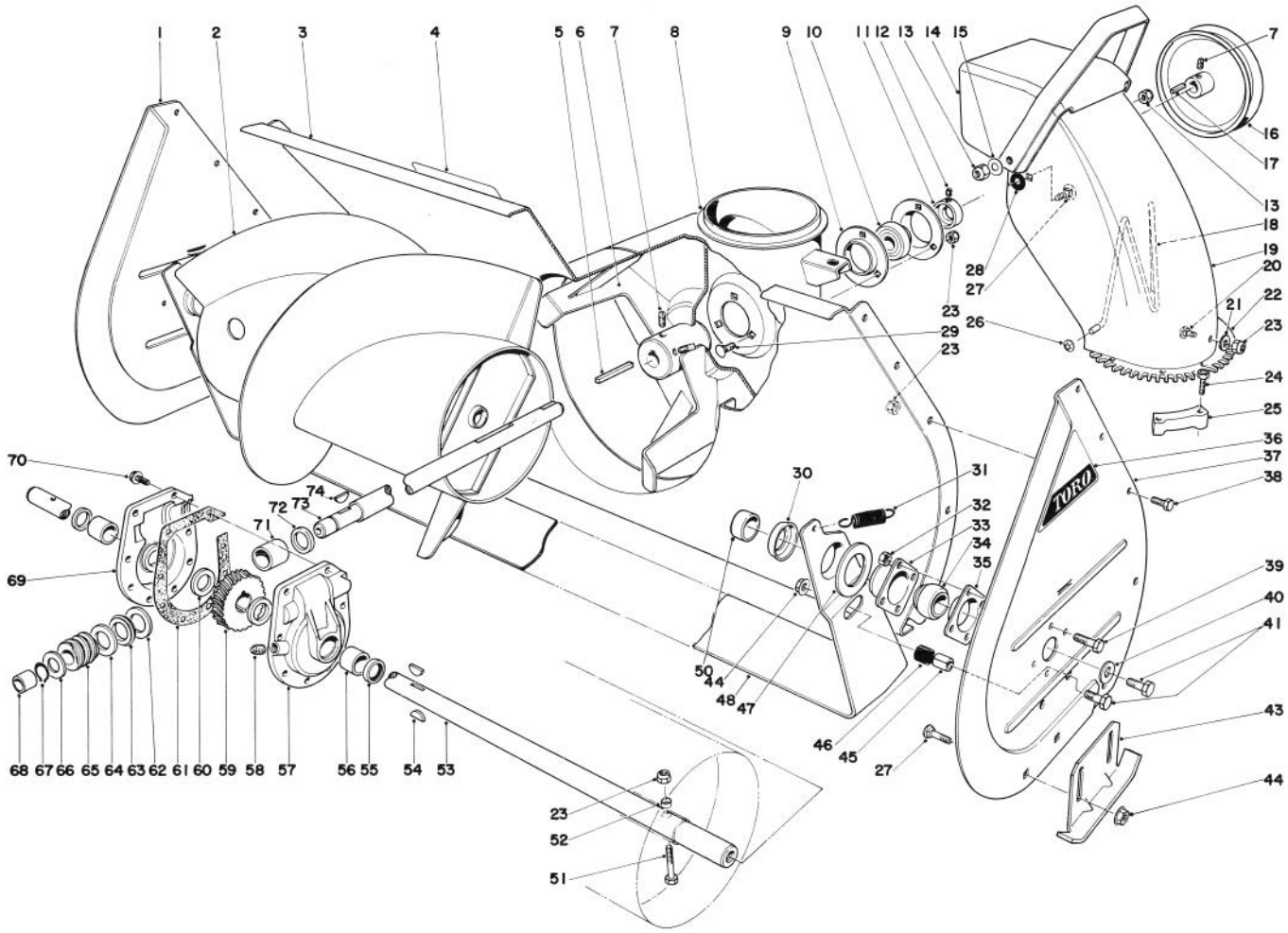

AUGER ASSEMBLY (Continued)

Ref. No.	Part No.	Description	No. Used
27	3231-27	Carriage Bolt	6
28	20-4320	Washer Rubber	2
29	3230-1	Carriage Bolt	3
30	26-6400	Positioner - Scraper Blade	2
31	5-7290	Spring Scraper	2
32	32152-4	Locknut	8
33	20-0990	Flange Bearing Front	2
34	20-0980	Bearing	2
35	20-1000	Flange Bearing Rear	2
36	17-6500	Decal—Auger Side Plate	2
37	8-8440	Sideplate Auger L.H.	1
38	322-2	Capscrew	10
39	321-3	Capscrew	8
40	3-0750	Flat Washer	2
41	323-6	Capscrew	4
43	20-2840	Auger Skid	2
44	32128-21	Locknut	6
45	25-5140	Standoff - Scraper Stop	2
46	25-5150	Bumper - Scraper Stop	2
47	20-0300	Spacer - Scraper Blade	2
48	19-9160	Scraper Blade (Model 38090)	1
*	19-9140	Scraper Blade (Model 38150)	1
50	26-6390	Spacer Auger	2
51	17-7030	Bolt Auger	2
52	25-5090	Spacer Auger Hub	2
53	11-7010	Shaft Auger (Model 38090)	1
*	11-7000	Shaft Auger (Model 38150)	1
54	3257-33	Key Woodruff	2

Ref. No.	Part No.	Description	No. Used
55	7-0045	Oil Seal	2
56	256-237	Bushing	2
57	37-8860	Gear Case L.H. (Incl. Ref. #55-56)	1
58	281-1	Pipe Plug	1
59	5-7180	Gear Worm	1
60	252-71	Thrust Bearing	2
61	40-8330	Gasket	1
62	252-78	Thrust Washer	1
63	252-76	Thrust Bearing	1
64	252-77	Thrust Washer	1
65	5-7170	Worm	1
66	3-8664	Thrust Washer	1
67	32120-72	Retaining Ring	1
68	256-32	Bushing	1
69	37-8850	Gear Case R.H. (Incl. Ref. #55-56)	1
70	32144-41	Thread Forming Screw	8
71	20-3210	Bushing	1
72	237-87	Seal	1
73	19-8540	Shaft Impeller	1
74	3257-23	Key Woodruff	1
*	25-5280	Gear Case Assembly Complete (Model 38090)	1
*	19-6990	Gear Case Assembly Complete (Model 38150)	1
†	20-0650	Drift Storage Bar (Model 38090)	1
†	20-0640	Drift Storage Bar (Model 38150)	1

*Not Illustrated
†Optional Equipment

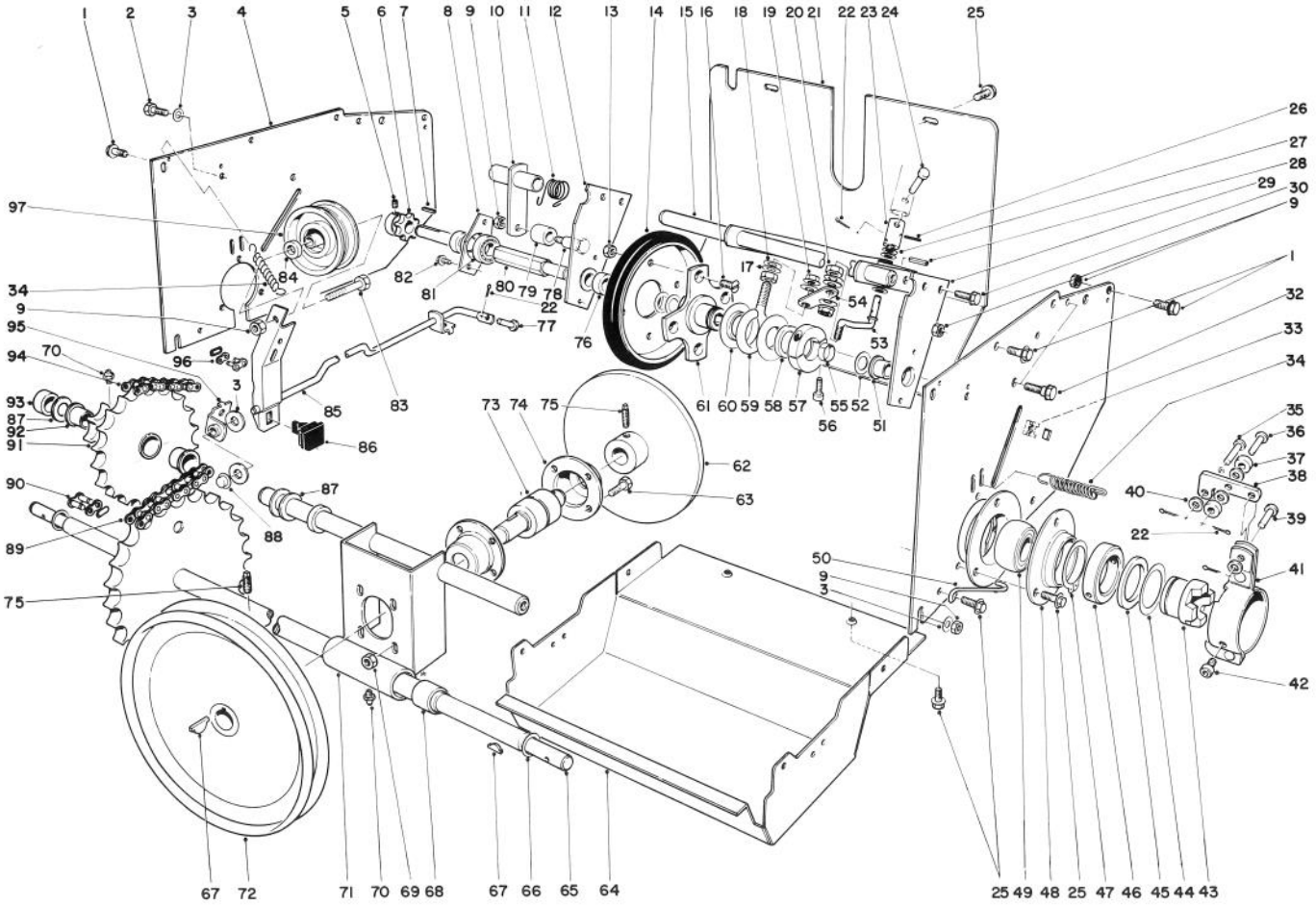

TRACTION ASSEMBLY

Ref. No.	Part No.	Description	No. Used
1	323-6	Capscrew	7
2	32144-15	Hex Thread Forming Screw	2
3	3256-25	Washer	5
4	22-7990	Side Plate Drive	2
5	3245-32	Set Screw	2
6	5-9820	Sprocket	1
7	3-6168	Square Key	1
8	22-8950	Bearing Cup	1
9	32146-2	Hex Locknut	11
10	26-6470	Chain Tensioning Arm	1
11	26-8950	Spring – Chain Tensioner	1
12	26-6070	Mount – Hex Shaft R.H.	1
13	32146-5	Locknut	4
14	40-8170	Disc Assembly	1
15	11-8010	Bracket – Dead Shaft	1
16	32108-94	Screw – Flat Head	4
17	3256-45	Washer	2
18	3290-301	Spring Washer	4
19	32128-12	Flange Nut	2
20	32146-6	Locknut	2
21	8-7950	Rear Shield	1
22	3272-5	Cotter Pin	8
23	11-8070	Tube – "U" Joint	1
24	283-31	Clevis Pin	1
25	32144-10	Screw – Thread Forming	14
26	32121-50	Roll Pin	2

Ref. No.	Part No.	Description	No. Used
27	252-89	Thrust Washer	3
28	32121-11	Roll Pin	2
29	26-6330	Hex Shaft Mounting (Incl. Ref. #51)	1
30	32144-11	Screw – Thread Forming	4
32	11-8140	Shoulder Screw	4
33	3290-398	Retained Nut	2
34	10-3890	Spring – Extension	3
35	283-29	Clevis Pin	2
36	283-17	Clevis Pin	2
37	10-3910	Roller – Clutch	4
38	20-1050	Arm – Clutch Cam	2
39	283-16	Clevis Pin	2
40	3256-14	Washer	10
41	20-2290	Clutch Mounting Bracket	2
42	3274-42	Hex Socket Capscrew	4
43	26-5990	Wheel Clutch	2
44	10-3980	Thrust Washer	2
45	256-214	Thrust Bearing	2
46	10-3860	Collar – Clutch Mounting	2
47	32151-35	Ring – Retainer	2
48	20-1020	Bearing Flange	4
49	20-1010	Bearing Axle	2
50	41-8570	Retainer – Clutch	2
51	256-219	Bushing	1
52	5-7570	Washer – Friction Wheel Shaft	3

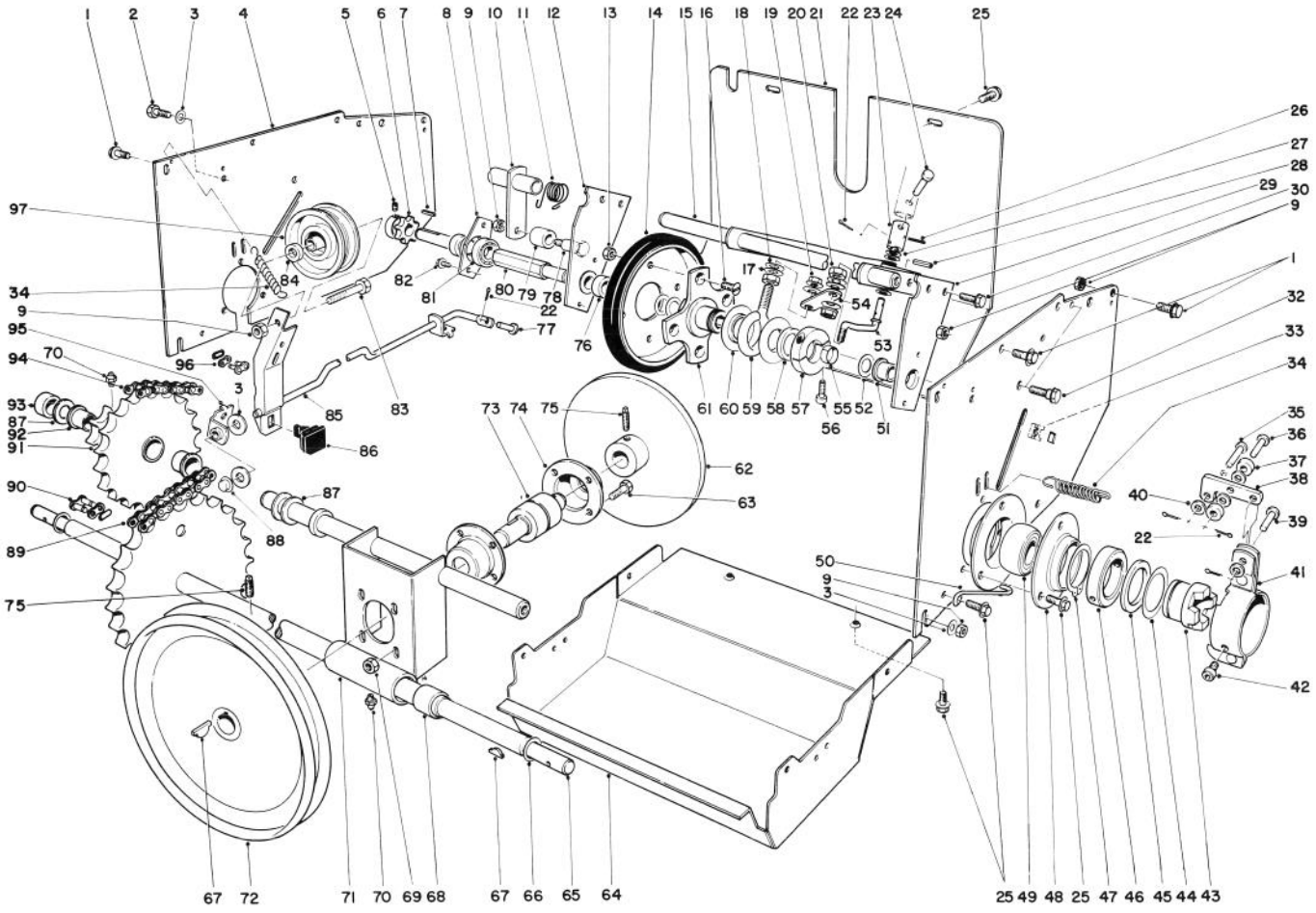

TRACTION ASSEMBLY(Continued)

Ref. No.	Part No.	Description	No. Used
53	11-8090	Rod – Connecting	1
54	11-8060	Pivot – Shift Rod	1
55	11-3180	Spacer – Split	1
56	3274-26	Hex Socket Capscrew	2
57	20-4610	Collar	1
58	252-71	Thrust Bearing	1
59	11-8050	Slider Ring Collar	1
60	11-8080	Ring – Slider	2
61	20-3310	Hub – Traction Disc	1
62	23-4970	Friction Plate	1
63	322-3	Capscrew	4
64	11-7140	Shield – Lower	1
65	26-5950	Axle Shaft	1
66	3-0737	Thrust Washer	2
67	3257-23	Key – Hi Pro	6
68	256-232	Bushing	2
69	32149-1	Locknut	4
70	302-5	Grease Fitting	2
71	25-5190	Bulkhead (Incl. Ref. #68)	1
72	5-7410	Pulley – Drive	1
73	23-4950	Friction Plate Shaft	1
74	10-0070	Bearing Housing	2
75	3242-4	Set Screw	4
76	22-9190	Spacer	2
77	283-6	Clevis Pin	1

Ref. No.	Part No.	Description	No. Used
78	7-0846	Shoulder Bolt	1
79	26-8940	Roller – Chain Tensioner	1
80	11-8940	Shaft – Friction Wheel	1
81	251-260	Bearing	1
82	12-3270	Hex Washer Head Thread Forming Screw	2
83	323-8	Capscrew	1
84	20-0010	Spacer	1
85	8-9139	Auger Brake Assembly (Incl. Ref. #86)	1
86	40-8140	Brake Pad – Molded	1
87	3-8664	Thrust Washer	3
88	3290-383	Pushnut	1
89	23-7260	Lower Chain	1
90	2710-11	Connecting Link	1
91	23-7230	Sprocket (Incl. Ref. #70 & 92)	1
92	256-215	Bushing	2
93	23-7250	Spacer	1
94	5-9430	Upper Chain	1
95	20-2940	Bracket – Clutch Rod	1
96	2710-6	Connecting Link	1
97	3-4244	Pulley – Idler	1
*	8-8419	Loose Parts (Model 38150)	1
*	8-8449	Loose Parts (Model 38090)	1

*Not Illustrated

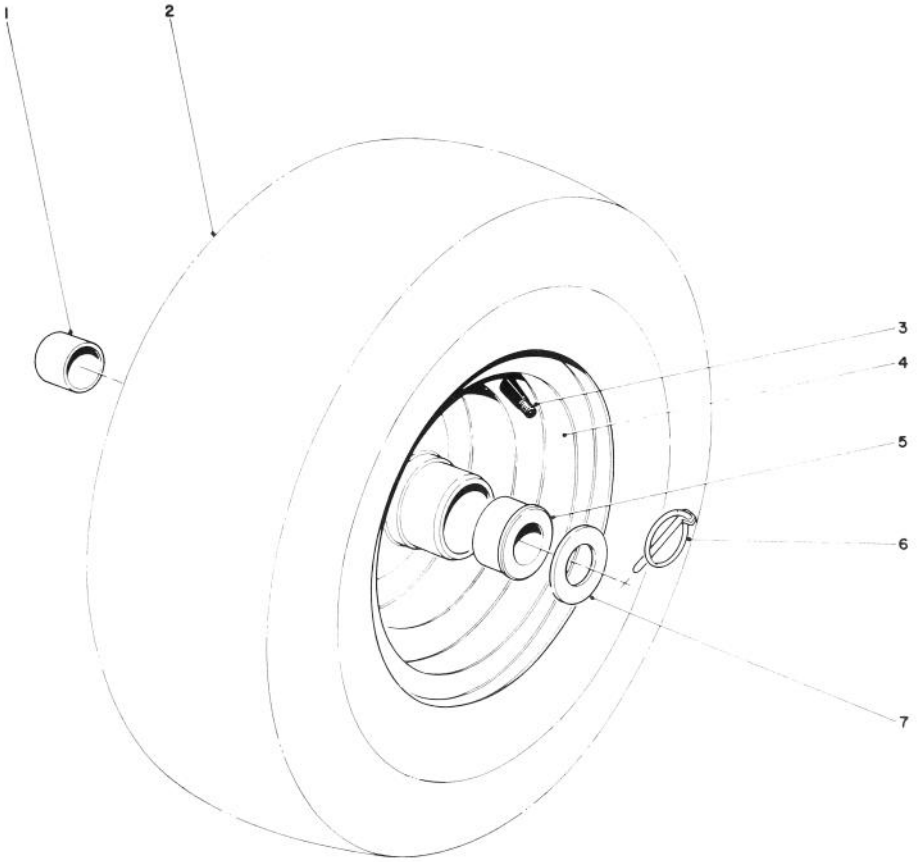

WHEEL ASSEMBLY

Ref. No.	Part No.	Description	No. Used
1	256-205	Bushing	2
2	231-92	Tire	2
3	232-27	Valve Stem	2
4	26-9880	Wheel & Hub Assembly (Incl. Ref. # 1 & 5)	2

Ref. No.	Part No.	Description	No. Used
5	256-117	Wheel Bushing	2
6	3290-243	Klip Pin	2
7	3-8664	Thrust Washer	2
†	23-2340	Tire Chain Optional (Set of 2)	1

†Optional Equipment

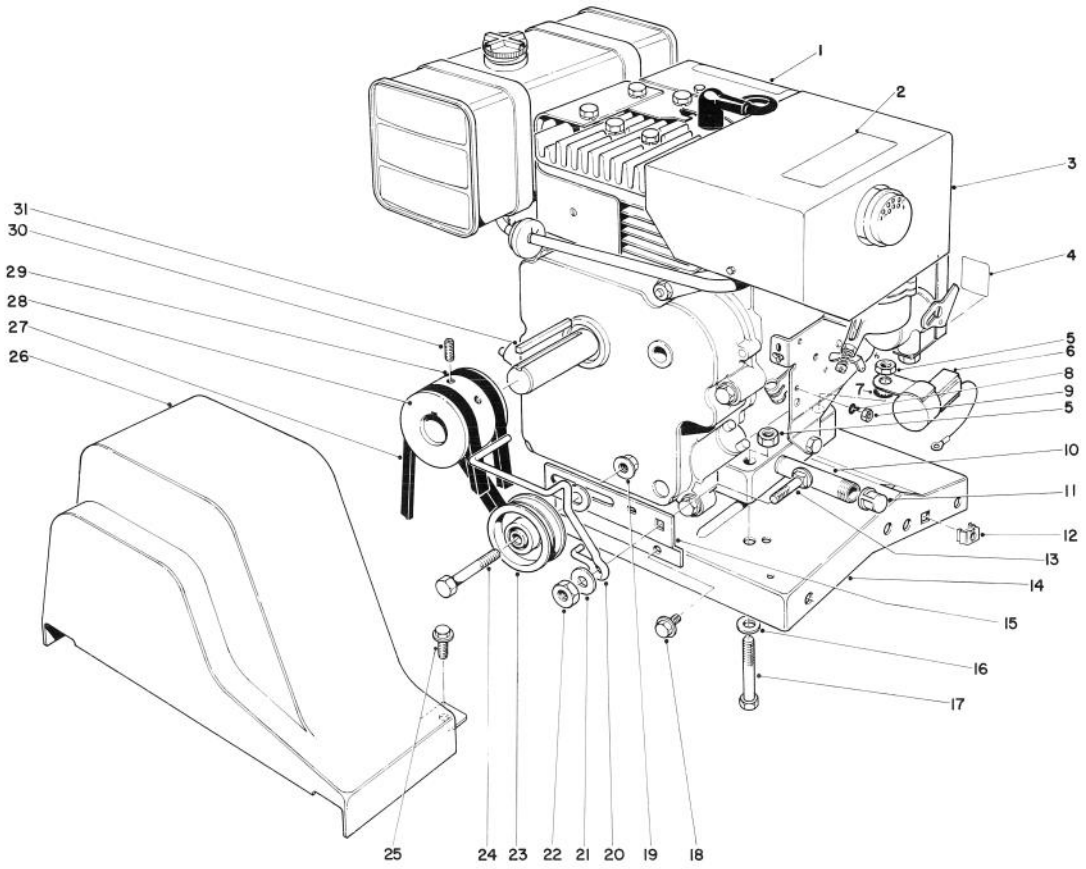

ENGINE ASSEMBLY (Model 38150)

Ref. No.	Part No.	Description	No. Used
1	41-8540	Decal – Hazards Caution	1
2	29-6390	Decal – Hot Surface Warning	1
3	221-600	Engine	1
4	29-6400	Decal – Choke	1
5	3296-29	Locknut	4
6	41-8610	Interlock Module	1
7	3254-2	Int. Tooth Lockwasher	1
8	3254-10	Int. Tooth Lockwasher	1
9	3296-1	Locknut	1
10	289-20	Pipe Nipple	1
11	288-4	Pipe Cap	1
12	3290-398	Retained Nut	2
13	3231-27	Carriage Bolt	1
14	22-9030	Engine Base	1
15	41-8580	Bracket – Belt Idler	1
16	3256-23	Washer	4

Ref. No.	Part No.	Description	No. Used
17	322-9	Capscrew	4
18	32144-15	Hex Forming Screw	2
19	3290-357	Locknut	1
20	41-8590	Belt Guide	1
21	3256-25	Washer	2
22	32146-2	Locknut	1
23	244-63	Idler Pulley	1
24	323-8	Capscrew	1
25	32144-10	Self Tapping Screw	2
26	17-6550	Belt Guard	1
27	26-9670	V-Belt, Auger	1
28	21-4100	Engine Pulley	1
29	17-6540	V-Belt, Traction	1
30	3246-14	Set Screw	2
31	5-0930	Key	1
*	25-9150	Decal – Replacement Serial Plate	1

*Not Illustrated

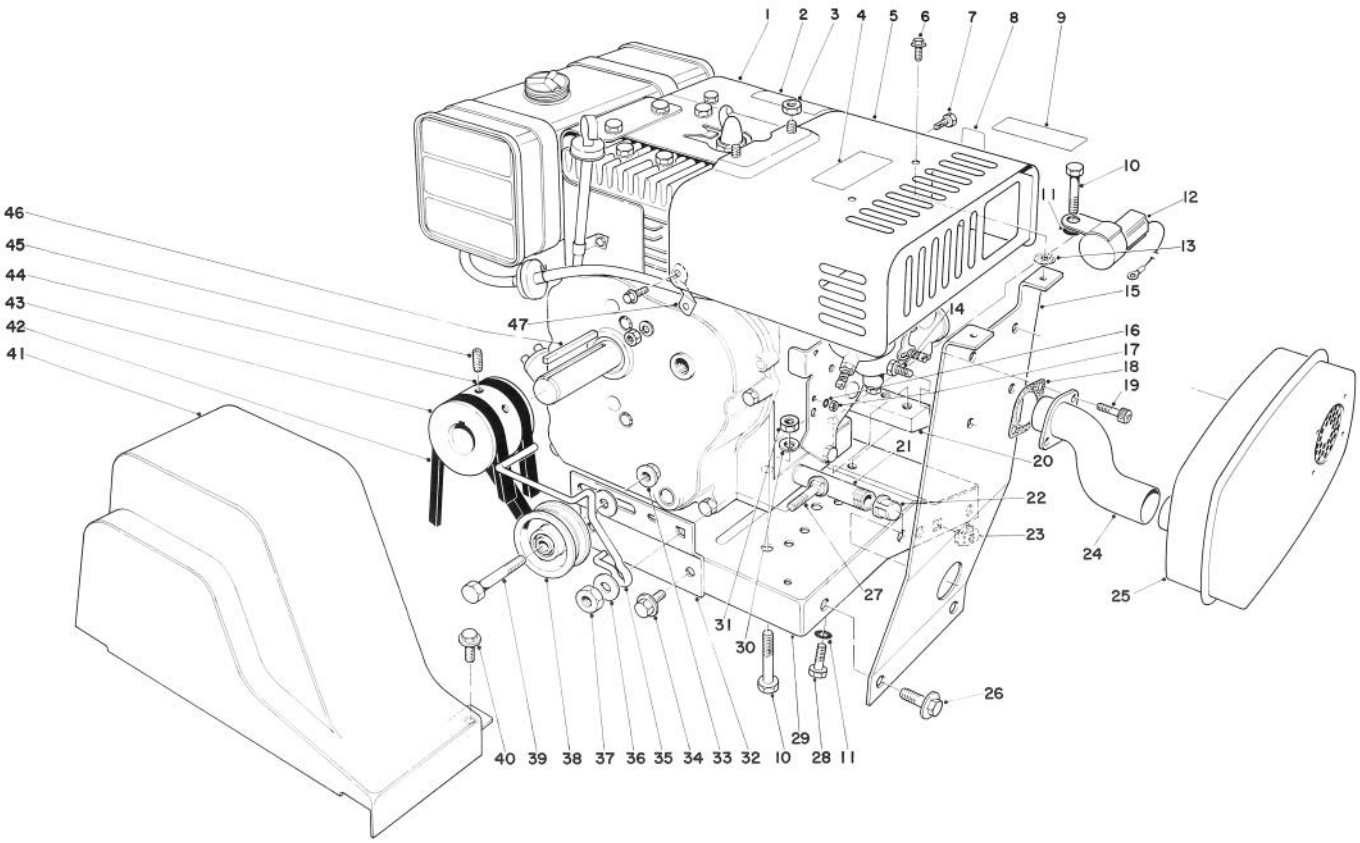

ENGINE ASSEMBLY (Model 38090)

Ref. No.	Part No.	Description	No. Used
1	221-641	Engine	1
2	41-8540	Decal — Hazards Caution	1
3	32153-3	Nut	3
4	29-6390	Decal — Hot Surface Warning	1
5	39-1780	Heater Box	1
6	12-3270	Screw — Special	3
7	32144-12	Screw	1
8	29-6400	Decal — Choke	1
9	42-1740	Decal — Syncro Balance	1
10	322-9	Capscrew	4
11	3254-2	Int. Tooth Lockwasher	5
12	41-8610	Interlock Module	1
13	25-1600	Washer	2
14	32140-70	Hex Head Screw	4
15	39-1740	Muffler Mounting Bracket	1
16	3254-10	Int. Tooth Lockwasher	1
17	3296-1	Locknut	1
18	39-1810	Gasket	1
19	3274-12	Socket Screw	2
20	22-8960	Engine Mounting Block	1
21	289-20	Pipe Nipple	1
22	288-4	Pipe Cap	1
23	3290-398	Retained Nut	2
24	39-1800	Exhaust Pipe	1

Ref. No.	Part No.	Description	No. Used
25	27-6610	Muffler	1
26	323-6	Hex Flange Screw	2
27	3231-27	Carriage Bolt	1
28	322-3	Capscrew	2
29	22-9030	Engine Base	1
30	3256-23	Washer	2
31	3296-29	Locknut	2
32	41-8580	Bracket — Belt Idler	1
33	3290-357	Locknut	1
34	32144-15	Hex Forming Screw	2
35	41-8590	Belt Guide	1
36	3256-25	Washer	2
37	32146-2	Locknut	1
38	244-63	Idler Pulley	1
39	323-8	Capscrew	1
40	32144-10	Screw — Thread Forming	2
41	17-6550	Belt Guard	1
42	26-9670	V-Belt, Auger	1
43	21-4100	Engine Pulley	1
44	17-6540	V-Belt, Traction	1
45	3246-14	Set Screw	2
46	5-0930	Key	1
47	39-1790	Brace Heater Box	1
*	25-9150	Decal — Replacement Serial Plate	1

*Not Illustrated

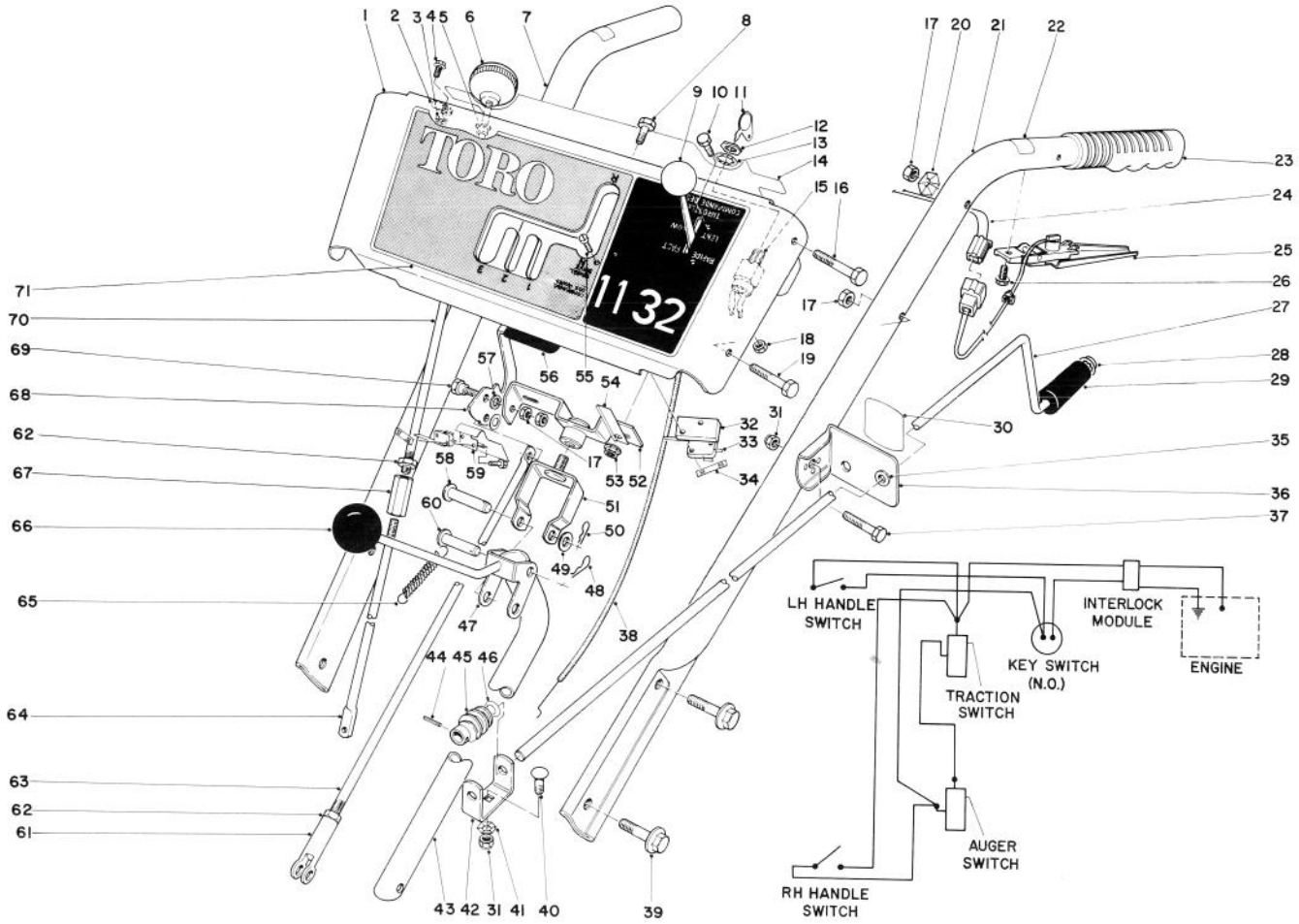

HANDLE ASSEMBLY

Ref. No.	Part No.	Description	No. Used
1	8-8909	Escutcheon Plate (Incl. Ref. #14 & 71)(Model 38090)	1
*	8-1559	Escutcheon Plate (Incl. Ref. #14 & 71)(Model 38150)	1
2	2412-52	Clamp	2
3	32149-7	Nut	2
4	32122-32	Screw	2
5	256-240	Nyliner	2
6	233-10	Knob	2
7	40-8460	Handle – Right	1
8	321-3	Capscrew	2
9	233-36	Knob	1
10	32140-99	Hex Head Screw	2
11	33-2010	Keys	2
12	218-461	Hex Nut	1
13	3254-5	Lockwasher	1
14	29-6330	Decal – Escutcheon Back	1
15	40-8240	Key Switch	1
16	321-11	Capscrew	2
17	32152-4	Locknut	8
18	32146-18	Locknut	2
19	321-9	Capscrew	2
20	3290-257	Washer Pyramidal	2

*Not Illustrated

Ref. No.	Part No.	Description	No. Used
21	40-8450	Handle – Left	1
22	29-6360	Decal – Safety Interlock	2
23	6-0450	Handle Grip	2
24	40-8640	Wire Harness	1
25	40-9690	Interlock Handle & Switch	2
26	12-3270	Hex Washer Head Thread Forming Screw	2
27	41-8640	Rod – Chute Control	1
28	3290-320	Push-on Speed Nut	1
29	40-8230	Chute Control Grip	1
30	29-6370	Decal – Chute Direction	1
31	3296-29	Locknut	2
32	22-7950	Pad – Switch Mounting	1
33	40-8200	Micro Switch	2
34	3290-354	Speed Nut	2
35	256-249	Nyliner	1
36	6-3069	Bracket – Chute Control Mtg. (Incl. Ref. #30 & 35)	1
37	322-9	Capscrew	1
38	8-7790	Throttle Control	1
39	3234-1	Flange Screw	4
40	3230-2	Carriage Bolt	1
41	3290-238	Pyramidal Washer	1

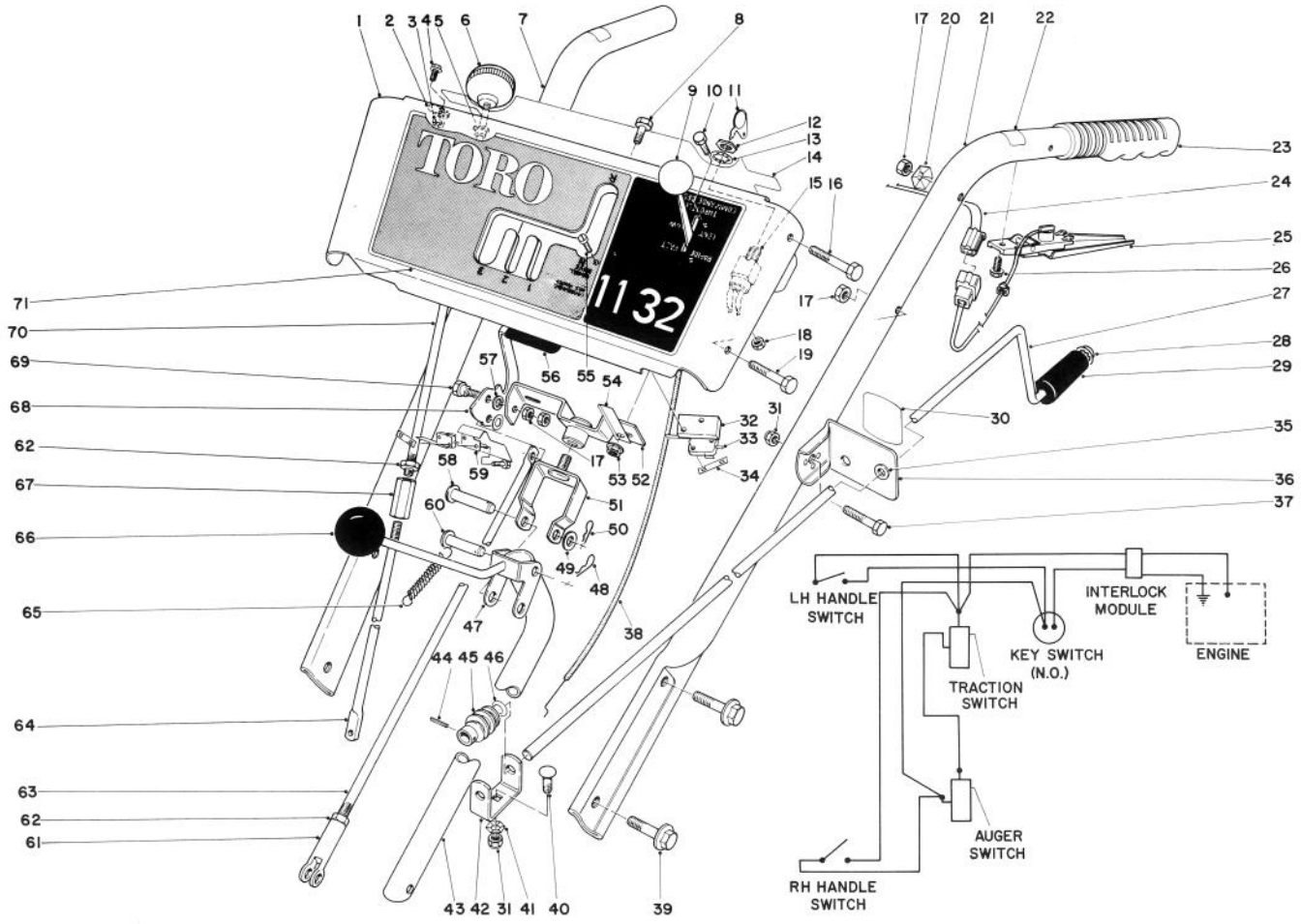

HANDLE ASSEMBLY (Continued)

Ref. No.	Part No.	Description	No. Used
42	11-7110	Bracket – Worm	1
43	29-6450	Rod – Traction Shift	1
44	32121-50	Roll Pin	1
45	8-8600	Worm Gear – Chute	1
46	3290-212	Spring Washer	1
47	26-9370	Shift Rod	1
48	3290-307	Hair Pin Cotter	1
49	3256-6	Washer	1
50	3290-322	Hair Pin Cotter	1
51	29-6490	Pivot Bracket	1
52	8-7930	Swivel Block	1
53	32128-10	Flange Locknut	2
54	26-9410	Retainer – Wire	1
55	3290-313	Machine Screw	4
56	11-8970	Grip – Auger Handle	1
57	3256-23	Washer	2
58	283-5	Clevis Pin	1

Ref. No.	Part No.	Description	No. Used
59	22-9300	Bracket – Switch	1
60	283-15	Clevis Pin	1
61	39-4640	Clevis	1
62	3220-3	Jam Nut	3
63	29-6460	Drag Link	1
64	22-7970	Rod – Wheel Clutch, Lower	2
65	8-9900	Spring – Control Rod	1
66	233-21	Knob	1
67	22-7940	Coupling – Wheel Clutch Rod	2
68	17-6620	Handle – Auger Clutch	1
69	11-9030	Shoulder Bolt	2
70	29-6470	Rod – Wheel Clutch	2
71	37-0290	Decal – Escutcheon (Model 38090)	1
*	29-6310	Decal – Escutcheon (Model 38150)	1
*	3290-378	Cable Tie	2

*Not Illustrated

ENGINE BRIGGS & STRATTON MODEL NO. 190402
TYPE 0989-01
(8 H.P. SNOWTHROWER MODEL 38150)

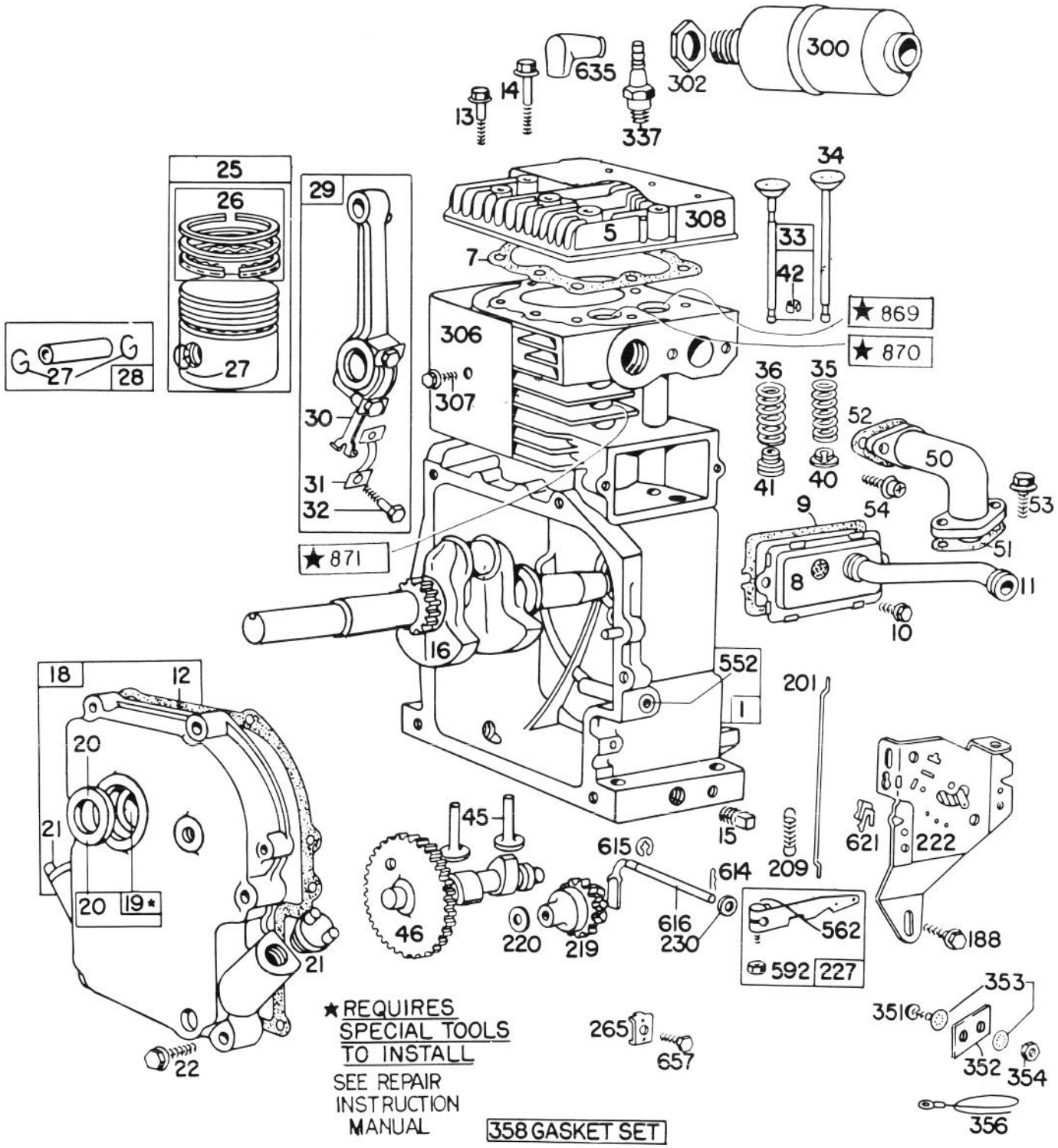

ENGINE BRIGGS & STRATTON MODEL NO. 190402
TYPE 0989-01
(8 H.P. SNOWTHROWER MODEL 38150)

Ref. No.	Part No.	Description	No. Used
1	392001	Cylinder Assembly	1
5	211778	Head – Cylinder	1
7	*270430	Gasket – Cylinder Hd.	1
8	390321	Breather Assembly	1
9	*27803	Gasket – Valve Cover	1
10	93536	Screw	1
11	67068	Tube – Breather	1
12	*27750	Gasket – Crankcase Cover – 1/64" thick	1
	*27876	Gasket – Crankcase Cover – .005" thick	1
	*27877	Gasket – Crankcase Cover – .009" thick	1
13	93113	Screw – Cylinder Head (2-5/16" long)	1
14	93211	Screw – Cylinder Head 2-21/32" long)	1
15	91084	Plug – Oil Drain	1
16	261077	Crankshaft	1
18	299167	Cover Assembly – Crankcase	1
19	295964	Bushing – Crankcase Cover Note: Requires special tools for installation.	1
20	298423	Seal – Oil	1
21	66768	Plug – Oil Filler	1
22	93585	Screw – Crankcase Cover Mounting	1
25	391673	Piston Assembly – Standard	1
	391674	Piston Assembly – .010" O.S.	1
	391675	Piston Assembly – .020" O.S.	1
	391676	Piston Assembly – .030" O.S.	1
		PISTON RING SETS: Note: For Chrome Ring Set – Standard Size – order No. 299743	
26	391669	Ring Set – Piston – Standard	1
	391670	Ring Set – Piston – .010" O.S.	1
	391671	Ring Set – Piston – .020" O.S.	1
	391672	Ring Set – Piston – .030" O.S.	1
27	68546	Lock – Piston Pin	1
28	295840	Pin Assembly – Piston – Standard	1
	295841	Pin Assembly – Piston – .005" O.S.	1
29	390401	Rod Assembly – Connecting Note: For Connecting Rod with .020" undersize Crankpin Bore – Order No. 390773	1
30	222113	Dipper – Connecting Rod	1
31	222114	Lock – Connecting Rod Screw	1
32	92659	Screw – Connecting Rod	1
33	390419	Valve – Exhaust	1
34	261055	Valve – Intake	1
35	65906	Spring – Intake Valve	1
36	26828	Spring – Exhaust Valve	1
40	221596	Retainer – Intake Valve	1
41	292260	Rotocoil – Exhaust Valve	1

Ref. No.	Part No.	Description	No. Used
42	93630	Retainer – Exh. Valve Rotocoil	2
45	260933	Tappet – Valve	1
46	211689	Gear – Cam	1
50	211812	Elbow – Intake	1
51	*270684	Gasket – Carb. Mtg.	1
52	*27828	Gasket – Intake Elbow Mounting	1
53	93128	Screw – Carburetor Mounting	1
54	93208	Screw – Intake Elbow Mounting	1
188	93535	Screw	1
201	260872	Link – Governor	1
209	261126	Spring – Governor	1
219	391737	Gear – Governor	1
220	221551	Washer – Thrust	1
222	390670	Plate – Gov. Control	1
227	391965	Lever Assembly – Governor	1
230	222450	Washer – Governor Crank	1
265	221535	Clamp – Casing Note: 220680 Washer – Flat used between Clamp and Insulator.	1
300	393010	Muffler – Exhaust	1
302	91242	Locknut – Muffler and Elbow	1
306	221898	Shield – Cylinder	1
307	93163	Screw – Cylinder Shield Mtg.	1
308	221901	Cover – Cylinder Head	1
337	293918	Plug – Spark (1-1/2" high – 37-42 M.M.) (Resistor Type) Note: Spark Plugs use Ignition Cable Terminal No. 221798	1
351	90200	Screw – Terminal	1
352	66895	Insulator	1
353	92791	Washer – Lock	3
354	90576	Nut – Hex.	2
356	299500	Wire – Ground Note: 391255 Wire – Jumper used in addition to No. 299500 Ground Wire	1
358	299577	Gasket Set	1
552	231056	Bushing – Governor Crank	1
562	92613	Bolt – Governor Lever	1
592	231082	Nut – Hex.	1
614	93306	Cotter – Hair Pin	1
615	93307	Retainer – E-Ring	1
616	231057	Crank – Governor	1
621	297472	Switch – Stop	1
635	66538	Elbow – Spark Plug	1
657	93496	Screw	1
869	211661	Insert – Intake Valve Seat (Standard)	1
870	211661	Insert – Exhaust Valve Seat (Standard)	1
871	230655	Guide – Valve	1

*Included in Gasket Set – Part No. 299577

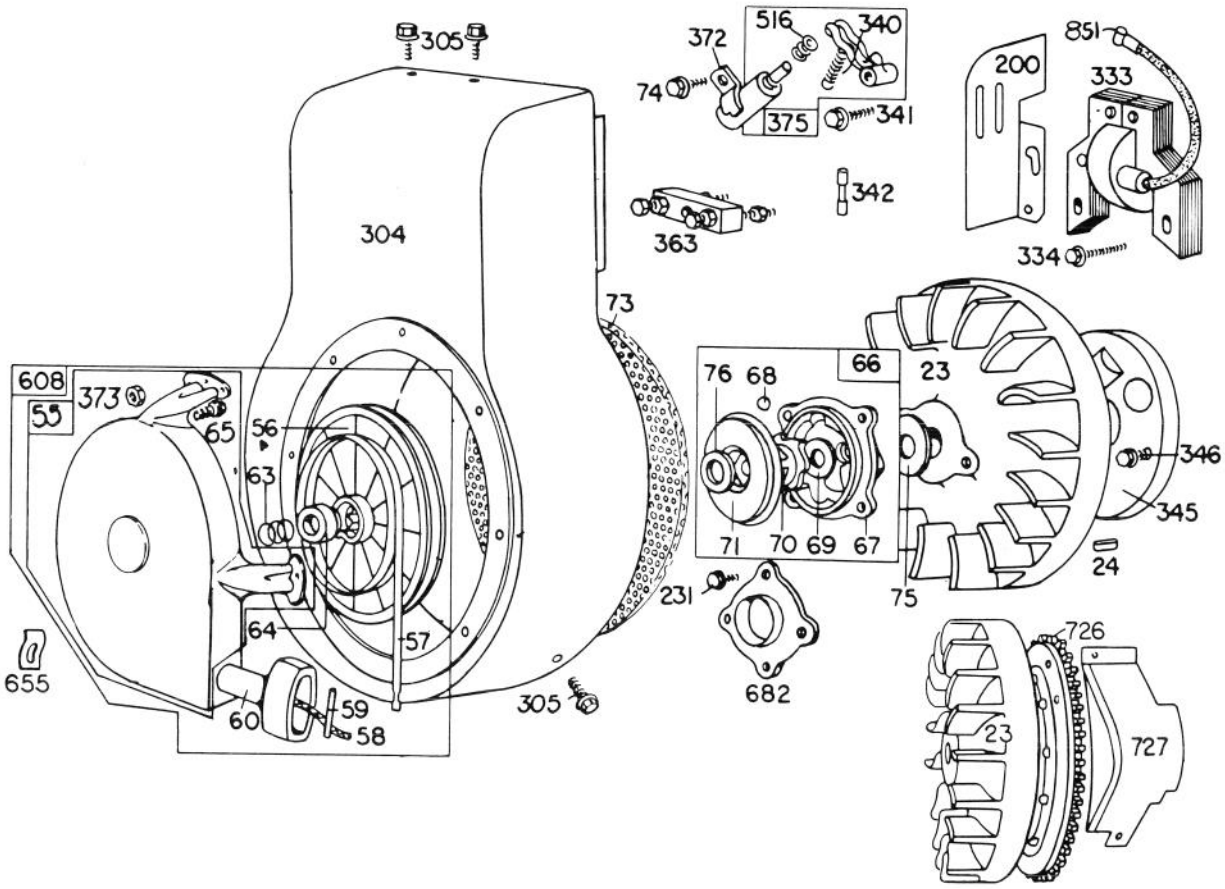

ENGINE BRIGGS & STRATTON MODEL NO. 190402 TYPE 0989-01

(8 H.P. SNOWTHROWER MODEL 38150)

Ref. No.	Part No.	Description	No. Used
23	392034	Flywheel and Ring Gear Assy. — Magneto. For use only on electric starter engines WITHOUT ALTERNATOR (Includes aluminum ring gear). For use only with starter motors with Plastic Drive Gear.	1
24	61760	Key — Flywheel	1
55	393576	Housing — Rewind Starter	1
56	295871	Pulley — Rewind Starter Note: Includes 63" rope; if longer rope is required, order rope No. 66894 and cut to required length.	1
57	294303	Spring — Rewind Starter	1
58	66884	Rope — Rewind Starter — 63" long. For use with Plastic Pulley; if longer rope is needed, order No. 66894 and cut to required length.	1
59	230228	Pin — Starter Grip	1
60	66728	Grip — Starter Rope	1

Ref. No.	Part No.	Description	No. Used
63	260414	Spring — Ratchet	1
64	230543	Adapter — Ratchet Spring	1
65	93067	Screw — Stamped Steel Rewind Starter Housing Mounting Note: 93572 Screw — Cast Rewind Starter Housing Mounting 230796 Nut — Starter Mounting (4) 92290 Washer — Lock (4). Used on type Nos. 0152, 0651, 0668, 0688, 0743	1
66	393117	Clutch Assy. — Rewind Starter	1
67	261453	Housing — Rewind Starter Clutch	1
68	63770	Ball — Clutch	1
69	66718	Washer — Starter Clutch, Thrust	1
70	298799	Ratchet — Rewind Starter Clutch	1
71	221653	Washer — Retainer	1
73	221796	Screen — Rewind Starter	1
74	93042	Screw	1
75	220865	Washer — Spring	1
76	68238	Washer — Ratchet Sealing	1
200	221760	Guide — Air	1
231	93064	Screw	1
304	390516	Housing — Blower	1

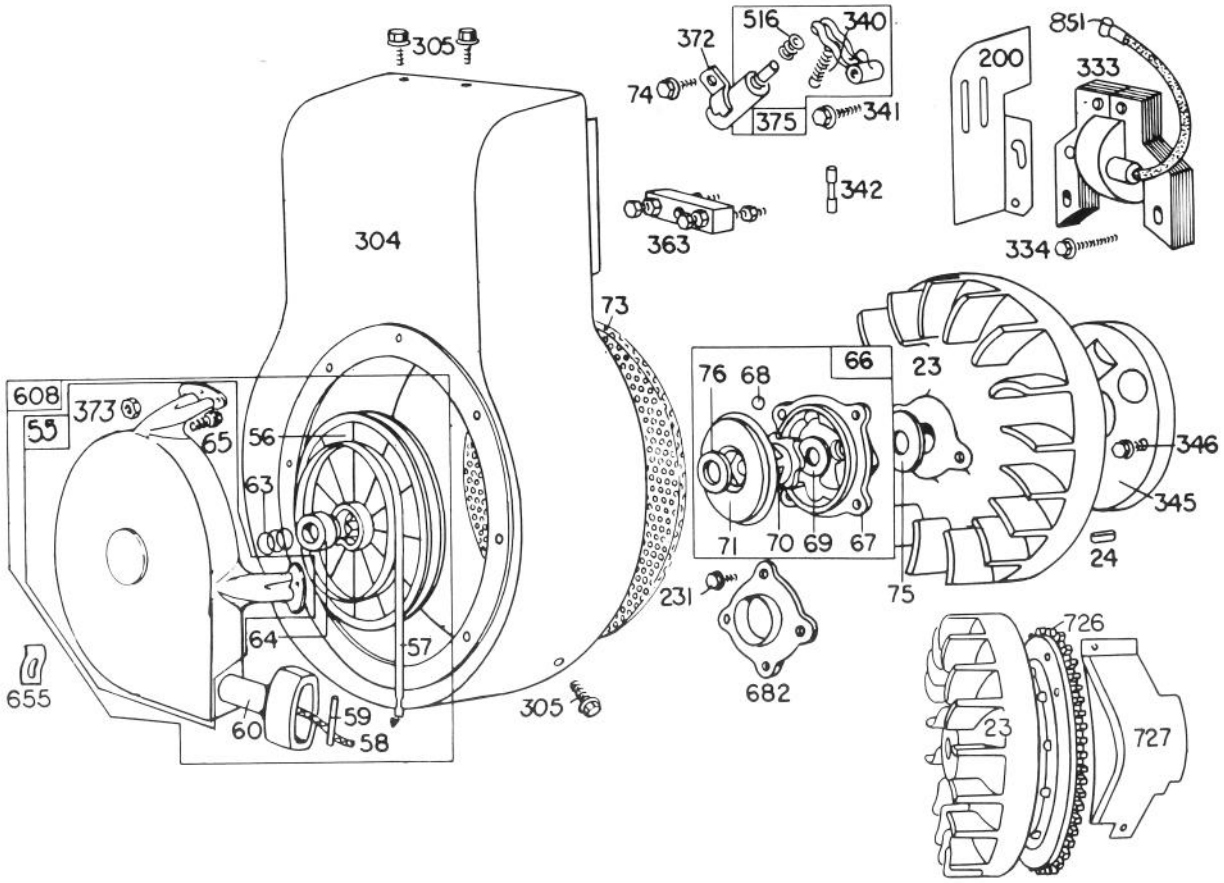

ENGINE BRIGGS & STRATTON MODEL NO. 190402 TYPE 0989-01 (Continued)

(8 H.P. SNOWTHROWER MODEL 38150)

Ref. No.	Part No.	Description	No. Used
305	93158	Screw	1
333	298968	Armature Assembly	1
334	93381	Screw – Armature Mounting	1
340	26018	Spring – Breaker Arm	1
341	93381	Screw – Breaker Arm Mounting	1
342	65704	Plunger – Breaker Point	1
345	222170	Cover – Breaker Point	1
346	93014	Screw	1
363	19203	Puller – Flywheel (Optional Accessory)	1
372	220477	Clamp – Condenser	1
373	92987	Nut – Hex	1
375	294628	Breaker Points and Condenser Set Note: 299061 Ignition Kit Includes: 294628 Point Set 65704 Plunger 61760 Key – Flywheel	1

Ref. No.	Part No.	Description	No. Used
516	260374	Spring – Connector	1
608	390391	Starter Assembly – Rewind Note: For Starter Assembly with longer than standard Rope – order No. 299640	1
655	222598	Anchor – Spring	1
682	211516	Shield – Starter Clutch	1
726	392134	Gear – Ring (Aluminum – includes Mounting Parts)	1
727	221940	Guard – Ring Gear Uses: 93623 Screw (2) 90366 Lockwasher (2) Used to mount Guard	1
851	221798	Terminal – Cable	1

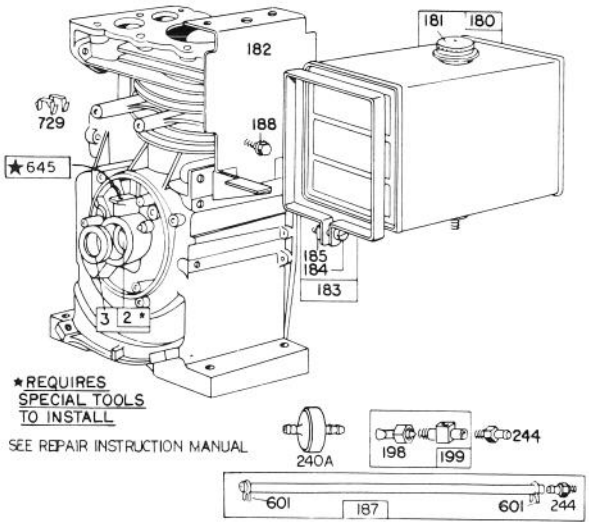

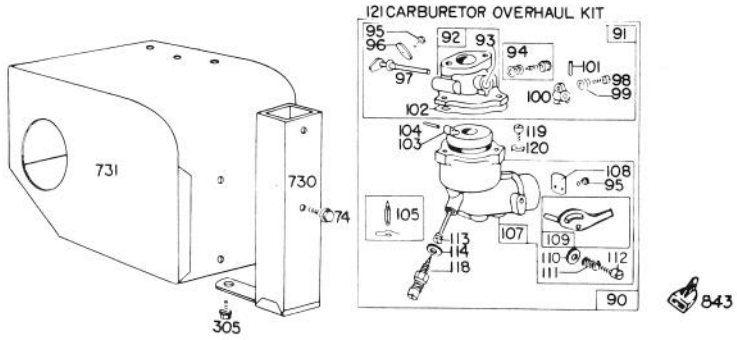

ENGINE BRIGGS & STRATTON MODEL NO. 190402 TYPE 0989-01

(8 H.P. SNOWTHROWER MODEL 38150)

Ref. No.	Part No.	Description	No. Used
2	295962	Bushing – Cylinder Note: Requires special tools for installation.	1
3	294606	Seal – Oil	1
74	93042	Screw	1
90	391889	Carburetor Assembly	1
91	390404	Body Assembly – Upper Carburetor	1
92	390503	Body – Upper Carb.	1
93	23108	Bushing – Throttle Shaft	1
94	†292681	Valve Assembly – Carburetor Idle	1
95	93499	Screw – Throttle and Choke Valve Mtg.	1
96	62940	Valve – Throttle	1
97	298826	Shaft and Lever – Throttle	1
98	91920	Screw – Machine, Fil. Hd.	1
99	26157	Spring – Throttle Adjustment	1
100	61967	Stop – Throttle	1
101	93043	Pin – Throttle Stop	1
102	†27918	Gasket – Carburetor Body	1
103	99333	Float – Carburetor	1
104	†230896	Pin – Float Hinge	1

Ref. No.	Part No.	Description	No. Used
105	299096	Valve – Fuel Inlet	1
107	391909	Body Assy. – Lower Carburetor	1
108	62872	Valve – Choke	1
109	391888	Shaft and Lever – Choke	1
110	62899	Washer – Choke Lever	1
111	26155	Spring – Choke Lever	1
112	23123	Screw – Choke Lever	1
113	†390395	Nozzle – Carburetor	1
114	†68667	Gasket – Nozzle	1
118	†99525	Valve – Needle	1
119	90746	Screw – Machine, Fil. Hd.	1
120	92290	Washer – Lock	1
121	295938	Carburetor Overhaul Kit	1
180	290816	Tank Assembly – Fuel (4 qt)	1
181	297866	Cap – Fuel Tank	1
182	221935	Bracket – Fuel Tank	1
183	291367	Strap Assembly – Fuel Tank	1
184	91257	Screw – Machine, Fil. Hd.	1
185	90970	Nut – Square	1
187	391498	Pipe – Fuel (Flexible) 17-7/16" long	1
188	93535	Screw	1
198	293934	Valve – Fuel Shut-Off	1

†Included in Carburetor Overhaul Kit – Part No. 295938

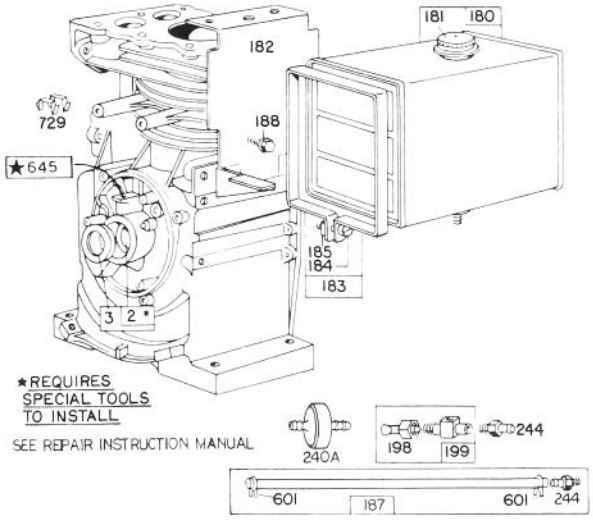

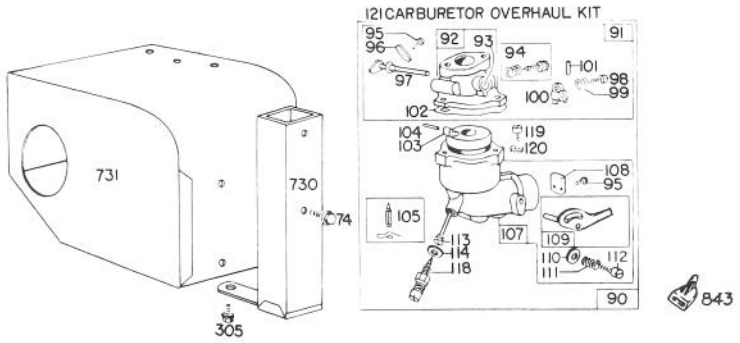

ENGINE BRIGGS & STRATTON MODEL NO. 190402 TYPE 0989-01 (Continued)

(8 H.P. SNOWTHROWER MODEL 38150)

Ref. No.	Part No.	Description	No. Used
199	297563	Outlet – Fuel Tank	1
240A	298090	Filter – Fuel (In Fuel Pipe)	1
244	230318	Connector – Fuel Pipe	1
305	93158	Screw	1
601	93053	Clamp – Fuel Pipe	1

Ref. No.	Part No.	Description	No. Used
729	221907	Clip – Wire	1
730	299384	Stack – Carb.	1
731	299391	Hood – Snow	1
843	280147	Knob – Choke Lever (For Sno-Gard Engines)	1

ENGINE BRIGGS & STRATTON MODEL NO.252412
TYPE NO. 0191-01
(11 H.P. SNOWTHROWER MODEL 38090)

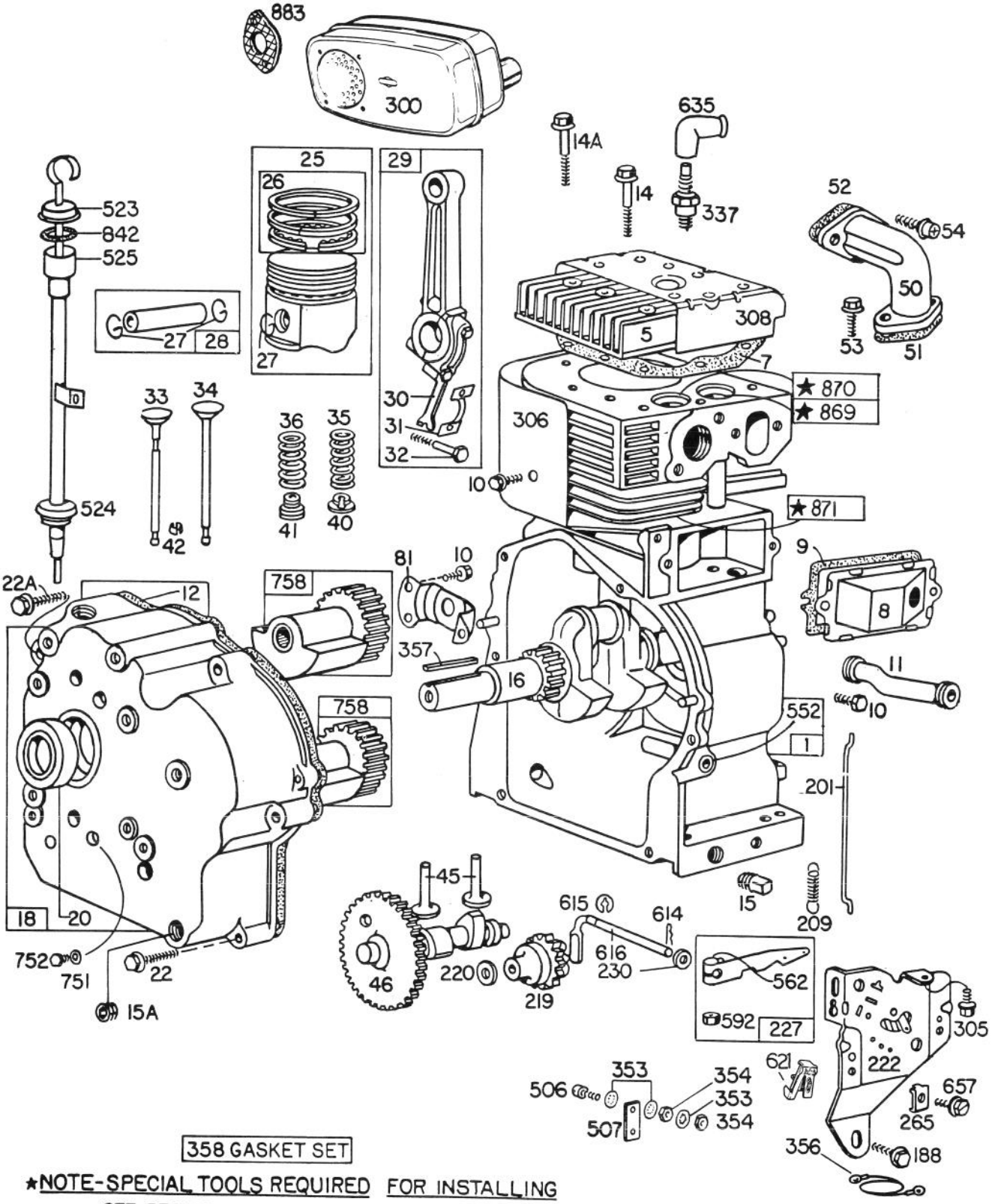

358 GASKET SET

★NOTE-SPECIAL TOOLS REQUIRED FOR INSTALLING
SEE REPAIR INSTRUCTION MANUAL

ENGINE BRIGGS & STRATTON MODEL NO. 252412
TYPE NO. 0191-01
(11 H.P. SNOWTHROWER MODEL 38090)

Ref. No.	Part No.	Description	No. Used
1	393413	Cylinder Assembly	1
5	212305	Head – Cylinder	1
7	271075	Gasket – Cylinder Hd.	1
8	391575	Breather Assembly	1
9	*27803	Gasket – Valve Cover	1
10	93394	Screw	1
11	280112	Tube – Breather	1
12	*270856	Gasket – Crankcase Cover – 1/64" thick	1
	*270857	Gasket – Crankcase Cover – .005" thick	1
	*270858	Gasket – Crankcase Cover – .009" thick	1
14	93723	Screw – Cylinder Head (3" long)	1
14A	93211	Screw – Cylinder Head (2-21/32" long)	6
		Note: 93781 Stud – Cyl. Hd.	2
		22963 Washer	2
15	91084	Plug – Oil Drain	1
15A	93418	Plug – Hex. Socket	1
16	261336	Crankshaft	1
18	391747	Cover Assembly – Crankcase	1
20	291675	Seal – Oil	1
22	93585	Screw – Crankcase Cover Mtg.	5
		Note: 93730 Stud – Crankcase Cover Mtg.	1
22A	93764	Screw–Crankcase Cover Mounting (2-1/8" long)	1
25	391285	Piston Assembly – Standard	1
	391287	Piston Assembly – .010" O.S.	1
	391288	Piston Assembly – .020" O.S.	1
	391289	Piston Assembly – .030" O.S.	1
		PISTON RING SETS:	
26	391780	Ring Set – Piston – Standard	1
	391781	Ring Set – Piston – .010" O.S.	1
	391782	Ring Set – Piston – .020" O.S.	1
	391783	Ring Set – Piston – .030" O.S.	1
27	260924	Lock – Piston Pin	1
28	299691	Pin Assy. – Piston – Standard	1
	391286	Pin Assy. – Piston – .005" O.S.	1
29	391816	Rod Assembly – Connecting	1
		Note: For Connecting Rod with .020" undersize Crankpin Bore – Order No. 393712.	
30	222329	Dipper – Connecting Rod	1
31	222299	Lock – Connecting Rod Screw	1
32	92909	Screw – Connecting Rod	1
33	261185	Valve – Exhaust	1
34	261462	Valve – Intake	1
35	65906	Spring – Intake Valve	1
36	26828	Spring – Exhaust Valve	1
40	221596	Retainer – Intake Valve	1
41	292260	Rotocoil – Exhaust Valve	1
42	93630	Retainer – Exhaust Valve Rotocoil	2
45	261183	Tappet – Valve	1
46	212296	Gear – Cam	1
50	212301	Elbow – Intake	1
51	*270267	Gasket – Carb. Mtg.	1

Ref. No.	Part No.	Description	No. Used
52	*270872	Gasket – Intake Elbow Mounting	1
53	93415	Screw – Carburetor Mounting	1
54	93208	Screw – Intake Elbow Mounting	1
81	222407	Retainer – Counterweight	1
188	93535	Screw	1
201	261236	Link – Governor	1
209	260695	Spring – Governor	1
219	391737	Gear – Governor	1
220	221551	Washer – Thrust	1
222	391633	Plate – Gov. Control	1
227	391732	Lever Assy. – Governor	1
230	222450	Washer – Gov. Crank	1
265	221535	Clamp – Casing	1
		Note: 220680 Washer – Flat used between clamp and Insulator	1
300	392101	Muffler – Exhaust	1
305	93158	Screw	1
306	222744	Shield – Cylinder	1
308	222306	Cover – Cylinder Head	1
337	293918	Plug – Spark (Reistor Type – 1-1/2")	1
		Note: Spark Plugs use Ignition Cable Terminal No. 221798	1
353	92791	Washer – Lock	3
354	90576	Nut – Hex.	2
356	391602	Wire – Ground	1
		Note: 391255 Wire – Jumper Used in addition to No. 391602 Ground Wire	1
357	91540	Key – Pulley	1
358	391834	Gasket Set	1
506	90200	Screw – Machine, Fill. Hd.	1
507	66895	Insulator – Terminal	1
523	392295	Cap and Dipstick – Oil Filler	1
524	68838	Seal – Filler Tube	1
525	392283	Tube – Oil Filler	1
552	231056	Bushing – Gov. Crank	1
562	92613	Bolt – Governor Lever	1
592	231082	Nut – Hex.	1
614	93306	Cotter – Hair Pin	1
615	93307	Retainer – E-Ring	1
616	231057	Crank – Governor	1
621	297472	Switch – Stop	1
635	66538	Elbow – Spark Plug	1
657	93496	Screw	1
751	22355	Washer – Flat	1
752	93554	Screw – Plug	1
758	391481	Counterweight and Bearing Assembly	1
842	270933	Seal – Oil Filler Cap	1
869	261463	Seat – Intake Valve (Standard)	1
870	210940	Seat – Exhaust Valve (Standard)	1
871	230665	Guide – Exhaust Valve	1
883	270917	Gasket – Exhaust	

*Included in Gasket Set – Part No. 391834.

ENGINE BRIGGS & STRATTON MODEL NO. 252412
TYPE NO. 0191-01
(11 H.P. SNOWTHROWER MODEL 38090)

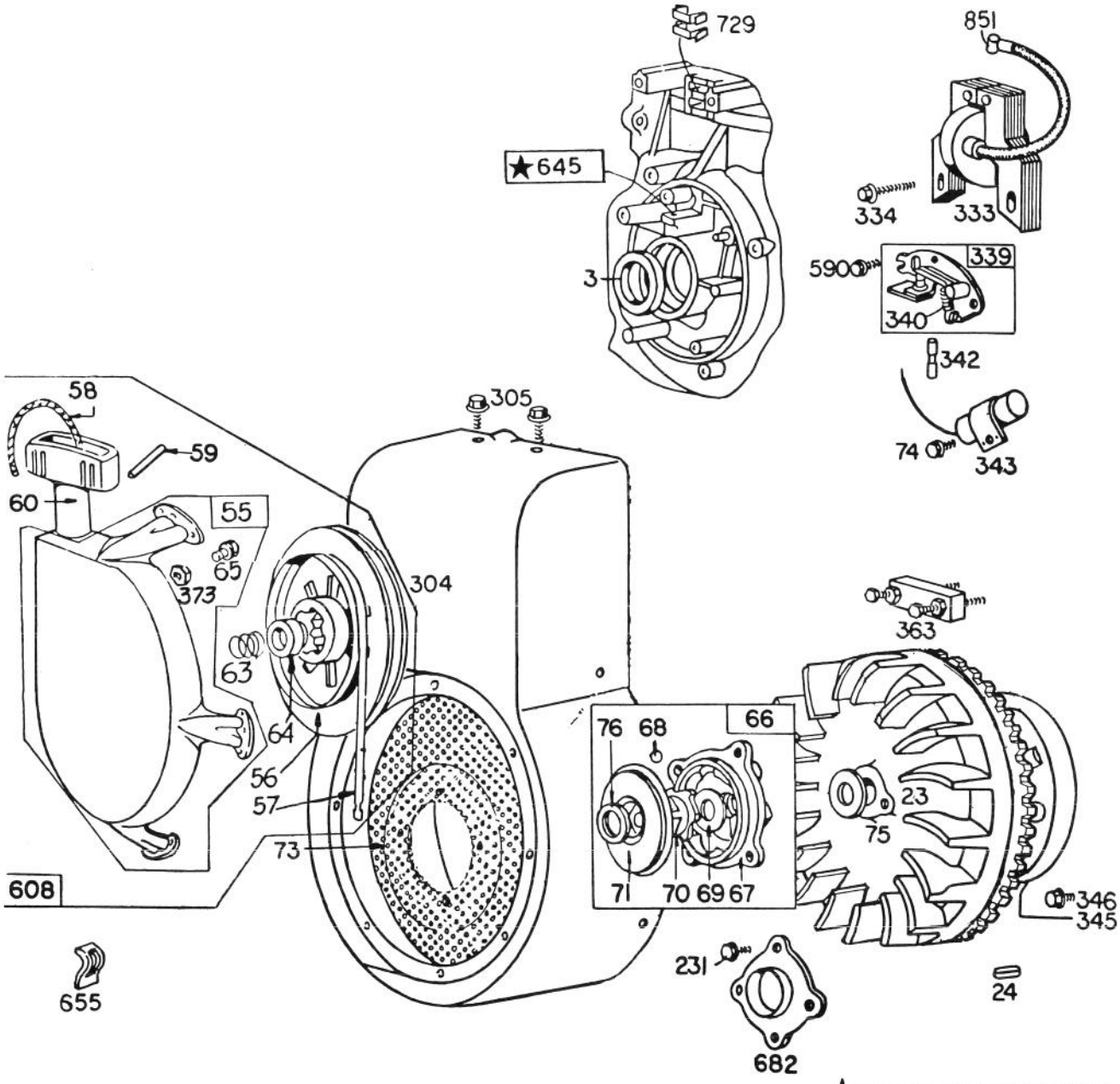

ENGINE BRIGGS & STRATTON MODEL NO. 252412
TYPE NO. 0191-01
(11 H.P. SNOWTHROWER MODEL 38090)

Ref. No.	Part No.	Description	No. Used
3	391086	Seal – Oil	1
23	391988	Flywheel and Ring Gear Assy. – Magneto	1
24	61760	Key – Flywheel	1
55	393576	Housing – Rewind Starter	1
56	295871	Pulley – Rewind Starter (Includes 63" Rope)	1
57	294303	Spring – Rewind Starter	1
58	66884	Rope – Rewind Starter (63" Long)	1
59	230228	Pin – Starter Grip	1
60	66728	Grip – Starter Rope	1
63	260414	Spring – Ratchet	1
64	230543	Adapter – Ratchet Spring	1
65	93067	Screw – Rewind Starter	1
66	393117	Clutch Assy. – Rewind Starter for use on engines with Electric Motor or Equipped for Electric Motor	1
67	261453	Housing – Rewind Starter Clutch for use on engines with Electric Motor or equipped for Electric Motor	1
68	63770	Ball – Clutch	1
69	66718	Washer – Starter Clutch Thrust	1
70	298799	Ratchet – Rewind Starter Clutch	1

Ref. No.	Part No.	Description	No. Used
71	221653	Washer – Retainer	1
73	221796	Screen – Rotating	1
74	93042	Screw	1
75	220865	Washer – Spring	1
76	68238	Washer – Ratchet Sealing	1
231	93064	Screw	1
304	392738	Housing – Blower	1
305	93158	Screw	1
333	298968	Armature Assembly	1
334	93381	Screw – Armature Mounting	1
339	391284	Breaker Assy. – Ignition	1
340	26018	Spring – Breaker Arm	1
342	65704	Plunger – Breaker Point	1
343	391792	Condenser	1
345	222517	Cover – Breaker Point	1
346	93705	Screw	1
363	19203	Puller – Flywheel (Optional Accessory)	1
373	92987	Nut – Hex	1
590	93226	Screw – Breaker Adjusting	1
608	390391	Starter Assy. – Rewind	1
645	23513	Bushing – Breaker Plunger	1
655	222598	Anchor – Spring	1
682	211516	Shield – Starter Clutch	1
729	221907	Clip – Wire	1
851	221798	Terminal – Ignition Cable	1

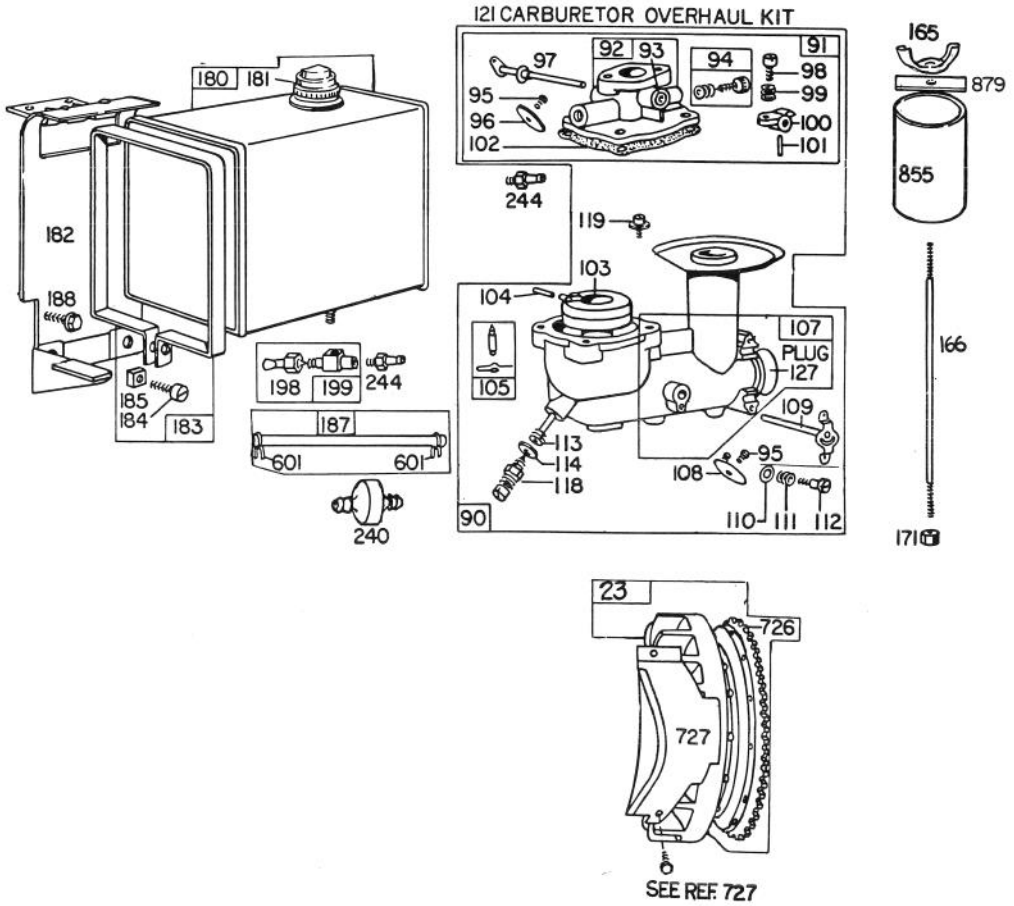

ENGINE BRIGGS & STRATTON MODEL NO. 252412
TYPE NO. 0191-01
(11 H.P. SNOWTHROWER MODEL 38090)

Ref. No.	Part No.	Description	No. Used
23	391988	Flywheel and Ring Gear Assembly – Magneto	1
90	391992	Carburetor Assembly (Manual Friction)	1
91	391833	Body Assembly – Upper Carburetor	1
92	298759	Body – Upper Carburetor	1
93	23108	Bushing – Throttle Shaft	1
94	†292681	Valve Assembly – Carburetor Idle	1
95	93499	Screw – Throttle and Choke Valve Mtg.	1
96	221939	Valve – Throttle	1
97	391596	Shaft and Lever – Throttle	1
98	91920	Screw – Machine, Fil. Hd.	1
99	26157	Spring – Throttle Adjustment	1
100	61967	Stop – Throttle	1
101	93043	Pin – Throttle Stop	1
102	†*270268	Gasket – Carburetor Body	1
103	298514	Float – Carburetor	1
105	299096	Valve – Fuel Inlet	1

Ref. No.	Part No.	Description	No. Used
107	391829	Body Assy. – Lower Carburetor	1
108	391836	Valve – Choke	1
109	391884	Shaft and Lever – Choke	1
110	62899	Washer – Choke Lever	1
111	26155	Spring – Choke Lever	1
112	23123	Screw – Choke Lever	1
113	†390950	Nozzle – Carburetor	1
114	†68667	Gasket – Nozzle	1
118	†99525	Valve – Needle	1
119	93496	Screw – Machine, Fil. Hd.	1
121	391071	Carburetor Overhaul Kit	1
127	221747	Plug – Welch	1
165	93453	Nut – Wing	1
166	231007	Stud – Air Cleaner	1
171	92129	Nut – Hex.	1
180	290816	Tank Assembly – Fuel (4 Quart)	1
181	297866	Cap – Fuel Tank	1
182	222333	Bracket – Fuel Tank (4 Quart)	1

†Included in Carburetor Overhaul Kit – Part No. 391071.
*Included in Gasket Set – Part No. 391834.

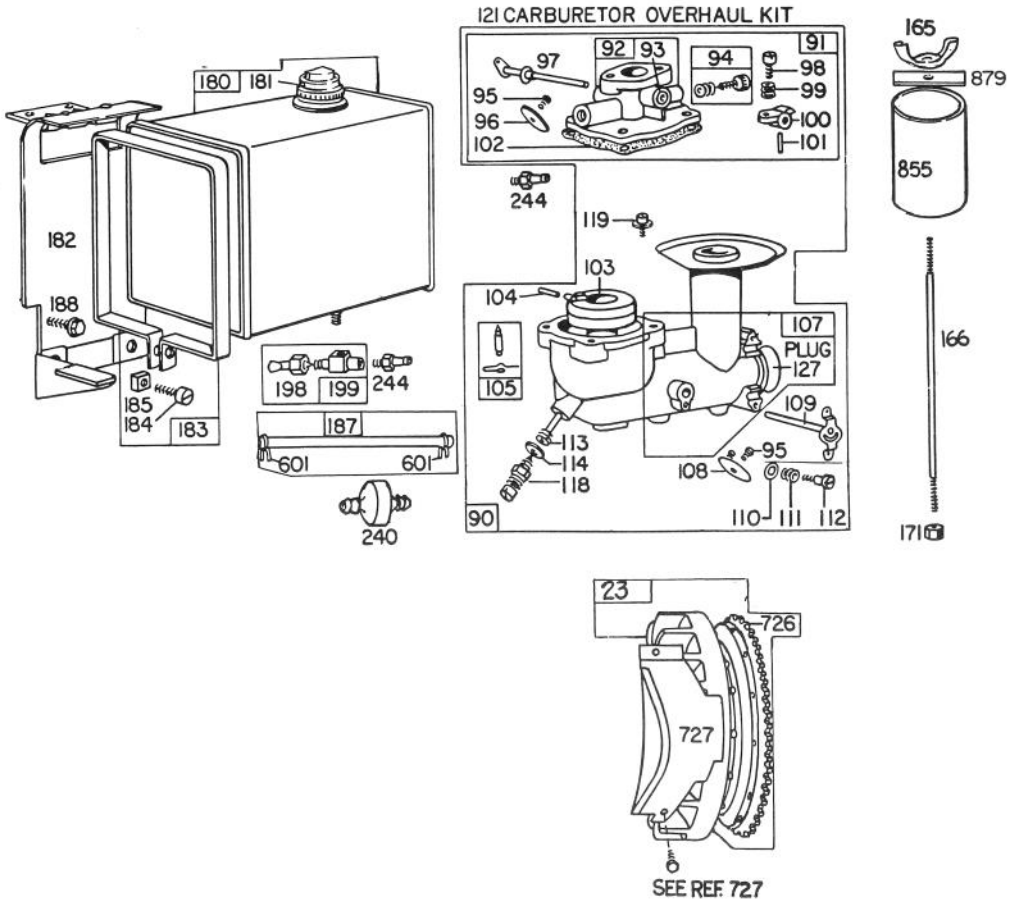

ENGINE BRIGGS & STRATTON MODEL NO. 252412 TYPE NO. 0191-01 (Continued)

(11 H.P. SNOWTHROWER MODEL 38090)

Ref. No.	Part No.	Description	No. Used
183	291367	Strap Assembly – Fuel Tank (4 Quart)	1
184	91257	Screw – Machine, Fil. Hd.	1
185	90970	Nut – Square	1
187	296004	Pipe – Fuel	1
188	93535	Screw	1
198	293934	Valve – Fuel Shut-Off	1
199	297563	Outlet – Fuel Tank	1
240	298090	Filter – Fuel	1

Ref. No.	Part No.	Description	No. Used
244	230318	Connector – Fuel Pipe	1
601	93053	Clamp – Fuel Pipe	
726	392134	Gear – Flywheel Ring (Includes Mounting Parts)	1
727	221940	Guard – Ring Gear	
		Uses: 93623 Screw	2
		90366 Lockwasher	2
		to Mount Guard	
855	231145	Stack – Carburetor	1
879	222726	Strap	1

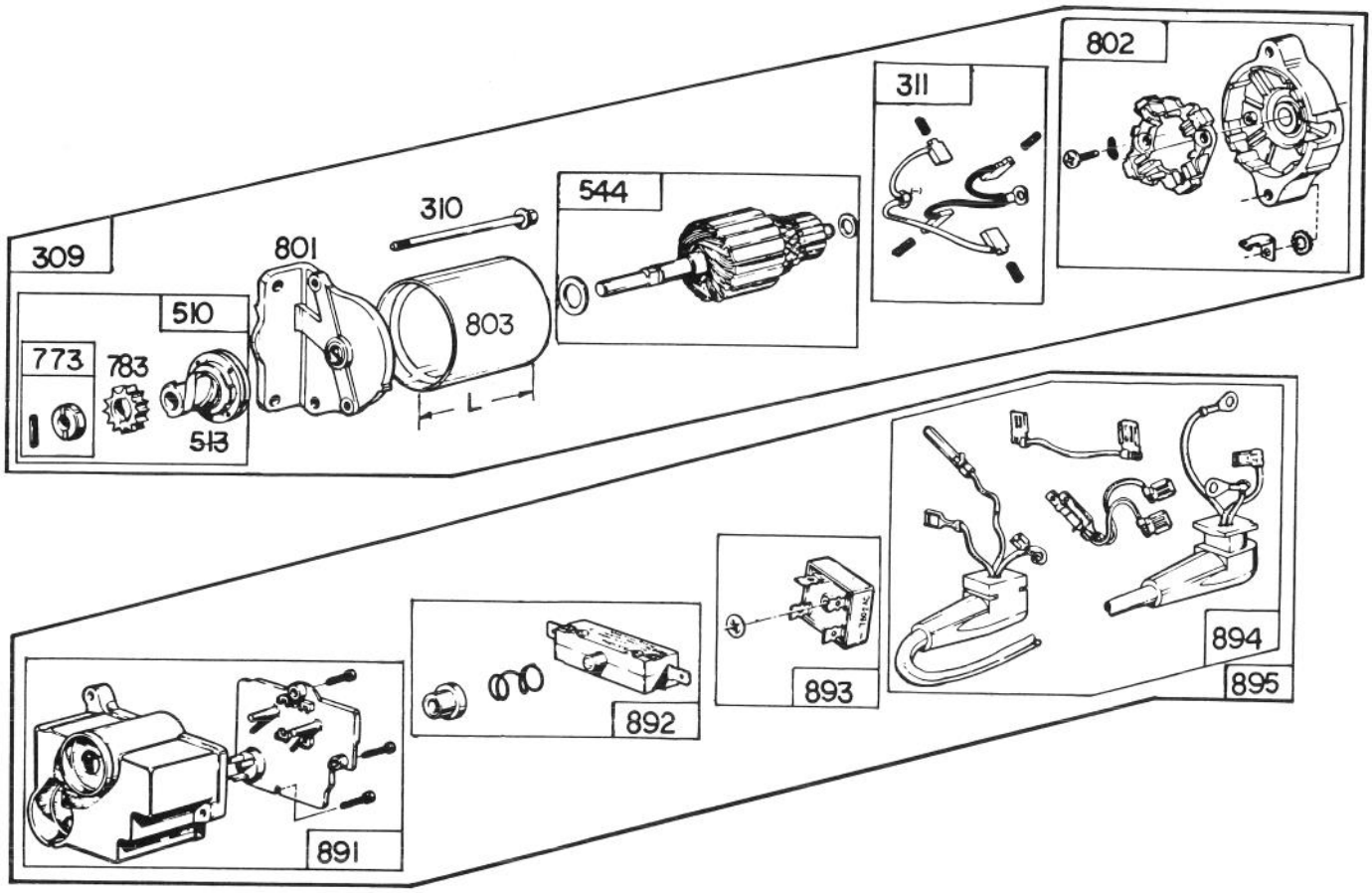

STARTER MOTOR KIT MODEL NO. 37-4630

(8 H.P. & 11 H.P. SNOWTHROWER MODEL 38150 & 38090)

Ref. No.	Part No.	Description	No. Used
309	393851	Motor & Drive Assembly	1
310	93889	Thru Bolt Assembly	1
311	393612	Brush Assembly	1
510	391461	Drive Assembly (Incl. Ref. 513, 773 & 783)	1
513	391135	Clutch Assembly	1
544	393607	Armature Assembly	1
773	391462	Retainer & Pin	1
783	280104	Gear	1
801	393228	Drive End Cap Assembly	1

Ref. No.	Part No.	Description	No. Used
802	393833	Comm. End Cap Assembly	1
803	393433	Housing Assembly	1
891	393705	Housing Group	1
892	393708	Switch Group	1
893	393707	Rectifier	1
894	393706	Lead Group	1
895	393486	Control Group	1
*†	38-0070	Bracket Switch	1
*†	32146-18	Nut	3
*†	3252-6	Fillister Hd. Machine Screw	3

*Not Illustrated †Obtain from The Toro Co.

Note: Obtain replacement parts from your local Briggs & Stratton Dealer.

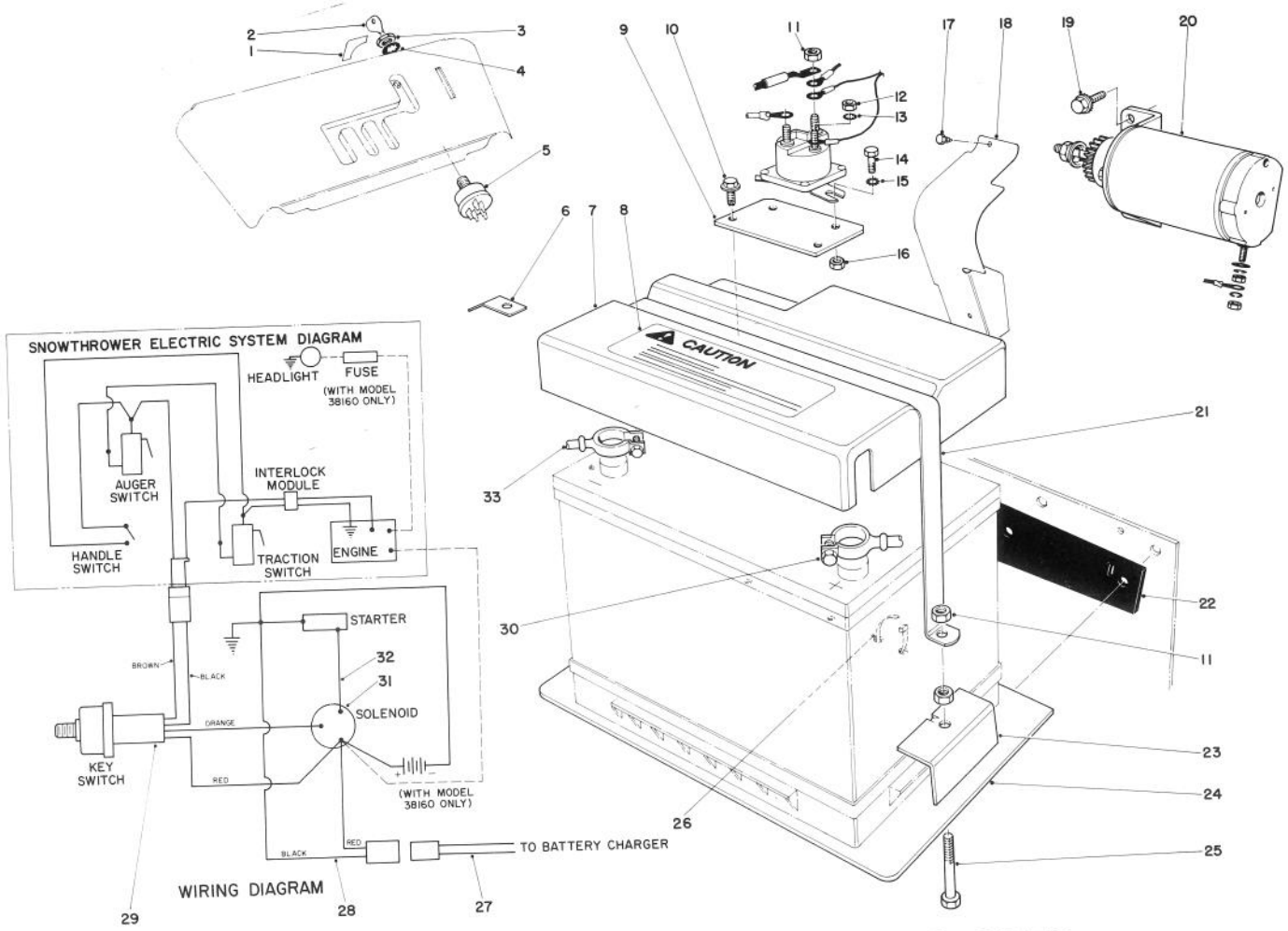

12 VOLT STARTING MOTOR KIT 42-3370

(8 & 11 H.P. SNOWTHROWER MODEL 38150 & 38090)

Ref. No.	Part No.	Description	No. Used
1	38-0640	Decal—Key Switch	1
2	33-2010	Key (Set of 2)	1
3	218-461	Hex Nut	1
4	3254-5	Lockwasher	1
5	42-3990	Starter Switch	1
6	22-9060	Bracket Wire Clamp	1
7	8-2839	Battery Cover (Incl. Ref. #8)	1
8	38-0630	Decal - Caution	1
9	22-8880	Solenoid Mounting Bracket	1
10	32144-10	Thread Forming Screw	2
11	3217-6	Hex Nut	6
12	3219-14	Hex Nut	1
13	3254-1	Lockwasher	1
14	321-2	Capscrew	2
15	3255-7	Lockwasher	2
16	3296-42	Locknut	2
17	32108-57	Self Tapping Screw	2
18	20-7060	Pinion Shield	1

Ref. No.	Part No.	Description	No. Used
19	32140-45	Hex Hd. Screw	2
20†		Starter Motor & Pinion Assy.	1
21	22-8850	Strap Battery Cover	1
22	24-6150	Battery Isolation Pad	1
23	22-8870	Battery Hold Downs	2
24	22-8830	Battery Mounting Plate	1
25	322-10	Capscrew	2
26	3290-378	Tie Wrap	5
27	29-7830	Wire Assembly	1
28	29-7820	Wire Assembly	1
29	42-4000	Wire Harness	1
30	22-9320	Battery Cable	1
31	6-1600	Solenoid	1
32	22-9310	Wire Assembly	1
33	22-9330	Battery Cable	1
*	26-3870	Charger 110V (U.S. & Canada)	1
*	26-7140	Charger 220V (Europe)	1

*Not illustrated; is not included with kit.

†Not available from The Toro Co.; for reference only.
Obtain from your local Briggs & Stratton dealer part no. 391177.

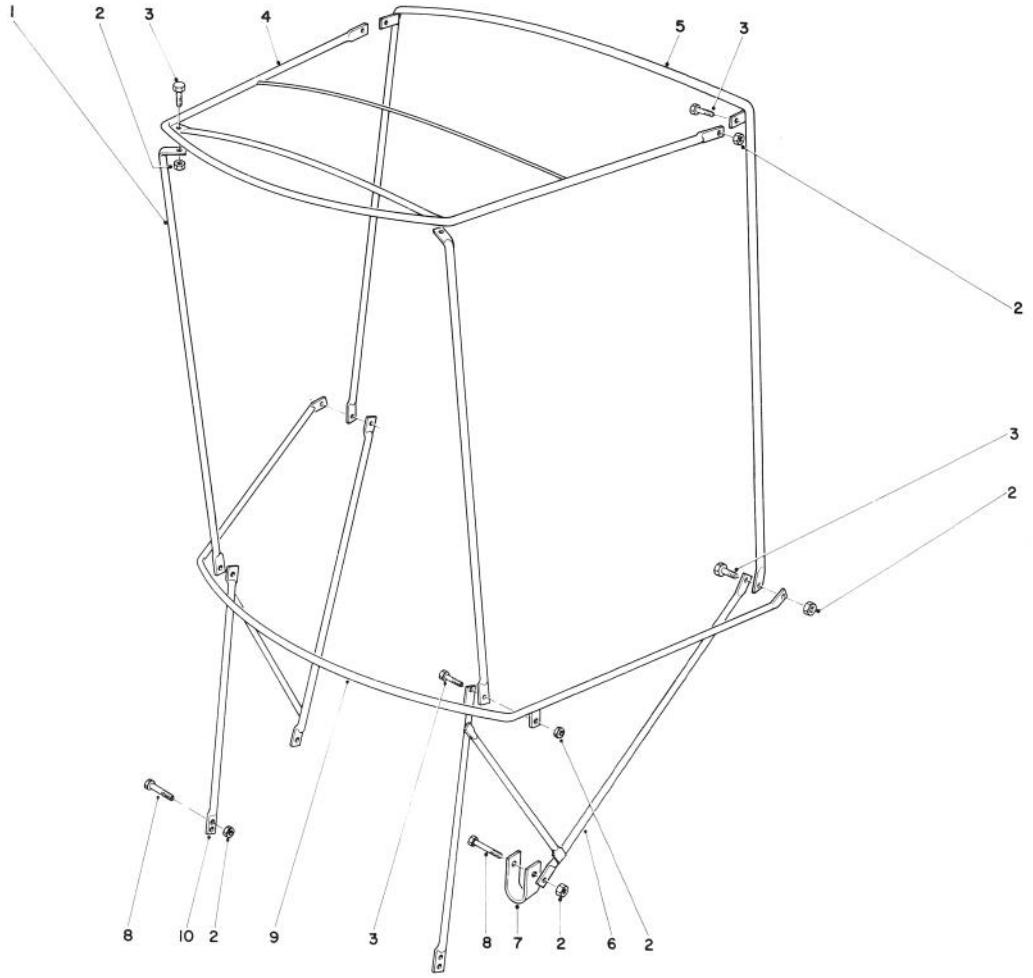

SNOW CAB ASSEMBLY MODEL 42-3380

Ref. No.	Part No.	Description	No. Used
1	12-8040	Front Corner Post	2
2	32146-17	Locknut	12
3	321-4	Capscrew	8
4	12-8010	Top Frame	1
5	12-8030	Rear Vertical Bow	1
6	42-4060	Attaching Bracket L.H.	1

Ref. No.	Part No.	Description	No. Used
7	12-8050	"U" Clamp	2
8	321-11	Capscrew	4
9	12-8020	Horizontal Curved Bow	1
10	42-4050	Attaching Bracket R.H.	1
*	42-4070	Vinyl Cover	1

*Not Illustrated

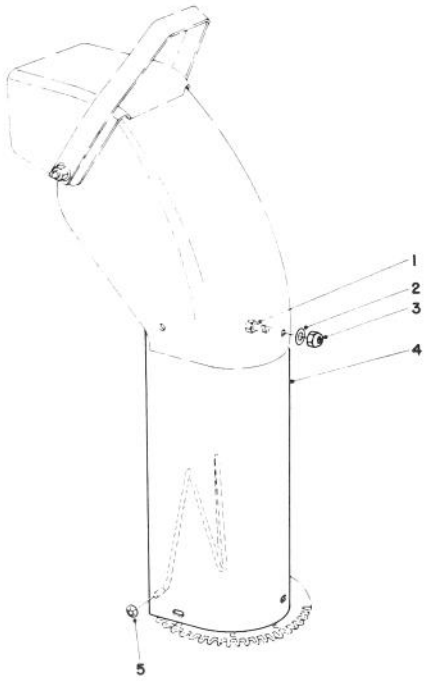

CHUTE EXTENSION KIT 26-1100

Ref. No.	Part No.	Description	No. Used
1	322-2	Hex Hd. Capscrew	6
2	3256-23	Washer	6
3	32152-1	Locknut	6

Ref. No.	Part No.	Description	No. Used
4†		Upper Chute Extender	1
5	3290-326	Pushnuts	2

†Not available, for reference only.

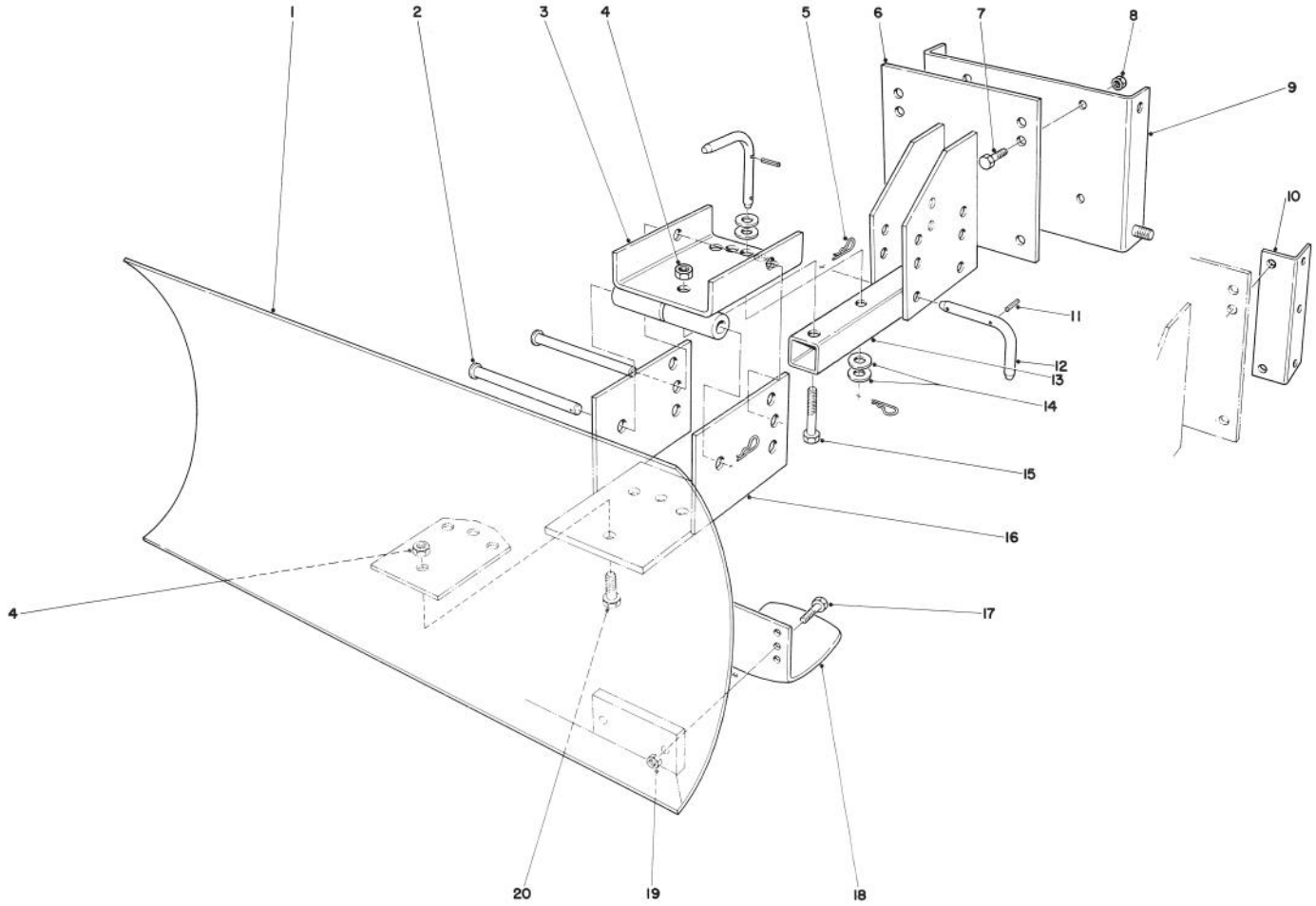

GRADER BLADE ASSEMBLY (Model No. 59099)

Ref. No.	Part No.	Description	No. Used
1	7-4374	Blade	1
2	283-38	Pin	2
3	20-5090	Swivel Bracket	1
4	32152-3	Locknut	5
5	3290-322	Hair Pin Cotter	5
6	20-5170	Mounting Plate	1
7	323-6	Capscrew	4
8	32152-2	Locknut	4
9	22-4920	Mounting Plate Bracket (used with 826 and 1132 only)	1
10	39-7850	Mounting Rail (used with 421 units only)	2

Ref. No.	Part No.	Description	No. Used
11	32121-45	Roll Pin	3
12	20-5210	Pivot Pin (Incl. Ref. #11)	3
13	20-5140	Blade Tongue	1
14	3256-5	Flat Washer	4
15	325-11	Capscrew	1
16	20-5130	Blade Adjustment Plate	1
17	322-6	Capscrew	4
18	7-1023	Skid	2
19	32152-1	Locknut	4
20	325-5	Capscrew	4
*	20-9960	Air Cleaner Kit (B & S)	1

*Not Illustrated

The Toro Promise

A ONE YEAR LIMITED WARRANTY

The Toro Company promises to repair any TORO Product if defective in materials or workmanship. The following time periods from the date of purchase apply:

Residential Product	1 Year
Residential Products Used Commercially . . .	45 Days

The costs of parts and labor are included, but the customer pays the transportation costs. Just return any residential product to an Authorized TORO Service Dealer or TORO Distributor.

Should you feel your TORO Product is defective and wish to rely on The Toro Promise, the following procedure is recommended:

1. Contact any Authorized TORO Service Dealer, TORO Master Service Dealer, or TORO Distributor (the Yellow Pages of your telephone directory is a good reference source).
2. He will either instruct you to return the product to him or recommend another Authorized TORO Service outlet which might be more convenient.
3. Bring the product along with your original sales slip, or other evidence of purchase date, to the service dealer.
4. The servicing dealer will inspect the unit, advise you whether the product is defective and, if so, make all repairs necessary to correct the defect without extra charge to you.

If for any reason you are dissatisfied with the dealer's analysis of the defect or the service performed, you may contact us.

Write:

TORO Consumer Service Department
8111 Lyndale Avenue South
Minneapolis, Minnesota 55420

The above remedy of product defects through repair by an Authorized TORO Service Dealer is the purchaser's sole remedy for any defect.

THERE IS NO OTHER EXPRESS WARRANTY. ALL IMPLIED WARRANTIES OF MERCHANTABILITY AND FITNESS FOR USE ARE LIMITED TO THE DURATION OF THE EXPRESS WARRANTY.

Some states do not allow limitations on how long an implied warranty lasts, so the above limitation may not apply to you.

This warranty applies only to parts or components which are defective and does not cover repairs necessary due to normal wear, misuse, accidents, or lack of proper maintenance. Regular, routine maintenance of the unit to keep it in proper operating condition is the responsibility of the owner.

All warranty repairs reimbursable under The Toro Promise must be performed by an Authorized TORO Service Dealer using Toro approved replacement parts.

Repairs or attempted repairs by anyone other than an Authorized TORO Service Account are not reimbursable under The Toro Promise. In addition, these unauthorized repair attempts may result in additional malfunctions, the correction of which is not covered by warranty.

THE TORO COMPANY IS NOT LIABLE FOR INDIRECT, INCIDENTAL OR CONSEQUENTIAL DAMAGES IN CONNECTION WITH THE USE OF THE PRODUCT INCLUDING ANY COST OR EXPENSE OF PROVIDING SUBSTITUTE EQUIPMENT OR SERVICE DURING PERIODS OF MALFUNCTION OR NON-USE.

Some states do not allow the exclusion or limitation of incidental or consequential damages, so the above limitation or exclusion may not apply to you.

This warranty gives you specific legal rights, and you may also have other rights which vary from state to state.

COUNTRIES OTHER THAN THE UNITED STATES OR CANADA

Customers who have purchased TORO products exported from the United States or Canada should contact their TORO Distributor (Dealer) to obtain guarantee policies for your country, province or state. If for any reason you are dissatisfied with your Distributor's service or have difficulty obtaining guarantee information, contact the TORO importer. If all other remedies fail, you may contact us at The Toro Company.

International Group
Service Department
One Corporate Center
7401 Metro Boulevard
Minneapolis, Minnesota 55435 U.S.A.

Compliance with Radio Interference Regulations Certified.
Certifie Conforme au Reglement sur le Brouillage Radioelectrique.

V20-875

PRODUCT CHANGES

In an effort to make improvements available to TORO owners as quickly as possible, minor changes are incorporated into Toro's products from time to time that do not become immediately shown in the Parts Catalog. If such a change apparently has been made in your unit, which is not reflected in your manual, see your TORO Distributor or his Authorized TORO Service Dealer for information and part numbers.

IDENTIFICATION AND ORDERING

Model and Serial Numbers

The Snowthrower has two identification numbers: a model number and a serial number. The two numbers are stamped on a decal which is located on left rear side of the engine mounting plate. In any correspondence concerning the Snowthrower, supply model and serial numbers to assure that correct information and replacement parts are obtained.

To order replacement parts from an Authorized TORO Service Dealer, supply the following information:

1. Model and serial numbers of the Snowthrower.
2. Part number, description, and quantity of part(s) desired.

NOTE: Do not order by reference number if a parts catalog is being used; use the PART NUMBER.

Keep Your TORO All Toro Genuine TORO PARTS & ACCESSORIES ***Insist on Genuine Toro Parts***

MAINTENANCE RECORD

Litho in U.S.A.