Form No. 3328–420

# Mid–Size Mower

## ProLine Gear, 15hp with 48in Side Discharge Mower

**Model No. 30523—230000001 and Up**

# Parts Catalog

### Ordering Replacement Parts

To order replacement parts, please supply: the part number, the quantity, and the description of each part desired.

### Understanding Reference Numbers

Each identified part in an illustration has a reference number. The reference number for a part also appears in the parts list, along with other information about the part.

This catalog uses two special reference number formats, one to indicate parts in a service assembly and another to indicate the quantity of a given part in an illustration.

#### Service Assembly Reference Numbers

Parts in service assemblies have reference numbers in the form **a:b.** The **a** represents the reference number of the entire service assembly and the **b** represents a sequential number unique to each part within the service assembly.

For example, a wheel assembly might be identified by reference number **6**, the tire by **6:1**, the valve by **6:2**, and the wheel by **6:3**. When you order the assembly identified by reference number 6, you receive all parts identified by reference numbers 6:1, 6:2, and 6:3. However, you may also order any part individually.

Reference numbers of this type appear in illustrations and in part lists.

#### Reference Numbers Indicating Quantity

In an illustration, if a reference number indicates more than one part, the reference number has the form **nX y.** The **n** represents the quantity of the part, the **X** is the multiplication symbol, and the **y** represents the reference number.

For example, in an illustration, the reference number **2X 37** means that two of the parts identified by reference number 37 are indicated.

© The TORO Company — 2002
All Rights Reserved

# Contents


| Description | Page |
|---|---|
| Engine and Fuel System Assembly | 3 |
| Transmission and Drive Pulley Assembly | 4 |
| Wheel Drive Assembly | 6 |
| Upper Handle Assembly | 8 |
| Handle Assembly No. 106–2742 | 10 |
| Front Caster and Blade Brake Assembly | 11 |
| Spindle Assembly | 13 |
| Idler Pulley Assembly | 14 |
| Deck Assembly | 15 |
| Cylinder/Crankcase Assembly Kawasaki FH451V–BS04 | 16 |
| Piston/Crankshaft Assembly Kawasaki FH451V–BS04 | 17 |
| Valve/Camshaft Assembly Kawasaki FH451V–BS04 | 18 |
| Lubrication Equipment Assembly Kawasaki FH451V–BS04 | 19 |
| Cooling Equipment Assembly Kawasaki FH451V–BS04 | 20 |
| Electric Equipment Assembly Kawasaki FH451V–BS04 | 21 |
| Control Equipment Assembly Kawasaki FH451V–BS04 | 22 |
| Carburetor Assembly Kawasaki FH451V–BS04 | 23 |
| Air Filter/Muffler Assembly Kawasaki FH451V–BS04 | 24 |
| Fuel Tank/Fuel Valve Assembly Kawasaki FH451V–BS04 | 25 |
| Starter Assembly Kawasaki FH451V–BS04 | 26 |
| Label Assembly Kawasaki FH451V–BS04 | 27 |


# Accessories

| Description | Model / Part No. |
|---|---|
| Low Sail Blade | 103–2507 |
| Atomic Blade | 104–8595 |
| Recycler Kit | 30143 |
| Bagger Kit | 30198 |

# Part Description Abbreviations

Part descriptions in this catalog may include the following abbreviations.

| Abbreviation | Meaning |
|---|---|
| AR | as required |
| ASM | assembly |
| CARR | carriage |
| DEG | degrees |
| FH | flat head |
| GA | gauge |
| HF | hex flange |
| HH | hex head |
| HHF | hex head flange |
| HLH | hex lag head |
| HJ | hex jam |
| HOC | height-of-cut |
| HS | hex socket |
| HSBH | hex socket button head |
| HSFH | hex socket flat head |
| HSH | hex socket head |
| HWH | hex washer head |
| HWHTF | hex washer head thread forming |
| HYD | hydraulic |
| INC | incorporated |
| LH | left hand |
| NI | nylon insert |
| PPH | Phillips pan head |
| PTH | Phillips truss head |
| PTO | power take off |
| RH | right hand |
| SFH | slotted fillister head |
| SHH | slotted hex head |
| SQH | square head |
| SHWH | slotted hex washer head |
| SPH | slotted pan head |
| SRH | slotted round head |
| STD | standard |
| TAP | self tapping |
| TTH | Torx truss head |
| WH | wing head |

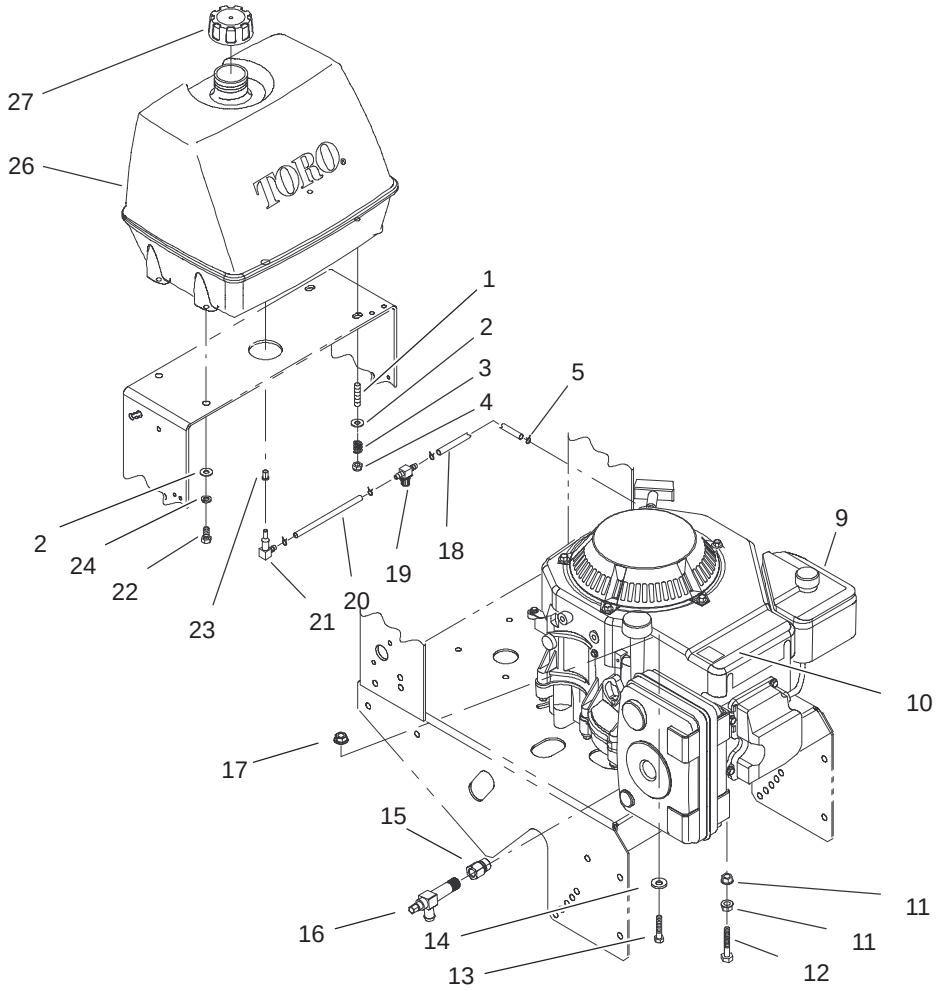


Sheet No.: 2

# Engine and Fuel System Assembly

| Ref. No. | Part No. | Qty. | Description |
|---|---|---|---|
| 1 | 1–633023 | 2 | Stud |
| 2 | 3256–23 | 4 | Washer–Flat |
| 3 | 1–633349 | 2 | Spring–Tank, Fuel |
| 4 | 3296–47 | 2 | Nut–Lock, NI |
| 5 | 1–303077 | 4 | Clamp–Line, Fuel |
| ☆9 | | 1 | Engine–Kawasaki, Fh451v–Bs04 |
| 10 | 63–8440 | 1 | Decal–Surface, Hot |
| 11 | 3290–357 | 2 | Nut–HHF |
| 12 | 323–13 | 1 | Screw–HH |
| 13 | 322–7 | 4 | Screw–HH |
| 14 | 1–303334 | 4 | Washer–Spring |
| 15 | 103–2587 | 1 | Adapter |
| 16 | 103–1965 | 1 | Valve–Drain, Oil |
| 17 | 32128–20 | 4 | Nut–HF |
| 18 | 1–303022 | 1 | Hose–Fuel |
| 19 | 1–603770 | 1 | Valve–Fuel |
| 20 | 1–603955 | 1 | Hose–Fuel |
| 21 | 1–543277 | 1 | Elbow–Tank, Fuel |
| 22 | 322–3 | 2 | Screw–HH |
| 23 | 1–513645 | 1 | Bushing–Valve, Fuel |
| 24 | 1–805005 | 2 | Washer–Lock |
| 26 | 1–323551 | 1 | Tank–Fuel |
| 27 | 1–513508 | 1 | Cap–Fuel |
| *99 | 1–303335 | 1 | Tie–Plastic |

| Ref. No. | Part No. | Qty. | Description |
|---|---|---|---|

☆ Not serviced separately
* Not illustrated

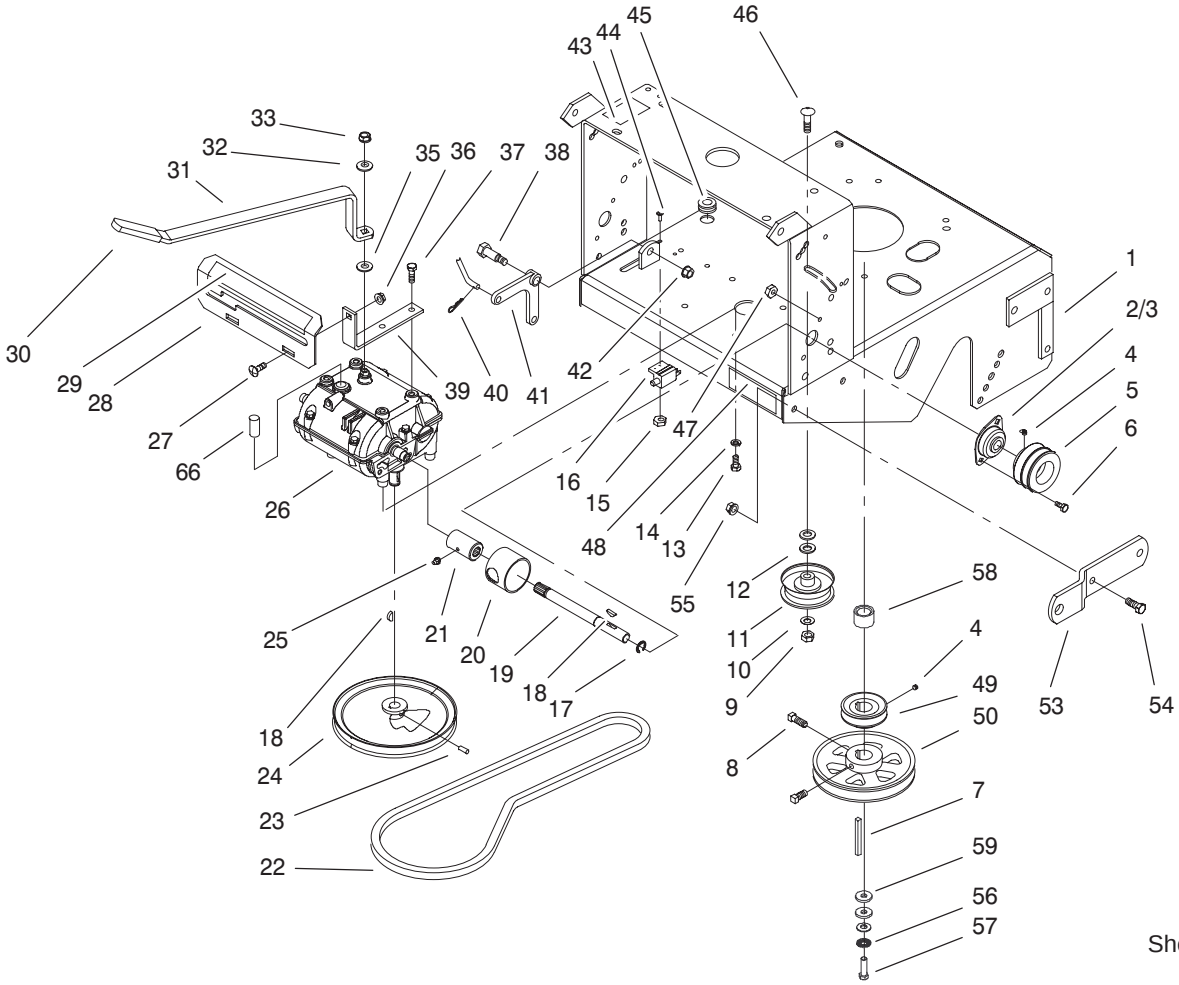


Sheet No.: 3

# Transmission and Drive Pulley Assembly

| Ref. No. | Part No. | Qty. | Description |
|---|---|---|---|
| 1 | 103–2923–01 | 1 | Deck–Rear |
| 2 | 1–323252 | 2 | Bearing–Shaft |
| 3 | 1–323254 | 2 | Flange–Output |
| 4 | 1–803310 | 3 | Screw–Set |
| 5 | 1–323257–03 | 2 | Sheave–Transmission |
| 6 | 321–3 | 4 | Screw–HH |
| 7 | 5–1336 | 1 | Key |
| 8 | 3242–4 | 2 | Screw–Set, SQH |
| 9 | 3296–39 | 1 | Nut–Lock, NI |
| 10 | 3256–24 | 1 | Washer–Flat |
| 11 | 1–323285 | 1 | Idler–Drive, Transmission |
| 12 | 3256–5 | 2 | Washer–Flat |
| 13 | 322–3 | 4 | Screw–HH |
| 14 | 1–805005 | 4 | Washer–Lock |
| 15 | 3296–2 | 2 | Nut–Lock |
| 16 | 1–513051 | 1 | Switch–Open, Normally |
| 17 | 32151–62 | 2 | Ring–Retaining |
| 18 | 3257–5 | 3 | Key–Woodruff |
| 19 | 1–323502 | 2 | Shaft–Transmission |
| 20 | 51–4220 | 2 | Guard–Coupler |
| 21 | 1–323680 | 2 | Coupler |
| 22 | 1–323630 | 1 | V–Belt |
| 23 | 3245–41 | 2 | Screw–HSH |
| 24 | 1–323278 | 1 | Sheave–Transmission |

| Ref. No. | Part No. | Qty. | Description |
|---|---|---|---|
| 25 | 302–19 | 2 | Fitting–Grease |
| 26 | 1–323500 | 1 | Transmission |
| 27 | 3230–1 | 2 | Screw–CARR |
| 28 | 1–323387–03 | 1 | Plate–Shift |
| 29 | 105–4104 | 1 | Decal–Speed, Ground |
| 30 | 1–303020 | 1 | Grip–Lever |
| 31 | 98–3274–03 | 1 | Lever–Shift |
| 32 | 98–5975 | 1 | Washer–Belleville |
| 33 | 3296–6 | 1 | Nut–Lock, NI |
| 35 | 1–323379 | 1 | Washer |
| 36 | 32128–20 | 2 | Nut–HF |
| 37 | 9264964 | 4 | Screw |
| 38 | 1–603403 | 1 | Bolt–Shoulder |
| 39 | 1–323389–03 | 2 | Bracket–Plate, Shift |
| 40 | 1–806003 | 1 | Pin–Hair |
| 41 | 1–303186 | 1 | Bellcrank |
| 42 | 3290–357 | 1 | Nut–HHF |
| 43 | 95–2814 | 1 | Decal–Shut Off, Fuel |
| 44 | 3290–500 | 2 | Screw–PPH |
| 45 | 1–543296 | 1 | Grommet–Line, Fuel |
| 46 | 3231–6 | 1 | Screw–CARR |
| 47 | 3296–42 | 4 | Nut–Lock, NI |
| 48 | 98–0776 | 1 | Decal–Caution |
| 49 | 103–1666 | 1 | Sheave–Transmission |
| 50 | 103–1667 | 1 | Sheave |
| 53 | 1–323318–01 | 2 | Hitch–Sulky |

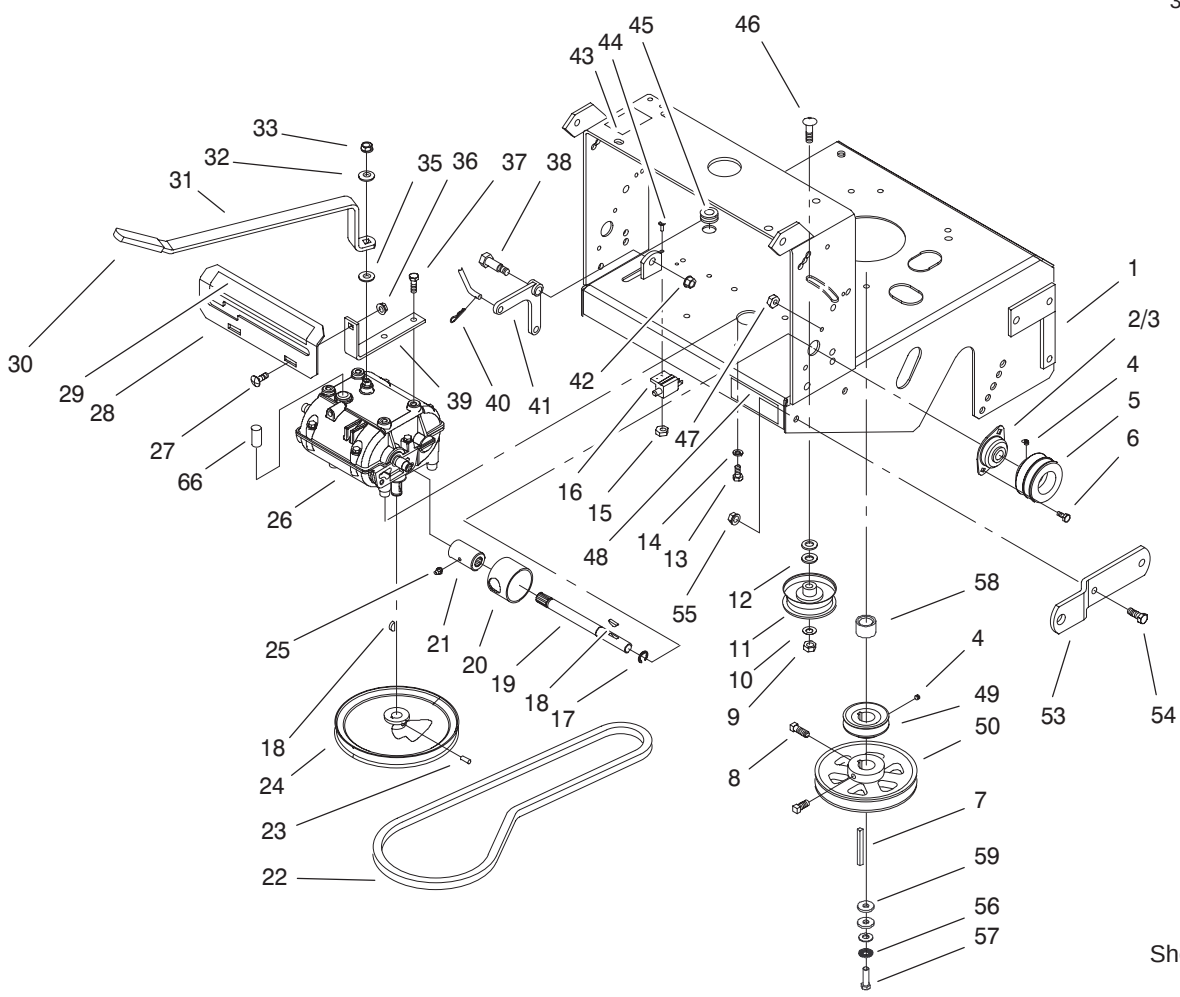


Sheet No.: 3

# Transmission and Drive Pulley Assembly (Continued)

| Ref. No. | Part No. | Qty. | Description |
|---|---|---|---|
| 54 | 323–6 | 4 | Screw–HH |
| 55 | 3290–357 | 4 | Nut–HHF |
| 56 | 1–603610 | 1 | Washer–Spring |
| 57 | 3212–6 | 1 | Screw–HH |
| 58 | 1–633453 | 1 | Spacer–Clutch |
| 59 | 1–373034 | 2 | Washer |
| 66 | 1–303282 | 1 | Switch–Start, Neutral |

| Ref. No. | Part No. | Qty. | Description |
|---|---|---|---|

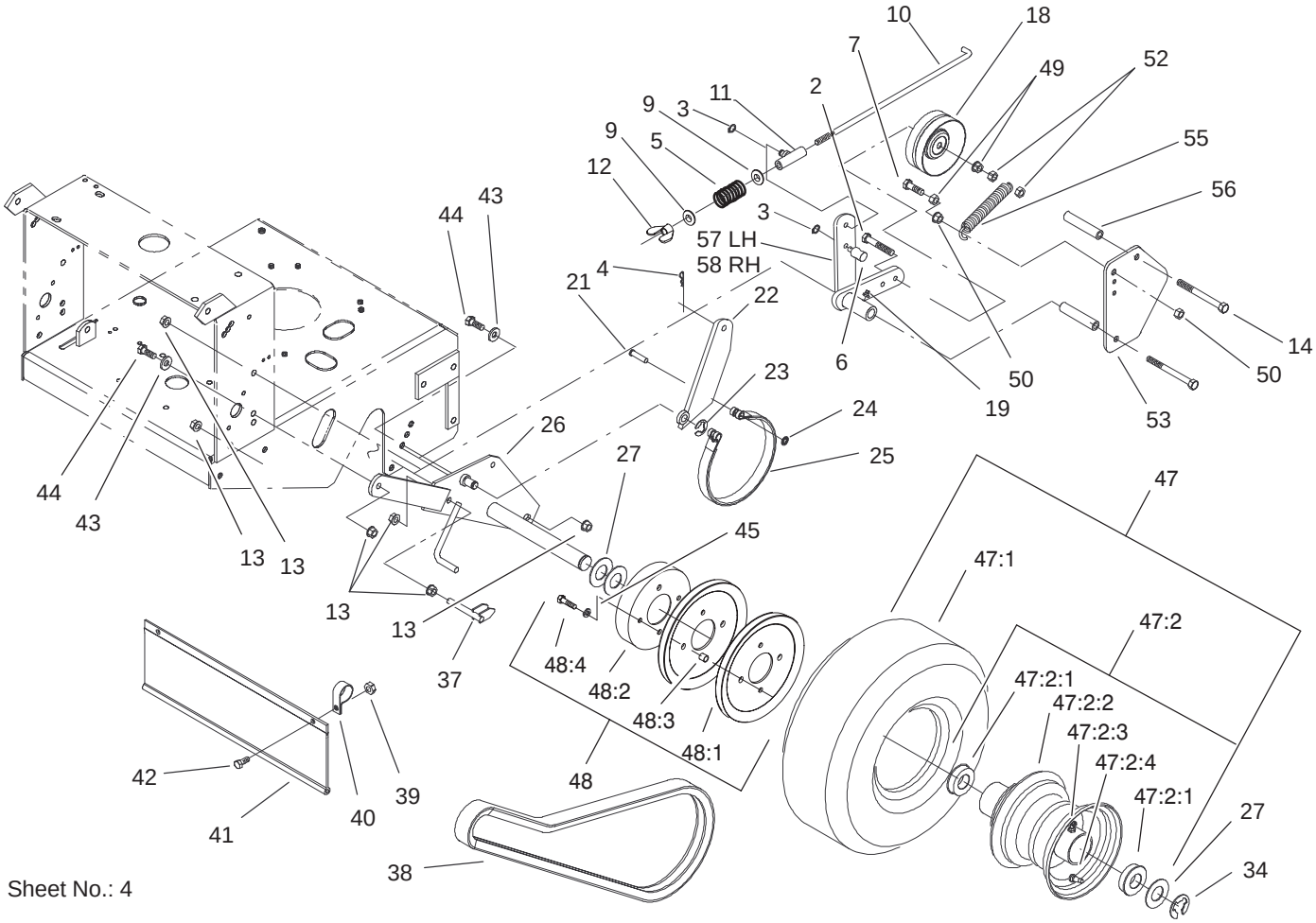


Sheet No.: 4

# Wheel Drive Assembly

| Ref. No. | Part No. | Qty. | Description |
|---|---|---|---|
| 2 | 99–8664 | 2 | Screw–HH |
| 3 | 32151–47 | 6 | Ring–Retaining |
| 4 | 1–806003 | 4 | Pin–Hair |
| 5 | 1–323245 | 2 | Spring–Compression |
| 6 | 103–1864 | 2 | Swivel–Lever, Drive |
| 7 | 322–6 | 2 | Screw–HH |
| 9 | 3256–23 | 4 | Washer–Flat |
| 10 | 1–323548 | 2 | Linkage–Brake |
| 11 | 1–322125 | 2 | Swivel–Brake |
| 12 | 1–513959 | 2 | Wingnut–Nylock |
| 13 | 3290–357 | 14 | Nut–HHF |
| 14 | 323–39 | 4 | Screw–HH |
| 18 | 1–323277 | 2 | Idler–Wheel, Drive |
| 19 | 302–19 | 2 | Fitting–Grease |
| 21 | 1–323307 | 2 | Pin–Clevis |
| 22 | 103–1611–03 | 2 | Arm–Brake |
| 23 | 32120–47 | 2 | Ring–Retaining, External |
| 24 | 1–803051 | 2 | Nut–Push |
| 25 | 1–323262 | 2 | Band–Brake |
| 26 | 1–322117–03 | 1 | Axle |
| 27 | 1–523157 | 6 | Washer–Spacer |
| 27 | 1–543436 | 8 | Washer–Spacer |
| 34 | 1–808519 | 2 | Ring–Snap |
| 36 | 322–6 | 8 | Screw–HH |
| 37 | 1–412358 | 2 | Scraper |

| Ref. No. | Part No. | Qty. | Description |
|---|---|---|---|
| 38 | 1–323631 | 2 | V–Belt |
| 39 | 3296–29 | 4 | Nut–Lock, NI |
| 40 | 2412–104 | 2 | R–Clamp |
| 41 | 98–3259 | 1 | Shield–Trailing |
| 42 | 322–3 | 2 | Screw–HH |
| 43 | 98–5975 | 4 | Washer–Belleville |
| 44 | 323–6 | 4 | Screw–HH |
| 45 | 1–373034 | 8 | Washer |
| ☆47 | | 2 | Wheel And Tire ASM |
| 47:1 | 1–323720 | 1 | Tire–Turfmaster |
| 47:2 | 1–323328 | 1 | Wheel And Hub ASM |
| 47:2:1 | 1–323329 | 2 | Bearing–Flanged |
| ☆47:2:2 | | 1 | Rim ASM |
| ☆47:2:3 | | 1 | Fitting–Grease |
| ☆47:2:4 | | 1 | Valve Stem |
| ☆48 | | 2 | Drum And Sheave ASM |
| 48:1 | 1–323253 | 2 | Sheave–Wheel, Drive |
| 48:2 | 1–323261 | 1 | Drum–Brake |
| 48:3 | 1–323260 | 4 | Spacer–Sheave, Wheel |
| 48:4 | 322–6 | 4 | Screw–HH |
| 49 | 3290–357 | 2 | Nut–HHF |
| 50 | 32128–20 | 2 | Nut–HF |
| 52 | 3296–39 | 8 | Nut–Lock, NI |
| 53 | 1–323287–01 | 2 | Shield–Wheel, Drive |

☆ Not serviced separately

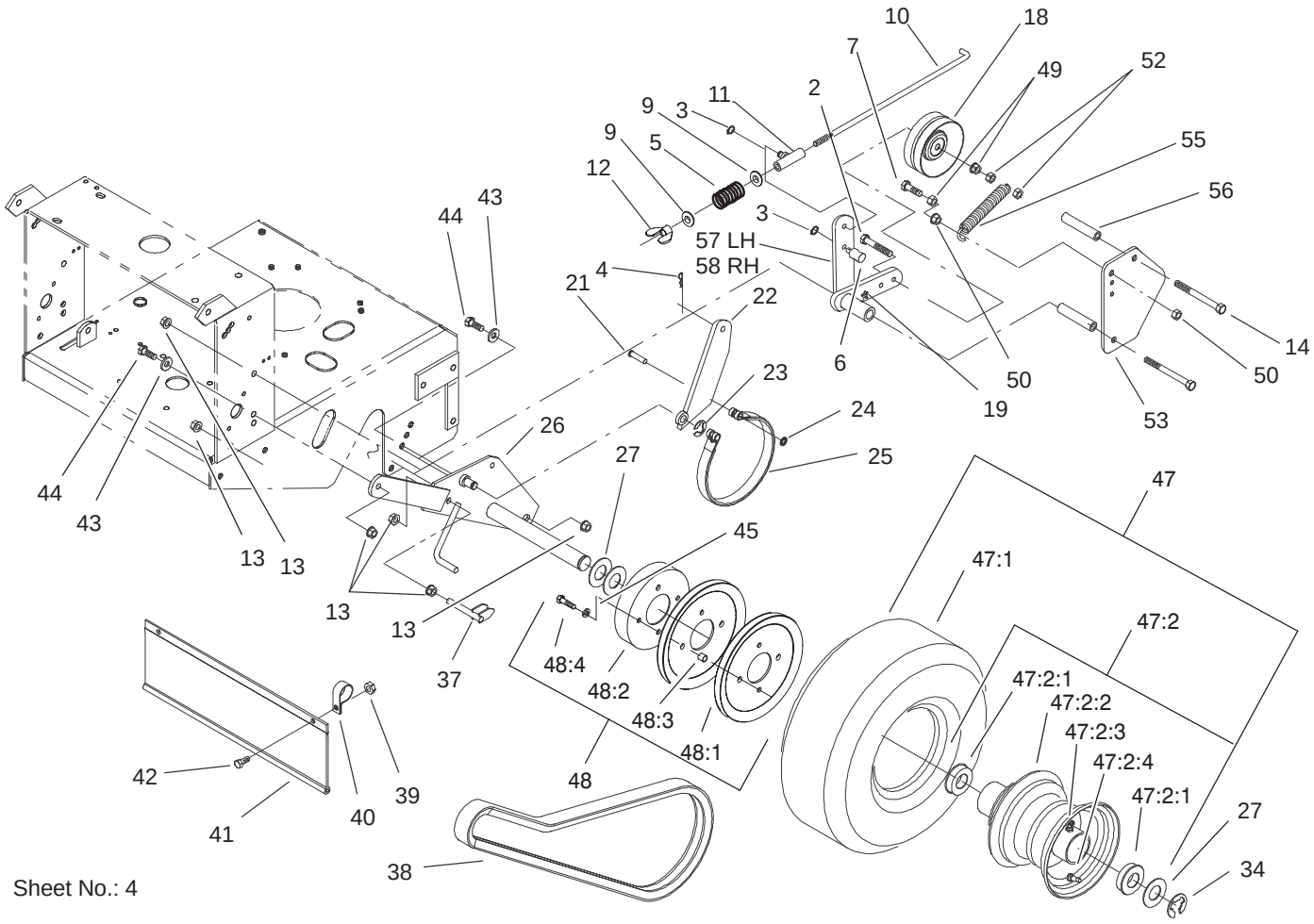


Sheet No.: 4

# Wheel Drive Assembly (Continued)

| Ref. No. | Part No. | Qty. | Description |
|---|---|---|---|
| 55 | 1–603402 | 2 | Spring–Extension |
| 56 | 1–323283 | 4 | Spacer–Shield |
| 57 | 103–1615–03 | 1 | Arm–Idler, LH |
| 58 | 103–1616–03 | 1 | Arm–Idler, RH |

| Ref. No. | Part No. | Qty. | Description |
|---|---|---|---|

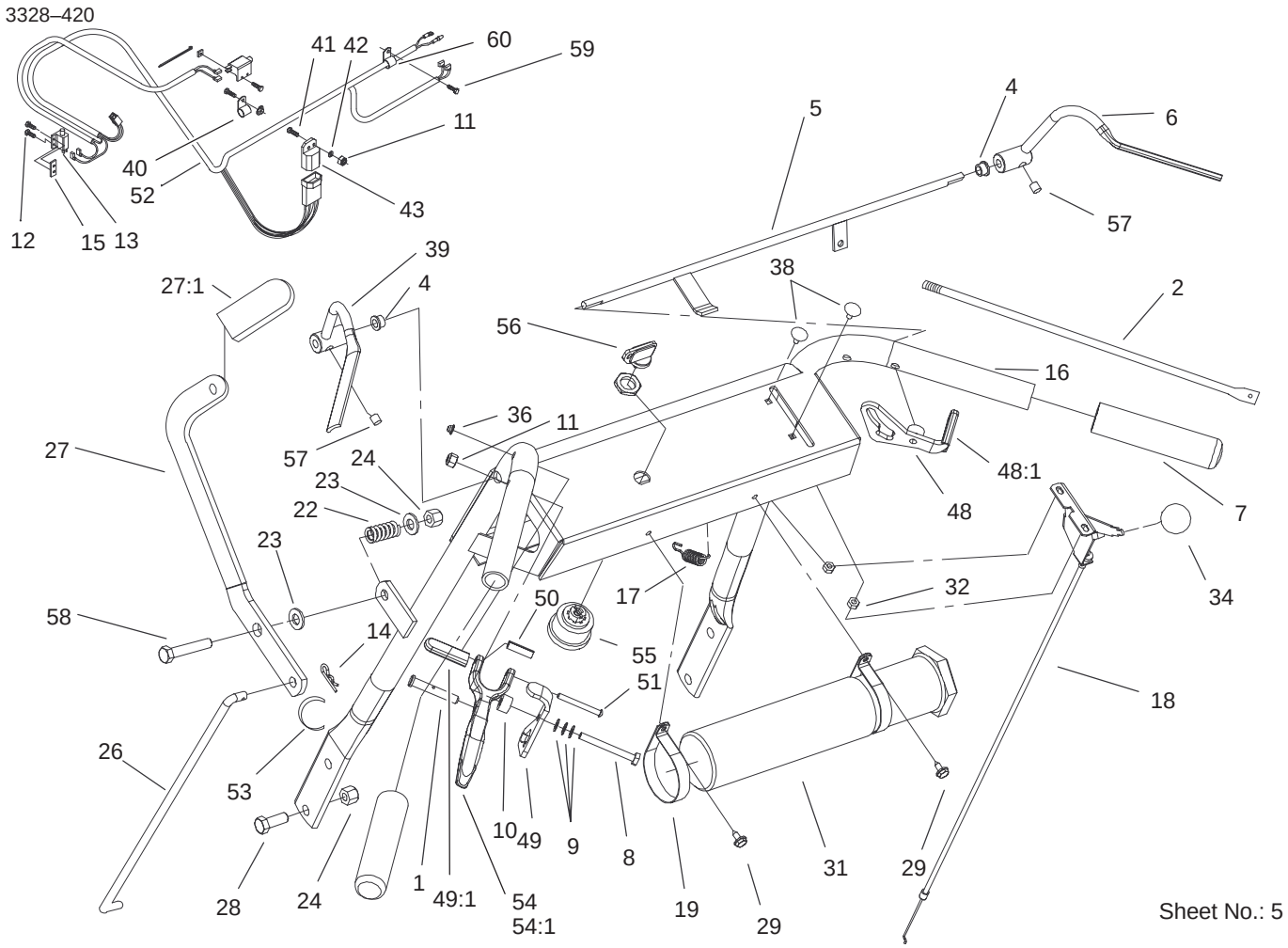


# Upper Handle Assembly

| Ref. No. | Part No. | Qty. | Description |
|---|---|---|---|
| 1 | 1–808286 | 2 | Pin–Clevis |
| 2 | 1–323359 | 2 | Linkage–Wheel, Drive |
| 4 | 1–303365 | 2 | Bushing–Nylon |
| 5 | 106–2717–03 | 1 | Operator Presence Control Rod ASM |
| 6 | 1–412185–03 | 1 | Lever–RH |
| 7 | 1–303097 | 2 | Grip–Handle |
| 8 | 321–18 | 2 | Screw–HH |
| 9 | 1–303435 | 6 | Washer–Spring |
| 10 | 1–323549 | 2 | Spacer |
| 11 | 3296–42 | 3 | Nut–Lock, NI |
| 12 | 3290–500 | 2 | Screw–PPH |
| 13 | 1–513051 | 1 | Switch–Open, Normally |
| 14 | 1–806003 | 2 | Pin–Hair |
| 15 | 1–633181 | 1 | Plate–Tapped |
| 16 | 106–2742 | 1 | Handle ASM |
| 17 | 1–303363 | 1 | Spring–Extension |
| 18 | 1–633696 | 1 | Cable–Throttle |
| 19 | 2412–120 | 2 | R–Clamp |
| 22 | 1–303160 | 1 | Spring–Compression |
| 23 | 3256–4 | 2 | Washer–Flat |
| 24 | 3296–39 | 5 | Nut–Lock, NI |
| 26 | 1–323298 | 1 | Linkage–Blade, Upper |
| 27 | 1–322157 | 1 | Lever ASM |
| 27:1 | 1–303020 | 1 | Grip–Lever |

| Ref. No. | Part No. | Qty. | Description |
|---|---|---|---|
| 28 | 323–6 | 4 | Screw–HH |
| 29 | 32104–76 | 2 | Screw |
| 31 | 74–0720 | 1 | Tube–Manual |
| 32 | 3296–2 | 2 | Nut–Lock |
| 34 | 1–513592 | 1 | Knob–Ball |
| 36 | 1–803001 | 2 | Nut |
| 38 | 1–807513 | 2 | Bolt–CARR |
| 39 | 1–412183–03 | 1 | Lever–LH |
| 40 | 1–323229 | 1 | Clip–Loom |
| 41 | 321–4 | 1 | Screw–HH |
| 42 | 3256–22 | 1 | Washer–Flat |
| 43 | 1–323430 | 1 | Module–Harness, Wiring |
| 48 | 1–324280 | 1 | RH Thumb Latch ASM |
| 48:1 | 1–303019 | 1 | Grip–Latch |
| 49 | 1–324279 | 1 | LH Thumb Latch ASM |
| 49:1 | 1–303019 | 1 | Grip–Latch |
| 50 | 1–806340 | 2 | Pin–Roll |
| 51 | 1–808250 | 2 | Pin–Clevis |
| 52 | 103–1610 | 1 | Harness,Metro Ka Wiring |
| 53 | 1–303088 | 1 | Clip–Cable |
| 54 | | 2 | Drive Lever ASM |
| 54:1 | 1–303021 | 1 | Grip–Lever, Drive |
| 55 | 1–403121 | 1 | Switch–Key |
| 56 | 63–8360 | 1 | Key–Ignition |

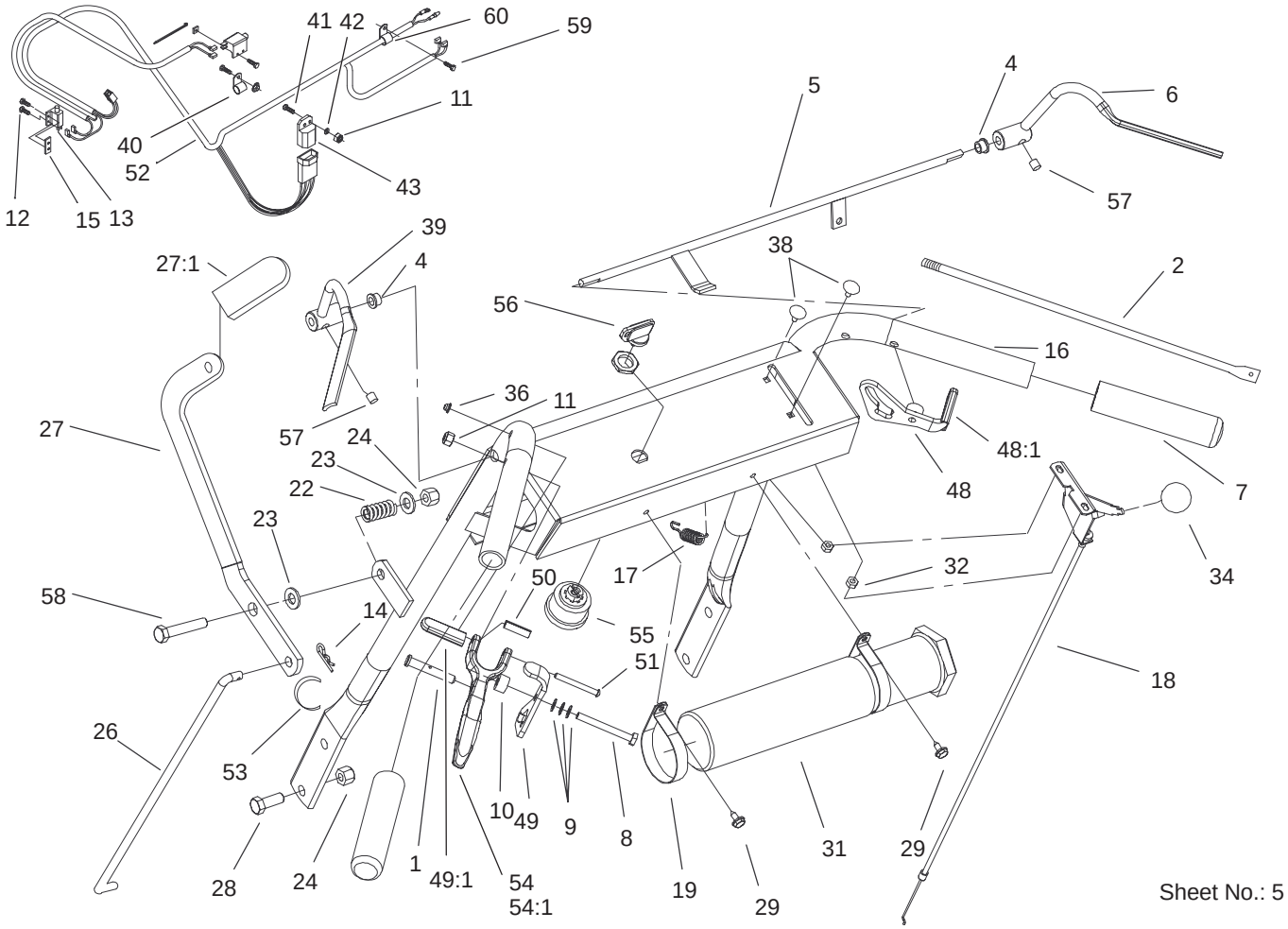


Sheet No.: 5

# Upper Handle Assembly (Continued)

| Ref. No. | Part No. | Qty. | Description |
|---|---|---|---|
| 57 | 1–803322 | 2 | Screw–Set |
| 58 | 323–10 | 1 | Screw–HH |
| 59 | 33114–016 | 1 | Screw–HH |
| 60 | 1–413510 | 1 | Clip–Loom |

| Ref. No. | Part No. | Qty. | Description |
|---|---|---|---|

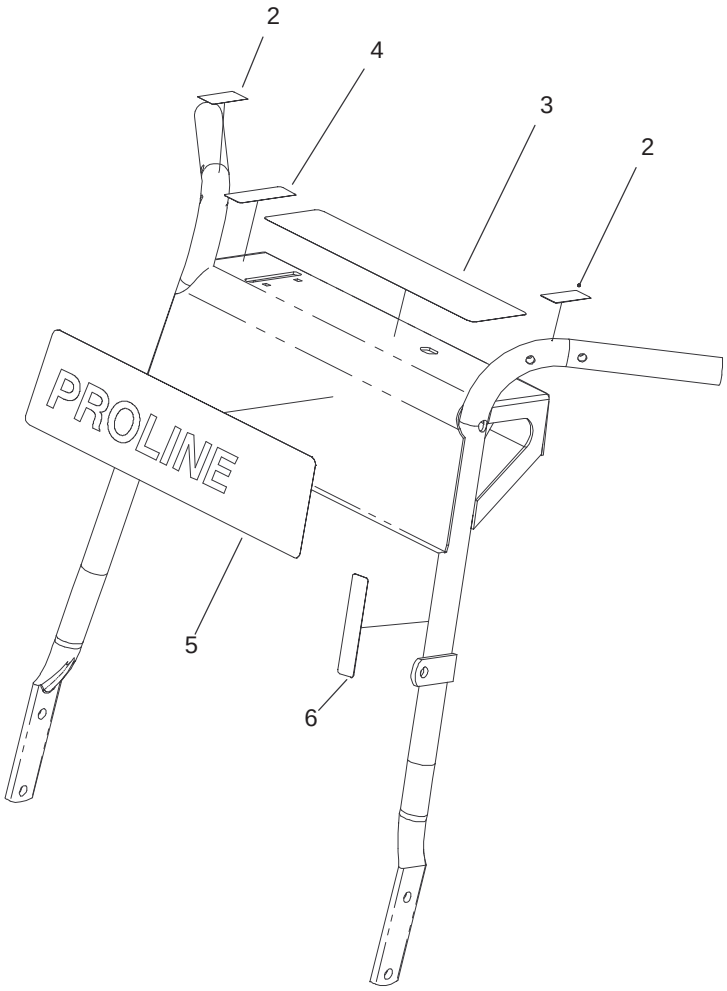


Sheet No.: A1

# Handle Assembly No. 106–2742

| Ref. No. | Part No. | Qty. | Description |
|---|---|---|---|
| 2 | 105–4111 | 2 | Decal–Lock, Neutral |
| 3 | 106–2737 | 1 | Decal – Warning |
| 4 | 106–2733 | 1 | Decal–Throttle |
| 5 | 106–2735 | 1 | Decal–Proline |
| 6 | 95–5537 | 1 | Decal–Engage, Deck |

| Ref. No. | Part No. | Qty. | Description |
|---|---|---|---|

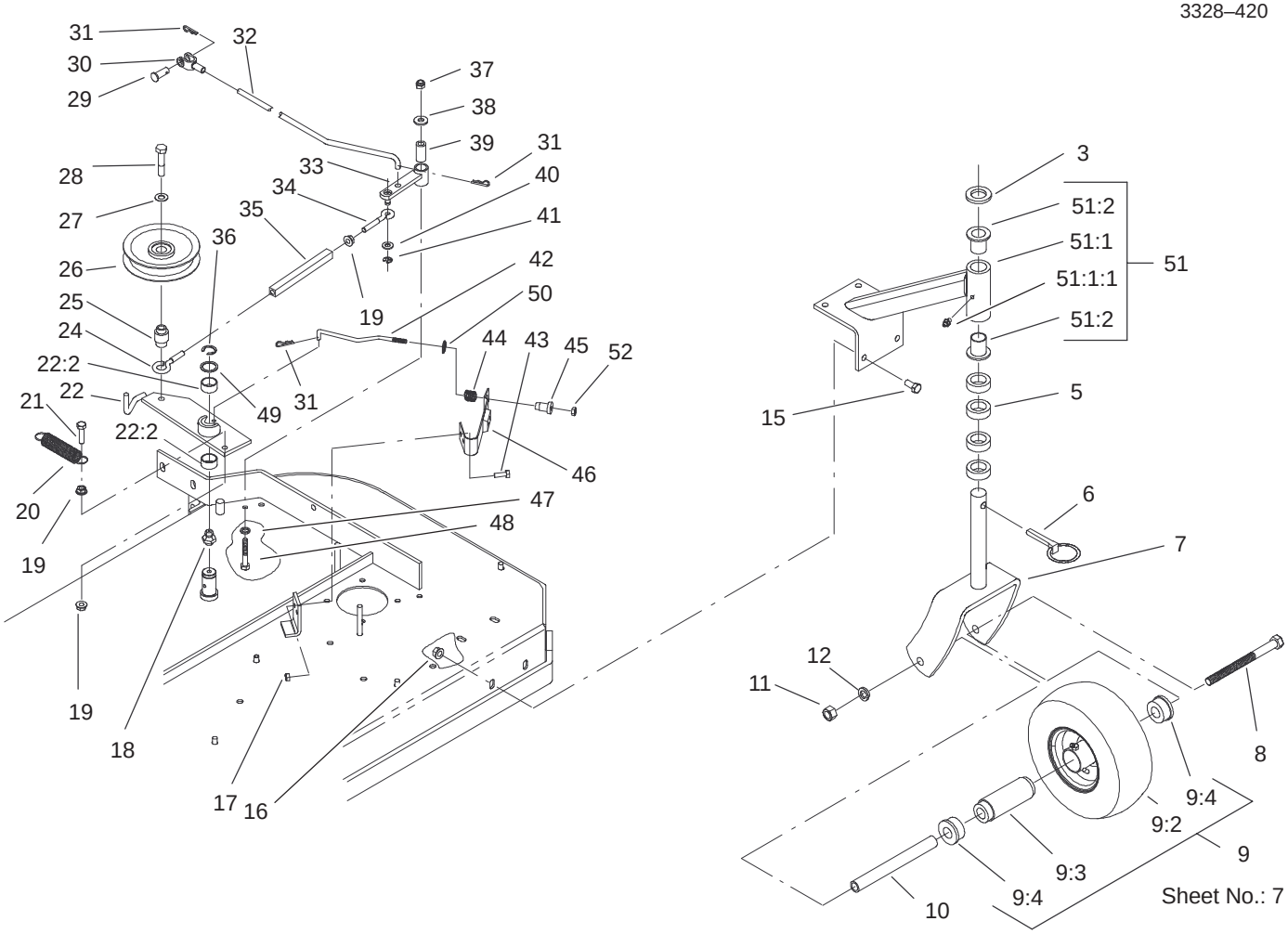


# Front Caster and Blade Brake Assembly

| Ref. No. | Part No. | Qty. | Description |
|---|---|---|---|
| 3 | 1–513338 | 2 | Washer–Flat |
| 5 | 1–303314 | 8 | Spacer–Caster |
| 6 | 1–809020 | 2 | Pin |
| 7 | 1–322145–01 | 2 | Fork |
| 8 | 325–20 | 2 | Screw–HH |
| 9 | 1–513648 | 2 | Wheel And Tire ASM |
| 9:2 | 1–513808 | 1 | Tire |
| 9:3 | 1–513809 | 1 | Bearing |
| 9:4 | 1–513810 | 2 | Bushing |
| 10 | 1–513547 | 2 | Spacer |
| 11 | 3217–9 | 2 | Nut–HH |
| 12 | 3253–7 | 2 | Washer–Lock |
| 15 | 323–4 | 8 | Screw–HH |
| 16 | 3290–357 | 8 | Nut–HHF |
| 17 | 3296–42 | 2 | Nut–Lock, NI |
| 18 | 302–19 | 1 | Fitting–Grease |
| 19 | 32128–20 | 3 | Nut–HF |
| 20 | 1–323071 | 1 | Spring–Extension |
| 21 | 322–6 | 2 | Screw–HH |
| 22 | 1–402109 | 1 | Engage Arm ASM |
| 22:2 | 1–323729 | 2 | Sleeve–Bearing |
| 24 | 1–303348 | 1 | Eyebolt–Thread, LH |
| 25 | 1–303434 | 1 | Bushing–Engagement |
| 26 | 1–603843 | 1 | Pulley–Idler |
| 27 | 98–5975 | 1 | Washer–Belleville |
| 28 | 702809 | 1 | Screw–Cap |

| Ref. No. | Part No. | Qty. | Description |
|---|---|---|---|
| 29 | 1–808280 | 1 | Pin–Clevis |
| 30 | 1–303105 | 1 | Yoke–Adjustable |
| 31 | 1–806003 | 3 | Pin–Hair |
| 32 | 1–323303 | 1 | Linkage–Arm |
| 33 | 1–322230 | 1 | Arm–Assist |
| 34 | 1–303238 | 1 | Eyebolt–Thread, RH |
| 35 | 1–303236 | 1 | Body–Turnbuckle |
| 36 | 32151–103 | 1 | Ring–Snap |
| 37 | 3296–29 | 1 | Nut–Lock, NI |
| 38 | 3256–3 | 1 | Washer–Flat |
| 39 | 1–403179 | 1 | Tube–Pivot |
| 40 | 3256–23 | 1 | Washer–Flat |
| 41 | 32120–35 | 1 | E–Ring |
| 42 | 1–323714 | 1 | Rod–Brake |
| 43 | 321–4 | 2 | Screw–HH |
| 44 | 1–323747 | 1 | Spring–Compression |
| 45 | 1–323746 | 1 | Spacer–Flanged |
| 46 | 1–324372 | 1 | Pad/Spring ASM |
| 47 | 1–303334 | 1 | Washer–Spring |
| 48 | 322–10 | 1 | Screw–HH |
| 49 | 1–303352 | 1 | Washer–Spindle |
| 50 | 1–323748 | 1 | Ring–Push On |
| 51 | 1–302203 | 2 | Support ASM |
| 51:1 | 1–302194–01 | 1 | Support–Caster |
| 51:1:1 | 302–52 | 1 | Fitting–Grease |
| 51:2 | 1–303514 | 2 | Bearing–Flanged |

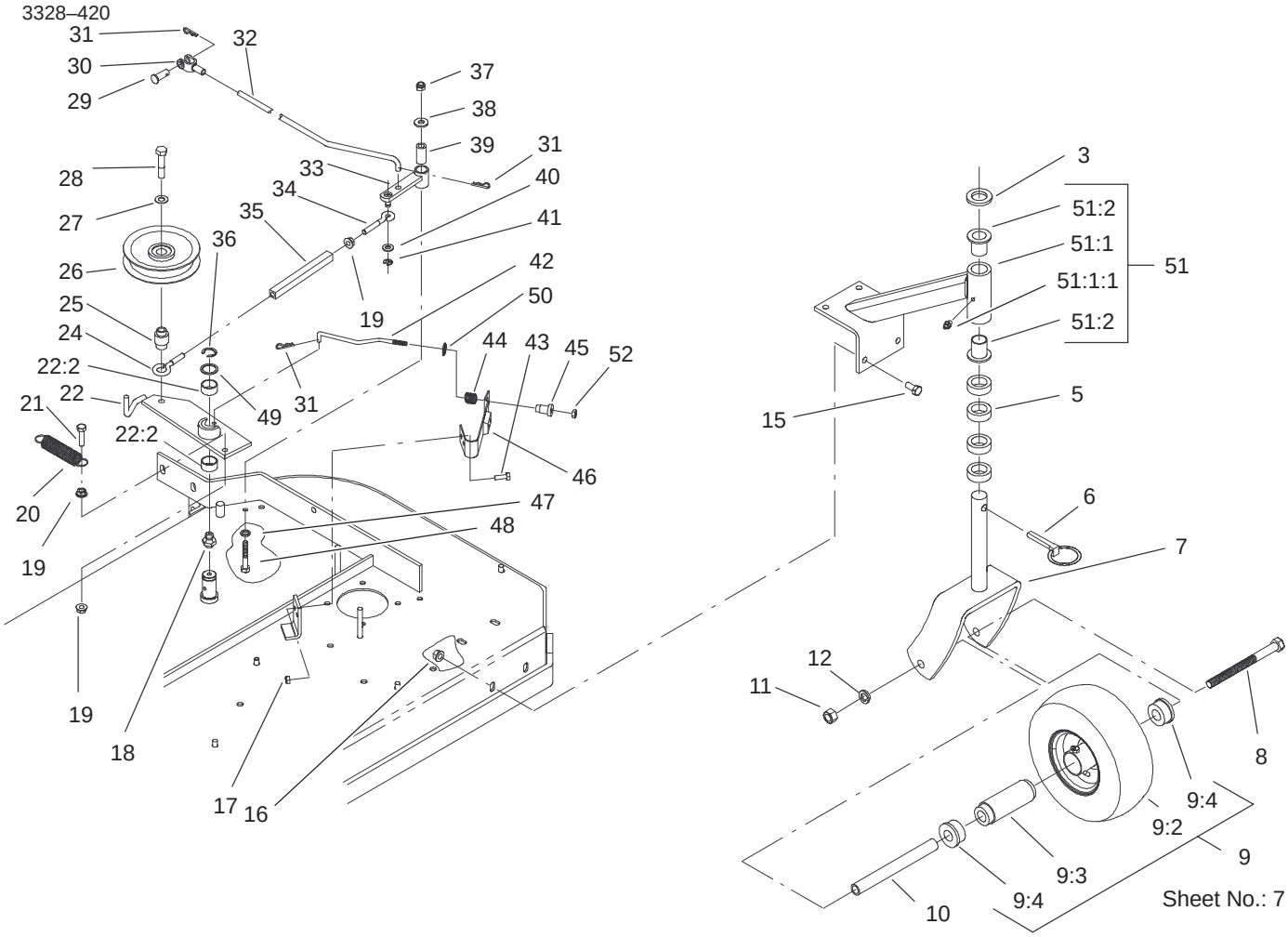


# Front Caster and Blade Brake Assembly (Continued)

| Ref. No. | Part No. | Qty. | Description |
|---|---|---|---|
| 52 | 3296–56 | 1 | Nut–Lock, NI |

| Ref. No. | Part No. | Qty. | Description |
|---|---|---|---|

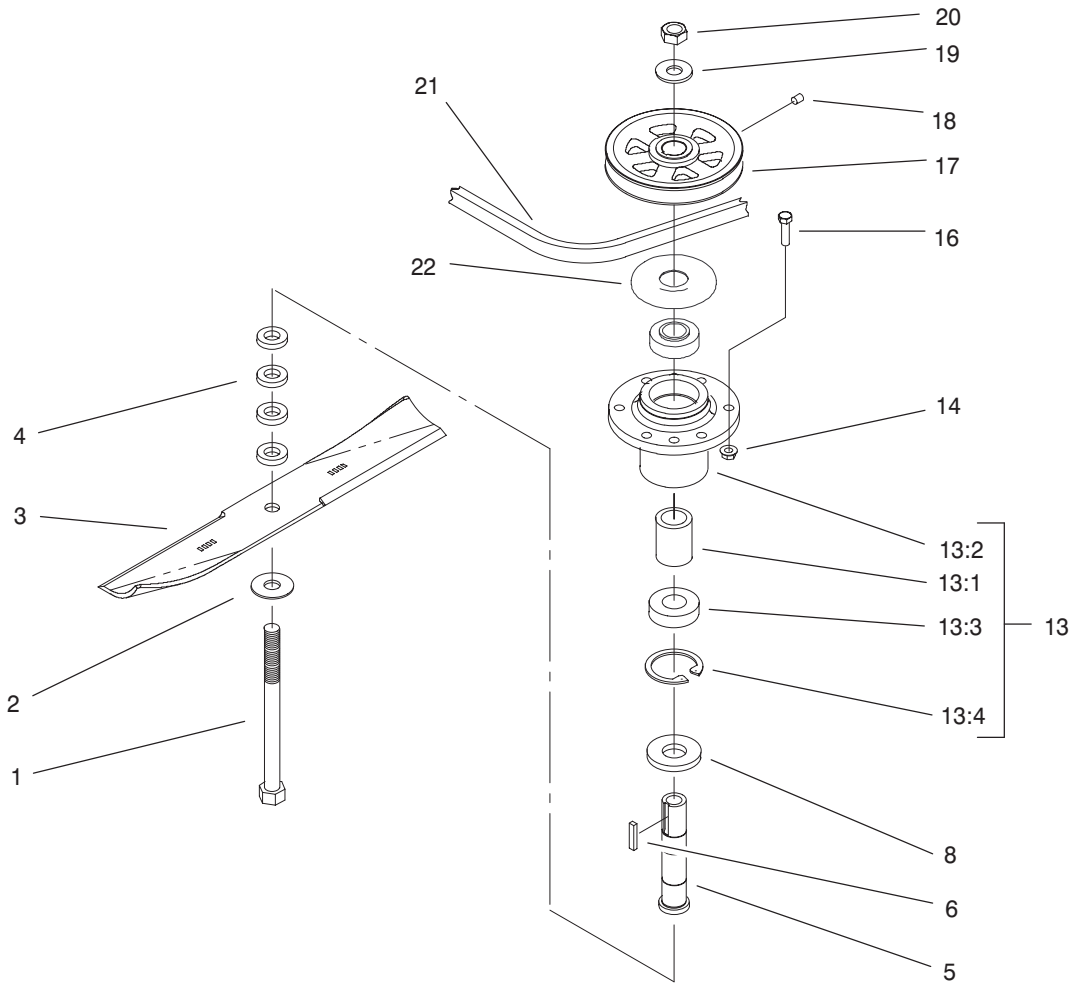


Sheet No.: 8

# Spindle Assembly

| Ref. No. | Part No. | Qty. | Description |
|---|---|---|---|
| 1 | 1–800861 | 3 | Screw–Cap, HH |
| 2 | 1–513208 | 3 | Washer–Spring |
| 3 | 103–2507 | 3 | Blade–Lift, Low |
| 3 | 103–2527 | 3 | Blade–Notched |
| 4 | 1–323539 | 12 | Spacer–Drive, Blade |
| 5 | 1–323529 | 3 | Tube–Spindle, Short |
| 6 | 1–807267 | 3 | Key |
| 8 | 103–2535 | 3 | Spacer–Guard, Bottom |
| ☆13 | | 3 | Cutter Housing ASM |
| 13:1 | 1–323532 | 1 | Housing–Spindle |
| 13:2 | 103–2477 | 2 | Bearing–Ball |
| 13:3 | 103–2534 | 1 | Spacer–Bearing |
| 13:4 | 32120–8 | 1 | Ring–Snap |
| 14 | 3296–39 | 18 | Nut–Lock, NI |
| 16 | 323–7 | 18 | Screw–HH |
| 17 | 1–403183 | 3 | Sheave |
| 18 | 1–803310 | 3 | Screw–Set |
| 19 | 1–323339 | 3 | Washer–Retainer, Sheave |
| 20 | 3219–6 | 3 | Nut–Hex |
| 21 | 1–403171 | 1 | Belt–Drive, Blade |
| 22 | 103–1330 | 3 | Guard–Bearing, Top |

| Ref. No. | Part No. | Qty. | Description |
|---|---|---|---|

☆ Not serviced separately

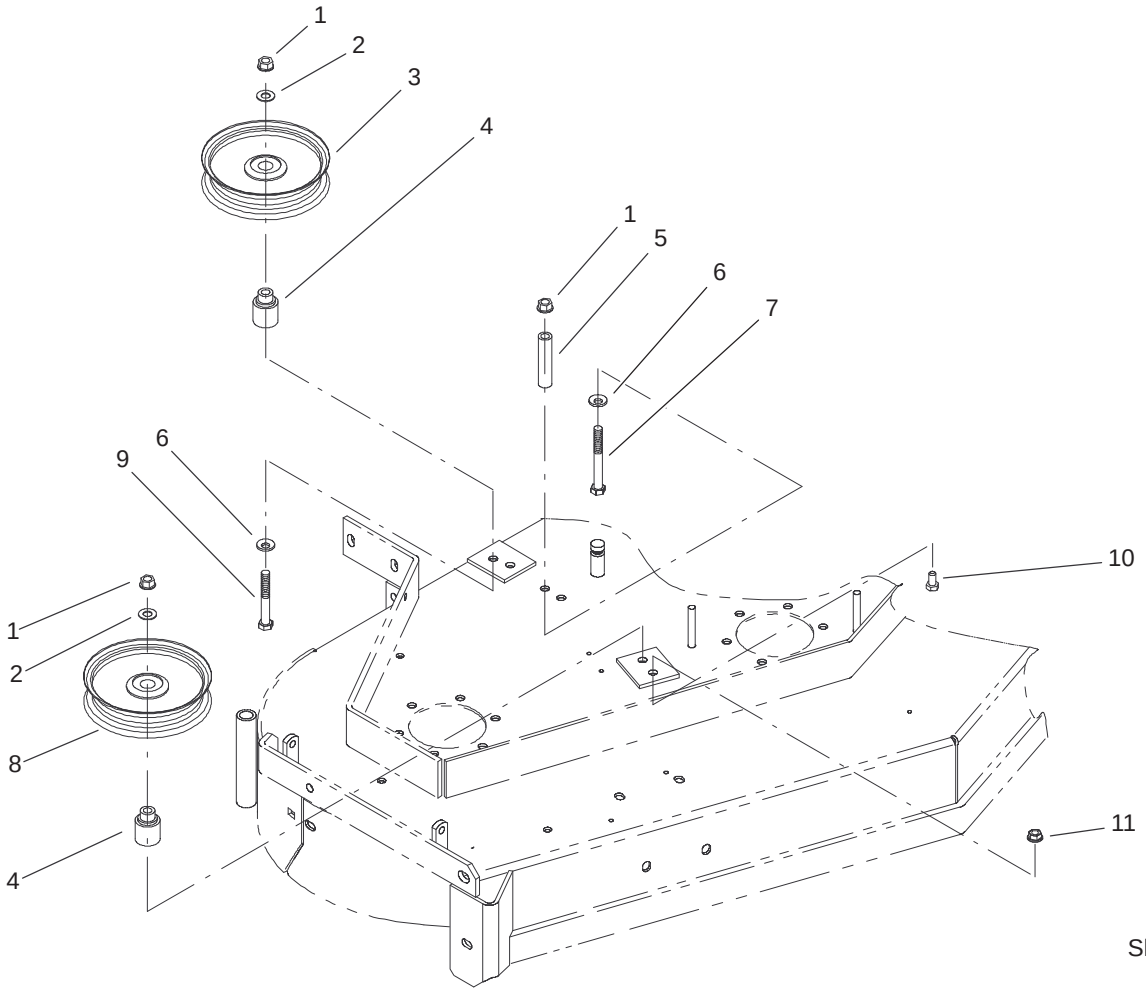


Sheet No.: 9

# Idler Pulley Assembly

| Ref. No. | Part No. | Qty. | Description |
|---|---|---|---|
| 1 | 3290–357 | 3 | Nut–HHF |
| 2 | 3256–24 | 2 | Washer–Flat |
| 3 | 1–403186 | 1 | Idler–Pulley, Flat |
| 4 | 1–403184 | 2 | Bushing–Idler |
| 5 | 1–403188 | 1 | Spacer |
| 6 | 98–5975 | 3 | Washer–Belleville |
| 7 | 323–20 | 1 | Screw–HH |
| 8 | 1–613098 | 1 | Pulley–Idler |
| 9 | 323–13 | 2 | Screw–HH |
| 10 | 322–2 | 7 | Screw–HH |
| 11 | 32128–20 | 2 | Nut–HF |

| Ref. No. | Part No. | Qty. | Description |
|---|---|---|---|

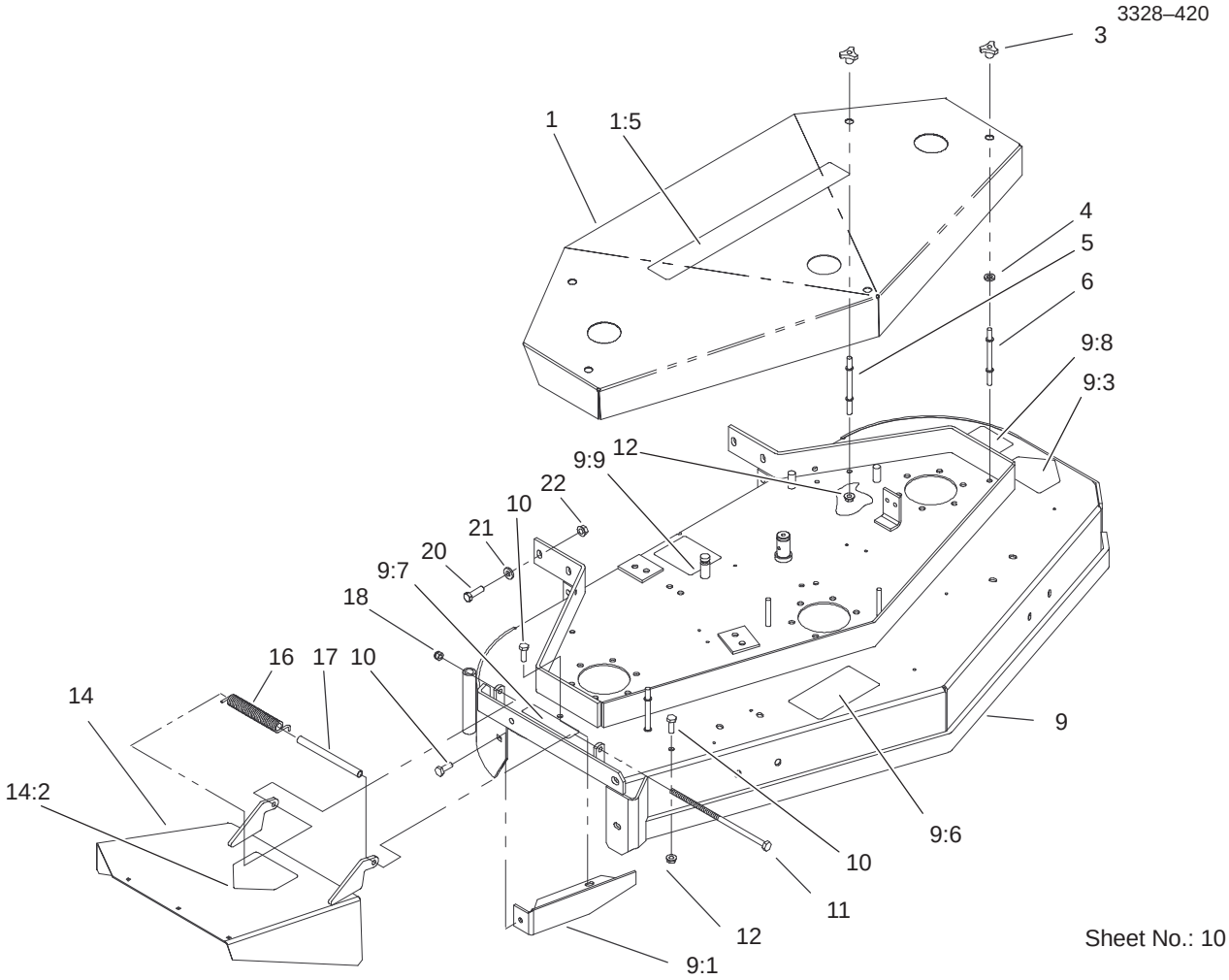


Sheet No.: 10

# Deck Assembly

| Ref. No. | Part No. | Qty. | Description |
|---|---|---|---|
| 1 | 1–404246 | 1 | Shield–Belt |
| 1:5 | 95–5512 | 1 | Decal |
| 3 | 1–323385 | 5 | Knob–3 Prong |
| 4 | 1–323417 | 5 | Washer |
| 5 | 1–303536 | 3 | Stud–Shield, Belt (Long) |
| 6 | 1–303537 | 2 | Stud–Shield, Belt (Short) |
| 9 | 1–404270 | 1 | Deck |
| 9:1 | 1–402107–01 | 1 | Baffle–Dogleg |
| 9:3 | 1–403005 | 1 | Decal–Danger |
| 9:6 | 66–1340 | 1 | Decal–Danger |
| 9:7 | 98–5954 | 1 | Decal–Missing, Cover |
| 9:8 | 98–5130 | 1 | Decal–Torque |
| 9:9 | 99–3943 | 1 | Decal–Routing, Belt |
| 10 | 322–2 | 7 | Screw–HH |
| 11 | 1–800291 | 1 | Screw–Cap HH |
| 12 | 32128–20 | 11 | Nut–HF |
| 14 | 1–404245 | 1 | Chute |
| 14:2 | 54–9220 | 1 | Decal–Danger |
| 16 | 98–3280 | 1 | Spring–Deflector |
| 17 | 1–323636 | 1 | Spacer–Spring |
| 18 | 3296–29 | 1 | Nut–Lock, NI |
| 20 | 323–8 | 6 | Screw–HH |
| 21 | 98–5975 | 6 | Washer–Belleville |
| 22 | 3290–357 | 6 | Nut–HHF |

| Ref. No. | Part No. | Qty. | Description |
|---|---|---|---|

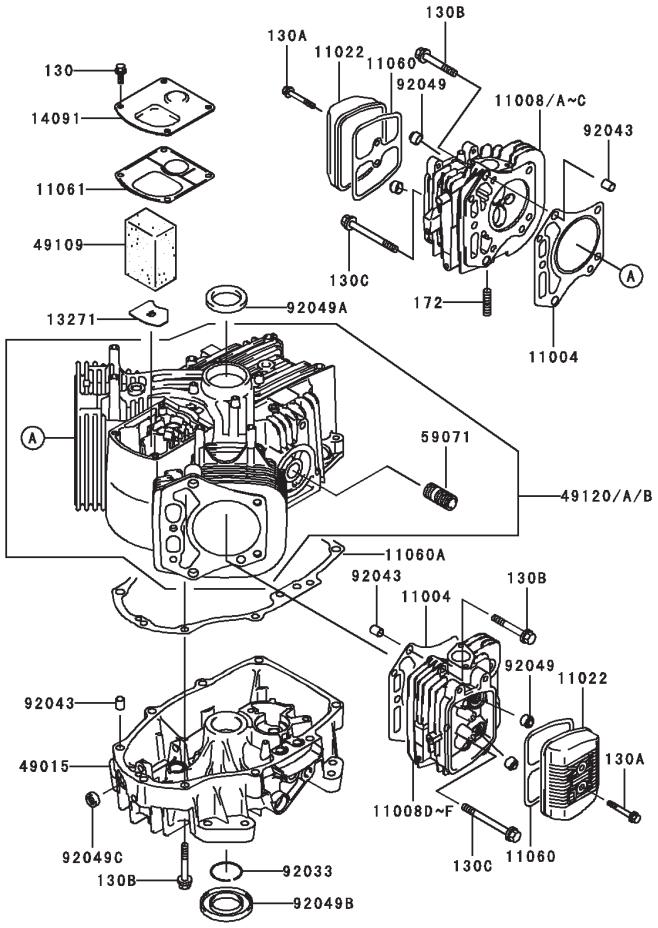


# Cylinder/Crankcase Assembly
# Kawasaki FH451V–BS04

| Ref. No. | Part No. | Qty. | Description |
|---|---|---|---|
| 11004 | 11004–7005 | 2 | Gasket–Head |
| 11008A | 11008–6042 | 1 | Head–Comp–Cylinder |
| 11008E | 11008–7009 | 1 | Head–Comp–Cylinder |
| 11022 | 11022–7003 | 2 | Case–Rocker |
| 11060 | 11060–7001 | 2 | Gasket,Rocker Case |
| 11060A | 11060–7008 | 1 | Gasket,Crankcase Cover |
| 11061 | 11061–7001 | 1 | Gasket,Breather |
| 13271 | 13271–7016 | 1 | Plate |
| 14091 | 14091–7006 | 1 | Cover |
| 49015 | 49015–6223 | 1 | Cover–Crankcase |
| 49109 | 49109–7002 | 1 | Element–Breather |
| 49120A | 49120–6132 | 1 | Crankcase–Comp |
| 59071 | 59071–2079 | 1 | Joint |
| 92033 | 92033–7003 | 1 | Ring–Snap |
| 92043 | 92043–7001 | 6 | Pin |
| 92049 | 92049–7001 | 4 | Seal–Oil |
| 92049A | 92049–7002 | 1 | Seal–Oil |
| 92049B | 92049–7004 | 1 | Seal–Oil |
| 92049C | 92049–7005 | 1 | Seal–Oil |
| 130 | 130B0612 | 4 | Bolt–Flanged |
| 130A | 130B0640 | 4 | Bolt–Flanged |
| 130B | 130T0850 | 17 | Bolt–Flanged |
| 130C | 130T0875 | 2 | Bolt–Flanged |

| Ref. No. | Part No. | Qty. | Description |
|---|---|---|---|
| 172 | 172G0818 | 4 | Bolt–Stud |

**Obtain Parts from Kawasaki**

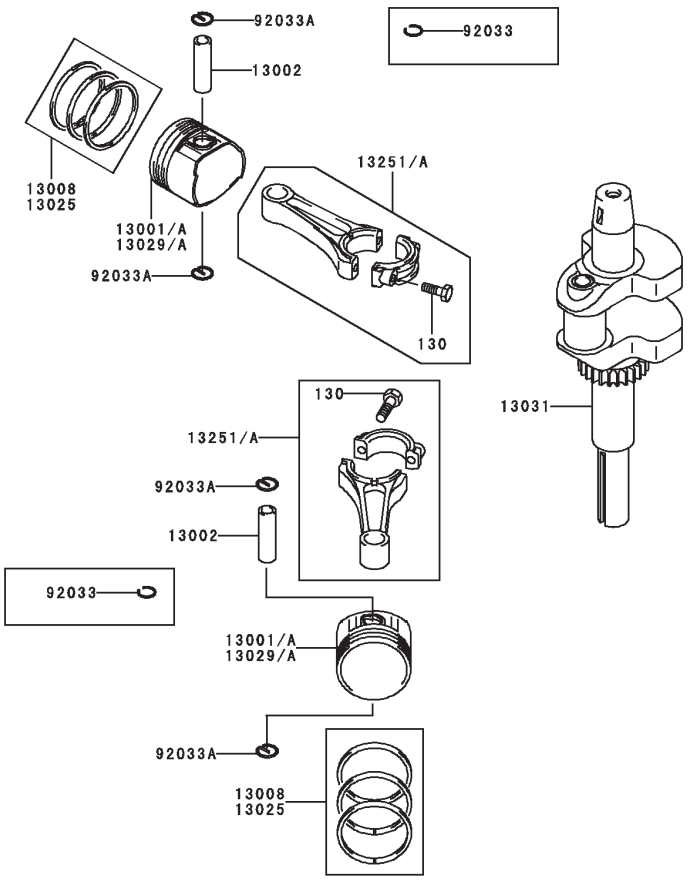


# Piston/Crankshaft Assembly
# Kawasaki FH451V–BS04

| Ref. No. | Part No. | Qty. | Description |
|---|---|---|---|
| 13001A | 13001–7008 | 2 | Piston–Engine |
| 13002 | 13002–7001 | 2 | Pin–Piston |
| 13008 | 13008–6055 | 2 | Ring–Set–Piston |
| 13025 | 13025–7001 | AR | Ring–Set–Piston L,0.50 |
| 13029A | 13029–7004 | AR | Piston–Engine L,0.50 |
| 13031 | 13031–7001 | 1 | Crankshaft–Comp |
| 13251 | 13251–7003 | AR | Rod–Assy–Connecting, U/S=0.50 |
| 13251A | 13251–7004 | 2 | Rod–Assy–Connecting |
| 92033A | 92033–7005 | 4 | Ring–Snap |
| 130 | 130G0630 | 4 | Bolt–Flanged |

| Ref. No. | Part No. | Qty. | Description |
|---|---|---|---|

**Obtain Parts from Kawasaki**

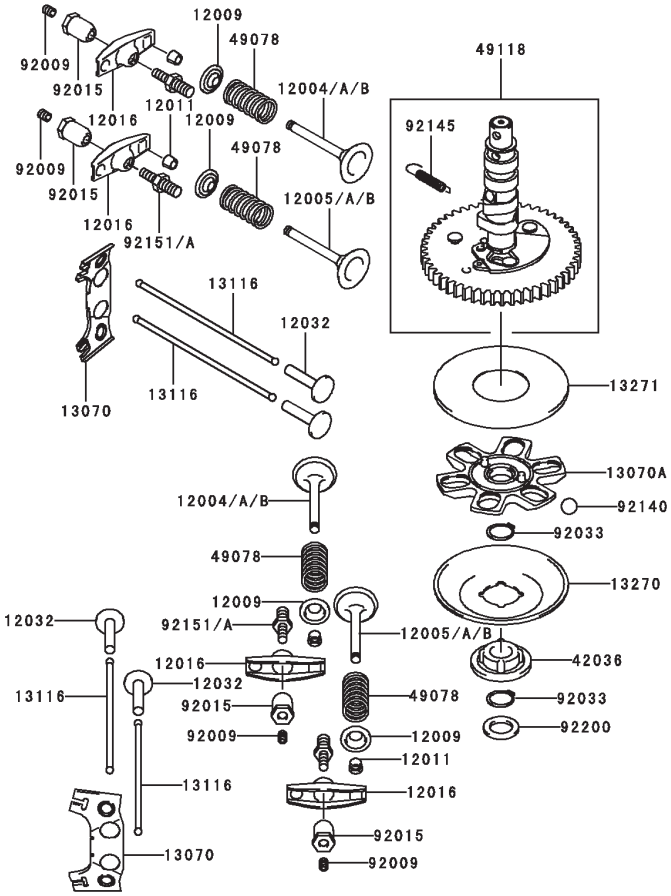


# Valve/Camshaft Assembly
# Kawasaki FH451V–BS04

| Ref. No. | Part No. | Qty. | Description |
|---|---|---|---|
| 12004A | 12004–7003 | 2 | Valve–Intake |
| 12005A | 12005–7003 | 2 | Valve–Exhaust |
| 12009 | 12009–7001 | 4 | Retainer–Valve Spring |
| 12011 | 12011–2056 | 8 | Collet |
| 12016 | 12016–7001 | 4 | Arm–Rocker |
| 12032 | 12032–7001 | 4 | Tappet |
| 13070 | 13070–7001 | 2 | Guide |
| 13070A | 13070–7004 | 1 | Guide |
| 13116 | 13116–2057 | 4 | Rod–Push |
| 13270 | 13270–7002 | 1 | Plate |
| 13271 | 13271–7007 | 1 | Plate |
| 42036 | 42036–7001 | 1 | Sleeve |
| 49078 | 49078–7001 | 4 | Spring–Engine Valve |
| 49118 | 49118–7002 | 1 | Camshaft–Comp |
| 92009 | 92009–2341 | 4 | Screw |
| 92015 | 92015–2253 | 4 | Nut |
| 92033 | 92033–7001 | 2 | Ring–Snap |
| 92140 | 92140–7002 | 6 | Ball |
| 92145 | 92145–7001 | 1 | Spring |
| 92151A | 92151–7019 | 4 | Bolt |
| 92200 | 92200–7001 | 1 | Washer |

| Ref. No. | Part No. | Qty. | Description |
|---|---|---|---|

**Obtain Parts from Kawasaki**

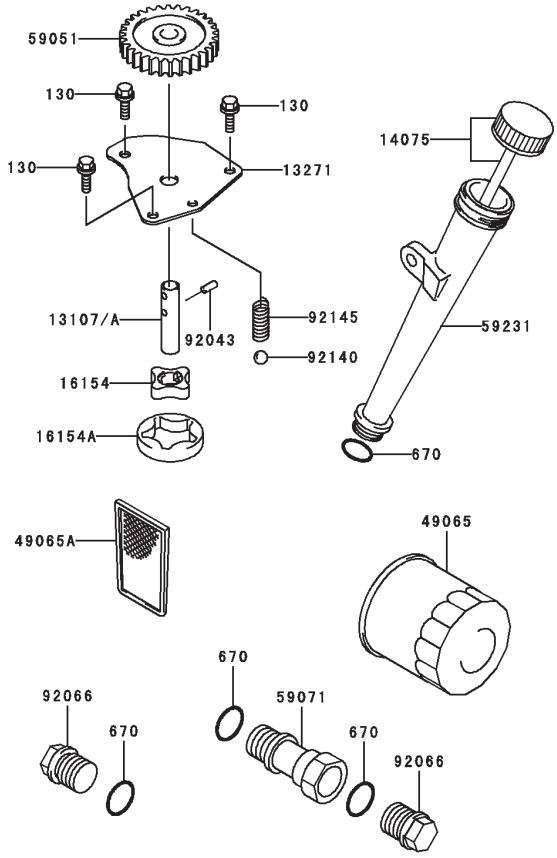


# Lubrication Equipment Assembly
# Kawasaki FH451V–BS04

| Ref. No. | Part No. | Qty. | Description |
|---|---|---|---|
| 13107A | 13107–7009 | 1 | Shaft |
| 13271 | 13271–7017 | 1 | Plate |
| 14075 | 14075–7001 | 1 | Cap–Assy |
| 16154 | 16154–2053 | 1 | Rotor–Pump,In |
| 16154A | 16154–2054 | 1 | Rotor–Pump,Out |
| 49065 | 49065–2078 | 1 | Filter–Oil |
| 49065A | 49065–7004 | 1 | Filter–Oil |
| 59051 | 59051–7004 | 1 | Gear–Spur |
| 59071 | 59071–7003 | 1 | Joint |
| 59231 | 59231–7001 | 1 | Filler |
| 92043 | 92043–7003 | 1 | Pin |
| 92066 | 92066–7003 | 2 | Plug |
| 92140 | 92140–7003 | 1 | Ball |
| 92145 | 92145–7002 | 1 | Spring |
| 130 | 130B0612 | 3 | Bolt–Flanged |
| 670 | 670D2016 | 4 | O Ring,16mm |

| Ref. No. | Part No. | Qty. | Description |
|---|---|---|---|

**Obtain Parts from Kawasaki**

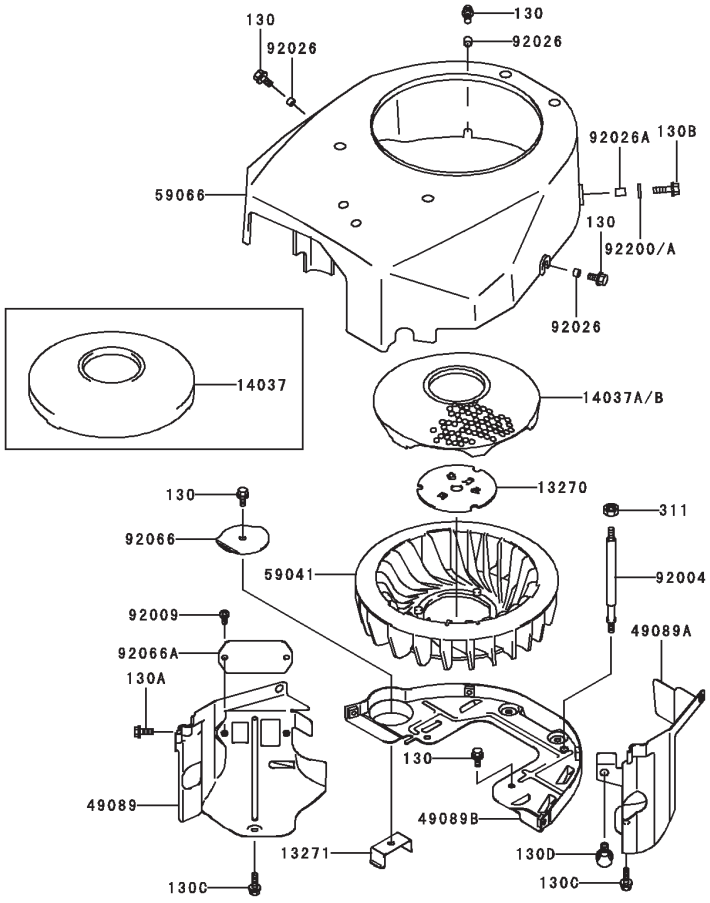


# Cooling Equipment Assembly
# Kawasaki FH451V–BS04

| Ref. No. | Part No. | Qty. | Description |
|---|---|---|---|
| 13270 | 13270–7007 | 1 | Plate |
| 13271 | 13271–7002 | 1 | Plate |
| 14037A | 14037–7015–9H | 1 | Screen |
| 49089 | 49089–7001 | 1 | Shroud–Engine |
| 49089A | 49089–7002 | 1 | Shroud–Engine |
| 49089B | 49089–7003 | 1 | Shroud–Engine |
| 59041 | 59041–7001 | 1 | Fan |
| 59066 | 59066–7002 | 1 | Housing–Fan |
| 92004 | 92004–7006 | 2 | Stud |
| 92009 | 92009–2308 | 2 | Screw |
| 92026 | 92026–7001 | 3 | Spacer,6.2x7.9x5 |
| 92026A | 92026–7003 | 1 | Spacer,6.5x7.9x10.5 |
| 92066 | 92066–7004 | 1 | Plug |
| 92066A | 92066–7005 | 1 | Plug |
| 92200 | 92200–2078 | 1 | Washer,6.5x18x2.0 |
| 130 | 130B0612 | 6 | Bolt–Flanged |
| 130A | 130B0616 | 2 | Bolt–Flanged |
| 130B | 130B0620 | 1 | Bolt–Flanged |
| 130C | 130B0625 | 2 | Bolt–Flanged |
| 130D | 130B0816 | 1 | Bolt–Flanged |
| 311 | 311B0600 | 2 | Nut–Hex |

| Ref. No. | Part No. | Qty. | Description |
|---|---|---|---|

**Obtain Parts from Kawasaki**

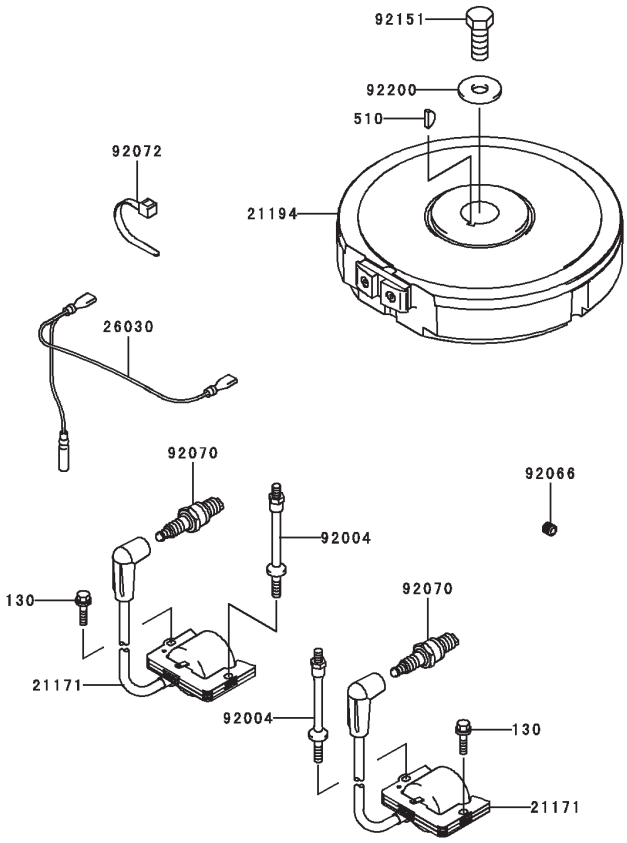


# Electric Equipment Assembly
# Kawasaki FH451V–BS04

| Ref. No. | Part No. | Qty. | Description |
|---|---|---|---|
| 21171 | 21171–7001 | 2 | Coil–Assy–Ignition |
| 21194 | 21194–7002 | 1 | Flywheel–Comp |
| 26030 | 26030–7001 | 1 | Harness |
| 92004 | 92004–2147 | 2 | Stud |
| 92066 | 92066–7002 | 1 | Plug |
| 92070 | 92070–7003 | 2 | Plug–Spark,RCJ8Y, Solid |
| 92072 | 92072–7003 | 2 | Band |
| 92151 | 92151–2097 | 1 | Bolt,12x30 |
| 92200 | 92200–7002 | 1 | Washer |
| 130 | 130B0620 | 2 | Bolt–Flanged |
| 510 | 510A5100 | 1 | Key–Woodruff |

| Ref. No. | Part No. | Qty. | Description |
|---|---|---|---|

**Obtain Parts from Kawasaki**

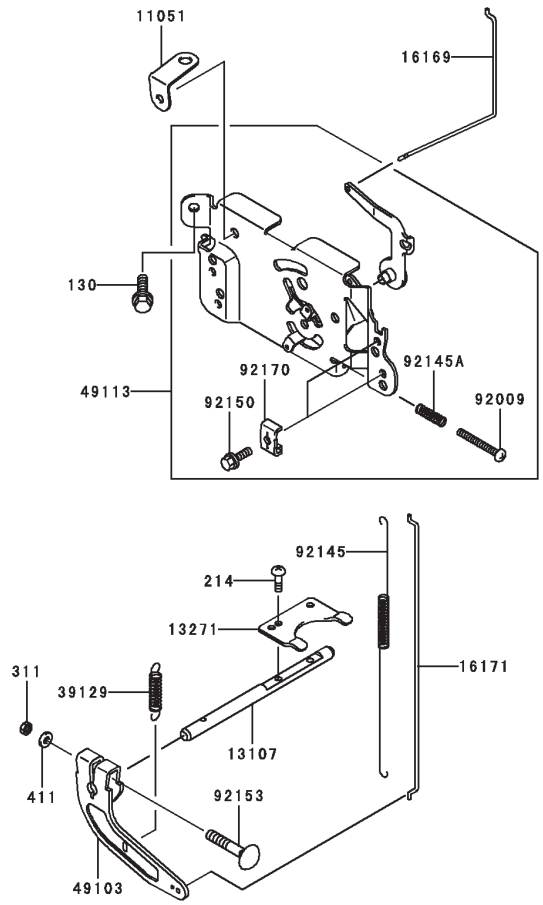


# Control Equipment Assembly
# Kawasaki FH451V–BS04

| Ref. No. | Part No. | Qty. | Description |
|---|---|---|---|
| 11051 | 11051–7008 | 1 | Bracket |
| 13107 | 13107–7010 | 1 | Shaft |
| 13271 | 13271–7018 | 1 | Plate |
| 16169 | 16169–7001 | 1 | Link–Choke |
| 16171 | 16171–7001 | 1 | Link |
| 39129 | 39129–7003 | 1 | Spring–Governor |
| 49103 | 49103–7004 | 1 | Arm–Governor |
| 49113 | 49113–7024 | 1 | Panel–Comp–Control |
| 92009 | 92009–7007 | 1 | Screw,4x35 |
| 92145 | 92145–7003 | 1 | Spring |
| 92145A | 92145–7005 | 1 | Spring |
| 92150 | 92150–2182 | 2 | Bolt,5x18 |
| 92153 | 92153–7005 | 1 | Bolt,6x35 |
| 92170 | 92170–7001 | 2 | Clamp |
| 130 | 130B0612 | 2 | Bolt–Flanged |
| 214 | 214B0408 | 2 | Screw–Pan+– |
| 311 | 311B0600 | 1 | Nut–Hex |
| 411 | 411B0600 | 1 | Washer–Plain |

| Ref. No. | Part No. | Qty. | Description |
|---|---|---|---|

**Obtain Parts from Kawasaki**

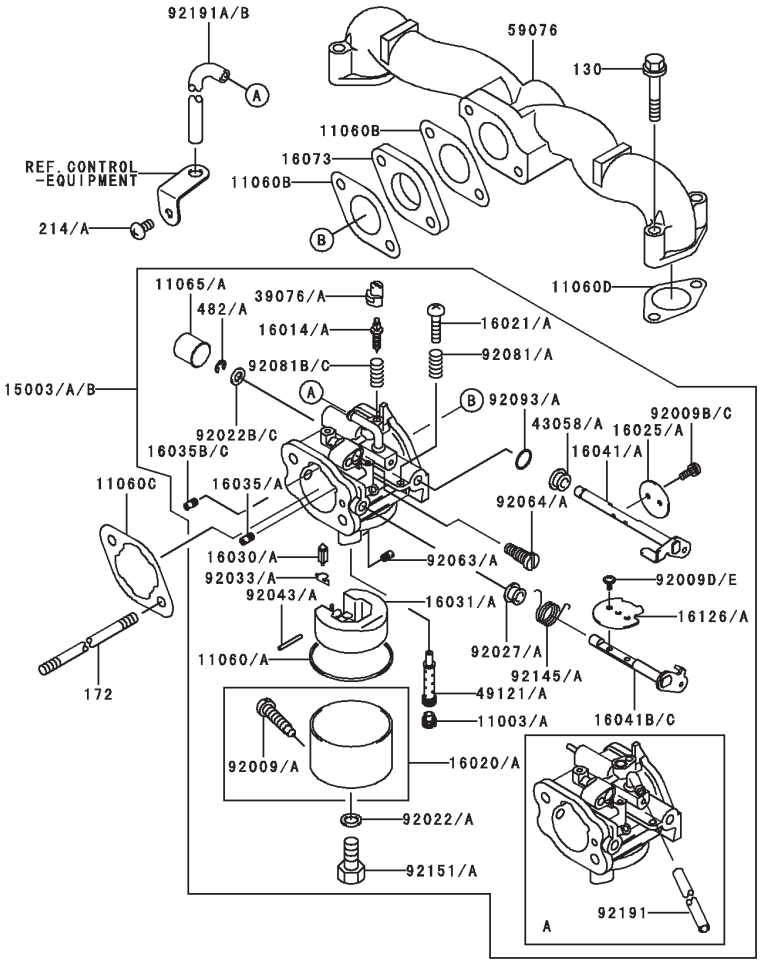


# Carburetor Assembly
# Kawasaki FH451V–BS04

| Ref. No. | Part No. | Qty. | Description |
|---|---|---|---|
| 11003 | 11003–2105 | 1 | Seat–Valve |
| 11060 | 11060–2406 | 1 | Gasket |
| 11060B | 11060–7003 | 2 | Gasket,Insurator |
| 11060C | 11060–7004 | 1 | Gasket,Air Filter |
| 11060D | 11060–7005 | 2 | Gasket,Manifold |
| 11065 | 11065–2061 | 1 | Cap |
| 15003A | 15003–7036 | 1 | Carburetor–Assy |
| 16014 | 16014–2080 | 1 | Screw–Pilot Air |
| 16020 | 16020–2141 | 1 | Chamber–Float |
| 16021 | 16021–2060 | 1 | Screw–Throttle Stop |
| 16025 | 16025–2193 | 1 | Valve–Throttle,#130 |
| 16030 | 16030–2067 | 1 | Valve–Float |
| 16031 | 16031–2066 | 1 | Float |
| 16035 | 16035–2060 | 1 | Jet–Air,#1.7 |
| 16035B | 16035–2061 | 1 | Jet–Air,#1.2 |
| 16041 | 16041–7005 | 1 | Shaft–Carburetor |
| 16041B | 16041–7006 | 1 | Shaft–Carburetor |
| 16073 | 16073–7001 | 1 | Insulator |
| 16126 | 16126–7007 | 1 | Valve |
| 39076 | 39076–2053 | 1 | Limiter |
| 43058 | 43058–3716 | 1 | Ring |
| 49121 | 49121–2222 | 1 | Nozzle–Main,#113a |
| 59076 | 59076–7001 | 1 | Manifold–Intake |
| 92009 | 92009–2015 | 1 | Screw |

| Ref. No. | Part No. | Qty. | Description |
|---|---|---|---|
| 92009B | 92009–2024 | 2 | Screw |
| 92009D | 92009–2081 | 2 | Screw |
| 92022 | 92022–2231 | 1 | Washer |
| 92022B | 92022–2239 | 1 | Washer |
| 92027 | 92027–2025 | 1 | Collar |
| 92033 | 92033–2067 | 1 | Ring–Snap |
| 92043 | 92043–2226 | 1 | Pin |
| 92063 | 92063–2358 | 1 | Jet–Main,#125 |
| 92064 | 92064–2125 | 1 | Jet–Pilot,#48.8 |
| 92081 | 92081–2009 | 1 | Spring |
| 92081B | 92081–2256 | 1 | Spring |
| 92093 | 92093–2002 | 1 | Seal |
| 92145 | 92145–2061 | 1 | Spring |
| 92151 | 92151–2092 | 1 | Bolt |
| 92191A | 92191–7016 | 1 | Tube,4.76x7.94x225 |
| 130 | 130B0635 | 4 | Bolt–Flanged |
| 172 | 172G0685 | 2 | Bolt–Stud |
| 214 | 214B0510 | 1 | Screw–Pan+– |
| 482 | 482L4000 | 1 | Circlip–Type–E |

**Obtain Parts from Kawasaki**

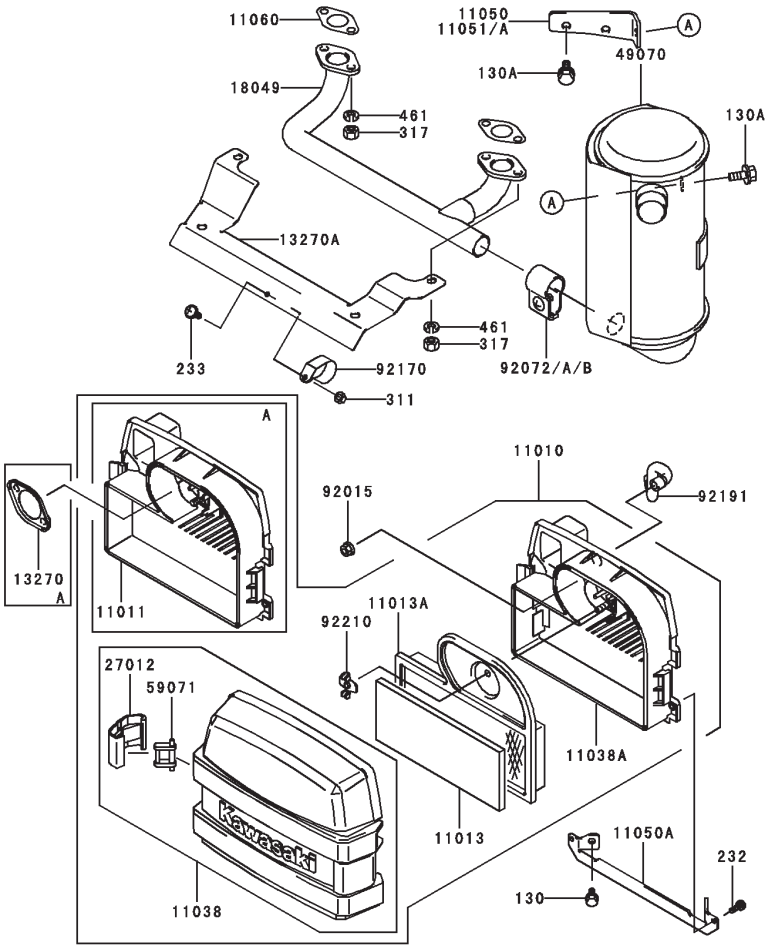


# Air Filter/Muffler Assembly
# Kawasaki FH451V–BS04

| Ref. No. | Part No. | Qty. | Description |
|---|---|---|---|
| 11010 | 11010–7001 | 1 | Filter–Assy–Air |
| 11013 | 11013–7001 | 1 | Element–Air Filter |
| 11013A | 11013–7002 | 1 | Element–Air Filter |
| 11038 | 11038–7001 | 1 | Case–Assy–Air Filter |
| 11038A | 11038–7003 | 1 | Case–Assy–Air Filter |
| 11050A | 11050–7006 | 1 | Bracket |
| 11051 | 11051–7005–9H | 1 | Bracket |
| 11060 | 11060–7021 | 2 | Gasket,Muffler |
| 13270A | 13270–7008 | 1 | Plate |
| 18049 | 18049–7001 | 1 | Pipe–Exhaust |
| 27012 | 27012–7001 | 2 | Hook,Air Filter |
| 49070 | 49070–7002 | 1 | Muffler–Comp |
| 59071 | 59071–7001 | 2 | Joint |
| 92015 | 92015–1193 | 2 | Nut |
| 92072A | 92072–7007 | 1 | Band |
| 92170 | 92170–7002 | 1 | Clamp |
| 92191 | 92191–7001 | 1 | Tube |
| 92210 | 92210–7004 | 1 | Nut |
| 130 | 130B0612 | 2 | Bolt–Flanged |
| 130A | 130B0816 | 2 | Bolt–Flanged |
| 232 | 232B0514 | 2 | Screw–Pan–WS+– |
| 233 | 233B0416 | 1 | Screw–Pan–WP+– |
| 311 | 311B0400 | 1 | Nut–Hex |
| 317 | 317R0800 | 4 | Nut–Hex–Small |

| Ref. No. | Part No. | Qty. | Description |
|---|---|---|---|
| 461 | 461F0800 | 4 | Washer–Spring |

**Obtain Parts from Kawasaki**

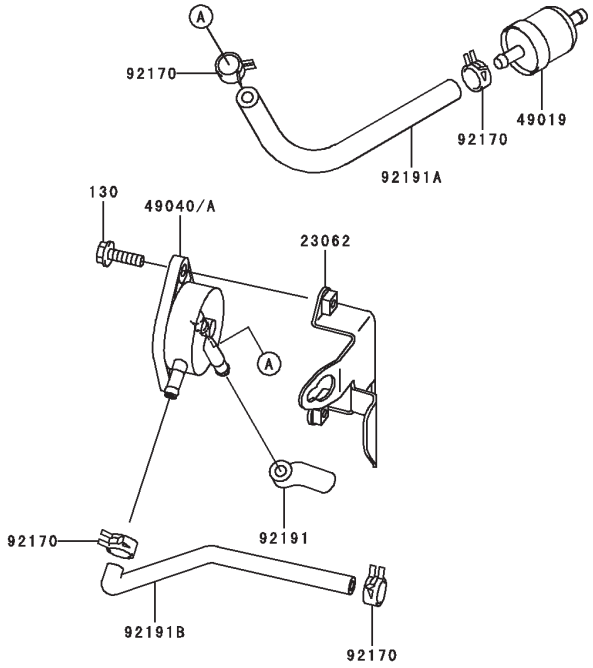


# Fuel Tank/Fuel Valve Assembly
# Kawasaki FH451V–BS04

| Ref. No. | Part No. | Qty. | Description |
|---|---|---|---|
| 23062 | 23062–7004–9H | 1 | Bracket–Comp |
| 49019 | 49019–7001 | 1 | Filter–Fuel |
| 49040A | 49040–7001 | 1 | Pump–Fuel |
| 92170 | 92170–2088 | 4 | Clamp |
| 92191 | 92191–7002 | 1 | Tube |
| 92191A | 92191–7003 | 1 | Tube,6.35x12.7x160 |
| 92191B | 92191–7004 | 1 | Tube |
| 130 | 130B0620 | 2 | Bolt–Flanged |

| Ref. No. | Part No. | Qty. | Description |
|---|---|---|---|

**Obtain Parts from Kawasaki**

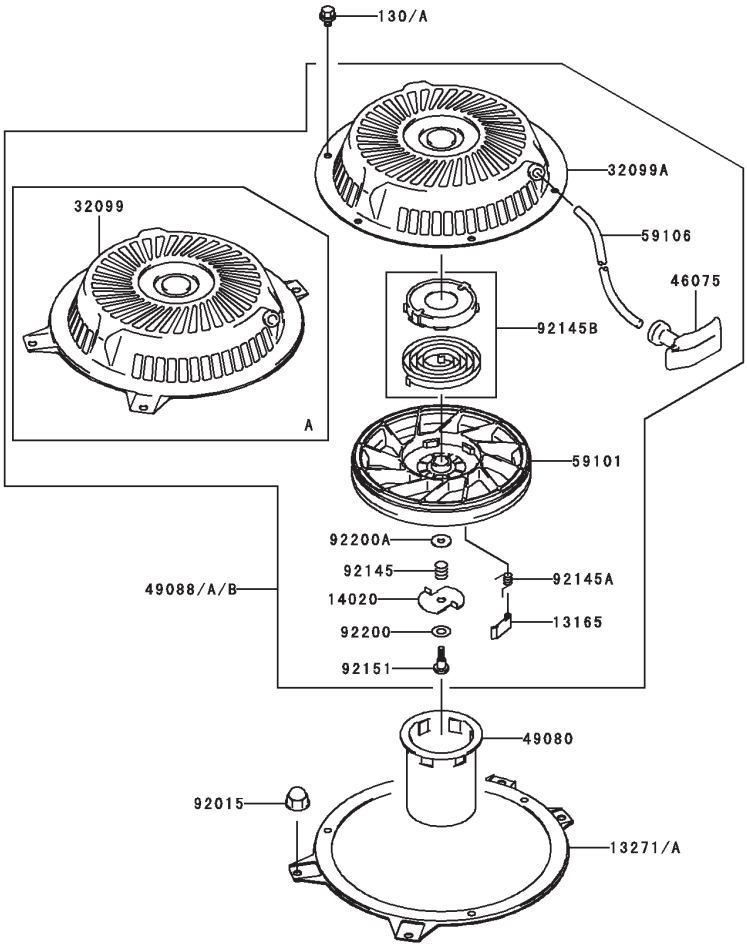


# Starter Assembly
# Kawasaki FH451V–BS04

| Ref. No. | Part No. | Qty. | Description |
|---|---|---|---|
| 13165 | 13165–7001 | 2 | Pawl,Recoil Starter |
| 13271 | 13271–7003–9H | 1 | Plate |
| 14020 | 14020–7001 | 1 | Retainer |
| 32099 | 32099–7002 | 1 | Case,Recoil Starter |
| 46075 | 46075–7001 | 1 | Grip,Recoil Starter |
| 49080 | 49080–7001 | 1 | Pulley–Starting |
| 49088 | 49088–7002 | 1 | Starter–Recoil |
| 59101 | 59101–7001 | 1 | Reel,Recoil Starter |
| 59106 | 59106–7001 | 1 | Rope |
| 92015 | 92015–1170 | 4 | Nut |
| 92145 | 92145–7006 | 1 | Spring |
| 92145A | 92145–7007 | 2 | Spring |
| 92145B | 92145–7008 | 1 | Spring |
| 92151 | 92151–7008 | 1 | Bolt |
| 92200 | 92200–7004 | 1 | Washer |
| 92200A | 92200–7005 | 1 | Washer |
| 130 | 130B0608 | 3 | Bolt–Flanged |

| Ref. No. | Part No. | Qty. | Description |
|---|---|---|---|

**Obtain Parts from Kawasaki**

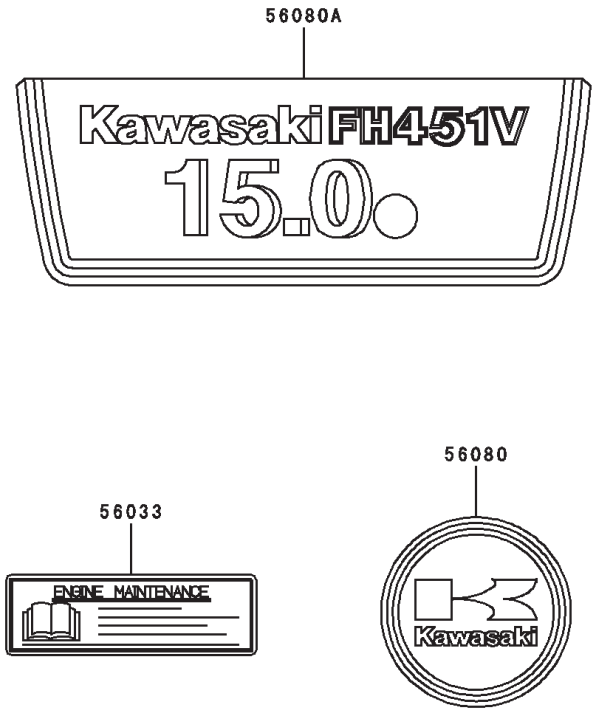


# Label Assembly
# Kawasaki FH451V–BS04

| Ref. No. | Part No. | Qty. | Description |
|---|---|---|---|
| 56033 | 56033–7001 | 1 | Label–Manual |
| 56080 | 56080–2077 | 1 | Label–Brand |
| 56080A | 56080–7010 | 1 | Label–Brand |

| Ref. No. | Part No. | Qty. | Description |
|---|---|---|---|

**Obtain Parts from Kawasaki**


TORO®