Form No. 3328–421

Greensmaster® 3150

Greensmaster Traction Unit

Model No. 04357—Serial No. 220000001 and Up

Operator’s Manual

English (EN, GB)

Warning

CALIFORNIA

Proposition 65 Warning

The engine exhaust from this product contains chemicals known to the State of California to cause cancer, birth defects, or other reproductive harm.

Important The engine in this product is not equipped with a spark arrester muffler. It is a violation of California Public Resource Code Section 4442 to use or operate this engine on any forest-covered, brush-covered, or grass-covered land as defined in CPRC 4126. Other states or federal areas may have similar laws.

This spark ignition system complies with Canadian ICES-002.

Ce système d'allumage par étincelle de véhicule est conforme à la norme NMB-002 du Canada.

Contents

	Page
Introduction	3
Safety	3
Safe Operating Practices	3
Toro Riding Mower Safety	5
Sound Pressure	6
Sound Power	6
Vibration	7
Safety and Instruction Decals	7
Specifications	10
General Specifications	10
Accessories	10
Assembly	11
Activating and Charging the Battery	12
Positioning the Seat	12
Installing the Battery	13
Installing the Cutting Units	14
Rear Ballast	16
Before Operating	16
Checking the Engine Oil	16
Filling the Gas Tank	17
Checking the Hydraulic System	18
Tire Pressure	18
Checking the Torque of the Wheel Nuts	19
Operation	19
Think Safety First	19
Controls	19
Break-in Period	21
Starting the Engine	21
Testing the Safety Interlock System	22
Checking the Leak Detector	23
Preparing the Machine for Mowing	24
Training Period	24
Before Mowing	24
Mowing Procedures	24
Leak Detector Operation	25
Transport Operation	25
Inspection and Clean-Up After Mowing	25
Towing the Traction Unit	26
Maintenance	27
Recommended Maintenance Schedule	27
Daily Maintenance Checklist	28
Lubrication	29
Removing the Seat	31
Jacking the Machine	31
Changing the Engine Oil and Filter	31
Servicing the Air Cleaner	32
Adjusting the Throttle Control	32
Adjusting the Choke Control	33
Adjusting the Carburetor and Speed Control	33
Replacing the Spark Plugs	33
Replacing the Fuel Filter	34
Changing the Hydraulic Oil and Filter	34
Checking the Hydraulic Lines and Hoses	35
Adjusting the Brakes	35
Adjusting the Transmission for Neutral	36
Adjusting the Transport Speed	36
Adjusting the Mowing Speed	37
Adjusting the Cutting Unit Lift/Drop	37
Adjusting the Lift Cylinders	37
Servicing the Battery	37
Servicing the Fuses	38
Storing the Machine	39
Electrical Schematic	40
Hydraulic Schematic	41
The Toro General Commercial Products Warranty	44

© 2002 by The Toro Company
8111 Lyndale Avenue South
Bloomington, MN 55420-1196

All Rights Reserved
Printed in the USA

Introduction

Read this manual carefully to learn how to operate and maintain your product properly. The information in this manual can help you and others avoid injury and product damage. Although Toro designs and produces safe products, you are responsible for operating the product properly and safely.

Whenever you need service, genuine Toro parts, or additional information, contact an Authorized Toro Distributor or Toro Customer Service and have the model and serial numbers of your product ready. Figure 1 illustrates the location of the model and serial numbers on the product.

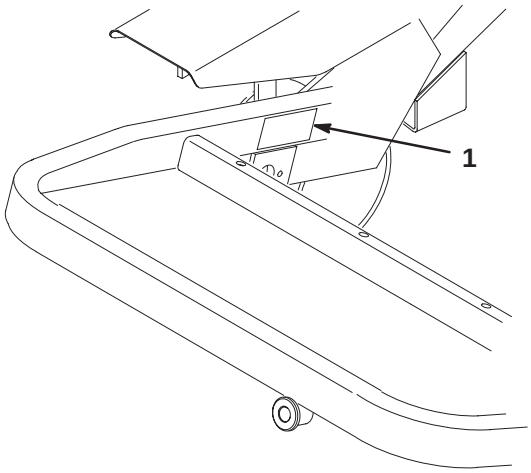

Figure 1

1. Location of the model and serial numbers

Write the product model and serial numbers in the space below:

Model No: _____

Serial No. _____

This manual identifies potential hazards and has special safety messages that help you and others avoid personal injury and even death. ***Danger***, ***Warning***, and ***Caution*** are signal words used to identify the level of hazard. However, regardless of the hazard, be extremely careful.

Danger signals an extreme hazard that *will* cause serious injury or death if you do not follow the recommended precautions.

Warning signals a hazard that *may* cause serious injury or death if you do not follow the recommended precautions.

Caution signals a hazard that may cause minor or moderate injury if you do not follow the recommended precautions.

This manual uses two other words to highlight information. **Important** calls attention to special mechanical information and **Note:** emphasizes general information worthy of special attention.

Safety

This machine meets or exceeds CEN standard EN 836:1997, ISO standard 5395:1990, and ANSI B71.4-1999 specifications in effect at the time of production when 40 lb. of ballast is added to the rear wheel.

Improper use or maintenance by the operator or owner can result in injury. To reduce the potential for injury, comply with these safety instructions and always pay attention to the safety alert ⚠ symbol, which means CAUTION, WARNING, or DANGER—"personal safety instruction." Failure to comply with the instruction may result in personal injury or death.

Safe Operating Practices

The following instructions are from the CEN standard EN 836:1997, ISO standard 5395:1990, and ANSI B71.4-1999.

Training

- Read the Operator's Manual and other training material carefully. Be familiar with the controls, safety signs, and the proper use of the equipment.
- Never allow children or people unfamiliar with these instructions to use or service the mower. Local regulations may restrict the age of the operator.
- Never mow while people, especially children, or pets are nearby.
- Keep in mind that the operator or user is responsible for accidents or hazards occurring to other people or their property.
- Do not carry passengers.
- All drivers and mechanics should seek and obtain professional and practical instruction. The owner is responsible for training the users. Such instruction should emphasize:
  - the need for care and concentration when working with ride-on machines;
  - control of a ride-on machine sliding on a slope will not be regained by the application of the brake. The main reasons for loss of control are:
    - insufficient wheel grip;
    - being driven too fast;
    - inadequate braking;

- the type of machine is unsuitable for its task;
- lack of awareness of the effect of ground conditions, especially slopes;
- incorrect hitching and load distribution.

- The owner/user can prevent and is responsible for accidents or injuries occurring to himself or herself, other people, or property.

Preparation

- While mowing, always wear substantial footwear, long trousers, hard hat, safety glasses, and ear protection. Long hair, loose clothing, or jewelry may get tangled in moving parts. Do not operate the equipment when barefoot or wearing open sandals.
- Thoroughly inspect the area where the equipment is to be used and remove all objects which may be thrown by the machine.
- **Warning**—Fuel is highly flammable. Take the following precautions:
  - Store fuel in containers specifically designed for this purpose.
  - Refuel outdoors only and do not smoke while refuelling.
  - Add fuel before starting the engine. Never remove the cap of the fuel tank or add fuel while the engine is running or when the engine is hot.
  - If fuel is spilled, do not attempt to start the engine but move the machine away from the area of spillage and avoid creating any source of ignition until fuel vapors have dissipated.
  - Replace all fuel tanks and container caps securely.
- Replace faulty silencers.
- Evaluate the terrain to determine what accessories and attachments are needed to properly and safely perform the job. Only use accessories and attachments approved by the manufacturer.
- Check that operator's presence controls, safety switches and shields are attached and functioning properly. Do not operate unless they are functioning properly.

Operation

- Do not operate the engine in a confined space where dangerous carbon monoxide fumes can collect.
- Mow only in daylight or in good artificial light.
- Before attempting to start the engine, disengage all blade attachment clutches, shift into neutral, and engage the parking brake.
- Do not use on slopes of more than
  - 5° when mowing on side hills;
  - 10° when mowing uphill;
  - 15° when mowing downhill.
- Remember there is no such thing as a safe slope. Travel on grass slopes requires particular care. To guard against overturning:
  - do not stop or start suddenly when going up or downhill;
  - engage clutch slowly, always keep machine in gear, especially when travelling downhill;
  - machine speeds should be kept low on slopes and during tight turns;
  - stay alert for humps and hollows and other hidden hazards;
  - never mow across the face of the slope, unless the mower is designed for this purpose.
- Stay alert for holes in the terrain and other hidden hazards.
- Use care when pulling loads or using heavy equipment.
  - Use only approved drawbar hitch points.
  - Limit loads to those you can safely control.
  - Do not turn sharply. Use care when reversing.
  - Use counterweight(s) or wheel weights when suggested in the owner's manual.
- Watch out for traffic when crossing or near roadways.
- Stop the blades rotating before crossing surfaces other than grass.
- When using any attachments, never direct discharge of material toward bystanders nor allow anyone near the machine while in operation.
- Never operate the machine with damaged guards, shields, or without safety protective devices in place. Be sure all interlocks are attached, adjusted properly, and functioning properly.
- Do not change the engine governor settings or overspeed the engine. Operating the engine at excessive speed may increase the hazard of personal injury.
- Before leaving the operator's position:
  - stop on level ground;
  - disengage the power take-off and lower the attachments;
  - change into neutral and set the parking brake;
  - stop the engine and remove the key.

- Disengage drive to attachments when transporting or not in use.
- Stop the engine and disengage drive to attachment
  - before refuelling;
  - before removing the grass catcher/catchers;
  - before making height adjustment unless adjustment can be made from the operator's position.
  - before clearing blockages;
  - before checking, cleaning or working on the mower;
  - after striking a foreign object or if an abnormal vibration occurs. Inspect the mower for damage and make repairs before restarting and operating the equipment.
- Reduce the throttle setting during engine run-out and, if the engine is provided with a shut-off valve, turn the fuel off at the conclusion of mowing.
- Keep hands and feet away from the cutting units.
- Look behind and down before backing up to be sure of a clear path.
- Slow down and use caution when making turns and crossing roads and sidewalks. Stop reels if not mowing.
- Do not operate the mower under the influence of alcohol or drugs
- Use care when loading or unloading the machine into a trailer or truck
- Use care when approaching blind corners, shrubs, trees, or other objects that may obscure vision.

Maintenance and Storage

- Keep all nuts, bolts and screws tight to be sure the equipment is in safe working condition.
- Never store the equipment with fuel in the tank inside a building where fumes may reach an open flame or spark.
- Allow the engine to cool before storing in any enclosure.
- To reduce the fire hazard, keep the engine, silencer, battery compartment and fuel storage area free of grass, leaves, or excessive grease.
- Check the grass catcher frequently for wear or deterioration.
- Keep all parts in good working condition and all hardware and hydraulic fittings tightened. Replace all worn or damaged parts and decals.
- If the fuel tank has to be drained, do this outdoors.
- Be careful during adjustment of the machine to prevent entrapment of the fingers between moving blades and fixed parts of the machine.
- On multi-reel machines, take care as rotating one reel can cause other reels to rotate.
- Disengage drives, lower the cutting units, set parking brake, stop engine and remove key and disconnect spark plug wire. Wait for all movement to stop before adjusting, cleaning or repairing.
- Clean grass and debris from cutting units, drives, mufflers, and engine to help prevent fires. Clean up oil or fuel spillage.
- Use jack stands to support components when required.
- Carefully release pressure from components with stored energy.
- Disconnect battery and remove spark plug wire before making any repairs. Disconnect the negative terminal first and the positive last. Reconnect positive first and negative last.
- Use care when checking the reels. Wear gloves and use caution when servicing them.
- Keep hands and feet away from moving parts. If possible, do not make adjustments with the engine running.
- Charge batteries in an open well ventilated area, away from spark and flames. Unplug charger before connecting or disconnecting from battery. Wear protective clothing and use insulated tools.

Toro Riding Mower Safety

The following list contains safety information specific to Toro products or other safety information that you must know that is not included in the CEN, ISO, or ANSI standard.

This product is capable of amputating hands and feet and throwing objects. Always follow all safety instructions to avoid serious injury or death.

Use of this product for purposes other than its intended use could prove dangerous to user and bystanders.

- Know how to stop the engine quickly.
- Do not operate the machine while wearing tennis shoes or sneakers.
- Wearing safety shoes and long pants is advisable and required by some local ordinances and insurance regulations.
- The operator must be skilled and trained in how to drive on hillsides. Failure to use caution on slopes or hills may cause loss of control and cause the vehicle to top or roll, possibly resulting in personal injury or death.

- Handle gasoline carefully. Wipe up any spills.
- Check the safety interlock switches daily for proper operation. If a switch should fail, replace the switch before operating the machine. After every two years, replace all four interlock switches in the safety system, **regardless** if they are working properly or not.
- Before starting the engine, sit on the seat, depress the lift pedal, and release it to ensure that the cutting units are disengaged. Verify that the traction system is in neutral and the parking brake is set.
- Using the machine demands attention. To prevent loss of control:
  - Do not drive close to sand traps, ditches, creeks, or other hazards.
  - Reduce speed when making sharp turns. Avoid sudden stops and starts.
  - When near or crossing roads, always yield the right-of-way.
  - Apply the service brakes when going downhill to keep forward speed slow and to maintain control of the machine.
- The grass baskets must be in place during operation of the reels or thatchers for maximum safety. Shut the engine off before emptying the baskets.
- Raise the cutting units when driving from one work area to another.
- Do not touch the engine, muffler, or exhaust pipe while the engine is running or soon after it has stopped because these areas could be hot enough to cause burns.
- Stay clear of the rotating screen at the side of the engine to prevent direct contact with your body or clothing.
- If the engine stalls or loses headway and cannot make it to the top of a slope, do not turn the machine around. Always back slowly, straight down the slope.
- When a person or pet appears unexpectedly in or near the mowing area, **stop mowing.** Careless operation, combined with terrain angles, ricochets, or improperly positioned guards can lead to thrown object injuries. Do not resume mowing until the area is cleared.
- Before getting off of the seat, move the functional control lever to neutral (N), raise the cutting units and wait for the reels to stop spinning. Set the parking brake. Stop the engine and remove the key from the ignition switch.
- Whenever the machine is left unattended, make sure that the cutting units are fully raised and the reels are not spinning, the key is removed from the ignition switch, and the parking brake is set.

Maintenance and Storage

- Make sure all hydraulic line connectors are tight and all hydraulic hoses and lines are in good condition before applying pressure to the system.
- Keep your body and hands away from pin hole leaks or nozzles that eject hydraulic fluid under high pressure. Use paper or cardboard, not your hands, to search for leaks. Hydraulic fluid escaping under pressure can have sufficient force to penetrate the skin and cause serious injury.
- Before disconnecting or performing any work on the hydraulic system, all pressure in the system must be relieved by stopping the engine and lowering the cutting units and attachments to the ground.
- Check all fuel lines for tightness and wear on a regular basis. Tighten or repair them as needed.
- If the engine must be running to perform a maintenance adjustment, keep hands, feet, clothing, and any parts of the body away from the cutting units, attachments, and any moving parts, especially the screen at the side of the engine. Keep everyone away.
- The engine must be shut off before checking the oil or adding oil to the crankcase.
- To ensure safety and accuracy, have an Authorized Toro Distributor check the maximum engine speed with a tachometer. Maximum governed engine speed should be 2900 RPM.
- If major repairs are ever needed or if assistance is desired, contact an Authorized Toro Distributor.
- Use only Toro-approved attachments and replacement parts. The warranty may be voided if used with unapproved attachments.

Sound Pressure

This unit has a maximum sound pressure level at the operator’s ear of 84 dBA, based on measurements of identical machines per Directive 98/37/EC.

Sound Power

This unit has a guaranteed sound power level of 105 dBA, based on measurements of identical machines per Directive 2000/14/EC.

Vibration

This unit does not exceed a hand/arm vibration level of 2.5 m/s^2, based on measurements of identical machines per Directive 98/37/EC.

This unit does not exceed a whole body vibration level of 0.5 m/s^2, based on measurements of identical machines per Directive 98/37/EC.

Safety and Instruction Decals

Safety decals and instructions are easily visible to the operator and are located near any area of potential danger. Replace any decal that is damaged or lost.

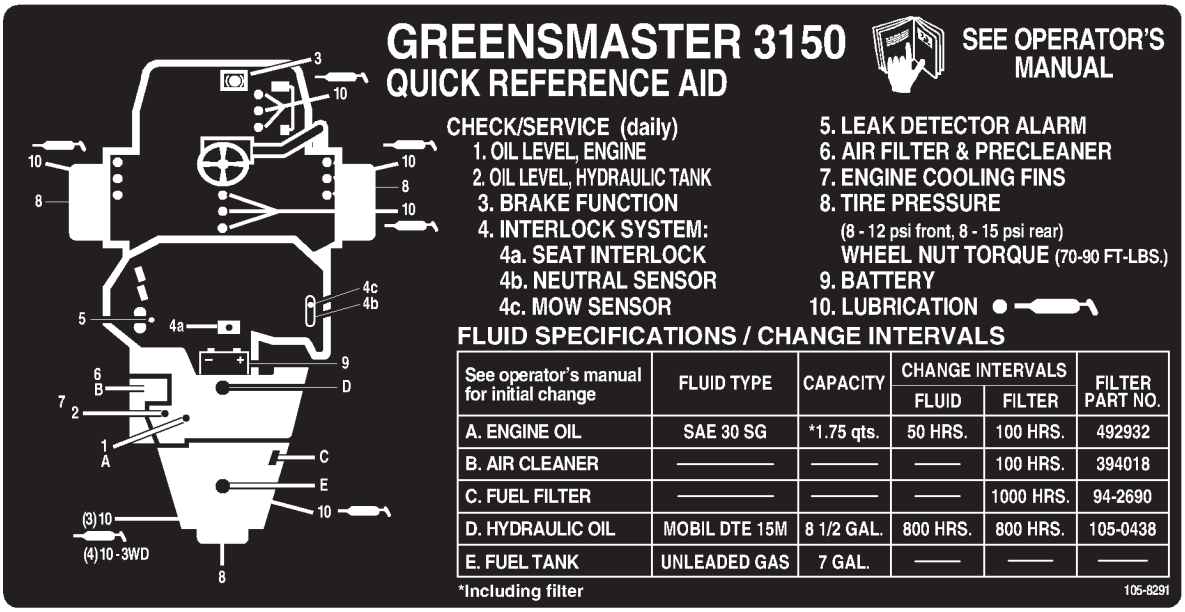

See operator's manual for initial change	FLUID TYPE	CAPACITY	CHANGE INTERVALS		FILTER PART NO.
			FLUID	FILTER	
A. ENGINE OIL	SAE 30 SG	*1.75 qts.	50 HRS.	100 HRS.	492932
B. AIR CLEANER	——	——	——	100 HRS.	394018
C. FUEL FILTER	——	——	——	1000 HRS.	94-2690
D. HYDRAULIC OIL	MOBIL DTE 15M	8 1/2 GAL.	800 HRS.	800 HRS.	105-0438
E. FUEL TANK	UNLEADED GAS	7 GAL.	——	——	——

*Including filter

105-8291

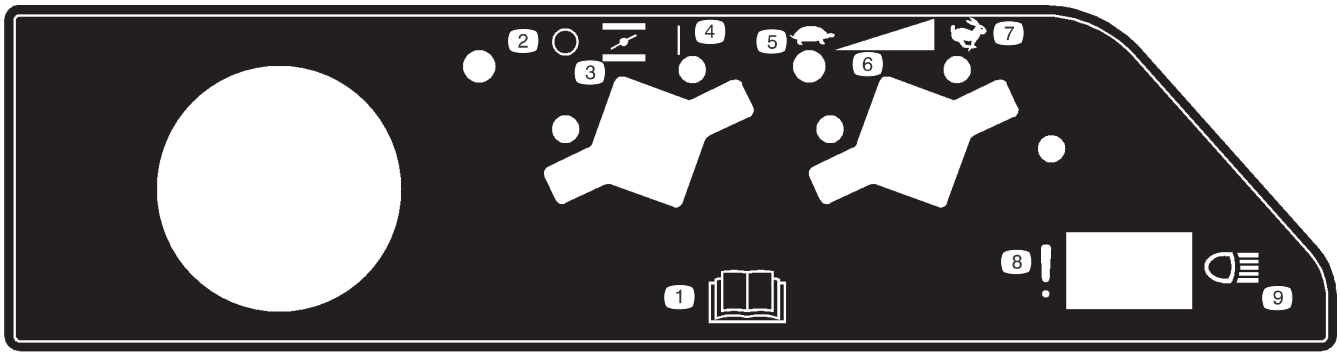

105-5471

1. Read the *Operator's Manual.*
2. Off
3. Choke
4. On
5. Slow
6. Continuous variable setting
7. Fast
8. Failure/malfunction (Leak detector alarm test)
9. Headlights

93-8067

1. Hydraulic oil
2. Read the *Operator's Manual.*

62–5070

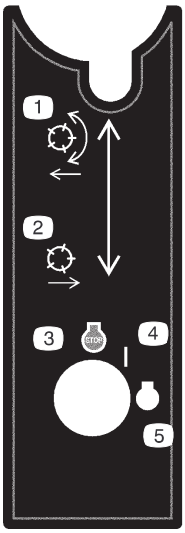

105-8305

1. Lower and engage the reels.
2. Raise and disengage the reels.
3. Engine—stop
4. On
5. Engine—start

93-9051

1. Read the *Operator's Manual.*

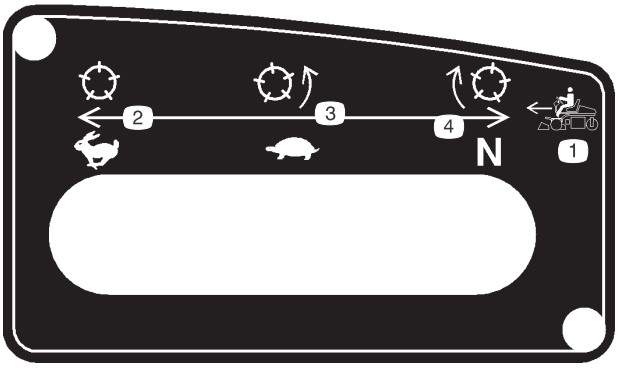

105-8306

1. Forward machine speeds.
2. Fast—use for transport.
3. Slow—use for mowing.
4. Neutral—use for backlapping.

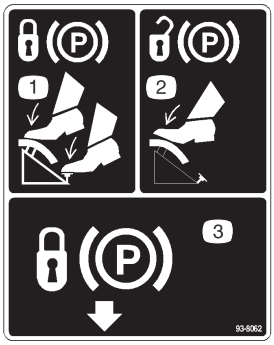

93-8062

1. To lock the parking brake, press the brake pedal and the parking brake lock.
2. To unlock the parking brake, press the brake pedal.
3. Parking brake lock

104-2053

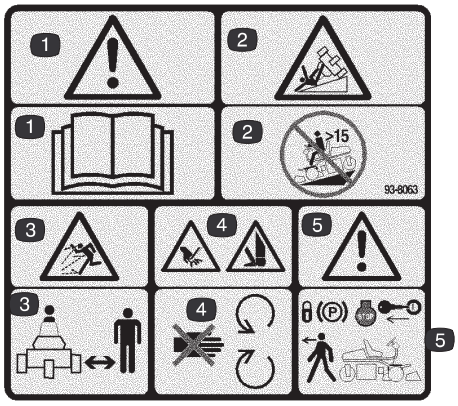

93-8063 (for CE)

1. Warning—read the *Operator's Manual.*
2. Tipping hazard—do not use the machine on a slope greater than 15 degrees.
3. Thrown object hazard—stay a safe distance from the machine.
4. Cutting hazard of hand or foot—stay away from moving parts.
5. Warning—lock the parking brake, stop the engine, and remove the ignition key before leaving the machine.

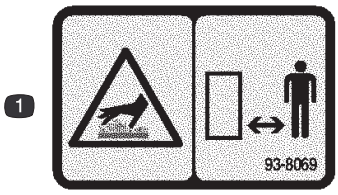

93-8069

1. Hot surface/burn hazard—stay a safe distance from the hot surface.

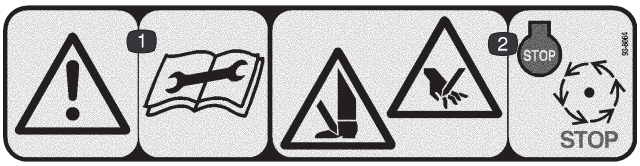

93-8064 (for CE)

1. Warning—read the instructions before servicing or performing maintenance.
2. Cutting hazard of foot or hand—stop the engine and wait for moving parts to stop.

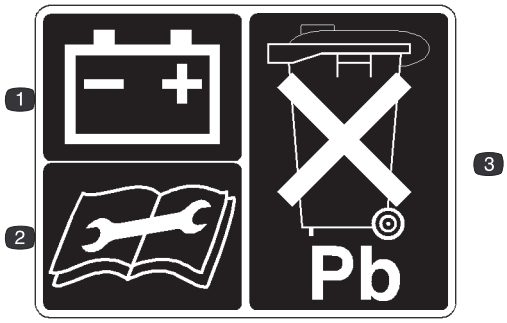

93-6668

1. Battery
2. Read the instructions before servicing or performing maintenance.
3. Contains lead; do not discard.

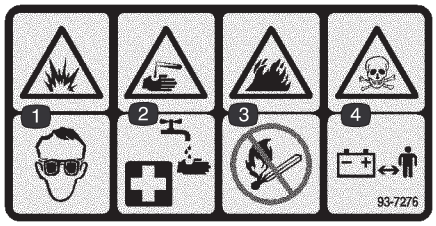

93-7276

1. Explosion hazard—wear eye protection.
2. Caustic liquid/chemical burn hazard—to perform first aid, flush with water.
3. Fire hazard—no fire, open flames, or smoking.
4. Poison hazard—keep children a safe distance from the battery.

26-7170

1. Recycle

Specifications

Note: Specifications and design subject to change without notice.

General Specifications

Width of Cut	59 in. (149.9 cm)
Wheel Tread	49-1/2 in. (125.7 cm)
Wheel Base	46-7/8 in. (119.1 cm)
Overall Length	90 in. (228.6 cm)
Overall Width (with reels)	69-3/4 in. (117.2 cm)
Overall Height	48-1/2 in. (123.2 cm)
Net Weight (dry)	969 lb. (440 kg)
Weight with Reels	1256 lb. (570 kg)
Mow Speed (adjustable)	2–5 MPH approx. (3.2–8 km/h)
Transport Speed	8.8 MPH max. (14.1 km/h)
Reverse Speed	2.5 MPH approx. (4 km/h)
Reel Speed	1975 RPM approx.

Accessories

8 Blade, 4 Bolt Cutting Unit (Heavy Duty)	Model No. 04404
8 Blade, 4 Bolt Cutting Unit	Model No. 04408
11 Blade, 4 Bolt Cutting Unit	Model No. 04406
8 Blade, SPA Cutting Unit	Model No. 04468
11 Blade, SPA Cutting Unit	Model No. 04450
8 Blade, 4 Bolt Cutting Unit	Model No. 04470
11 Blade, 4 Bolt Cutting Unit	Model No. 04471
8 Blade, SPA Cutting Unit	Model No. 04472
11 Blade, SPA Cutting Unit	Model No. 04473
Three-Wheel Drive Kit	Model No. 04433
Basket Reinforcement Kit	Part No. 26-0900
Thatching Reels	Model No. 04493
Traction Tire	Part No. 231-124
Spiker	Model No. 04494
Tri-Roller	Model No. 04495
Backlap/Reel Speed Kit	Model No. 04498
Roll-Over Protection System	Part No. 105-8258
Spark Arrester	Part No. 83-2240
Oil Cooler Kit	Part No. 105–8339
Light Kit	Part No. 105–8336

Assembly

Note: Determine the left and right side of the machine from the normal operating position.

Description	Qty.	Use
Step–right Self Tapping Screw Valve Shield Carriage Bolt, 5/16 x 3/4 in. Nut, 5/16 in.	1 2 1 2 2	Positioning the seat
Bolt, 1/4 x 5/8 in. Nut, 1/4 in.	2 2	Securing the battery cables to the battery
Gauge Bar Screw, #10 x 5/8 in. Jam Nut, #10	1 1 1	Setting the height-of-cut
Grass Basket	3	Mounts to the pull frame
Ignition Keys	2	
Warning Decal	1	Affix over English warning decal (104-2053) for CE.
Danger Decal	3	Affix over English danger decal (62-5070) for CE.
Operator’s Manual (traction unit) Engine Operator’s Manual	2 1	Read before operating the machine.
Parts Catalog Pre–delivery Sheet Certificate of Conformance	1 1 1	
Registration Card (traction unit) Registration Card (cutting unit)	1 1	Fill out and return to Toro.

Note: Mounting fasteners for the Greensmaster 3150 cutting unit are included with the cutting units.

Note: Remove the shipping bracket and nut secured to rear wheel bolt.

Activating and Charging the Battery

Warning

CALIFORNIA

Proposition 65 Warning

Battery posts, terminals, and related accessories contain lead and lead compounds, chemicals known to the State of California to cause cancer and reproductive harm. ***Wash hands after handling.***

Danger

Battery electrolyte contains sulfuric acid which is a deadly poison and causes severe burns.

- **Do not drink electrolyte and avoid contact with skin, eyes or clothing. Wear safety glasses to shield your eyes and rubber gloves to protect your hands.**
- **Fill the battery where clean water is always available for flushing the skin.**

1. Remove the wing nuts, washers, and battery clamp and lift out the battery.
2. Remove the filler caps from the battery and slowly fill each cell until the electrolyte is up to the fill line.
3. Replace the filler caps and connect a battery charger to the battery posts. Charge the battery at a rate of 3 to 4 amperes for 4 to 8 hours.

Warning

Charging the battery produces gasses that can explode.

Never smoke near the battery and keep sparks and flames away from battery.

4. When the battery is charged, disconnect the charger from the electrical outlet and battery posts, and allow the battery to sit for 5–10 minutes.
5. Remove the filler caps. Slowly add electrolyte to each cell until the level is up to the fill line. Install the filler caps.

Important Do not overfill the battery. Electrolyte will overflow onto other parts of the machine and severe corrosion and deterioration will result.

Positioning the Seat

1. Remove the locknut (Fig. 2) and seat bracket (used for shipping) attached to the right rear seat adjuster screw and discard them. Bracket not shown.

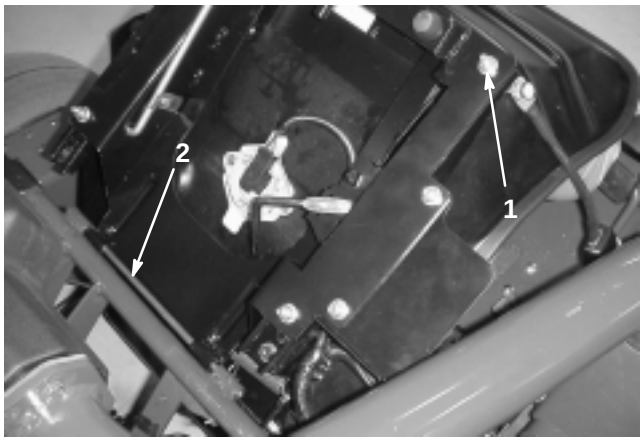

Figure 2

1. Locknut (Bracket)
2. Seat pivot rod

2. Remove the cotter pin and seat pivot rod securing the seat (shipping position). Remove the seat (Fig. 2).
3. Remove the cotter pin securing steering arm locking knob (Fig. 3) and remove the knob.

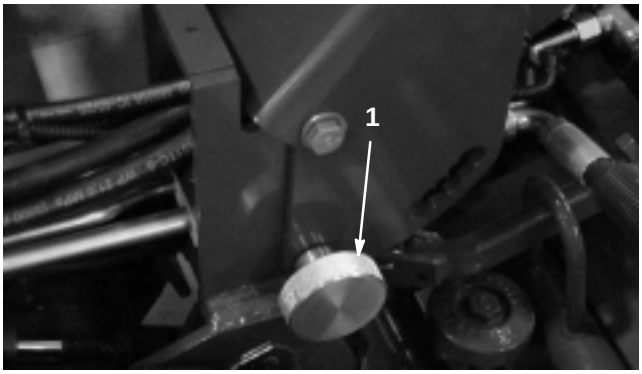

Figure 3

1. Steering arm locking knob

4. Cut the strap securing the steering arm to the seat frame and pivot the steering arm to the upright operating position.

5. Pivot the steering arm to the upright operating position (notches). Secure with locking knob and cotter pin (Fig. 4).

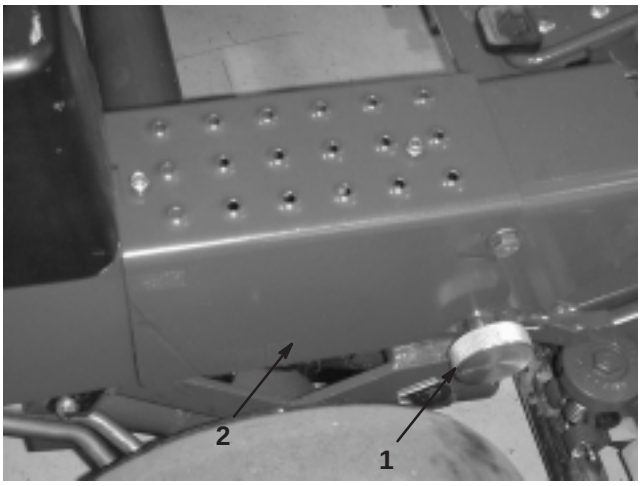

Figure 4

1. Steering arm locking knob 2. Right step

6. Mount right step to frame with 2 self tapping screws (Fig. 4).

7. Mount valve shield to the right side of the seat base with 2 carriage bolts (5/16 x 5/8 in.) and nuts. Position the shield as shown in Figure 5.

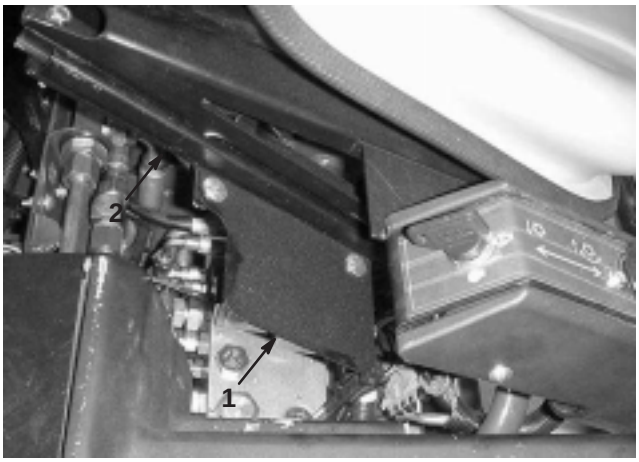

Figure 5

1. Valve shield 2. Seat base

8. Install the seat assembly in the operating position (Fig. 6). Install the seat pivot rod and cotter pin.

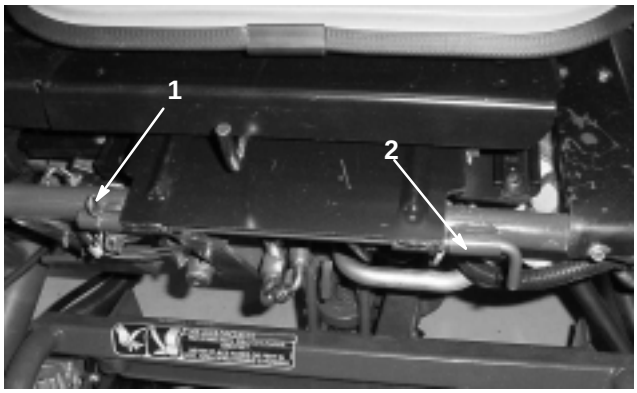

Figure 6

1. Cotter pin 2. Seat pivot rod

9. Connect the two wire harness connectors.

10. Adjust the seat position and steering arm if necessary.

Note: To gain an additional 2.5 inches of forward adjustment, mount seat in the front set of mounting holes in the seat mounting plate.

Installing the Battery

1. Mount the battery with the battery terminals toward the front of the machine.

2. Connect the positive battery cable (red) from the starter solenoid to the positive post (+) of the battery (Fig. 7). Secure it with a wrench and coat the terminal with petroleum jelly. Make sure the cable will clear the seat, in the rear-most position, which could cause wear or damage to the cable.

Warning

Battery terminals or metal tools could short against metal tractor components causing sparks. Sparks can cause the battery gasses to explode, resulting in personal injury.

- **When removing or installing the battery, do not allow the battery terminals to touch any metal parts of the tractor.**
- **Do not allow metal tools to short between the battery terminals and metal parts of the tractor.**

Warning

Incorrect battery cable routing could damage the tractor and cables causing sparks. Sparks can cause the battery gasses to explode, resulting in personal injury.

- **Always *disconnect* the negative (black) battery cable before disconnecting the positive (red) cable.**
- **Always *connect* the positive (red) battery cable before connecting the negative (black) cable.**

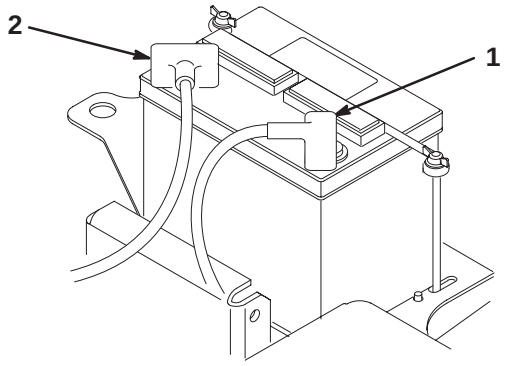

Figure 7

1. Negative (–)
2. Positive (+)

3. Connect the two black ground cables (one connected to the engine base, the other to the machine frame) to the negative (–) post of the battery. Secure it with a wrench and coat the terminal with petroleum jelly.
4. Install the battery clamp and washers and secure them with the wing nuts.
5. Place the terminal cover over the positive (+) battery post.

Installing the Cutting Units

For Cutting Unit Models 04404, 04406, 04408, 04450, and 04468

Note: When sharpening, setting the height-of-cut, or performing other maintenance procedures on the cutting units, store the cutting unit reel motors in the support tubes on the front of the frame to prevent damage to the hoses.

1. Remove the cutting units from the cartons. Assemble and adjust them as listed in the cutting unit *Operator's Manual*. Use the gauge bar from the loose parts kit to adjust the height of cut.
2. Assemble the mount nuts for the reel drive motor to each cutting unit. Leave approximately 1/2 in. (13 mm) of threads exposed on each mount stud (Fig. 8).

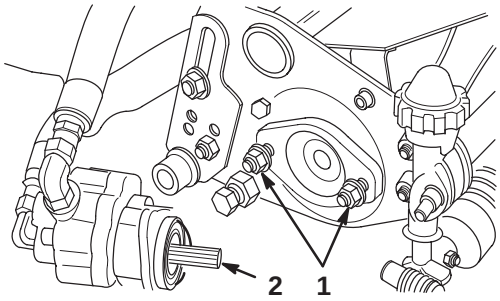

Figure 8

1. Motor mount nuts
2. Coat with grease

3. Slide the cutting units under the pull frames and position the hoop on the top of cutting units over the lift arms (Fig. 9).

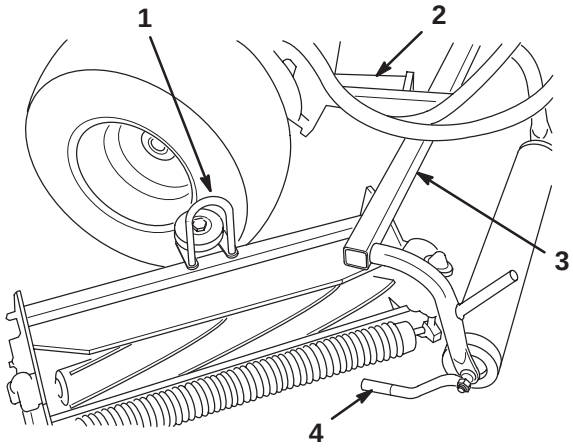

Figure 9

1. Hoop
2. Lift arm
3. Pull frame
4. Pull arm

4. Remove the protective covers from the cutting units and the reel drive motor shafts. Coat the spline shaft of the motor with clean grease and install the motor by rotating the motor clockwise so the motor flanges clear the studs. Rotate the motor counterclockwise until the flanges are encircling the studs and tighten the mounting nuts (Fig. 8).

   Note: Retain the protective covers for the cutting units. Install them whenever the reel drive motors are removed to protect the cutting unit bearings from contamination.

5. Slide the sleeve back on the ball joint and rotate the pull arm down so the socket fits over the ball stud. Release the sleeve so it slides over the stud and locks the assemblies together (Fig. 10).

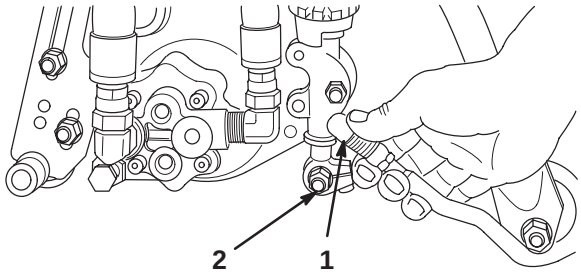

Figure 10

1. Slide back to mount
2. Ball stud

6. Mount the baskets on the pull frames, loosen the jam nuts on the pull arms, and adjust the ball sockets until there is 1/4 to 1/2 in. (6.4 to 12.7 mm) clearance between the lip of the basket and the reel blades (Fig. 11).

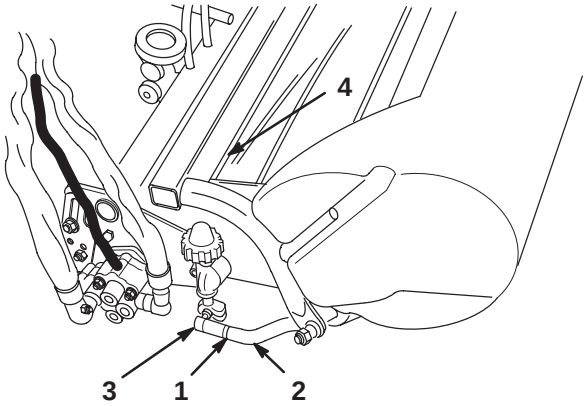

Figure 11

1. Jam nut
2. Pull arm
3. Ball joint—adjust for clearance
4. 1/4–1/2 in. (6.4–12.7 mm) clearance

Note: This prevents the basket from tipping the cutting unit forward, causing the hoop to come off of the lift arm while in the mowing operation.

Note: Be sure that the basket lip is equidistant from the reel blades across each reel. If the basket is too close to the reel, it is possible for the reel to contact the basket when the cutting unit is raised off of the ground.

7. Align the sockets in the ball joints so the open side of the socket is centered towards the ball stud. Tighten the jam nuts to secure the sockets in position (Fig. 11).

For Cutting Unit Models 04470, 04471, 04472, and 04473

Note: When sharpening, setting the height-of-cut or performing other maintenance procedures on the cutting units, store the cutting unit reel motors in the support tubes on the front of the frame to prevent damage to the hoses.

1. Remove the cutting units from the cartons. Assemble and adjust them as listed in the cutting unit *Operator's Manual*. Use the gauge bar from the loose parts kit to adjust the height of cut.

2. Mount a washer and ball stud to each end of the front roller on the cutting units (Fig. 12).

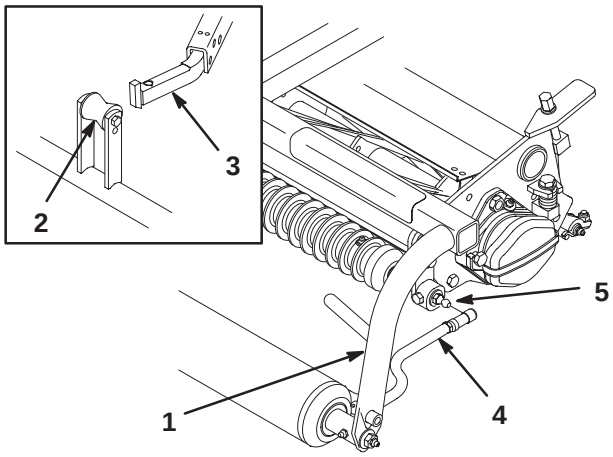

Figure 12

1. Pull frame
2. Lift roller
3. Lift arm
4. Pull arm
5. Ball stud

3. Slide the cutting unit under the pull frame while hooking the lift roller onto the lift arm (Fig. 12).

4. Slide the sleeve back on the ball joint and rotate the pull arm down so the socket fits over the ball stud. Release the sleeve so it slides over the stud and locks the assemblies together (Fig. 12).

5. Mount the baskets on the pull frames, loosen the jam nuts on the pull arms, and adjust the ball sockets until there is 1/4 to 1/2 in. (6 to 13 mm) clearance between the lip of the basket and the reel blades or the front shield.

Note: This prevents the basket from tipping the cutting unit forward, causing the lift roller to come off of the lift arm while in the mowing operation.

Be sure the basket lip is equidistant from the reel blades all across each reel. If the basket is too close to the reel, it is possible for the reel to contact the basket when the cutting unit is raised off of the ground.

6. Align the sockets in the ball joints so the open side of the socket is centered towards the ball stud. Tighten the jam nuts to secure the sockets in position (Fig. 13).

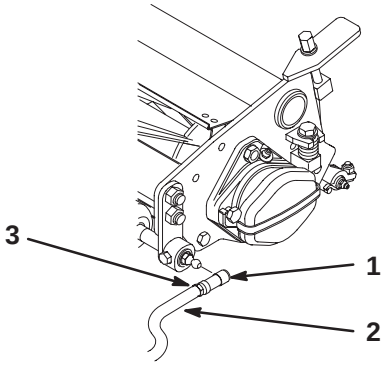

Figure 13

1. Ball joint
2. Pull arm
3. Jam nut

7. Assemble the mounting capscrews for the reel drive motor to each cutting unit. Leave approximately 1/2 in. (13 mm) of threads exposed on each mounting capscrew (Fig. 14).

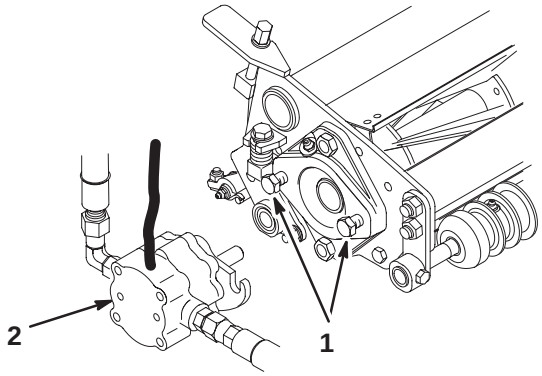

Figure 14

1. Capscrews
2. Drive motor

8. Remove the protective covers from the cutting units and the reel drive motor shafts.

Note: Retain the protective covers for the cutting units. Install them whenever the reel drive motors are removed to protect the cutting unit bearings from contamination.

9. Using a hand pump grease gun, fill the cavity at the end of the cutting unit with #2 general purpose grease.

10. Coat the spline shaft of the motor with clean grease and install the motor by rotating the motor clockwise so that the motor flanges clear the studs. Rotate the motor counterclockwise until the flanges are encircling the studs. Tighten the mounting capscrews (Fig. 14).

Rear Ballast

This unit complies with the ANSI B71.4–1999 Standard when 40 lb. (18 kg) of calcium chloride ballast is added to the rear wheel.

Important If a puncture occurs in a tire with calcium chloride, remove the unit from the turf area as quickly as possible. To prevent possible damage to the turf, immediately soak the affected area with water.

Before Operating

Note: Determine the left and right side of the machine from the normal operating position.

Checking the Engine Oil

The engine is shipped with 1-3/4 U.S. quarts (1.65 liters) (w/filter) of oil in the crankcase; however, the oil level must be checked before and after the engine is first started.

The engine uses any high-quality detergent oil having the American Petroleum Institute (API) service classification of SG, SH, or SJ. The recommended viscosity (weight) is SAE 30.

1. Position the machine on a level surface.

2. Unscrew the dipstick and wipe it with a clean rag. Screw the dipstick into the tube and make sure it is seated fully (Fig. 15). Unscrew the dipstick out of the tube and check the oil level. If the oil level is low, remove the filler cap from the valve cover and add enough oil to raise the level to the Full mark on the dipstick.

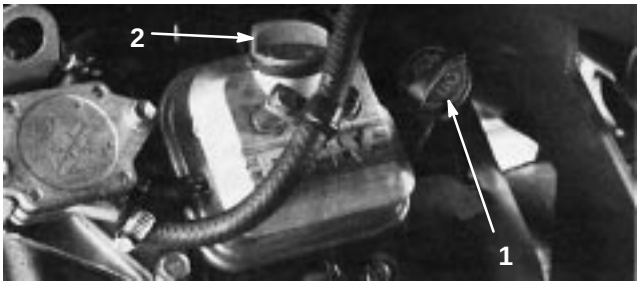

Figure 15

1. Dipstick
2. Filler cap

3. Pour oil into the opening in the valve cover until the oil level is up to the Full mark on the dipstick. Add the oil slowly and check the level often during this process. **Do not overfill.**

Important Check the oil level every eight operating hours or daily. Initially, change the oil after the first eight hours or operation; thereafter, under normal conditions,

change the oil every 50 hours and the filter every 100 hours. However, change the oil more frequently when the engine is operated in extremely dusty or dirty conditions.

4. Install the filler cap and dipstick firmly in place.

Filling the Gas Tank

Use **unleaded** regular gasoline suitable for automotive use (85 pump octane minimum). Leaded regular gasoline may be used if unleaded regular is not available.

Important Never use methanol, gasoline containing methanol, or gasohol containing more than 10% ethanol because the fuel system could be damaged. Do not mix oil with gasoline.

1. Clean around the fuel tank cap and remove the cap (Fig. 16). Add unleaded regular gasoline to the fuel tank until the level is 1 in. (25 mm) below the bottom of the filler neck. This space in the tank allows gasoline to expand. Do not fill the fuel tank completely full.

Note: Fuel tank capacity is 7 gallons (26.6 liters)

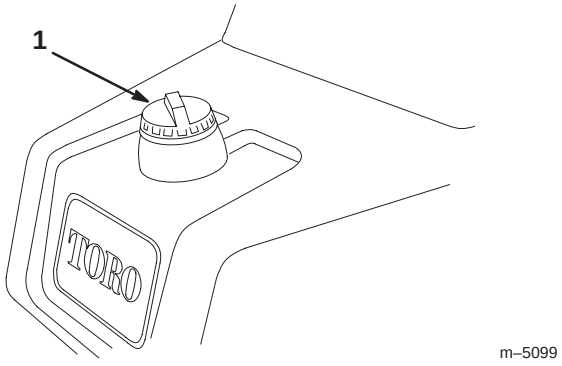

Figure 16

1. Fuel tank cap

2. Install the fuel tank cap securely. Wipe up any gasoline that may have spilled.

Danger

In certain conditions, gasoline is extremely flammable and highly explosive. A fire or explosion from gasoline can burn you and others and can damage property.

- **Fill the fuel tank outdoors, in an open area, when the engine is cold. Wipe up any gasoline that spills.**
- **Do not fill the fuel tank completely full. Add gasoline to the fuel tank until the level is 1 in. (25 mm) below the bottom of the filler neck. This empty space in the tank allows gasoline to expand.**
- **Never smoke when handling gasoline, and stay away from an open flame or where gasoline fumes may be ignited by a spark.**
- **Store gasoline in an approved container and keep it out of the reach of children. Never buy more than a 30-day supply of gasoline.**
- **Always place gasoline containers on the ground away from your vehicle before filling.**
- **Do not fill gasoline containers inside a vehicle or on a truck or trailer bed because interior carpets or plastic truck bed liners may insulate the container and slow the loss of any static charge.**
- **When practical, remove gas-powered equipment from the truck or trailer and refuel the equipment with its wheels on the ground.**
- **If this is not possible, then refuel such equipment on a truck or trailer from a portable container, rather than from a gasoline dispenser nozzle.**
- **If a gasoline dispenser nozzle must be used, keep the nozzle in contact with the rim of the fuel tank or container opening at all times until fueling is complete.**

Checking the Hydraulic System

The machine's reservoir is filled at the factory with approximately 8.5 gallons (32.2 liters) of high quality hydraulic fluid. **Check the level of hydraulic fluid before the engine is first started and daily thereafter.** The appropriate hydraulic oils are listed below.

The following list is not assumed to be all-inclusive. Hydraulic fluids produced by other manufacturers may be used if they can cross reference to find an equivalent to the products listed. Toro will not assume responsibility for damage caused by improper substitutions, so use only products from reputable manufacturers who will stand behind their recommendation.

Multigrade Hydraulic Fluid—ISO VG 46 Normal Climate 32°F (0°C) to 110°F (43°C)

Mobil	DTE 15M
Amoco	Rykon Premium ISO 46
Chevron	Rykon Premium Oil ISO 46
Conoco	Hydroclear AW MV46
Exxon	Univis N46
Pennzoil	AWX MV46
Shell	Tellus T 46
Texaco	Rando HDZ 46

Important The ISO VG 46 Multigrade fluid has been found to offer optimal performance in a wide range of temperature conditions. For operation in consistently high ambient temperatures, 65°F (18°C) to 120°F (49°C), ISO VG 68 hydraulic fluid may offer improved performance.

High Operating Temperature Fluid—ISO VG 68

Mobil	DTE 26
Amoco	Rykon AW No. 68
Chevron	Hydraulic Oil AW ISO 68
Conoco	Hydroclear AW MV46 68
Exxon	Nuto H 68
Pennzoil	AW Hydraulic Oil 68
Shell	Tellus 68
Texaco	Rando HD 68

Biodegradable Hydraulic Fluid—Mobil 224H

Important Mobil EAL 224H is the only biodegradable oil tested and approved by Toro. Contamination by mineral–based hydraulic fluids will change the biodegradability and toxicity of this oil. When changing from standard fluid to the biodegradable type, be certain to follow the approved flushing procedure published by Mobil. Contact your Toro Distributor for details. The oil is available in 5 gallon (19 l) containers from your Toro Distributor, order part no. 100–7674.

Note: Use of this fluid requires installation of an Oil Cooler Kit, Part No. 105–8339, to the traction unit. This biodegradable fluid will break down quickly if the temperature exceeds 180°F (82°C).

Premium Biodegradable Hydraulic Fluid—Mobil EAL EnviroSyn 46H

Important Mobil EAL EnviroSyn 46H is the only synthetic biodegradable fluid approved by Toro. This fluid is compatible with the elastomers used in Toro hydraulic systems and is suitable for a wide–range of temperature conditions. This fluid is compatible with conventional mineral oils, but for maximum biodegradability and performance the hydraulic system should be thoroughly flushed of conventional fluid. The oil is available in 5 gallon (19 l) containers or 55 gallon drums from your Mobil Distributor.

Note: Many hydraulic fluids are almost colorless, making it difficult to spot leaks. A red dye additive for the hydraulic system oil is available in 2/3 oz. (20 ml) bottles. One bottle is sufficient for 4–6 gal. (15–22 l) of hydraulic oil. Order Part No. 44-2500 from your Authorized Toro Distributor. **This red dye is not recommended for use with biodegradable fluids. Use food coloring.**

Important Regardless of hydraulic fluid type used, any traction unit used for mowing fairways, verticutting or used during ambient temperatures (65°F 18°C) to 120°F (49°C) should have Oil Cooler Kit, Part No. 105–8339, installed.

1. Position the machine on a level surface. Make sure the machine has cooled down so the oil is cold. Check the oil level by viewing the sight gauge on the side of the auxiliary oil tank (Fig. 17). If the oil level is up to the Full mark next to the gauge, the oil level is sufficient.

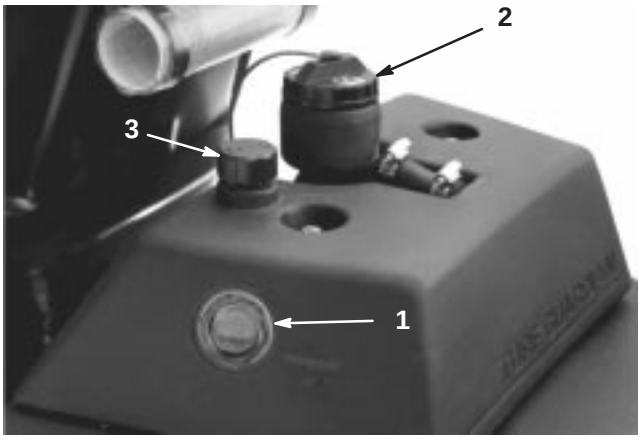

Figure 17

1. Sight gauge
2. Hydraulic tank cap
3. Auxiliary tank breather

2. If the oil level is below the Full mark on the auxiliary tank, remove the cap from the hydraulic oil tank and slowly fill the tank with high quality hydraulic fluid until the level is up to the mark next to the sight gauge. Do not mix oils. Install the cap.

Important To prevent system contamination, clean the top of the hydraulic oil containers before puncturing them. Ensure that the pour spout and funnel are clean.

Note: Make a close visual inspection of the hydraulic components. Inspect them for leaks, loose fasteners, missing parts, improperly routed lines, etc. Make any corrections necessary.

Tire Pressure

The tires are over-inflated at the factory for shipping purposes. Reduce the pressure to the proper levels before starting the unit.

Vary the tire pressure for the front wheels, depending upon your turf conditions, from a minimum of 8 psi to a maximum of 12 psi (55 to 83 kPa).

Vary the tire pressure for the rear wheel from a minimum of 8 psi to a maximum of 15 psi (55 to 103 kPa).

Checking the Torque of the Wheel Nuts

Warning

Failure to maintain proper torque of the wheel nuts could result in personal injury.

Torque the wheel nuts to 70–90 ft.-lb. (95–122 N·m) after 1–4 hours of operation and again after 10 hours of operation. Torque every 200 hours thereafter.

Operation

Note: Determine the left and right side of the machine from the normal operating position.

Think Safety First

Please carefully read all of the safety instructions and symbols in the safety section. Knowing this information could help you or bystanders avoid injury.

The use of protective equipment, such as but not limited to, for eyes, ears, feet, and head is recommended.

Controls

Brake Pedal

The brake pedal (Fig. 18) actuates an automotive drum-type mechanical brake located at each front traction wheel.

Parking Brake Button

Depressing the brake pedal to actuate the brake assembly, then depressing the small button indicated (Fig. 18) will keep the brakes actuated for parking. Disengage it by depressing the brake pedal. Form the habit of locking the parking brake before you leave the machine.

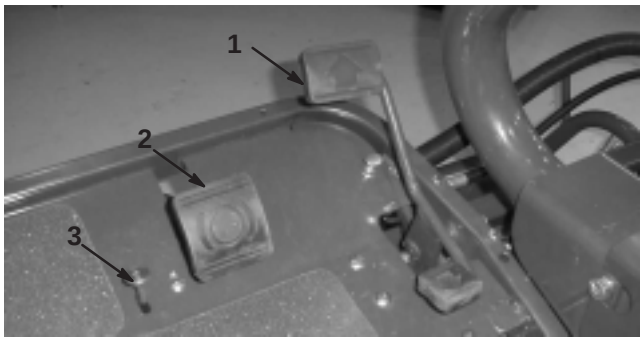

Figure 18

1. Traction pedal
2. Brake pedal
3. Parking brake button

Traction and Stopping Pedal

The traction pedal (Fig. 18) has three functions: to make the machine move forward, to move it backward, and to stop the machine. Depress the top of the pedal to move forward and the bottom of the pedal to move backward or to assist in stopping when moving forward. Also, allow the pedal to move to the neutral position to stop the machine. For operator comfort, do not rest the heel of your foot on reverse when operating forward (Fig. 19).

Ground speeds are as follows:

- 2 to 5 MPH (3.2 to 8 km/h) forward mowing speed
- 8.8 MPH (14.1 km/h) maximum transport speed
- 2.5 MPH (4 km/h) reverse speed

Figure 19

Throttle Control

The throttle control (Fig. 20) gives the operator the ability to control the speed of the engine. Moving the throttle control toward the Fast position increases the engine RPM; moving the throttle control toward Slow will decrease the engine RPM.

Note: The engine cannot be stopped by the use of the throttle control.

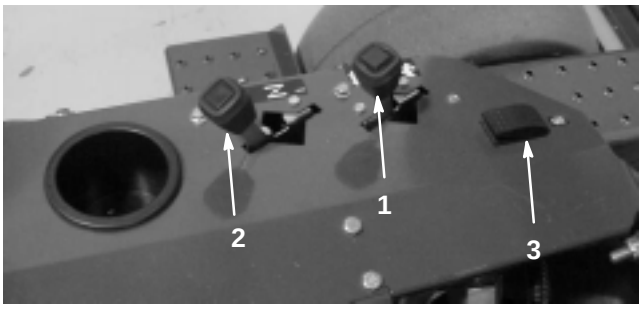

Figure 20

1. Throttle control
2. Choke control
3. Leak detector test/light switch

Choke

To start a cold engine, close the carburetor choke by moving the choke control (Fig. 20) forward to the Closed position. After the engine starts, regulate the choke to keep the engine running smoothly. As soon as possible, open the choke by pulling it rearward to the Open position. A warm engine requires little or no choking.

Leak Detector Test/Light Switch

From the middle operating position, move the switch (Fig. 20) rearward to check the operation of the leak detector alarm and time delay. Move the switch forward to operate the optional lights.

Ignition Switch

Insert the key into the switch (Fig. 22) and turn it clockwise as far as possible to the Start position to start the engine. Release the key as soon as the engine starts; the key will move to the On position. Turn the key counterclockwise to the Off position to stop the engine.

Hour Meter

The hour meter (on left control panel) indicates the total hours of machine operation. It starts to function whenever the key switch is rotated to On.

Seat Adjusting Handle

This lever, located at the front of the seat (Fig. 21), allows a 4 in. (10 cm) fore and aft adjustment.

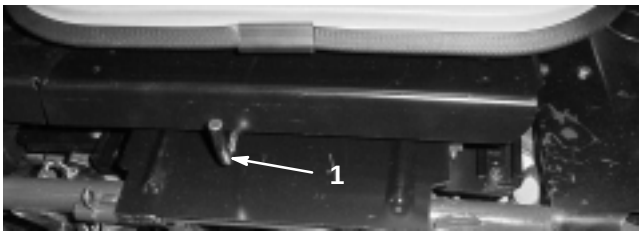

Figure 21

1. Seat adjustment lever

Raise/Lower Mow Control

Moving the control (Fig. 22) forward during operation lowers the cutting units and starts the reels. Pull back on the control to stop the reels and raise the cutting units. During operation the reels can be stopped by pulling back on the control momentarily and releasing it. Restart the reels by moving the control forward.

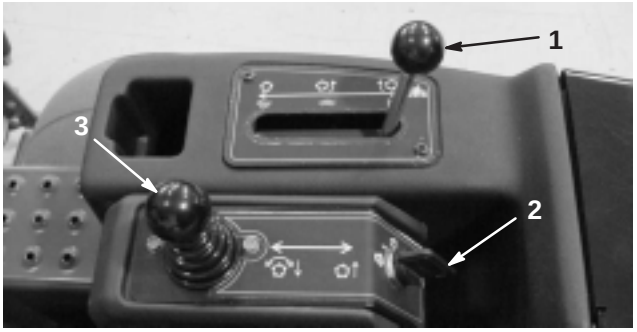

Figure 22

1. Functional control lever
2. Ignition switch
3. Raise/Lower Mow Control

Functional Control Lever

The functional control lever (Fig. 22) provides two traction selections plus a Neutral position. It is permissible to shift from mow to transport or transport to mow (not to neutral) while the machine is in motion. No damage will result.

- Rear Position—neutral and backlapping
- Middle Position—used for mowing operation
- Front Position—used for transport operation

Steering Wheel Locking Lever

Rotate the lever (Fig. 23) forward to loosen the adjustment, raise or lower steering wheel for operator comfort, then, rotate the lever rearward to tighten the adjustment.

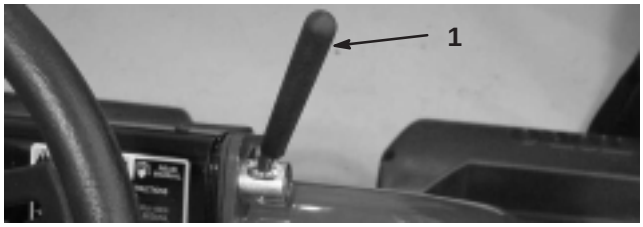

Figure 23

1. Steering wheel locking lever

Steering Arm Locking Knob

Loosen knob (Fig. 24) until shoulder on knob clears the notches in steering arm. Raise or lower steering arm to desired height while aligning shoulder of knob with notch in steering arm. Tighten knob to lock adjustment.

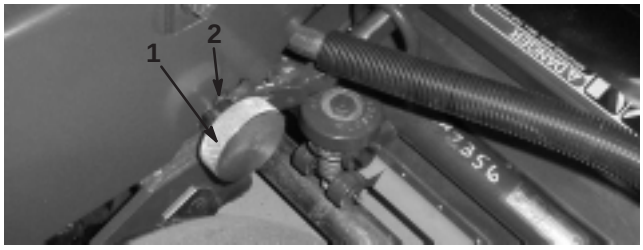

Figure 24

1. Steering arm locking knob
2. Notches in steering arm

Caution

Do not attempt to adjust steering arm locking knob while operating the machine. Stop machine and remove key from ignition before adjusting steering arm.

Fuel Shut-Off Valve

Close the fuel shut-off valve (Fig. 25), under fuel tank, when storing or transporting the machine on a truck or trailer.

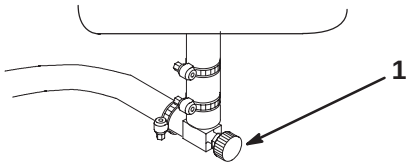

Figure 25

1. Fuel shut-off (under fuel tank)

Break-in Period

Refer to the Engine Manual supplied with the machine for oil change and maintenance procedures recommended during the break-in period.

Only 8 hours of mowing operation is required for the break-in period.

Since the first hours of operation are critical to future dependability of the machine, monitor its functions and performance closely so that minor difficulties, which could lead to major problems, are noted and can be corrected. Inspect the machine frequently during break-in for signs of oil leakage, loose fasteners, or any other malfunction.

To ensure optimum performance of the brake system, burnish (break-in) the brakes before using the machine. To burnish the brakes, firmly apply the brakes and drive the machine at mowing speed until the brakes are hot, as indicated by their smell. An adjustment to the brakes may be required after break-in; refer to Adjusting the Brakes, page 35.

Starting the Engine

Note: Inspect the areas beneath the mowers to be certain they are clear of debris.

1. Sit on the seat, lock the parking brake, disengage the raise/lower mow control move the functional control lever to Neutral.
2. Remove your foot from the traction pedal and make sure the pedal is in the Neutral position.
3. Move the choke lever to the Closed position (only when starting a cold engine) and the throttle lever to the half throttle position.
4. Insert and rotate the ignition key clockwise until the engine starts. After the engine starts, regulate the choke to keep the engine running smoothly. As soon as possible, open the choke by pulling it rearward to the Off position. A warm engine requires little or no choking.
5. Check the machine out with the following procedures after the engine has started:

A. Move the throttle control to the Fast position and momentarily engage the reels by moving the raise/lower mow control lever forward. The cutting units should drop and all the reels should turn.

B. Move the raise/lower mow control lever rearward. The cutting reels should stop and the cutting units should raise to the full transport position.

Important Stop the engine. Check the lip of each basket to be sure it is not in contact with the reel during operation. Adjust the pull arms if contact is noted; refer to Installing the Cutting Units.

C. Depress the brake pedal to keep the machine from moving, and operate the traction pedal through the forward and reverse positions.

D. Continue the above procedure for 1–2 minutes. Neutralize the functional control lever, lock the parking brake, and turn the engine off.

E. Check for oil leaks. If oil leaks appear, check the tightness of the hydraulic fittings. If oil leaks continue to appear, contact your local Toro Distributor for assistance and, if necessary, replacement parts.

Important A trace of oil on the motor or wheel seals is normal. Seals require a small amount of lubrication to perform properly.

Note: When the machine is new and the bearings and reels are tight, it is necessary to use the Fast throttle control position for this check. A fast throttle setting may not be required after the break-in period.

Testing the Safety Interlock System

Caution

If safety interlock switches are disconnected or damaged the machine could operate unexpectedly causing personal injury.

- **Do not tamper with the interlock switches.**
- **Check the operation of the interlock switches daily and replace any damaged switches before operating the machine.**
- **Replace switches every two years regardless of whether they are operating properly or not.**

The purpose of the safety interlock system is to prevent operation of the machine where there is possible injury to the operator or the machine.

The safety interlock system prevents the engine from starting unless:

- The traction pedal is in neutral.
- The functional control lever is in neutral.

The safety interlock system prevents the machine from moving unless:

- The parking brake is off.
- The operator is seated.
- The functional control lever is in Mow or Transport.

The safety interlock system prevents the reels from operating unless the functional control lever is in the Mow position.

Perform the following system checks daily to be sure the interlock system is operating correctly:

1. Sit on the seat, move the traction pedal to Neutral, move the functional control lever to Neutral, and engage the parking brake. Try to depress the traction pedal. The pedal should not depress, which means that the interlock system is operating correctly. Correct the problem if it is not operating properly.
2. Sit on the seat, move the traction pedal to Neutral, move the functional control lever to Neutral, and engage the parking brake. Move the functional control lever to mow or transport and try to start the engine. The engine should not crank, which means that the interlock system is operating correctly. Correct the problem if it is not operating properly.
3. Sit on the seat, move the traction pedal to Neutral, move the functional control lever to Neutral, and engage the parking brake. Start the engine and move the functional control lever to mow or transport. The engine should kill, which means that the interlock system is operating correctly. Correct the problem if it is not operating properly.
4. Sit on the seat, move the traction pedal to Neutral, move the functional control lever to Neutral, and engage the parking brake. Start the engine. Release the parking brake, move the functional control lever to mow, and rise from the seat. The engine should kill, which means that the interlock system is operating correctly. Correct the problem if it is not operating properly.
5. Sit on the seat, move the traction pedal to Neutral, move the functional control lever to Neutral, and engage the parking brake. Start the engine. Move the raise/lower mow control forward to lower the cutting units. The cutting units should not start rotating. If they do, the interlock system is not operating correctly. Correct the problem.

Checking the Leak Detector

The leak detector system is designed to assist in early detection of hydraulic oil system leaks. If the oil level in the main hydraulic reservoir, is lowered by 4 to 6 ounces (118–177 ml), the float switch in the tank will close. After a one second delay, the alarm will sound, alerting the operator (Fig. 28). Expansion of oil, due to normal heating during machine operation, will cause the oil to transfer into the auxiliary oil reservoir. The oil is allowed to return to the main tank when the ignition switch is turned off.

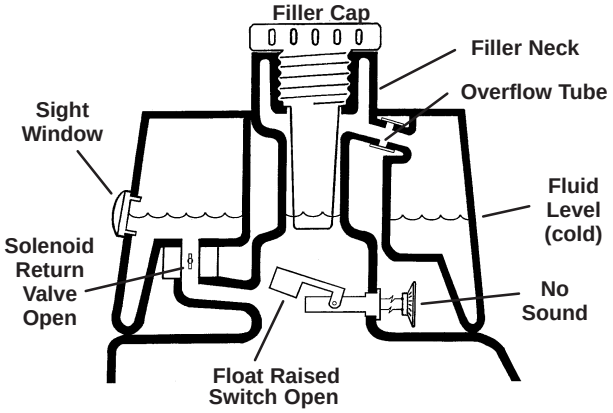

Hydraulic Oil Tank

Figure 26

Before Start (oil cold)

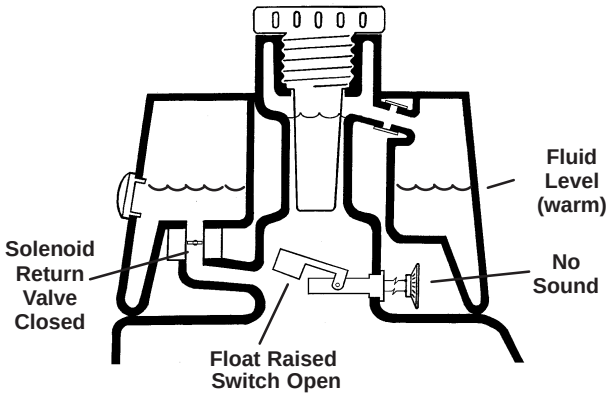

Figure 27

Normal Operation (oil warm)

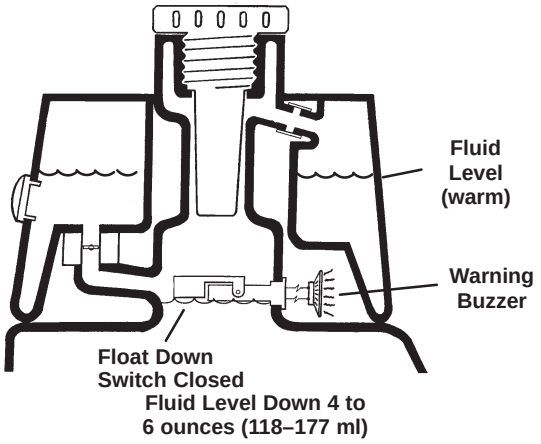

Figure 28

Leak Alert!

Checking the System Operation

1. With ignition switch in the On position, move the leak detector switch rearward and hold. After the one-second time delay elapses the alarm should sound.
2. Release the leak detector switch.

Checking the Leak Detector System Operation

1. Move the ignition switch to the On position. **Do not start the engine.**
2. Remove the hydraulic tank cap and strainer from the neck of the tank.
3. Insert a clean rod or screwdriver into the tank neck and gently push down on the switch float (Fig. 29). The alarm should sound after the one-second delay.

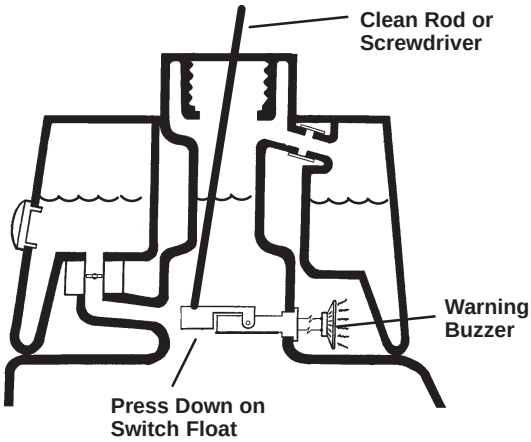

Figure 29

4. Release the float. The alarm should stop sounding.

5. Install the strainer screen and hydraulic tank cap. Move the ignition switch to the Off position.

Preparing the Machine for Mowing

To assist in aligning the machine for successive cutting passes, it is suggested the following be done to the No. 2 and No. 3 cutting unit baskets:

1. Measure in approximately 5 in. (12.7 cm) from the outer edge of each basket.

2. Either place a strip of white tape or paint a line onto each basket paralleling the outer edge of each basket (Fig. 30).

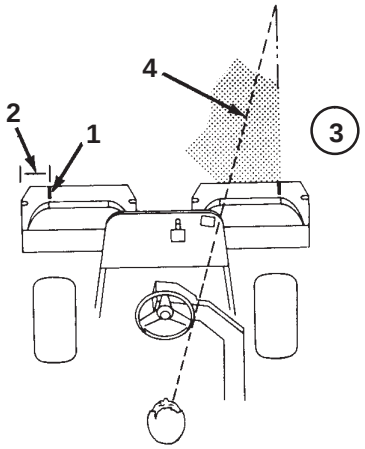

Figure 30

1. Alignment strip
2. Approximately 5 in. (12.7 cm)
3. Cut grass on right
4. Keep focal spot 6–10 ft. (1.8–3 m) ahead of the machine.

Training Period

Before mowing greens with the machine, it is recommended that you find a clear area and practice starting and stopping, raising and lowering the cutting units, turning, etc. This training period will be beneficial to the operator in gaining confidence in the performance of the machine.

Before Mowing

Inspect the green for debris, remove the flag from the cup, and determine the best direction to mow. Base the direction to mow on the previous mowing direction. Always mow in an alternate pattern from the previous mowing so that the grass blades will be less apt to lay down and therefore be difficult to trap between the reel blades and bedknife.

Mowing Procedures

1. Approach the green with the functional control lever in the Mow position and the throttle at full speed. Start on one edge of the green so the ribbon procedure of cutting may be used. This holds compaction to a minimum and leaves a neat, attractive pattern on the greens.

2. Actuate the raise/lower mow lever as the front edge of the grass baskets cross the outer edge of the green. This procedure drops the cutting units to the turf and starts the reels.

Important Familiarize yourself with the fact that the center cutting unit reel is delayed and therefore, you should practice to try to gain the required timing necessary to minimize the cleanup mowing operation.

3. Overlap a minimal amount with the previous cut on return passes. To assist in maintaining a straight line across the green and keep the machine an equal distance from the edge of the previous cut, establish an imaginary sight line approximately 6 to 10 ft. (1.8 to 3 m) ahead of the machine to the edge of the uncut portion of the green (Fig. 30 and 31). Some find it useful to include the outer edge of the steering wheel as part of the sight line; i.e. keep the steering wheel edge aligned with a point that is always kept the same distance away from the front of the machine (Fig. 30 and 31).

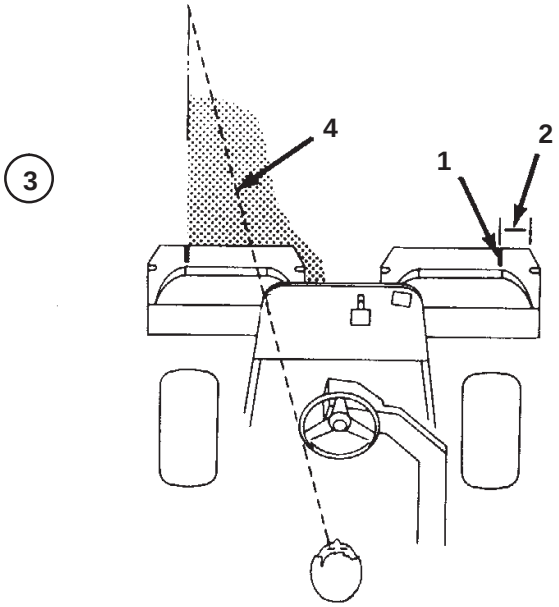

Figure 31

1. Alignment strip
2. Approximately 5 in. (12.7 cm)
3. Cut grass on right
4. Keep focal spot 6–10 ft. (1.8–3 m) ahead of the machine.

4. As the front of the baskets cross the edge of the green, move raise/lower mow control rearward. This will stop the reels and lift the cutting units. Timing of this procedure is important, so the mowers do not cut into the fringe area. However, as much of the green as possible should be cut to minimize the amount of grass left to mow around the outer periphery.

5. Cut down on operating time and ease lineup for the next pass by momentarily turning the machine in the opposite direction, then turning in the direction of the uncut portion; i.e., if intending to turn right, first swing slightly left, then right. This will assist in getting the machine more quickly aligned for the next pass. Follow the same procedure for turning in the opposite direction. It is a good practice to try to make as short of a turn as possible. However, turn in a wider arc during warmer weather to minimize the possibility of bruising the turf.

Note: Due to the nature of the power steering system, the steering wheel will not return to its original position after a turn has been completed.

Important The machine should never be stopped on a green with the cutting unit reels operating as damage to the turf may result. Stopping on a wet green with the machine may leave marks or indentations from the wheels.

6. If the leak detector alarm sounds while cutting on a green, immediately raise the cutting units, drive directly off of the green and stop the machine in an area away from the green. Determine the cause of the alarm and correct the problem.

Important Prolonged idling of the machine after heavy use may cause a false alarm in the leak detector system, due to oil contracting as it cools. If this occurs, turn the engine off for approximately one minute, to allow the main hydraulic tank and the auxiliary tank levels to stabilize.

7. Finish cutting the green by mowing the outer periphery. Be sure to change the direction of cutting from the previous mowing. Always keep weather and turf conditions in mind and be sure to change the direction of mowing from the previous cutting. Replace the flag.

Note: At the end of the periphery cut, momentarily pull back on the raise/lower mow lever to shut the reels off without raising them. Continue moving forward until the reel stops rotating, then, drive off the green and raise the reels (This will help prevent dribbling grass onto the green while raising the reels).

8. Empty the grass baskets of all clippings before transporting to the next green. Heavy wet clippings place an undue strain on the baskets and will add unnecessary weight to the machine, thereby increasing the load on the engine, hydraulic system, brakes, etc.

Leak Detector Operation

The leak detector alarm may sound for one of the following reasons:

- A leak of 4 to 6 ounces (118–177 ml) has occurred.
- The oil level in the main reservoir is reduced by 4 to 6 ounces due to contraction of the oil by cooling.

If the alarm sounds, it should be turned off as quickly as possible and inspected for leaks. If the alarm sounds while operating on a green it may be appropriate to drive off the green first. The source of the leak should be determined and repaired before continuing operation. If a leak is not found, and a false leak is suspected, move the ignition switch to the Off position and allow the machine to stand for 1–2 minutes to allow the oil levels to stabilize. Then start the machine and operate in a non-sensitive area to confirm no leak exists.

False alarms, due to oil contraction, may be caused by extended idling of the machine after normal operation. A false alarm may also occur, if the machine is worked at a reduced workload after an extended period of a heavier workload. To avoid false alarms, turn the machine off rather than idling for extended periods.

Transport Operation

Make sure the cutting units are in the full up position. Move the functional control lever to the transport position. Use the brakes to slow the machine while going down steep hills to avoid loss of control. Always approach rough areas at a reduced speed and cross severe undulations carefully. Familiarize yourself with the width of the machine. Do not attempt to pass between objects that are close together so that costly damage and down time can be prevented.

Inspection and Clean-Up After Mowing

At the completion of the mowing operation, thoroughly wash the machine with a garden hose without a nozzle so excessive water pressure will not cause contamination and damage to seals and bearings. **Never wash a warm engine or electrical connections with water.**

After cleaning, it is recommended the machine be inspected for possible hydraulic fluid leaks and damage or wear to hydraulic and mechanical components. The cutting units should be checked for sharpness. Also, lubricate the brake shaft assembly with SAE 30 oil or spray lubricant to deter corrosion and help keep the machine performing satisfactorily during the next mowing operation.

Towing the Traction Unit

In case of an emergency, the machine can be towed for a short distance (less than 1/4 mile [0.4 km]). However, we do not recommend this as a standard procedure.

Important Do not tow the machine faster than 2–3 MPH (3–5 km/h) because the drive system may be damaged. If the machine must be moved a considerable distance, transport it on a truck or trailer.

1. Locate the bypass valve on the pump and rotate it so that the slot is vertical (Fig. 32).

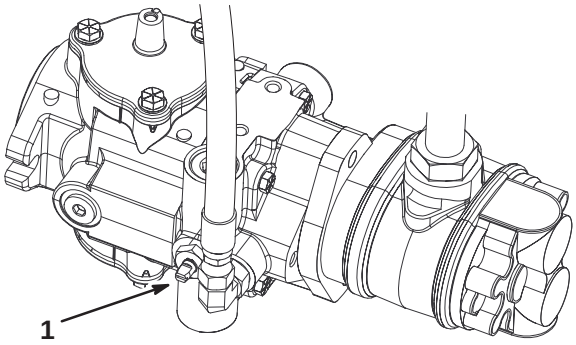

Figure 32

1. Bypass valve—slot shown in closed (horizontal) position

2. Before starting the engine, close the bypass valve by rotating it so that the slot is horizontal (Fig. 32). Do not start the engine when the valve is open.

Maintenance

Note: Determine the left and right side of the machine from the normal operating position.

Recommended Maintenance Schedule

Maintenance Service Interval	Maintenance Procedure
After first 8 hours	• Change the engine oil. • Replace the engine oil filter.
After first 50 hours	• Replace the hydraulic oil filter. • Check the engine RPM (at idle and full throttle).
Every 50 hours	• Check the battery fluid level. • Check the battery cable connections. • Service the air filter pre-cleaner. • Lubricate all grease fittings.[1] • Change the engine oil.
Every 100 hours	• Replace the engine oil filter. • Replace the air filter element.
Every 200 hours	• Check the reel bearing preload adjustment. • Torque the wheel lug nuts.
Every 800 hours	• Replace the spark plugs. • Replace the fuel filter. • Check the engine RPM (idle and full throttle). • Check the valve clearance. • Replace the hydraulic oil and filter.
Every 2000 hours or 2 years (whichever occurs first)	• Replace moving hoses. • Replace the safety switches. • Drain/flush the fuel tank. • Drain/flush the hydraulic tank.

[1]immediately after **every** washing, regardless of the interval listed

Important Refer to your engine operator's manual for additional maintenance procedures.

Daily Maintenance Checklist

Duplicate this page for routine use.

Maintenance Check Item	For the week of:						
	Mon.	Tues.	Wed.	Thurs.	Fri.	Sat.	Sun.
Check the safety interlock operation.							
Check the instrument operation.							
Check the leak detector alarm.							
Check the brake operation.							
Check the fuel level.							
Check the engine oil level.							
Clean the engine air cooling fins.							
Inspect the air filter pre-cleaner.							
Check any unusual engine noises.							
Check the hydraulic hoses for damage.							
Check for fluid leaks.							
Check the tire pressure.							
Check the reel-to-bedknife adjustment.							
Check the height-of-cut adjustment.							
Lubricate all grease fittings.[1]							
Lubricate the mow, lift, and brake linkage.							
Touch up damaged paint.							

[1]immediately after **every** washing, regardless of the interval listed

Notation for Areas of Concern

Inspection performed by:		
Item	**Date**	**Information**
1		
2		
3		
4		
5		
6		
7		
8		
9		
10		
11		
12		

Caution

If you leave the key in the ignition switch, someone could accidently start the engine and seriously injure you or other bystanders.

Remove the key from the ignition and disconnect the wire from the spark plug before you do any maintenance. Set the wire aside so that it does not accidentally contact the spark plug.

Lubrication

The traction unit has grease fittings that must be lubricated regularly with No. 2 General Purpose Lithium-Base Grease. If the machine is operated under normal conditions, lubricate all bearings and bushings after every 50 hours of operation.

The following traction unit bearings and bushings must be lubricated:

- Rear wheel roller clutches and external ball bearing (1) (Fig. 33)
- Steering fork shaft (1) (Fig. 34)
- Rod end (1) (Fig. 34)
- Lift arm pivot (3) and pivot hinge (3) (Fig. 35)
- Pull frame shaft and roller (12) (Fig. 36)
- Power steering cylinder (Fig. 37)
- Lift cylinders (3) (Fig. 38)
- Speed selector linkage (3) (Fig. 39 & 40)

1. Wipe the grease fitting clean so foreign matter cannot be forced into the bearing or bushing.
2. Pump grease into the bearing or bushing until the grease is visible. Wipe up excess grease.
3. Apply grease to the reel motor spline shaft and onto the lift arm when the cutting unit is removed for service.
4. Apply a few drops of SAE 30 engine oil or spray lubricant (WD 40) to all pivot points daily after cleaning.

Figure 33

Figure 34

Figure 35

Figure 36

Figure 37

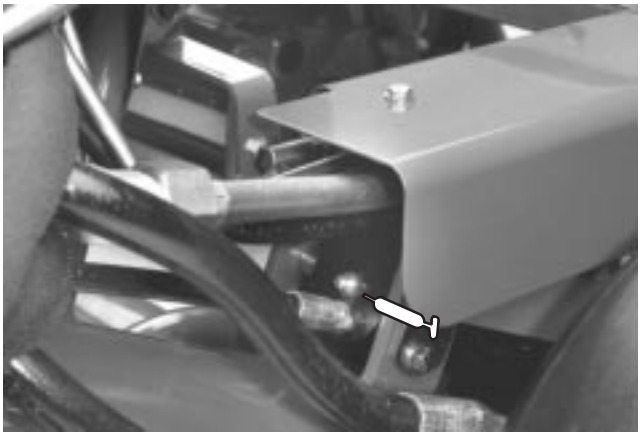

Figure 38

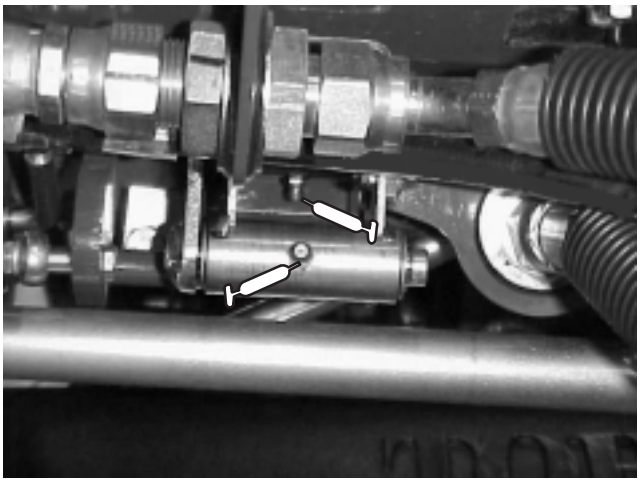

Figure 39

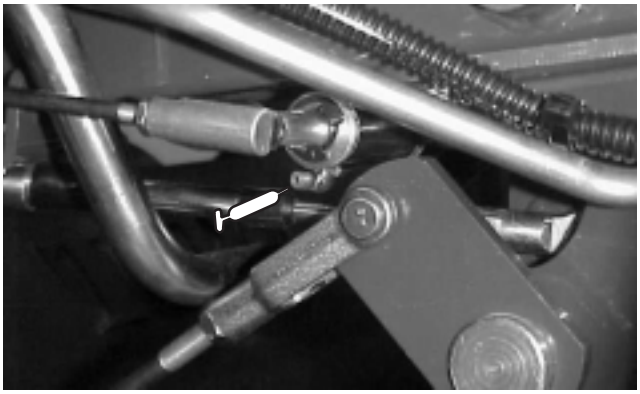

Figure 40

Removing the Seat

The seat may be removed to ease performing maintenance in the valve block area of the machine.

1. Unlatch and raise the seat. Secure with prop rod.
2. Disconnect the 2 wire harness connectors under the seat.
3. Lower the seat and remove the cotter pin securing the seat pivot rod to the frame (Fig. 41).
4. Slide the seat pivot rod to the left side, slide the seat forward, and lift the seat out.
5. Reverse the procedure to install the seat.

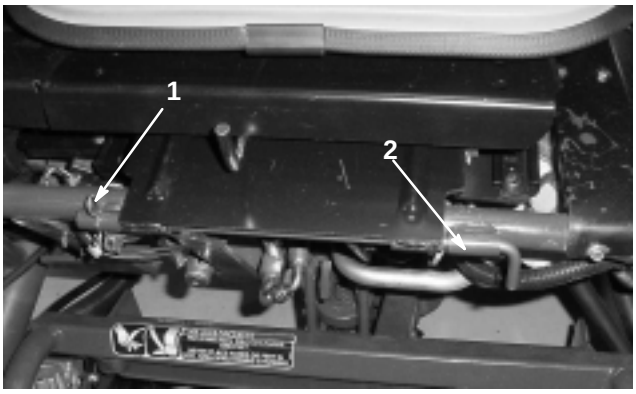

Figure 41

1. Cotter pin
2. Seat pivot rod

Jacking the Machine

Caution

Before servicing, support the machine with jacks stands or blocks of wood.

Before jacking the machine, lower the cutting units.

The jacking points are as follows:

- Right side—under the ROPS support bracket (Fig. 42)
- Left side—under the step
- Rear—at the castor fork

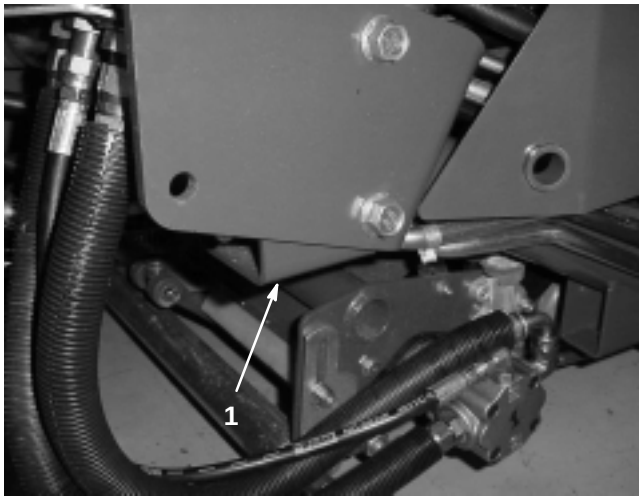

Figure 42

1. ROPS support bracket

Changing the Engine Oil and Filter

Change the oil and filter after the first 8 hours of operation. Thereafter, change the oil every 50 hours and the filter every 100 hours.

1. Remove the drain plug (Fig. 43) and let oil flow into a drain pan. When the oil stops, install the drain plug.

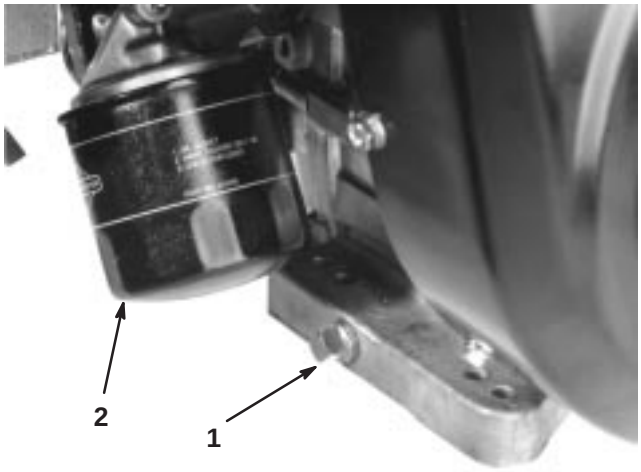

Figure 43

1. Drain plug
2. Oil filter

2. Remove the oil filter (Fig. 43). Apply a light coat of clean oil to the new filter gasket.

3. Screw the filter on by hand until the gasket contacts the filter adapter, then tighten 1/2 to 3/4 turn further. **Do not overtighten.**

4. Add oil to the crankcase; refer to Checking the Engine Oil, page 16. **Do not overfill.**

5. Dispose of the used oil properly.

Servicing the Air Cleaner

Service the air cleaner foam pre-cleaner after every 50 operating hours and the air cleaner cartridge after every 100 operating hours. More frequent cleaning is required when operating in dusty or dirty conditions.

1. Release the locking clips and remove the air cleaner cover (Fig. 44). Clean the cover thoroughly.

Figure 44

1. Air cleaner cover

2. Remove the wing nut securing the elements to the air cleaner body.

3. If the foam element is dirty, remove it from the paper element (Fig. 45). Clean it thoroughly.

   A. Wash the foam element in a solution of liquid soap and warm water. Squeeze it to remove dirt, but do not twist it because the foam may tear.

   B. Dry it by wrapping it in a clean rag. Squeeze the rag and foam element dry.

Figure 45

1. Foam element
2. Paper element

4. When servicing the foam element, check the condition of the paper element. Clean it by gently tapping it on a flat surface or replace it if needed.

Note: Do not oil the foam element.

5. Install the foam element, paper element, and air cleaner cover.

Important Do not operate the engine without the air cleaner element because extreme engine wear and damage will likely result.

Adjusting the Throttle Control

Proper throttle operation is dependent upon proper adjustment of the throttle control. Before adjusting the carburetor, ensure that the throttle control is operating properly.

1. Loosen the cable clamp screw securing the cable to the engine (Fig. 46).

2. Move the remote throttle control lever forward to the Fast position.

3. Pull firmly on the throttle cable until the back of the swivel contacts the stop (Fig. 46).

4. Tighten the cable clamp screw and check the engine RPM setting.

   High Idle: 2850 ± 50 RPM

   Low Idle: 1650 ± 100 RPM

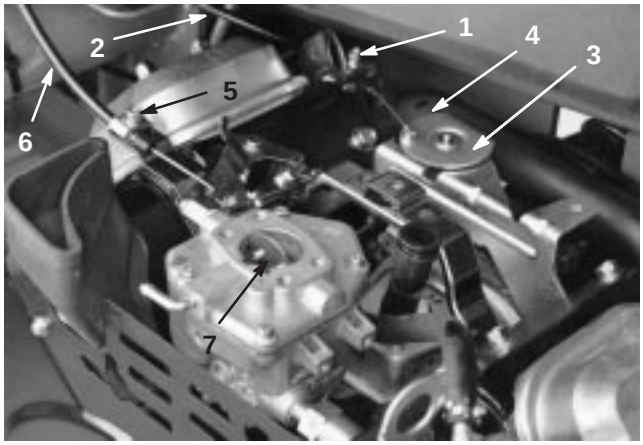

Figure 46

1. Throttle casing clamp screw
2. Throttle cable
3. Swivel
4. Stop
5. Choke casing clamp screw
6. Choke cable
7. Choke butterfly

Adjusting the Choke Control

1. Loosen the cable clamp screw securing the cable to the engine (Fig. 46).
2. Move the remote choke control lever forward to the Closed position.
3. Pull firmly on the choke cable until the choke butterfly is completely closed, then tighten the cable clamp screw (Fig. 46).

Adjusting the Carburetor and Speed Control

Important Before the carburetor and speed control are adjusted, the throttle and choke controls must be adjusted properly.

Warning

The engine must be running during adjustment of the carburetor and speed control. Contact with moving parts or hot surfaces may cause personal injury.

- **Shift into neutral and engage the parking brake before performing this procedure.**
- **Keep hands, feet, clothing, and other body parts away from the cutting blades, rotating parts, the muffler, and other hot surfaces.**

1. Start the engine and let it run at half throttle for approximately five minutes to warm up.
2. Move the throttle control to the Slow setting. Adjust the idle stop screw counterclockwise until it no longer contacts the throttle lever.
3. Bend the governed idle spring anchor tang (Fig. 47) to attain an idle speed of 1450±50 RPM. Check the speed with a tachometer.

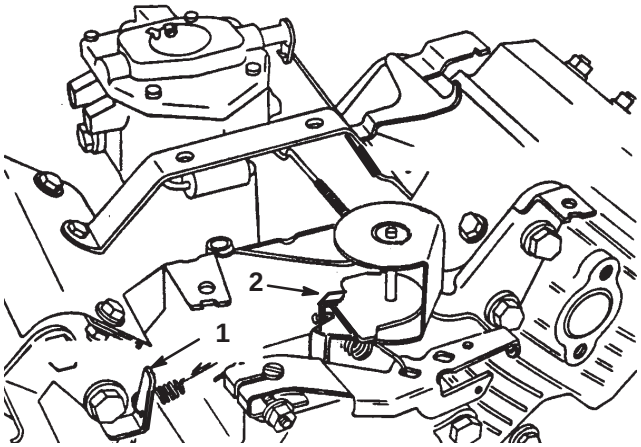

Figure 47

Shown with Air Cleaner Removed

1. Governed idle spring anchor tang
2. High speed spring anchor tang

4. Adjust the idle stop screw clockwise until the idle speed is 1650±100 RPM.
5. Move the throttle control to the Fast position. Bend the high speed spring anchor tang (Fig. 47) to attain a high speed of 2850±50 RPM.

Replacing the Spark Plugs

Replace the spark plugs after every 800 operating hours.

The recommended air gap is 0.030 in. (0.76 mm)

The correct spark plug to use is a Champion RC 14YC.

Note: The spark plug usually lasts a long time; however, the plug should be removed and checked whenever the engine malfunctions.

1. Clean the area around the spark plugs so foreign matter cannot fall into the cylinder when the spark plug is removed.
2. Pull the spark plug wires off of the spark plugs and remove the plugs from the cylinder head.
3. Check the condition of the side electrode, center electrode, and center electrode insulator to ensure that there is no damage.

Important A cracked, fouled, dirty, or otherwise malfunctioning spark plug must be replaced. Do not sand blast, scrape, or clean electrodes by using a wire brush because grit may eventually release from the plug and fall into the cylinder. The result is usually a damaged engine.

4. Set the air gap between the center and side of the electrodes at 0.030 in. (0.76 mm) (Fig. 48) Install the correctly gapped spark plug w/gasket seal, and tighten the plug to 200 in.-lb. (23 N·m). If a torque wrench is not used, tighten the plug firmly.

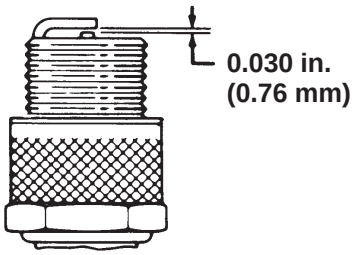

Figure 48

Replacing the Fuel Filter

An in-line filter is incorporated into the fuel line between the fuel tank and carburetor (Fig. 49). Replace the filter every 800 hours or sooner if the fuel flow is restricted. Be sure the arrow on the filter is pointing away from the fuel tank.

Danger

In certain conditions, gasoline is extremely flammable and highly explosive. A fire or explosion from gasoline can burn you and others and can damage property.

- **Drain gasoline from the fuel tank when the engine is cold. Do this outdoors in an open area. Wipe up any gasoline that spills.**
- **Never smoke when draining gasoline, and stay away from an open flame or where a spark may ignite the gasoline fumes.**

1. Close the fuel shut off valve, loosen the hose clamp (Fig. 49) on the carburetor side of filter and remove the fuel line from the filter.

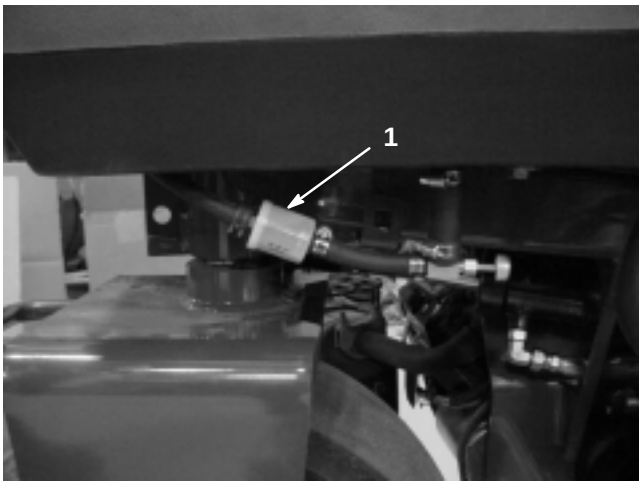

Figure 49

1. Fuel filter

2. Place a drain pan under the filter, loosen the remaining hose clamp, and remove the filter (Fig. 49).
3. Install the new filter with the arrow on the filter body pointing away from the fuel tank.

Changing the Hydraulic Oil and Filter

Change the hydraulic oil after every 800 operating hours.

If the oil becomes contaminated, contact your local Toro distributor because the system must be flushed. Contaminated oil looks milky or black when compared to clean oil.

Change the filter:

- After the first 50 operating hours
- After every 800 operating hours

1. Clean the area around the filter mounting area (Fig. 50). Place a drain pan under the filter and remove the filter.

Note: If the oil is not going to be drained, disconnect and plug the hydraulic line going to the filter.

2. Fill the replacement filter with high quality hydraulic fluid, lubricate the sealing gasket, and hand turn it until the gasket contacts the filter head. Then tighten 3/4 turn further.
3. Fill the hydraulic reservoir and small auxiliary tank with approximately 8–1/2 gallons (32 l) of hydraulic oil; refer to Checking the Hydraulic System, page 18.

4. Start the machine and run it at idle for 3 to 5 minutes to circulate the fluid and remove any air trapped in the system. Stop the machine and recheck the fluid level.

5. Dispose of the oil properly.

Note: If the leak detector alarm sounds, turn the key off and wait a few minutes for the oil level to equalize in the tanks. Recheck the fluid level and add oil, if required.

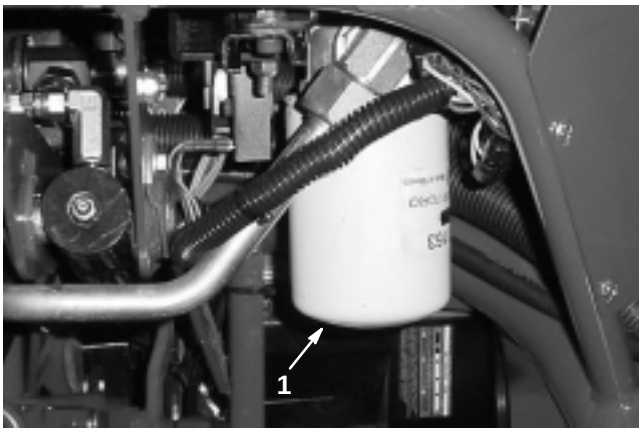

Figure 50

1. Hydraulic filter

Checking the Hydraulic Lines and Hoses

Warning

Hydraulic fluid escaping under pressure can penetrate skin and cause injury.

- **Make sure all hydraulic fluid hoses and lines are in good condition and all hydraulic connections and fittings are tight before applying pressure to the hydraulic system.**
- **Keep your body and hands away from pin hole leaks or nozzles that eject high pressure hydraulic fluid.**
- **Use cardboard or paper to find hydraulic leaks.**
- **Safely relieve all pressure in the hydraulic system before performing any work on the hydraulic system.**
- **Get immediate medical help if fluid is injected into skin.**

Check the hydraulic lines and hoses daily for leaks, kinked lines, loose mounting supports, wear, loose fittings, weather deterioration, and chemical deterioration. Make all necessary repairs before operating.

Adjusting the Brakes

A brake adjustment rod is located on each side of the machine so that the brakes can be equally adjusted. Adjust the brakes as follows:

1. While moving forward at transport speed depress the brake pedal; both wheels should lock equally.

Caution

Testing the brakes in a confined area where others are present could cause injury.

Always check the brakes in a wide, open-spaced, flat area which is free of other persons and obstructions before and after adjustment.

2. If the brakes do not lock equally, disconnect the brake rods by removing the cotter pin and clevis pin (Fig. 51).

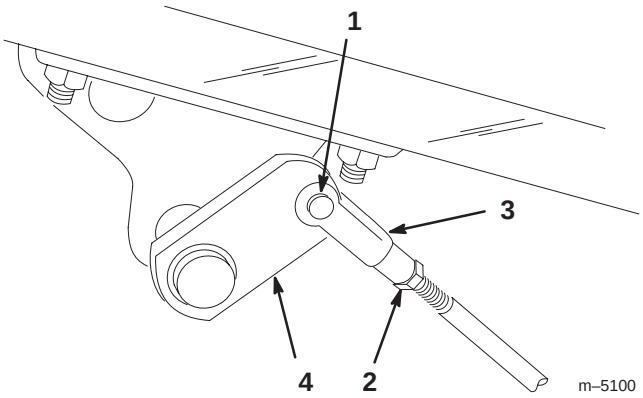

Figure 51

1. Clevis pin and cotter pin
2. Jam nut
3. Clevis
4. Brake shaft

3. Loosen the jam nut and adjust the clevis accordingly (Fig. 51).

4. Assemble the clevis to the brake shaft (Fig. 51).

5. Check the amount of free travel of the brake pedal when the adjustment is completed. There should be 1/2 to 1 in. (13 to 26 mm) travel before the brake shoes make contact with the brake drums. Readjust, if necessary, to achieve this setting.

6. While moving forward at transport speed depress the brake pedal; both wheels should lock equally. Readjust, if necessary.

7. It is recommended that the brakes be burnished annually; refer to Break-In Period, page 21.

Adjusting the Transmission for Neutral

If the machine creeps when the traction control pedal is in the neutral position, the neutral return mechanism must be adjusted.

1. Block up under the frame so that one of the front wheels is off of the floor.

Note: If machine is equipped with a 3 wheel drive kit, the rear wheel must be raised off the floor and blocked.

2. Start the engine, move the throttle to Slow, and check the front wheel that is off of the floor; it must not be rotating.
3. If the wheel is rotating, stop the engine and proceed as follows:

   A. Loosen both jam nuts securing the traction control cable to the bulkhead on the hydrostat (Fig. 52). Make sure the jam nuts are loosened equally and sufficiently to allow adjustment.

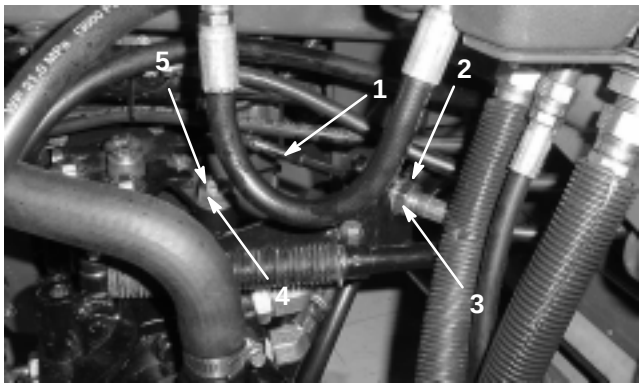

Figure 52

1. Traction cable
2. Bulkhead
3. Jam nuts
4. Eccentric
5. Locknut

Note: Loosen the nut securing the eccentric to the top of the hydrostat (Fig. 52).

   B. Move the functional control lever to Neutral and the throttle to Slow. Start the engine.

   C. Rotate the eccentric until creep does not occur in either direction. When the wheel stops rotating, tighten the nut locking the eccentric and the adjustment (Fig. 52). Verify the adjustment with the throttle in the Slow and Fast position.

   D. From each side of the bulkhead, tighten the locknuts **evenly**, securing the traction cable to the bulkhead (Fig. 52). Do not twist the cable.

Note: If cable tension exists when the functional control lever is in neutral, the machine may creep when the lever is moved to the Mow or Transport position.

Adjusting the Transport Speed

Obtaining Maximum Transport Speed

The traction pedal is adjusted for maximum transport speed at the factory, but an adjustment may be required if the pedal reaches full stroke before it contacts the pedal stop, or if a decrease in transport speed is desired.

To obtain maximum transport speed, put the functional control lever in the transport position and press down on the traction pedal. If the pedal contacts the stop (Fig. 53) before tension is felt on the cable, an adjustment is required:

1. Put the functional control lever in the transport position and loosen the locknut securing the pedal stop to the floor plate (Fig. 53).
2. Tighten the pedal stop until it does not contact the traction pedal.
3. Continue applying a light load on the transport pedal and adjust the pedal stop so it contacts the pedal rod and tighten the nuts.

Important The tension on the cable must not be excessive or cable life will be reduced.

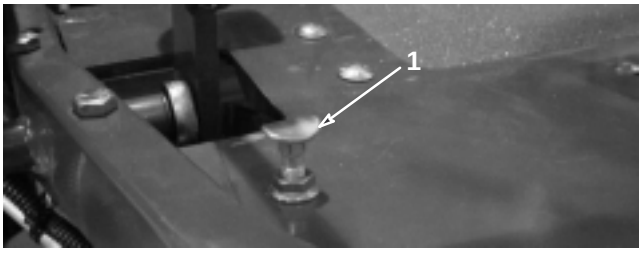

Figure 53

1. Pedal stop

Reducing Transport Speed

1. Press down on the traction pedal and loosen the locknut securing the pedal stop to the floor plate.
2. Loosen the pedal stop until the desired transport speed is obtained.
3. Tighten the locknut securing the pedal stop.

Adjusting the Mowing Speed

The machine is adjusted at the factory, but speed may be varied if desired.

1. Loosen jam nut on pedal lock capscrew (Fig. 54).

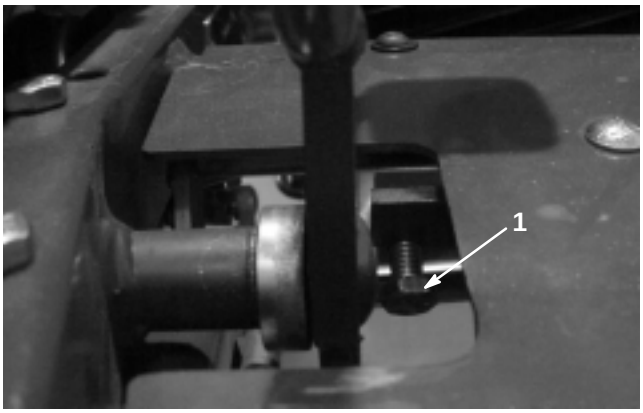

Figure 54

1. Pedal lock capscrew

2. Rotate capscrew clockwise to increase mowing speed and counterclockwise to decrease mowing speed.
3. Tighten jam nut and check ground speed. Readjust, if required.

Adjusting the Cutting Unit Lift/Drop

The cutting unit lift/drop circuit is equipped with a flow control valve (Fig. 55). This valve is preset at the factory at approximately 3 turns open, but an adjustment may be required to compensate for differences in hydraulic oil temperatures, mowing speeds, etc. If an adjustment is required, proceed as follows:

Note: Allow the hydraulic oil to reach full operating temperature before adjusting the flow control valve.

1. Raise the seat and locate the flow control valve for the center pull frame (Fig. 55) which is located next to the hydraulic manifold.
2. Loosen the set screw on the adjusting knob on the flow control.
3. Rotate the knob 1/4 turn counterclockwise if the center cutting unit is dropping too late or 1/4 turn clockwise if the center cutting unit is dropping too early.
4. After the desired setting has been achieved, tighten the set screw.

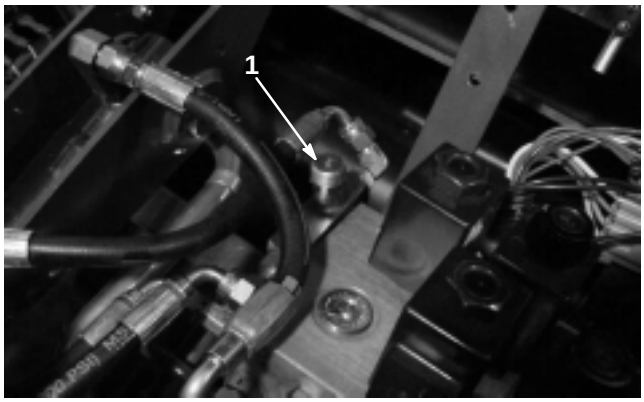

Figure 55

1. Flow control valve

Adjusting the Lift Cylinders

To regulate the height of the front cutting units when in the raised (transport) position, the front lift cylinders may be adjusted.

1. Lower the cutting units to the ground.
2. Loosen the jam nut, on the clevis, of the cutting unit lift cylinder that needs to be adjusted.
3. Disconnect the cylinder clevis from the lift arm.
4. Rotate the clevis until the desired height is attained.
5. Connect the cylinder clevis to the lift arm and tighten the jam nut.

Servicing the Battery

Warning

Battery posts, terminals, and related accessories contain lead and lead compounds, chemicals known to the State of California to cause cancer and reproductive harm. ***Wash hands after handling.***

Cleaning the Battery

Keep the top of the battery clean by washing it periodically with a brush dipped in ammonia or bicarbonate of soda solution. Flush the top surface with water after cleaning it. Do not remove the fill caps while cleaning the battery.

If corrosion occurs at the terminals, disconnect the cables, negative (–) cable first, and scrape the clamps and terminals separately. Reconnect the cables, positive (+) cable first, and coat the terminals with petroleum jelly.

Warning

Incorrect battery cable routing could damage the tractor and cables causing sparks. Sparks can cause the battery gasses to explode, resulting in personal injury.

- **Always *disconnect* the negative (black) battery cable before disconnecting the positive (red) cable.**
- **Always *connect* the positive (red) battery cable before connecting the negative (black) cable.**

The battery cables must be tight on the terminals to provide good electrical contact.

Checking the Electrolyte Level

The battery electrolyte level must be properly maintained. Check the electrolyte level every 50 operating hours or every 30 days when in storage.

Danger

Battery electrolyte contains sulfuric acid which is a deadly poison and causes severe burns.

- **Do not drink electrolyte and avoid contact with skin, eyes or clothing. Wear safety glasses to shield your eyes and rubber gloves to protect your hands.**
- **Fill the battery where clean water is always available for flushing the skin.**

Maintain the cell level with distilled or demineralized water. Do not fill the cells above the bottom of the split ring inside each cell.

Servicing the Fuses

The fuses in the machine's electrical system are located under the seat (Fig. 56).

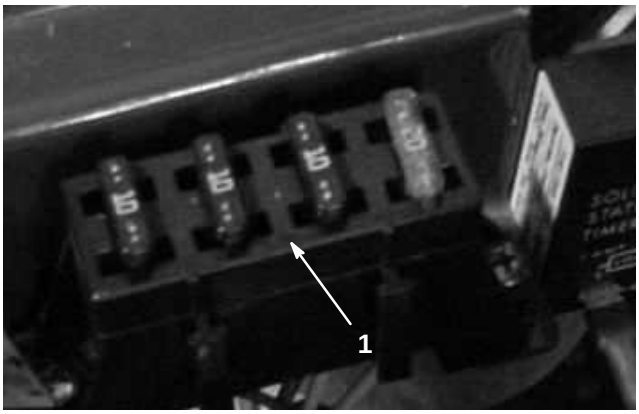

Figure 56

1. Fuses

Storing the Machine

If you wish to store the machine for a long period of time, the following steps should be performed prior to storage:

1. Remove accumulations of dirt and old grass clippings. Sharpen the reels and bedknives, if necessary; refer to the Cutting Unit Operator's Manual. Use a rust preventive on bedknives and reel blades. Grease and oil all lubrication points; refer to Lubrication, page 29.
2. Block up the wheels to remove any weight on the tires.
3. Drain and replace the hydraulic fluid and filter and inspect the hydraulic lines and fittings. Replace, if necessary; refer to Changing the Hydraulic Oil and Filter, page 34 and Checking the Hydraulic Lines and Hoses, page 35.
4. All fuel should be removed from the fuel tank. Run the engine until it stops from lack of fuel. The small amount of fuel that remains in the bottom of the tank should be removed by absorbing it with a clean dry cloth. Replace the fuel filter; refer to Replacing the Fuel Filter, page 34.
5. While the engine is still warm, drain the oil from the crankcase. Refill it with fresh oil; refer to Changing the Engine Oil and Filter, page 31.
6. Remove the spark plugs, pour one ounce of SAE 30 oil into the cylinders, and crank slowly to distribute the oil. Replace the spark plugs; refer to Replacing the Spark Plugs, page 33.
7. Clean dirt and chaff from the cylinder, cylinder head fins, and blower housing.
8. If the machine will be stored for more than 30 days, remove the battery and charge it fully. Either store it on the shelf or on the machine. Leave the cables disconnected if it is stored on the machine. Store the battery in a cool atmosphere to avoid quick deterioration of the charge in the battery. To prevent the battery from freezing, make sure it is fully charged. The specific gravity of a fully charge battery is 1.265–1.299.

   Check the electrolyte level every 30 days.
9. If possible, store the machine in a warm, dry location.

Electrical Schematic

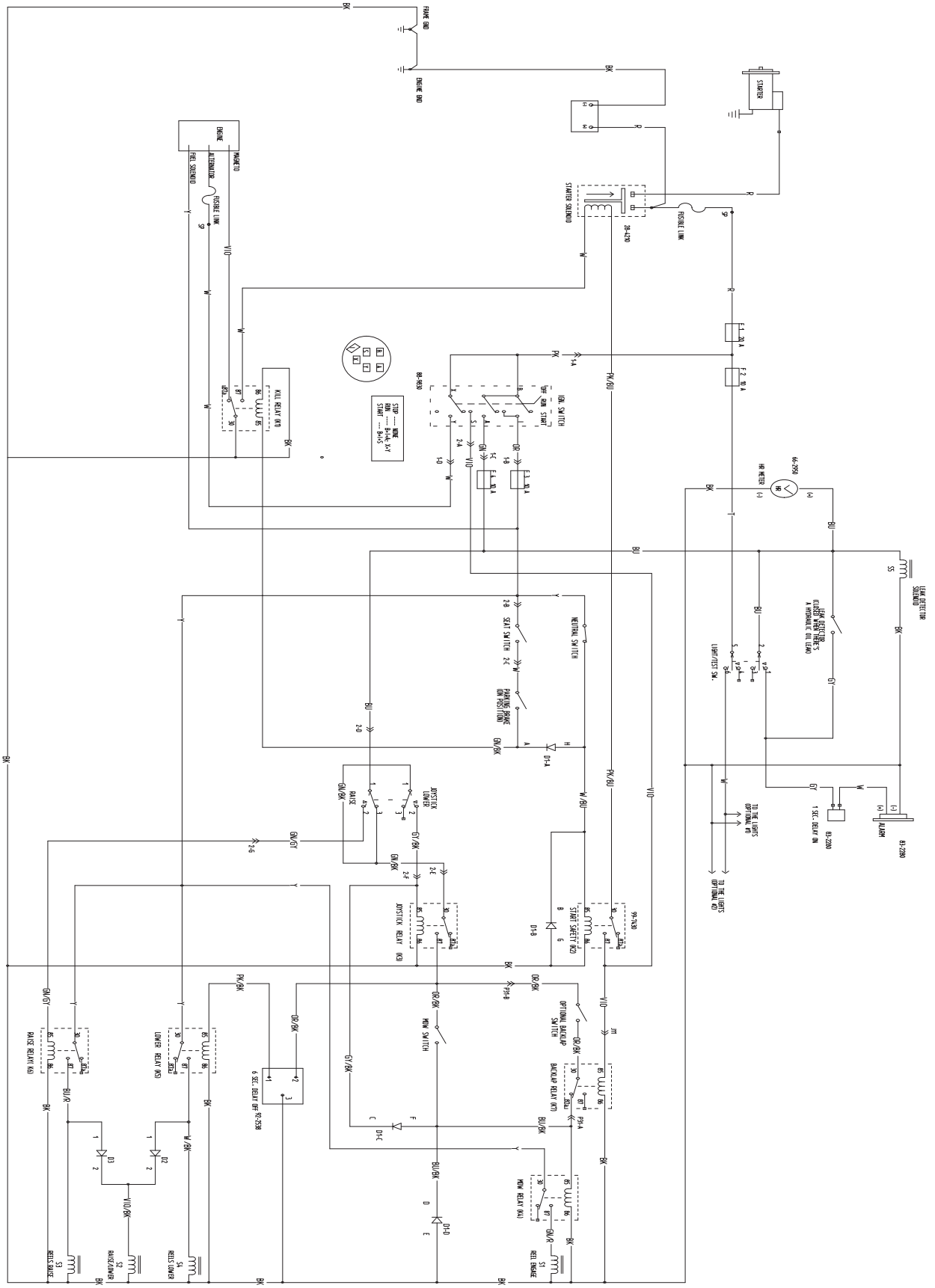

Hydraulic Schematic

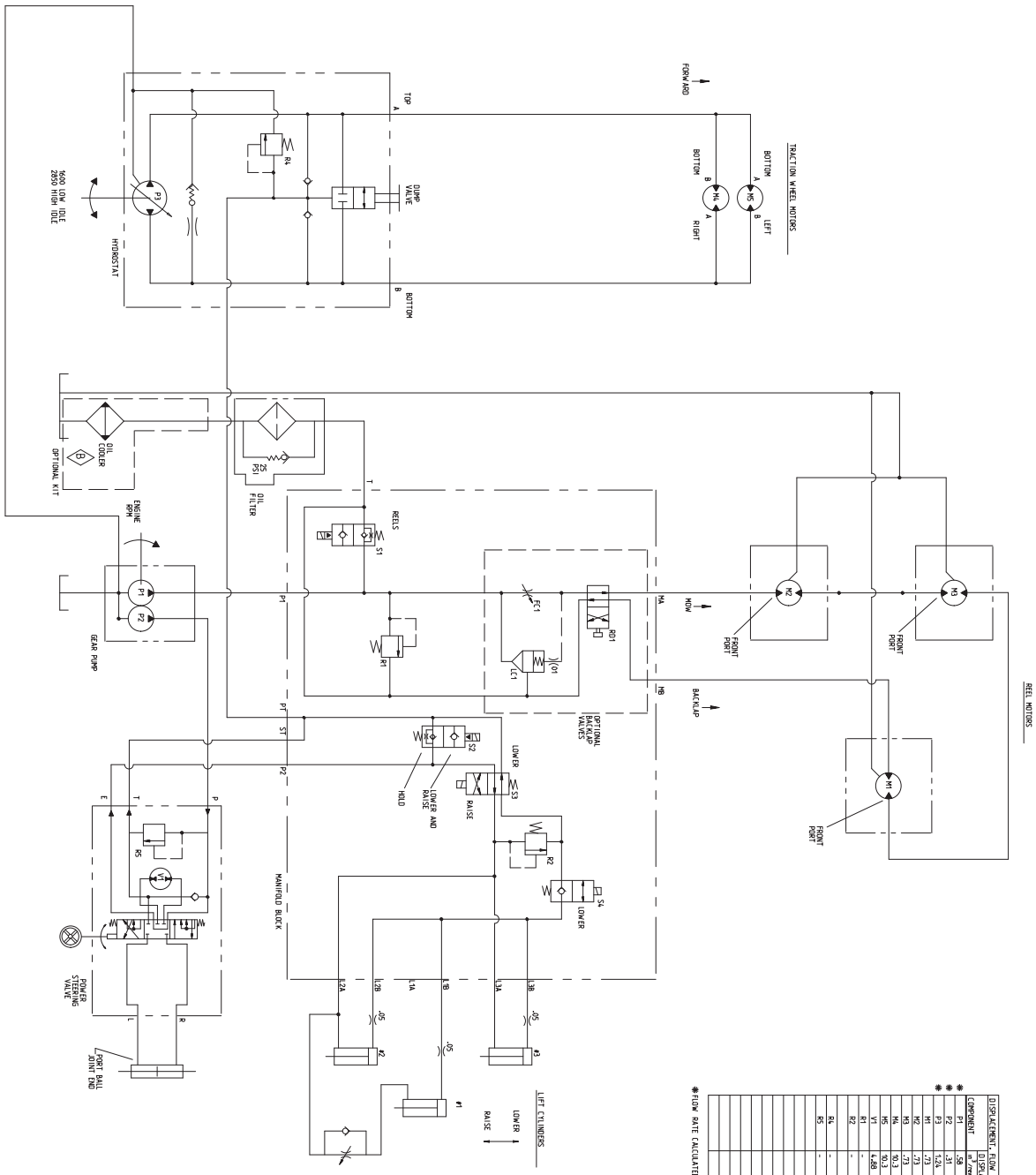

DISPLACEMENT, FLOW RATE, AND PRESSURE CHART						
COMPONENT	DISPLACEMENT in^3/rev	DISPLACEMENT cm^3/rev	PRESSURE lbs/in^2	PRESSURE BARS	FLOW RATE GPM	FLOW RATE LPM
P1	.58	9.5	-	-	6.9	26.1
P2	.31	5.1	-	-	3.7	13.9
P3	1.24	20.3	-	-	14.8	55.8
M1	.73	12.0	-	-	-	-
M2	.73	12.0	-	-	-	-
M3	.73	12.0	-	-	-	-
M4	90.3	1480.0	-	-	-	-
M5	90.3	1480.0	-	-	-	-
V1	4.88	80	-	-	-	-
R1	-	-	2400	166	-	-
R2	-	-	300	21	-	-
R4	-	-	300	7	-	-
R5	-	-	1150	79	-	-

* FLOW RATE CALCULATED AT 2800 RPM AND 98% EFFICIENCY

The Toro General Commercial Products Warranty

A Two-Year Limited Warranty

Conditions and Products Covered

The Toro Company and its affiliate, Toro Warranty Company, pursuant to an agreement between them, jointly warrant your 1996 or newer Toro Commercial Product ("Product") purchased after January 1, 1997, to be free from defects in materials or workmanship for two years or 1500 operational hours*, whichever occurs first. Where a warrantable condition exists, we will repair the Product at no cost to you including diagnosis, labor, parts, and transportation. This warranty begins on the date the Product is delivered to the original retail purchaser.

* Product equipped with hour meter

Instructions for Obtaining Warranty Service

You are responsible for notifying the Commercial Products Distributor or Authorized Commercial Products Dealer from whom you purchased the Product as soon as you believe a warrantable condition exists.

If you need help locating a Commercial Products Distributor or Authorized Dealer, or if you have questions regarding your warranty rights or responsibilities, you may contact us at:

Toro Commercial Products Service Department
Toro Warranty Company
8111 Lyndale Avenue South
Bloomington, MN 55420-1196
952-888-8801 or 800-982-2740
E-mail: commercial.service@toro.com

Owner Responsibilities

As the Product owner, you are responsible for required maintenance and adjustments stated in your operator's manual. Failure to perform required maintenance and adjustments can be grounds for disallowing a warranty claim.

Items and Conditions Not Covered

Not all product failures or malfunctions that occur during the warranty period are defects in materials or workmanship. This express warranty does not cover the following:

- Product failures which result from the use of non-Toro replacement parts, or from installation and use of add-on, modified, or unapproved accessories
- Product failures which result from failure to perform required maintenance and/or adjustments
- Product failures which result from operating the Product in an abusive, negligent or reckless manner
- Parts subject to consumption through use unless found to be defective. Examples of parts which are consumed, or used up, during normal Product operation include, but are not limited to, blades, reels, bedknives, tines, spark plugs, castor wheels, tires, filters, belts, etc.
- Failures caused by outside influence. Items considered to be outside influence include, but are not limited to, weather, storage practices, contamination, use of unapproved coolants, lubricants, additives, or chemicals, etc.
- Normal "wear and tear" items. Normal "wear and tear" includes, but is not limited to, damage to seats due to wear or abrasion, worn painted surfaces, scratched decals or windows, etc.

Parts

Parts scheduled for replacement as required maintenance are warranted for the period of time up to the scheduled replacement time for that part.

Parts replaced under this warranty become the property of Toro. Toro will make the final decision whether to repair any existing part or assembly or replace it. Toro may use factory remanufactured parts rather than new parts for some warranty repairs.

General Conditions

Repair by an Authorized Toro Distributor or Dealer is your sole remedy under this warranty.

Neither The Toro Company nor Toro Warranty Company is liable for indirect, incidental or consequential damages in connection with the use of the Toro Products covered by this warranty, including any cost or expense of providing substitute equipment or service during reasonable periods of malfunction or non-use pending completion of repairs under this warranty. Except for the Emissions warranty referenced below, if applicable, there is no other express warranty. All implied warranties of merchantability and fitness for use are limited to the duration of this express warranty.

Some states do not allow exclusions of incidental or consequential damages, or limitations on how long an implied warranty lasts, so the above exclusions and limitations may not apply to you.

This warranty gives you specific legal rights, and you may also have other rights which vary from state to state.

Note regarding engine warranty: The Emissions Control System on your Product may be covered by a separate warranty meeting requirements established by the U.S. Environmental Protection Agency (EPA) and/or the California Air Resources Board (CARB). The hour limitations set forth above do not apply to the Emissions Control System Warranty. Refer to the Engine Emission Control Warranty Statement printed in your operator's manual or contained in the engine manufacturer's documentation for details.

Countries Other than the United States or Canada

Customers who have purchased Toro products exported from the United States or Canada should contact their Toro Distributor (Dealer) to obtain guarantee policies for your country, province, or state. If for any reason you are dissatisfied with your Distributor's service or have difficulty obtaining guarantee information, contact the Toro importer. If all other remedies fail, you may contact us at Toro Warranty Company.

Part No. 374-0031 Rev. –