Form No. 3463-482 Rev A

TORO®

Count on it.

Parts Catalog

Sand Pro® 2040Z

Traction Unit

Model No. 08706—Serial No. 411920000 and Up

Register at www.Toro.com.
Original Instructions (EN)

CE

3463-482 A

Ordering Replacement Parts

To order replacement parts, please supply the part number, the quantity, and the description of each part desired.

Understanding Reference Numbers

Each identified part in an illustration has a reference number. The reference number for a part also appears in the parts list, along with other information about the part.

This catalog uses two special reference number formats, one to indicate parts in a service assembly and another to indicate the quantity of a given part in an illustration.

Service Assembly Reference Numbers

Parts in service assemblies have reference numbers in the form a:b. The a represents the reference number of the entire service assembly and the b represents a sequential number unique to each part within the service assembly.

For example, a wheel assembly might be identified by reference number 6, the tire by 6:1, the valve by 6:2, and the wheel by 6:3. When you order the assembly identified by reference number 6, you receive all parts identified by reference numbers 6:1,6:2, and 6:3. However, you may also order any part individually. Reference numbers of this type appear in illustration and in parts lists.

Reference Numbers Indicating Quantity

In an illustration, if a reference number indicates more than one part, the reference number has the form nX y. The n represents the quantity of the part, the X is the multiplication symbol, and the y represents the reference number.

For example, in an illustration, the reference number 2X 37 means that two of the parts identified by reference number 37 are indicated.

Contents

Main Frame Assembly 4
Tire and Caster Assembly 5
Engine and Transmission Assembly 6
Pump Idler Assembly No. 116-1255 8
LH Transmission Assembly No. 138-9088 10
RH Transmission Assembly No. 138-9090 12
Hydraulic Tank Assembly 14
Hydraulic Manifold Assembly No. 127-7858 16
Exhaust Assembly 17
Fuel Tank and Emissions Recovery Assembly 18
Engine Controls and Console Assembly 19
Seat Assembly 20
Seat Assembly No. 144-1371 21
Motion Control Assembly 22
Brake Installation Assembly 24
Lift Valve Installation Assembly 25
Hydraulic Cylinder Assembly No. 125-6466 26
Roll-Over Protection System Assembly 27
Battery and Electrical System Assembly 28
Attachments and Accessories 30

© 2023—The Toro® Company
8111 Lyndale Avenue South
Bloomington, MN 55420

Contact us at www.Toro.com.
Printed in the USA.
All Rights Reserved

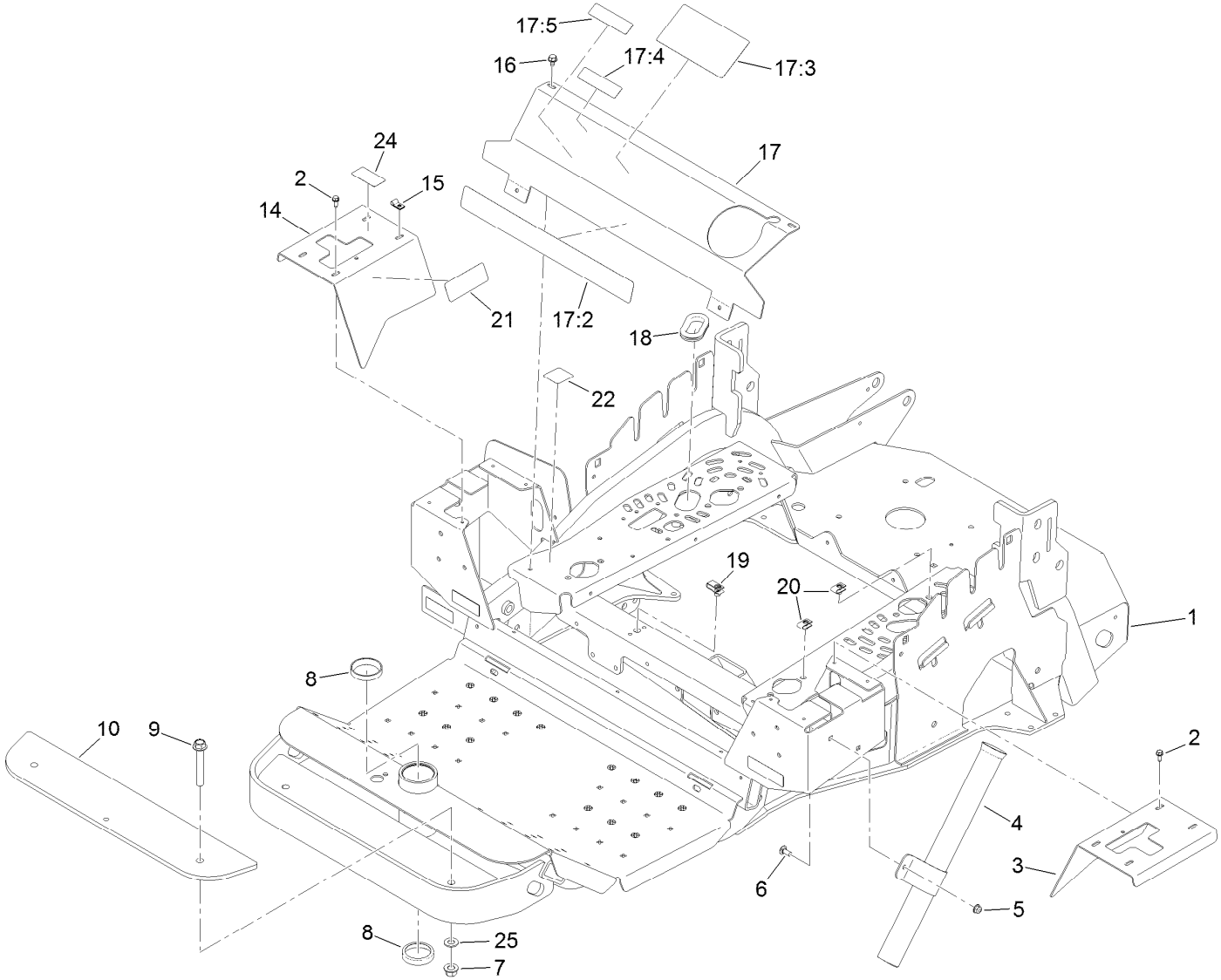

Main Frame Assembly

Ref.	Part Number	Qty.	Description
1	138-2217	1	Frame
2	32144-10	8	Screw-HWH
3	125-2409-03	1	Cover-Control, LH
4	127-0353-03	1	Holder-Rake
5	104-8300	2	Nut-HF, NI
6	3230-23	2	Bolt-CARR
7	99-5107	2	Nut-Lock
8	254-107	2	Cup-Bearing, Tapered
9	114-8419	2	Screw-HHF
10	125-5133-03	4	Bumper-Weight
14	125-2410-03	1	Cover-Control, RH
15	2412-72	1	Clip-Closed, Insulated
16	9266934	4	Screw

Ref.	Part Number	Qty.	Description
17	127-7888	1	Front Cover ASM
17:2	127-4149	1	Decal-Sand Pro 2040Z
17:3	132-4412	1	Decal-Danger
17:4	133-8062	1	Decal-Arrestor, Spark
17:5	127-7868	1	Decal-Attachment Warning
18	240-12	2	Grommet-Rubber
19	127-8408	2	Nut-U
20	115-7721	4	Nut-Clip, U
21	109-7232	2	Decal-Motion Control
22	116-5944	1	Decal-Park Brake
24	127-0365	1	Decal-Attachment Control
25	3256-26	2	Washer-Flat

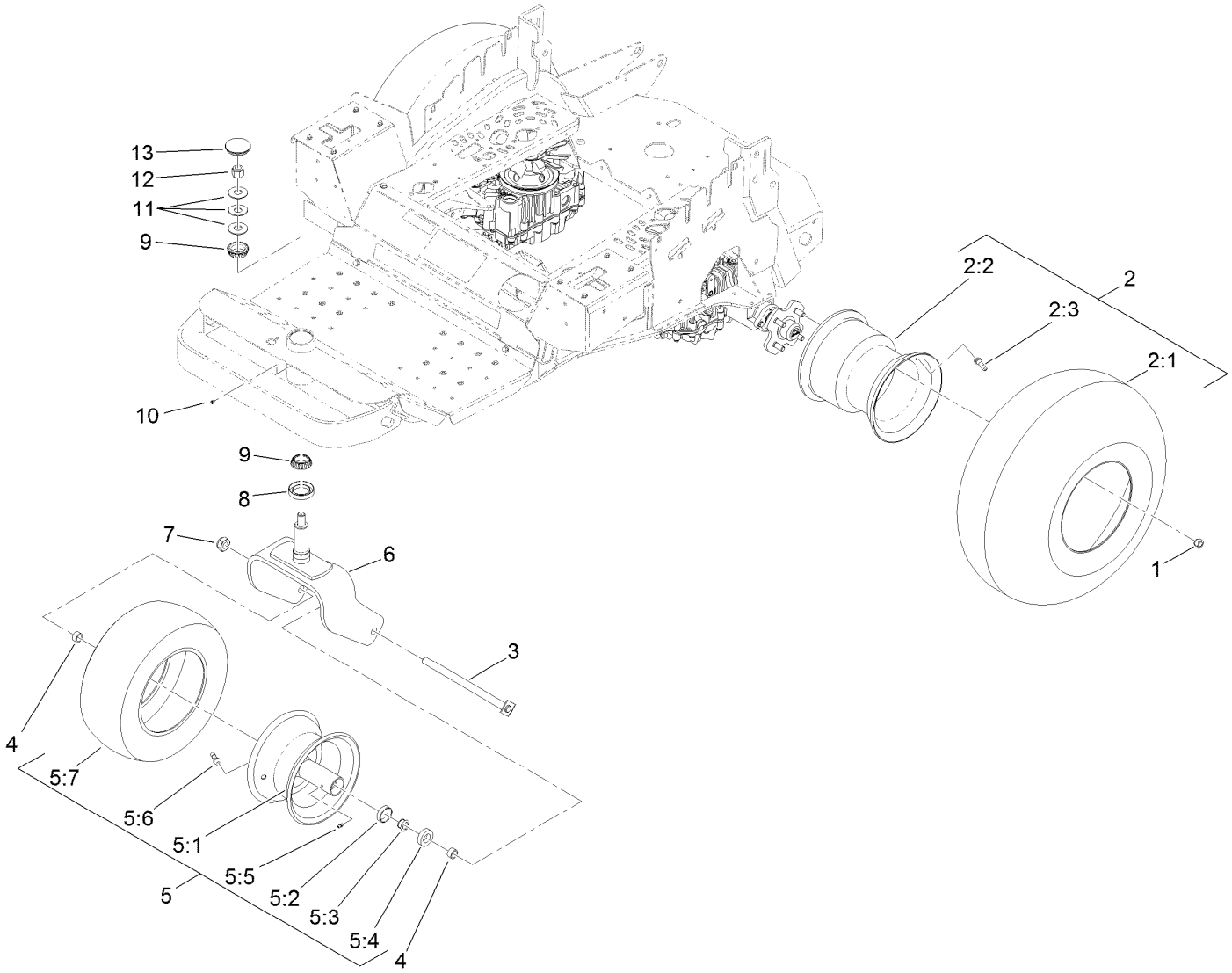

Tire and Caster Assembly

Ref.	Part Number	Qty.	Description
1	242-50	8	Nut-Lug
2	121-8069	2	Tire ASM
2:1	125-6465	1	Tire
2:2	125-6464	1	Rim
2:3	232-27	1	Stem-Valve
3	5-3934	1	Bolt-Caster
4	74-3730	2	Spacer-Spindle, Rear
5	125-2406	1	Tire ASM
5:1	125-6405	1	Rim ASM
5:2	254-79	2	Bearing-Roller, Cup
5:3	254-78	2	Bearing-Cone
5:4	253-111	2	Seal-Oil

Ref.	Part Number	Qty.	Description
5:5	302-5	1	Fitting-Grease
5:6	232-27	1	Stem-Valve
5:7	125-6406	1	Tire
6	125-2382-01	1	Caster
7	3296-67	1	Nut-Lock, NI
8	69-2980	1	Seal
9	254-106	2	Cone-Bearing, Tapered
10	1-811010	1	Plug
11	108-9957	3	Washer-Belleville
12	3296-51	1	Nut-Lock, NI
13	108-9950	1	Cap-Grease

Engine and Transmission Assembly

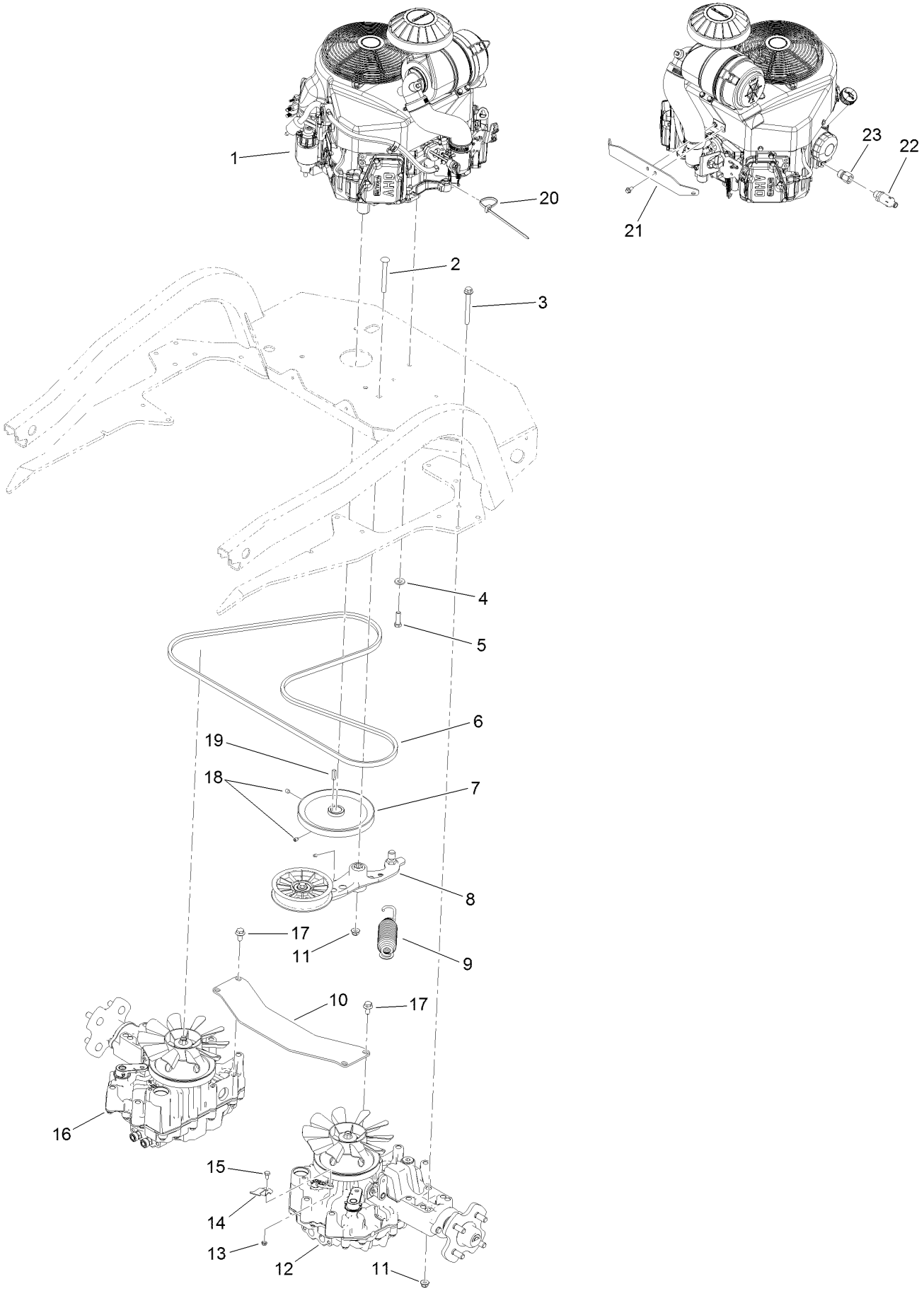

Engine and Transmission Assembly (continued)

Ref.	Part Number	Qty.	Description
1		1	Engine-Kawasaki, Fx481 ●■
2	3231-41	1	Bolt-Carriage
3	116-4701	16	Screw-HHF
4	98-5975	4	Washer-Belleville
5	323-7	4	Screw-HH
6	120-5772	1	Belt-V
7	120-5779	1	Pulley
8	116-1255	1	Pump Idler ASM
9	127-0351	1	Spring-Extension
10	125-2435-03	1	Crossmember-Hydro
11	104-8301	17	Nut-HF, NI
12	138-9088	1	LH Transmission ASM
13	3296-56	2	Nut-Lock, NI
14	127-0390	2	Lever-Valve, Tow
15	321-2	2	Screw-HH
16	138-9090	1	RH Transmission ASM
17	33105-020	4	Screw-HHF
18	3246-3	2	Screw-HSH
19	1-807259	1	Key
20	3290-378	1	Tie-Cable
21	130-2635-03	1	Bracket-Shroud
22	92-6877	1	Valve-Drain, Oil
23	103-1966	1	Adapter-STR

● Not serviced separately

■ Obtain parts from www.kawpower.com

Pump Idler Assembly No. 116-1255

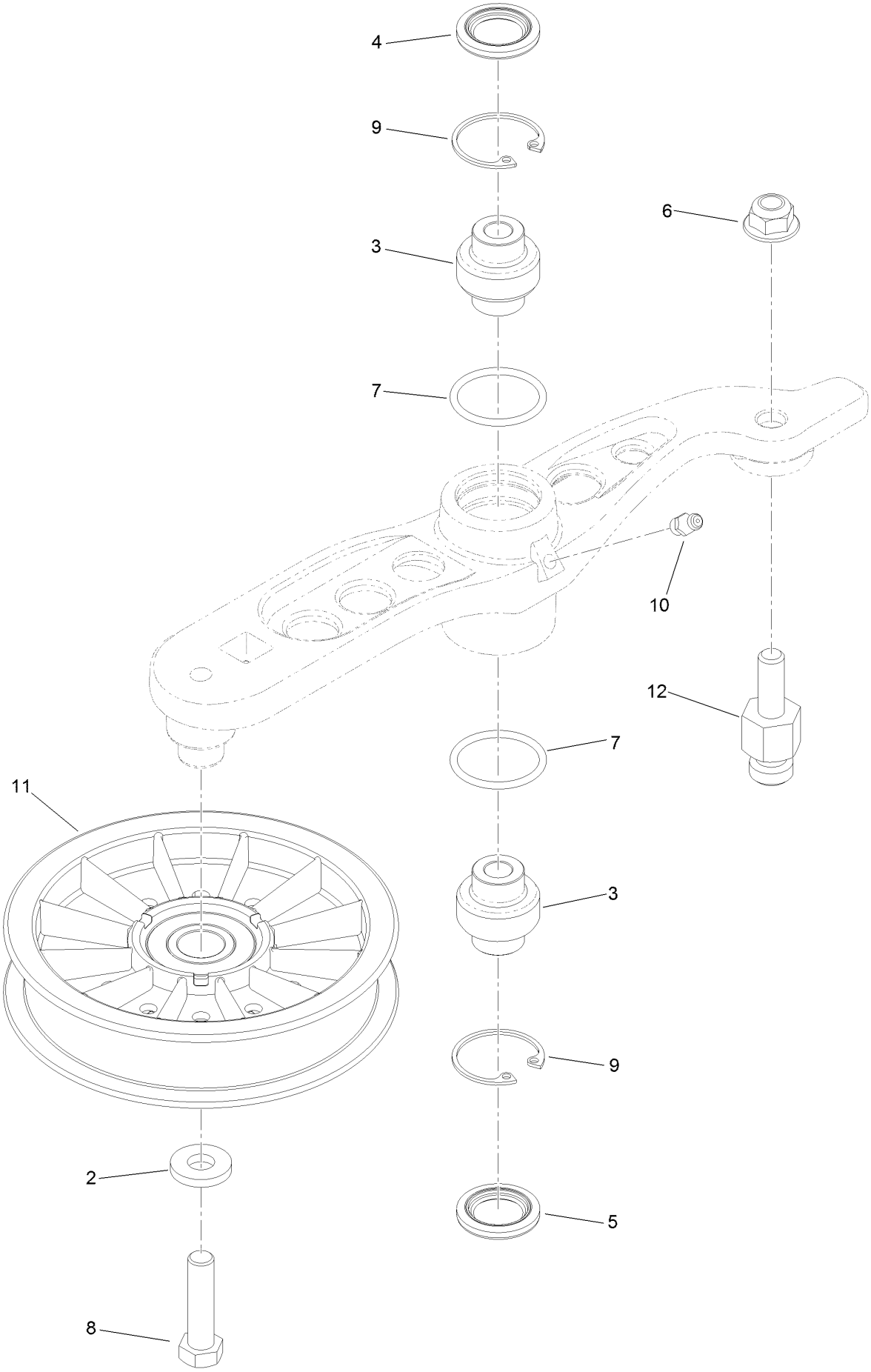

Pump Idler Assembly No. 116-1255 (continued)

Ref.	Part Number	Qty.	Description
2	43-0940	1	Spacer
3	103-3504	2	Bearing-Spherical
4	103-3505	1	Seal-Lip, Double
5	103-3506	1	Seal-Lip, Single
6	109-6658	1	Nut-Flange, NI
7	106-7159	2	O-Ring
8	323-8	1	Screw-HH
9	32120-10	2	Ring-Snap
10	302-19	1	Fitting-Grease
11	109-8076	1	Pulley-Idler
12	132-4724	1	Pin-Anchor, Spring

LH Transmission Assembly No. 138-9088

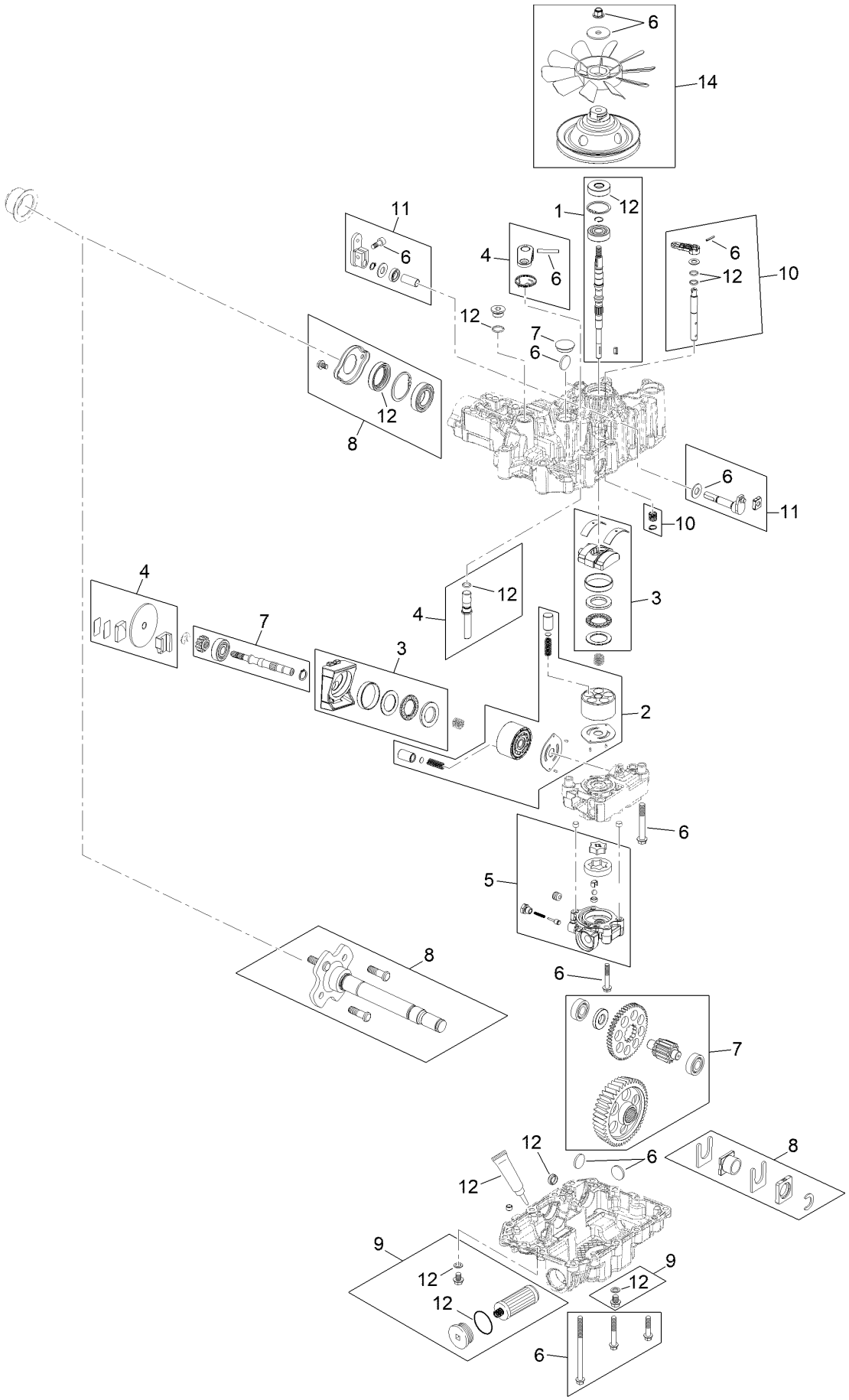

LH Transmission Assembly No. 138-9088 (continued)

Ref.	Part Number	Qty.	Description
1	127-0372	1	Input Shaft Kit
2	127-0373	1	Pump/Motor Kit
3	127-0374	1	Thrust Bearing Kit
4	130-2607	1	Left Brake Kit
5	127-0376	1	LH Charge Pump Kit
6	127-0378	1	Fastener Kit
7	127-0379	1	Drive Gear Kit
8	138-9110	1	Axle Shaft Kit
9	144-3842	1	2 Transmission Filter Kit
10	127-0383	1	Bypass Valve Kit
11	127-0384	1	LH Trunion Kit
12	130-7888	1	Seal Kit
14	127-0388	1	Pulley/Fan Kit

RH Transmission Assembly No. 138-9090

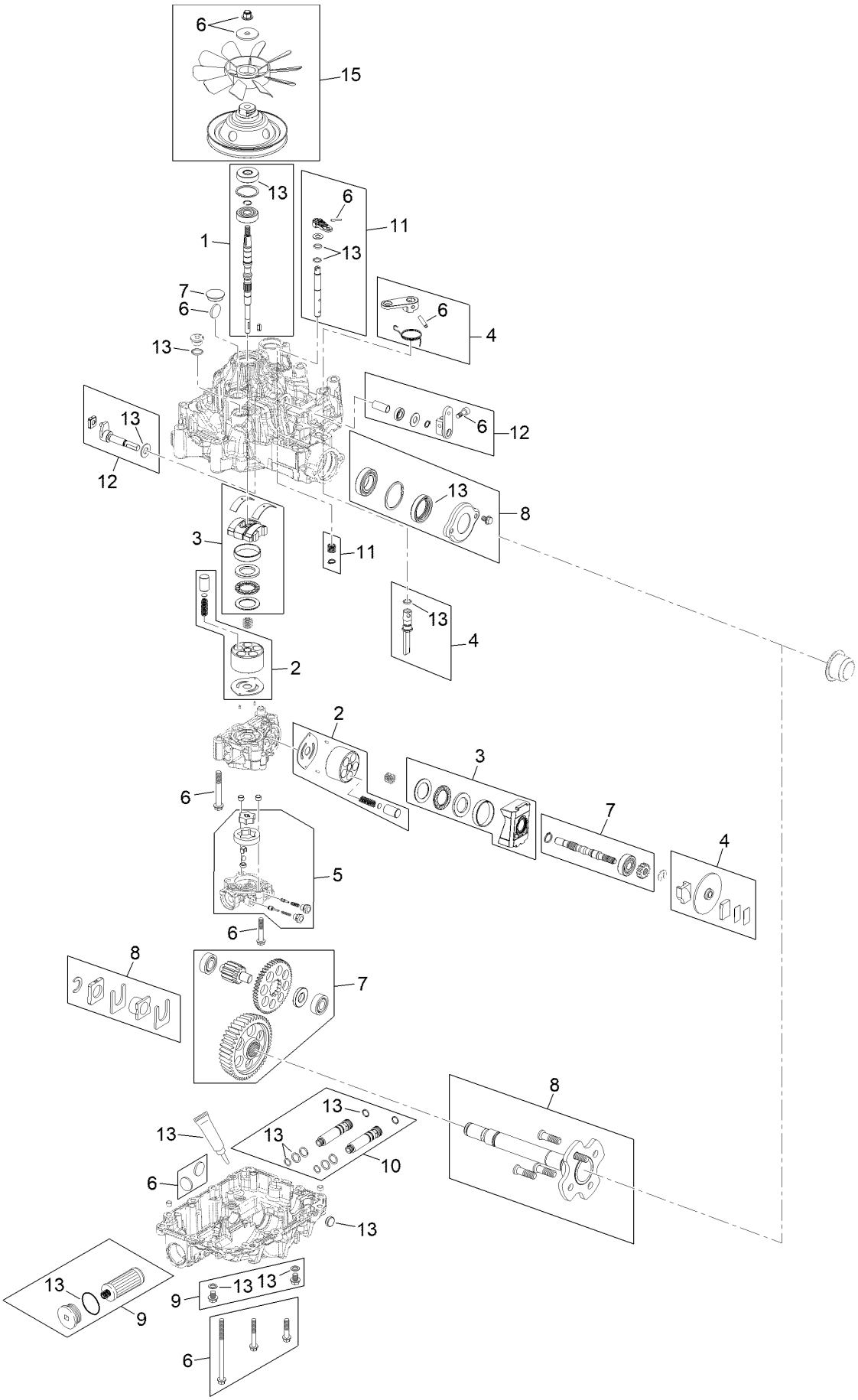

RH Transmission Assembly No. 138-9090 (continued)

Ref.	Part Number	Qty.	Description
1	127-0372	1	Input Shaft Kit
2	127-0373	1	Pump/Motor Kit
3	127-0374	1	Thrust Bearing Kit
4	127-0375	1	Right Brake Kit
5	127-0377	1	RH Charge Pump Kit
6	127-0378	1	Fastener Kit
7	127-0379	1	Drive Gear Kit
8	138-9110	1	Axle Shaft Kit
9	144-3842	1	2 Transmission Filter Kit
10	127-0382	1	Auxiliary Port Kit
11	127-0383	1	Bypass Valve Kit
12	127-0385	1	RH Trunion Kit
13	130-7888	1	Seal Kit
15	127-0388	1	Pulley/Fan Kit

Hydraulic Tank Assembly

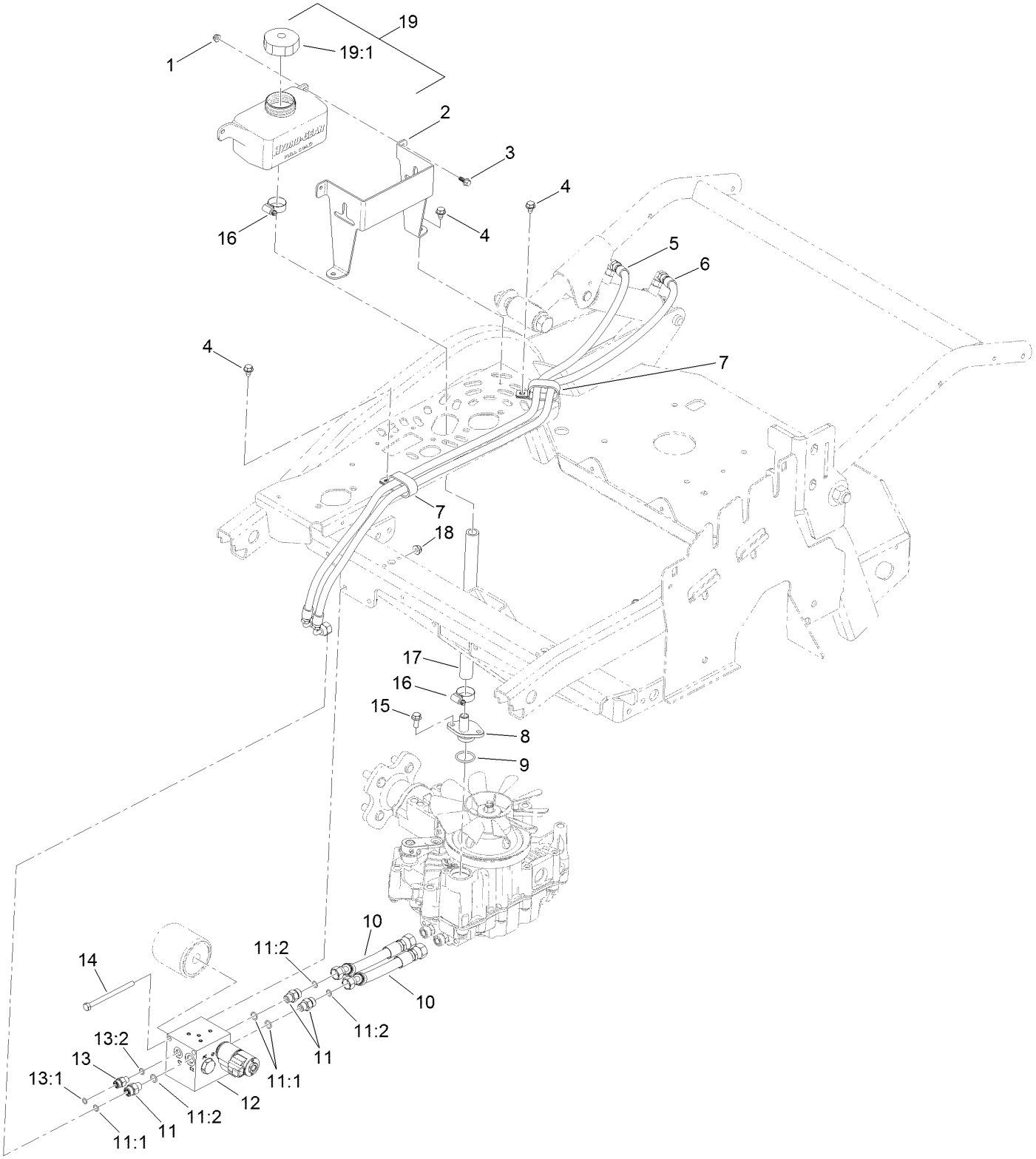

Hydraulic Tank Assembly (continued)

Ref.	Part Number	Qty.	Description
1	104-7201	4	Nut-HF, NI
2	125-2438-03	2	Bracket-Tank
3	99-6810	4	Screw-HHF
4	9266934	6	Screw
5	125-5124	1	HYD Hose ASM
6	125-5125	1	HYD Hose ASM
7	2412-137	2	Clamp-R, Double
8	125-2449	2	Fitting-Hydro
9	130-2615	2	O-Ring
10	127-7877	2	HYD Hose ASM
11	340-2	3	Fitting-Straight
11:1	237-22	1	O-Ring
11:2	237-42	1	O-Ring
12	127-7858	1	Hydraulic Manifold ASM (With Filter)
13	340-92	1	Fitting-Straight
13:1	237-78	1	O-Ring
13:2	237-21	1	O-Ring
14	322-38	2	Screw-HH
15	98-7977	2	Screw-HHF
16	2412-129	4	Clamp-Hose
17	127-0368	2	Hose-Push Lok
18	104-8300	2	Nut-HF, NI
19	119-9908	2	Hydraulic Reservoir ASM
19:1	109-3320	1	Cap-Reservoir, HYD

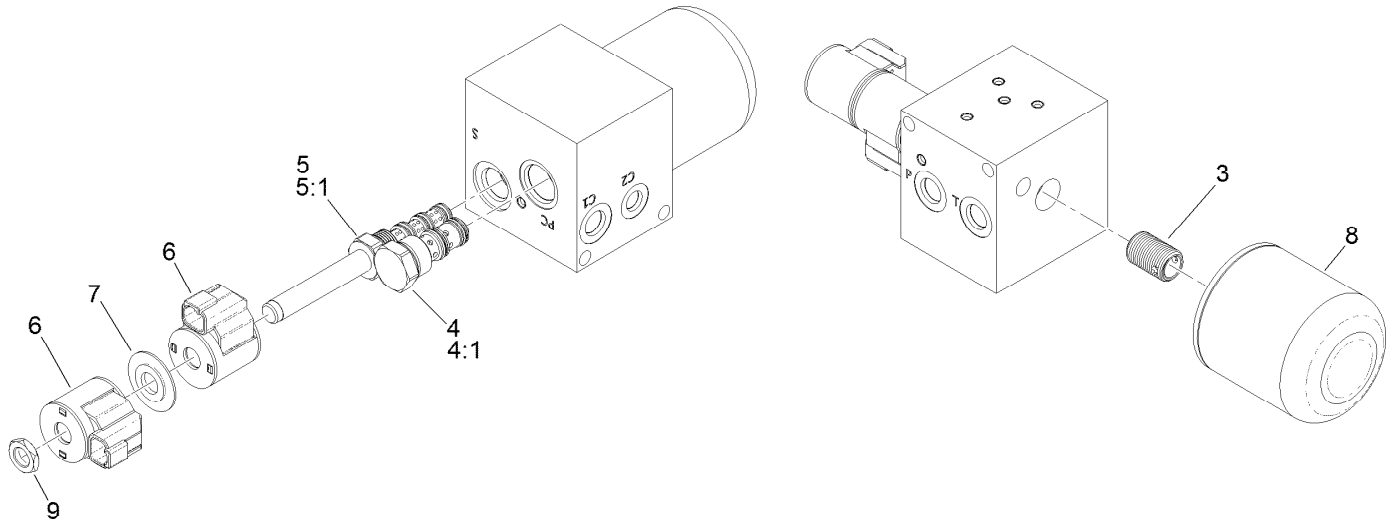

Hydraulic Manifold Assembly No. 127-7858

Ref.	*Part Number*	*Qty.*	*Description*
3	127-3885	1	Nipple-Filter
4	127-3884	1	Valve-Check
4:1	105-9154	1	Seal Kit
5	127-3883	1	Valve-Solenoid
5:1	112-6520	1	Seal Kit
6	119-8036	2	Coil
7	120-2586	1	Spacer-Coil
8	114-3494	1	Element-Filter, 25 Micron
9	110-2634	1	Nut-Coil

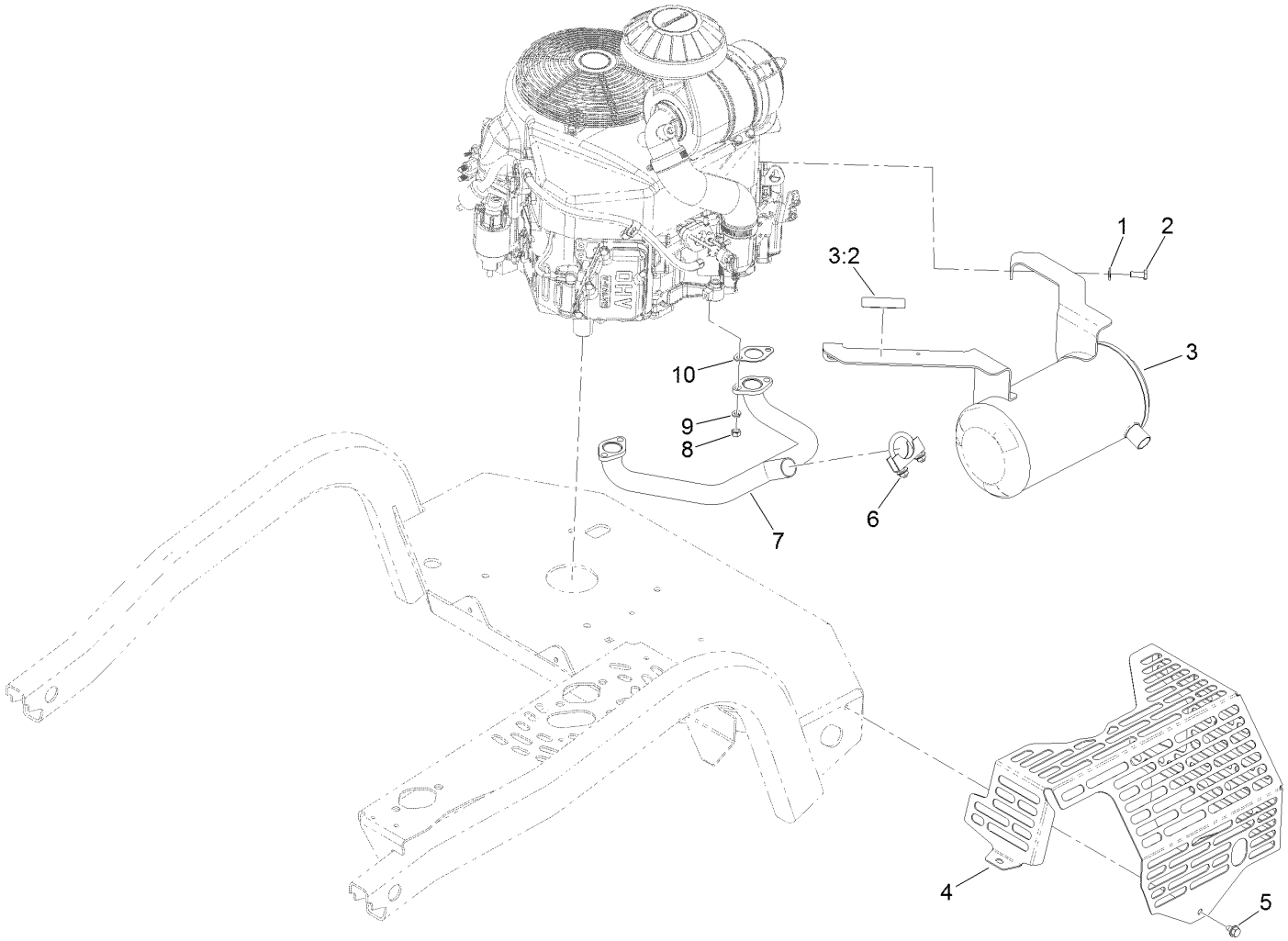

Exhaust Assembly

Ref.	Part Number	Qty.	Description
1	1-303334	2	Washer-Spring
2	33114-020	2	Screw-HH
3	127-7889	1	Muffler ASM
3:2	127-0392	1	Decal-Hot Surface
4	127-0367-03	1	Shield-Muffler
5	9266934	2	Screw
6	104-4090	1	Clamp-Muffler
7	125-2401	1	Manifold-Exhaust
8	114-3549	4	Nut
9	114-3550	4	Washer-Lock
10	1-653313	2	Gasket-Exhaust

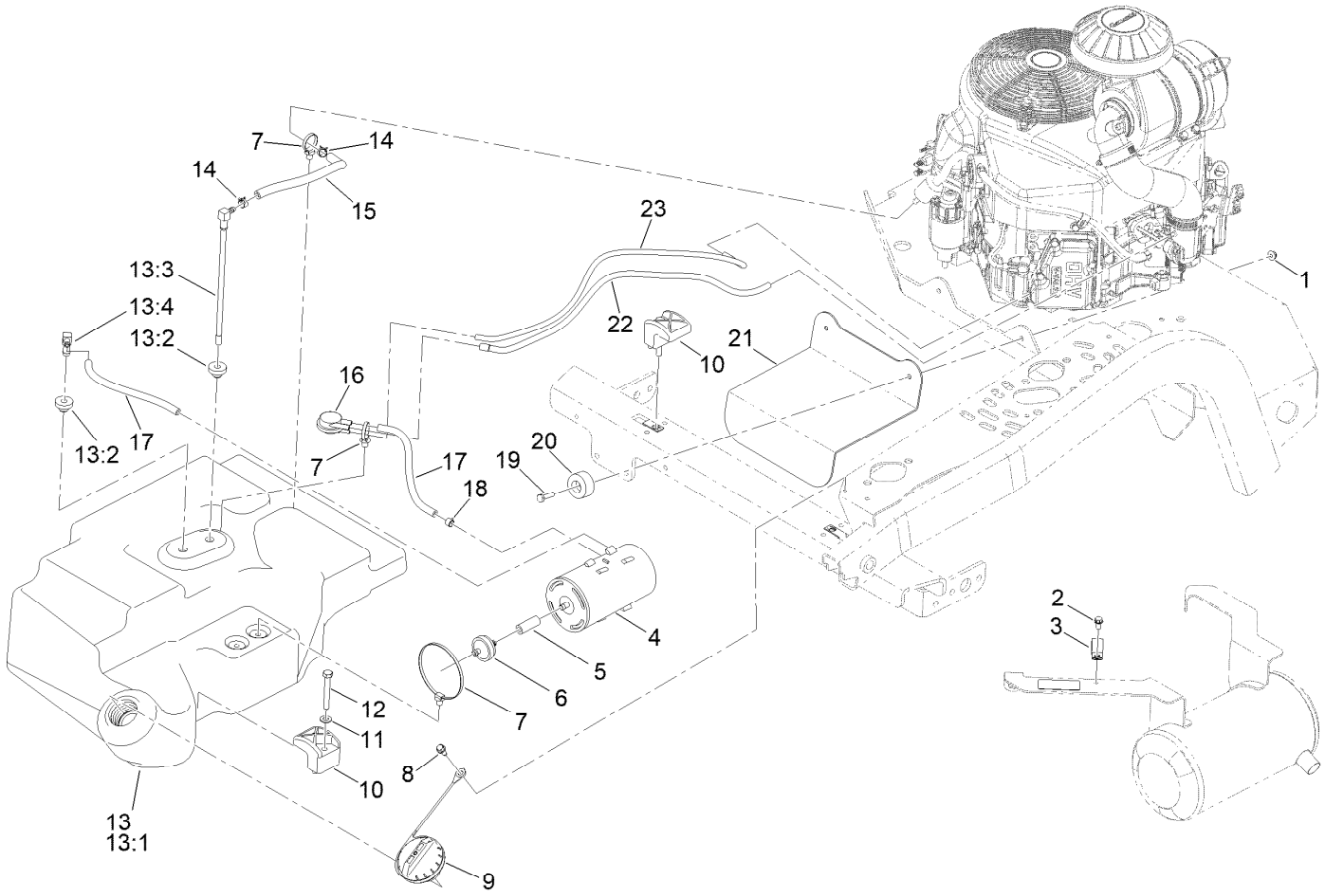

Fuel Tank and Emissions Recovery Assembly

Ref.	Part Number	Qty.	Description
1	104-7201	2	Nut-HF, NI
2	32144-4	1	Screw-HWH
3	2412-105	1	Clamp-Tube, Double
4	127-8685	1	Canister-Carbon
5	106-5317	1	Hose-Fuel
6	115-7854	1	Filter-Fuel, Inline
7	32180-118	4	Clip-Tie
8	32144-10	1	Screw-HWH
9	117-1722	1	Cap-Fuel
10	107-4543	2	Clamp
11	3256-23	2	Washer-Plain
12	33114-060	2	Screw-HH
13	127-0397	1	Fuel Tank ASM
13:1	125-0236	1	Tank-Fuel

Ref.	Part Number	Qty.	Description
13:2	46-6560	2	Bushing
13:3	119-8584	1	Fitting-Fuel (W/Line And Screen)
13:4	116-2288	1	Fitting-Elbow, 90 DEG
14	2412-98	2	Clamp-Hose
15	110-3447	1	Hose-Fuel
16	116-2232	1	Valve-Control, Vacuum
17	68-3633	2	Hose-Fuel
18	2412-80	1	Clamp-Hose
19	321-6	2	Screw-HH
20	94-4548	2	Bumper-Recessed
21	125-6426-01	1	Bracket-Mount, Tank
22	125-6485	1	Hose-Vent, Formed
23	125-6484	1	Hose-Vent, Formed

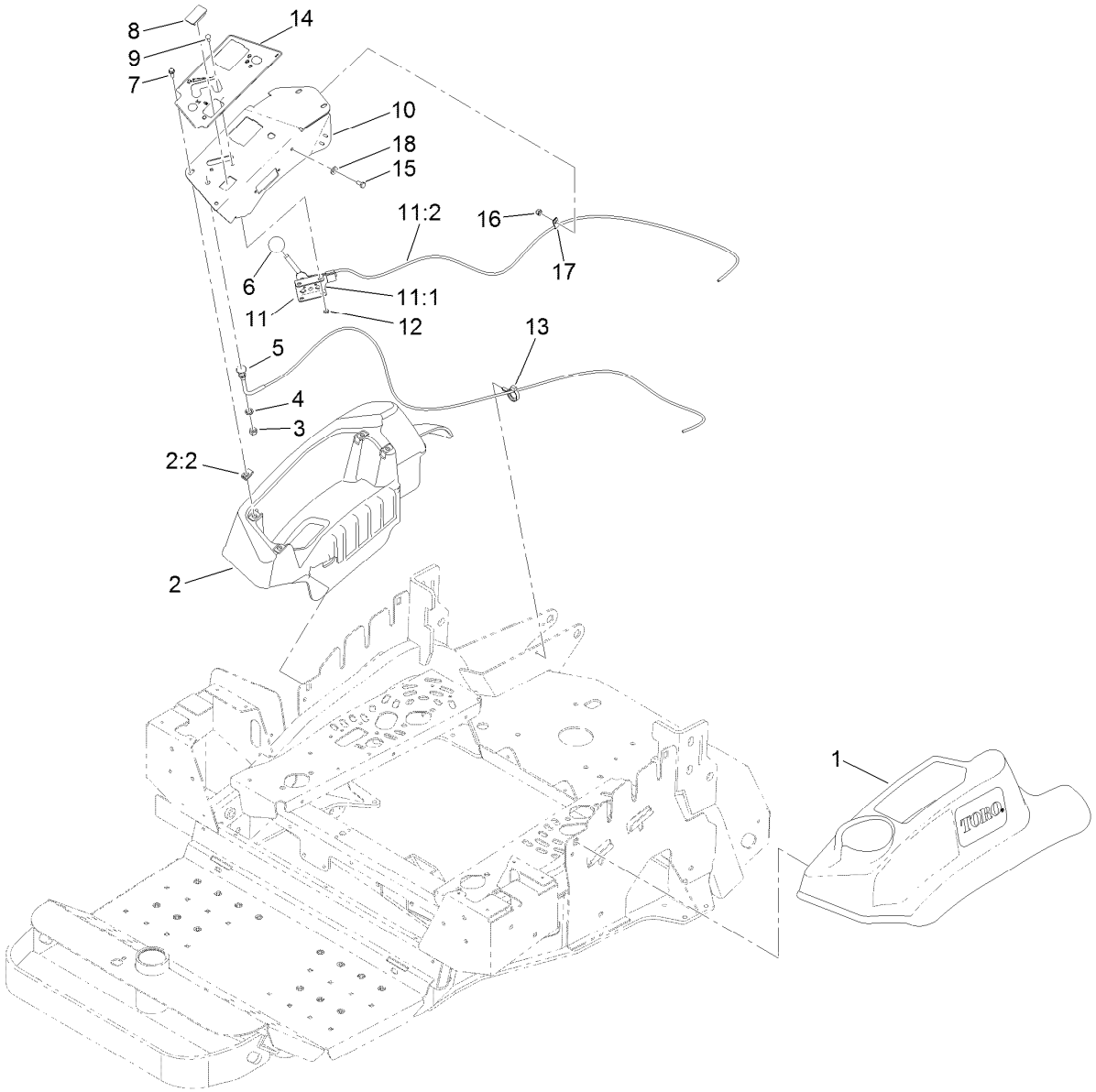

Engine Controls and Console Assembly

Ref.	Part Number	Qty.	Description
1	119-2602	1	Console-LH
2	119-2603	1	RH Console ASM
2:2	107069	4	Clip
3	3219-3	1	Nut-Hex
4	3254-6	1	Washer-Lock, Internal
5	115-2753	1	Control-Choke
6	1-603175	1	Knob-Ball
7	32105-15	4	Screw-HWH
8	99-7420	1	Plug-Hole
9	3229-34	2	Screw-CARR
10	125-0213-03	1	Panel-Control

Ref.	Part Number	Qty.	Description
11	110-5727	1	Throttle Control ASM
11:1	112-2334	1	Lever-Throttle
11:2	110-5728	1	Cable-Throttle
12	3296-2	2	Nut-Lock, NI
13	105-1853	1	Clamp-Hose
14	125-0214	1	Decal-Panel, Control
15	321-3	1	Screw-HH
16	3296-42	1	Nut-Lock, NI
17	2412-72	1	Clip-Closed, Insulated
18	3256-22	1	Washer-Flat

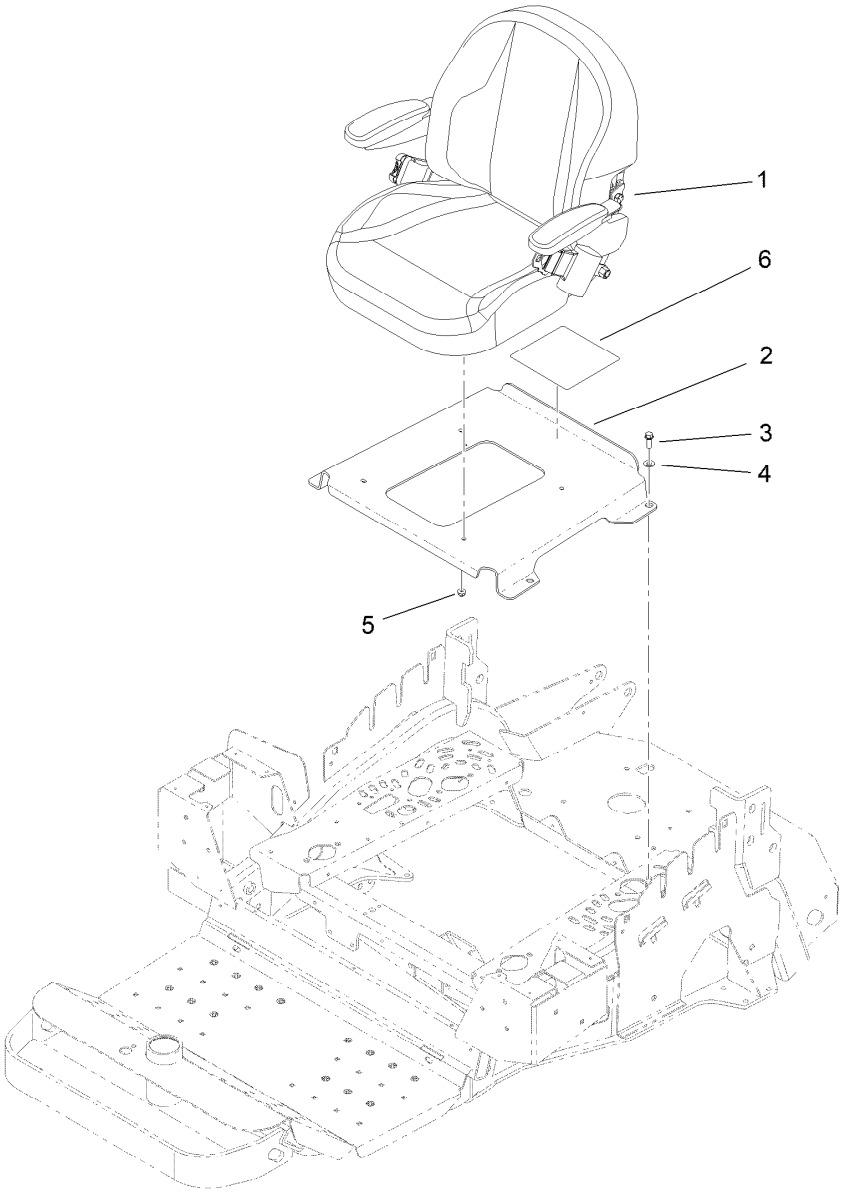

Seat Assembly

Ref.	Part Number	Qty.	Description
1	144-1371	1	Seat ASM
2	144-7063-03	1	Plate-Support, Seat
3	3234-29	4	Screw-HHF
4	3256-3	4	Washer-Flat
5	104-8300	4	Nut-HF, NI
6	144-1397	1	Decal-Service, CE

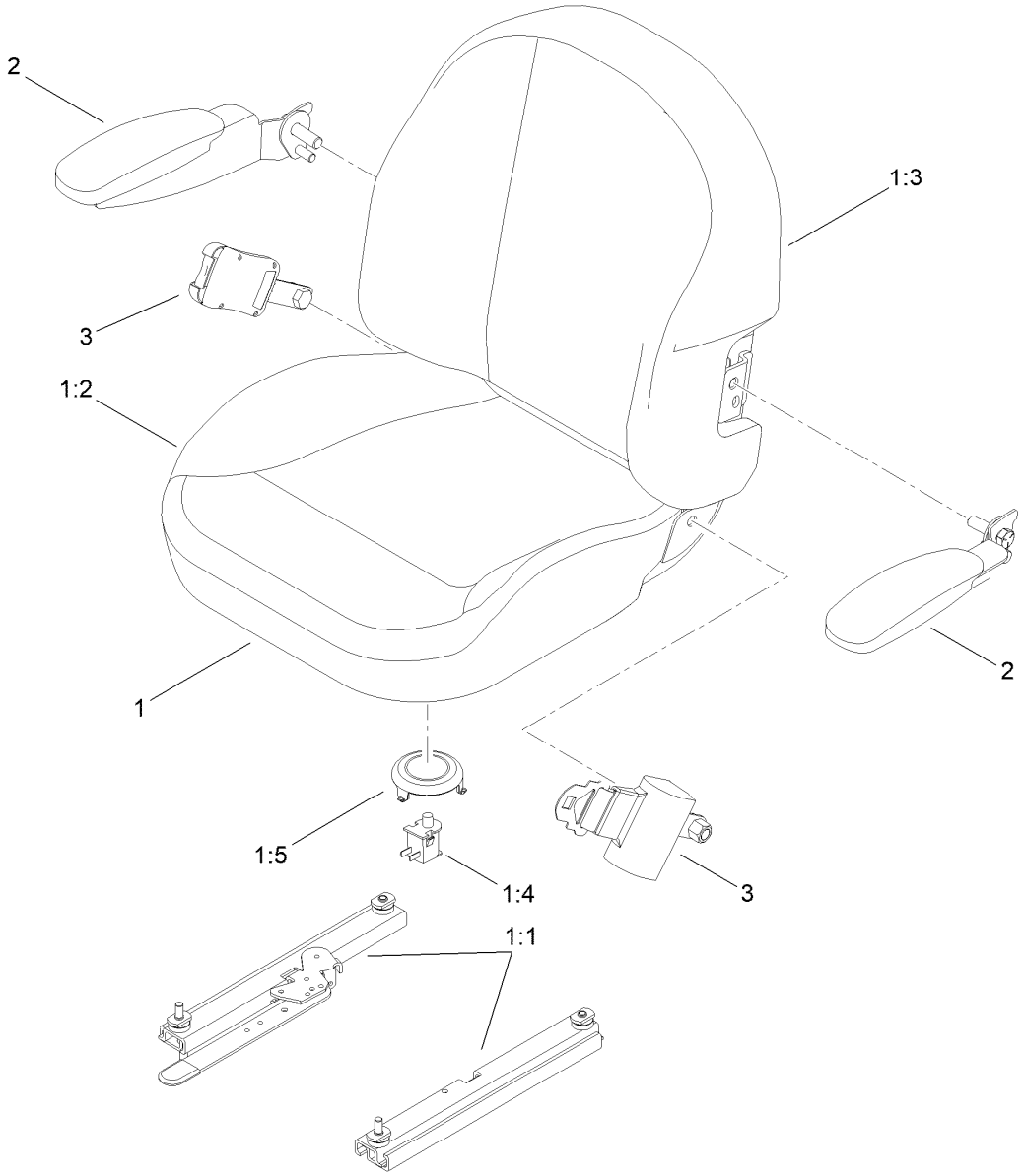

Seat Assembly No. 144-1371

Ref.	*Part Number*	*Qty.*	*Description*
1	144-1350	1	Seat ASM
1:1	144-7068	1	Track ASM
1:2	144-7069	1	Cushion Cover
1:3	144-7070	1	Back Cover
1:4	82-2190	1	Switch-Bail
1:5	140-3468	1	Cap-Switch, Actuator
2	139-5823	1	Arm Rest Kit
3	144-7071	1	Seat Belt Kit

Motion Control Assembly

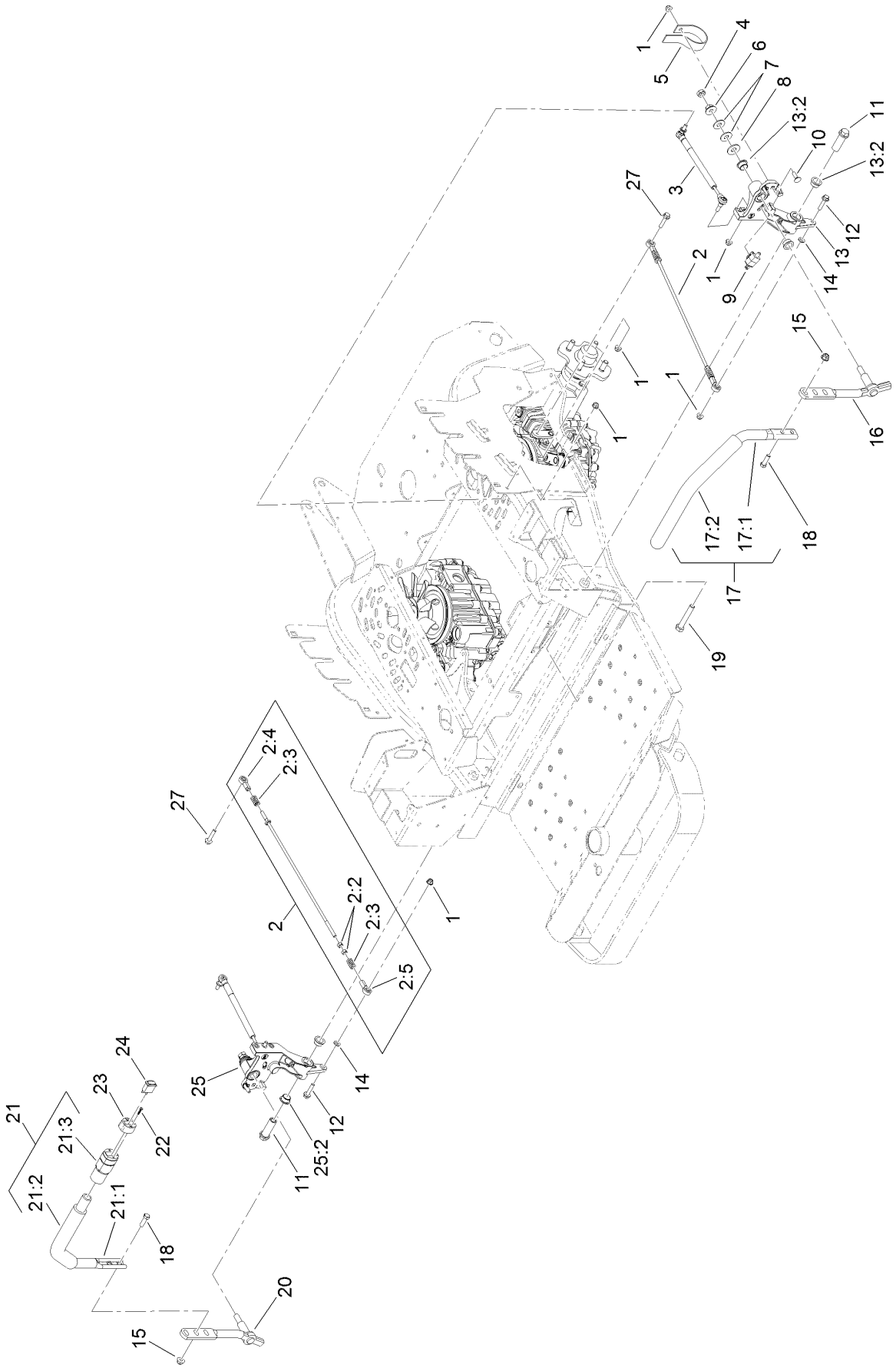

Motion Control Assembly (continued)

Ref.	Part Number	Qty.	Description
1	104-8300	10	Nut-HF, NI
2	109-8107	2	Pump Linkage Rear ASM
2:2	3219-2	2	Nut-Hex
2:3	1-323245	2	Spring-Compression
2:4	1-633152	1	Balljoint-LH
2:5	1-543017	1	Balljoint-RH
3	142-8117	2	Damper, Motion Control
4	3218-5	2	Nut-Jam
5	109-5575	2	Spring-Leaf
6	32128-56	2	Nut-HF
7	109-9505	4	Washer-Spring
8	3256-6	2	Washer-Flat
9	110-6765	2	Switch
10	3230-2	2	Bolt-CARR
11	109-5891	2	Hub-Threaded
12	115-1794	2	Screw-HHF
13	116-0881	1	LH Motion Control And Bushing ASM
13:2	109-8054	4	Bushing-Flange
14	3256-23	2	Washer-Plain
15	104-8301	4	Nut-HF, NI
16	116-0040	1	Lever-Control Motion, LH
17	135-4373	1	LH Handle ASM
17:1		1	Handle-LH ●
17:2	109-5668	1	Grip-Lever, Control
18	323-7	4	Screw-HH
19	325-12	2	Screw-HH
20	116-0039	1	Lever-Control Motion, RH
21	135-4807	1	RH Handle W/Grip ASM
21:1		1	Handle-RH ●
21:2	109-5668	1	Grip-Lever, Control
21:3	125-2662	1	Case ASM
22	94-4496	2	Screw-PPH
23	121-3399	1	Cap-Switch
24	121-6574	1	Switch, Spst (On)-Off-(On)
25	116-0880	1	RH Motion Control And Bushing ASM
25:2	109-8054	4	Bushing-Flange
27	119-4036	2	Screw-HHF

● Not serviced separately

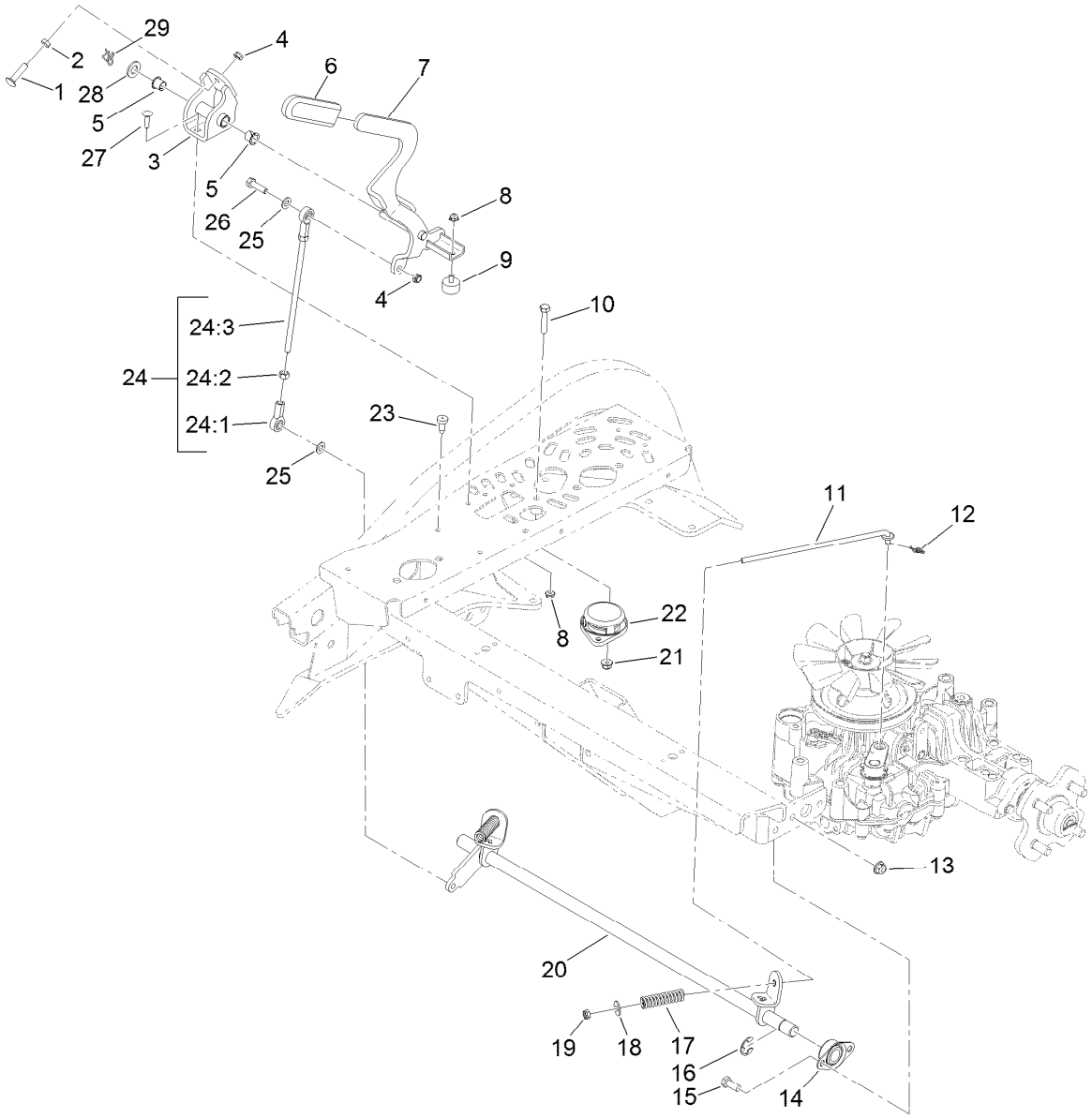

Brake Installation Assembly

Ref.	Part Number	Qty.	Description
1	112-6950	1	Screw-CARR
2	3218-2	1	Nut-Hex Jam
3	121-8148-03	1	Bracket-Handle, Brake
4	3296-47	3	Nut-Lock,NI
5	256-257	2	Bushing-Nyliner
6	1-633268	1	Grip-Lever
7	125-0201-03	1	Handle-Brake
8	104-7201	3	Nut-HF, NI
9	240-14	1	Bumper-Rubber
10	322-8	2	Screw-HH
11	125-2351	2	Rod
12	116-6639	2	Pin-Cotter, Locking
13	104-8301	4	Nut-HF, NI
14	1-633102	2	Bearing-Flange, Side
15	323-5	4	Screw-HH
16	32151-48	1	E-Ring

Ref.	Part Number	Qty.	Description
17	130-7874	2	Spring-Compression
18	3256-3	2	Washer-Flat
19	3296-20	2	Nut-Lock, NI
20	125-0209-03	1	Shaft-Brake
21	104-8300	2	Nut-HF, NI
22	92-6282	1	Switch-Seat
23	87-8460	1	Bumper-Rubber
24	125-0202	1	Rod-Adjustment
24:1	1-543017	2	Balljoint-RH
24:2	3219-2	2	Nut-Hex
24:3	127-7857	1	Rod-Brake
25	3256-23	3	Washer-Plain
26	322-16	2	Screw-HH
27	3229-2	2	Screw-CARR
28	106-9888	1	Washer-Flat
29	112-1491	1	Pin-Cotter

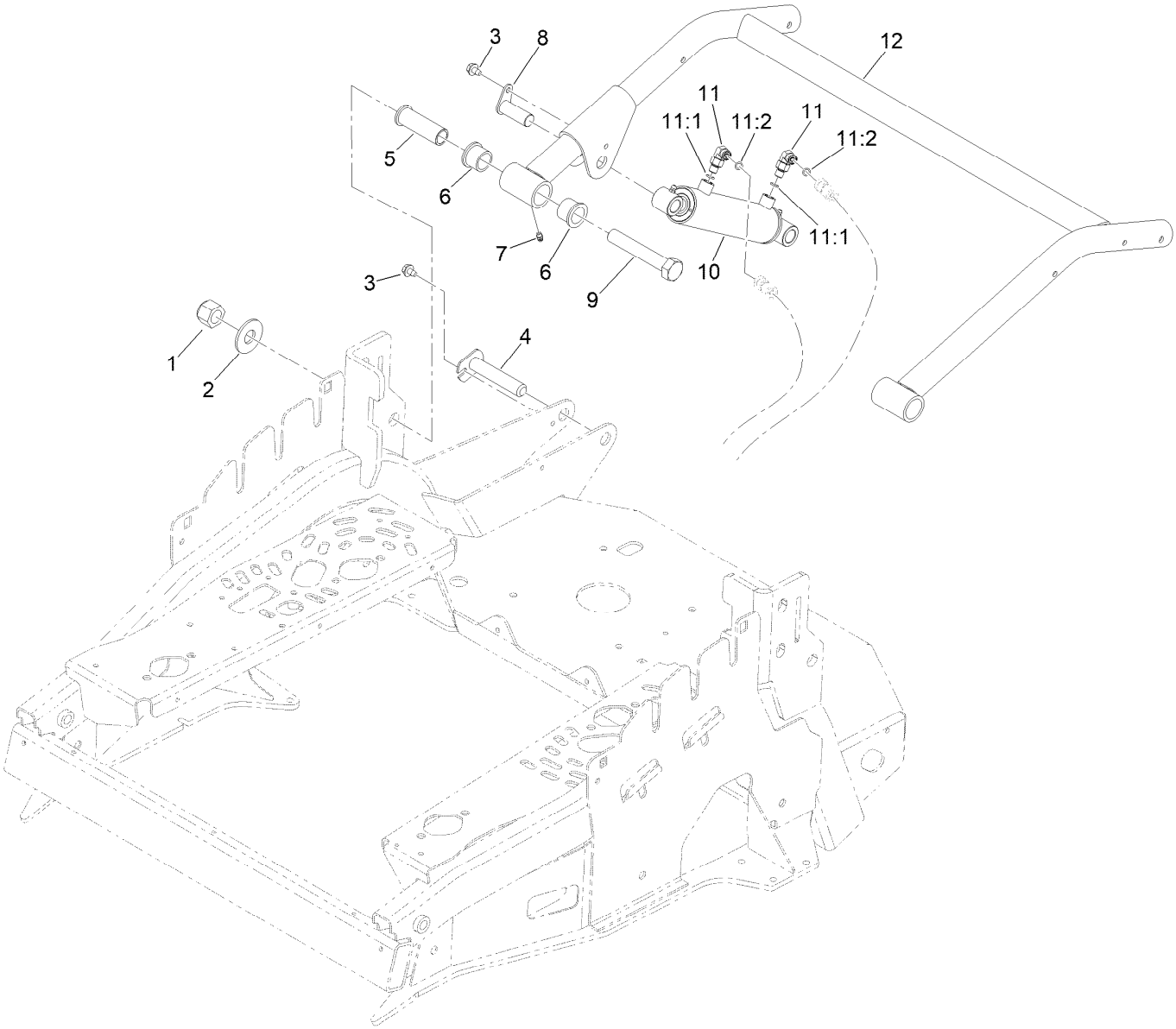

Lift Valve Installation Assembly

Ref.	Part Number	Qty.	Description
1	3296-51	2	Nut-Lock, NI
2	3256-8	2	Washer-Flat
3	9266934	2	Screw
4	140-5248	1	Pin-Ram, Pivot
5	125-2445	2	Sleeve-Pivot
6	94-8949	4	Bushing-Flange
7	302-5	2	Fitting-Grease
8	108-2905	1	Pin ASM
9	328-8	2	Screw-HH
10	125-6466	1	HYD Cylinder ASM
11	340-132	2	Fitting-Elbow, 90 DEG
11:1	237-78	1	O-Ring
11:2	237-21	1	O-Ring
12	125-2441-03	1	Lift-Groomer

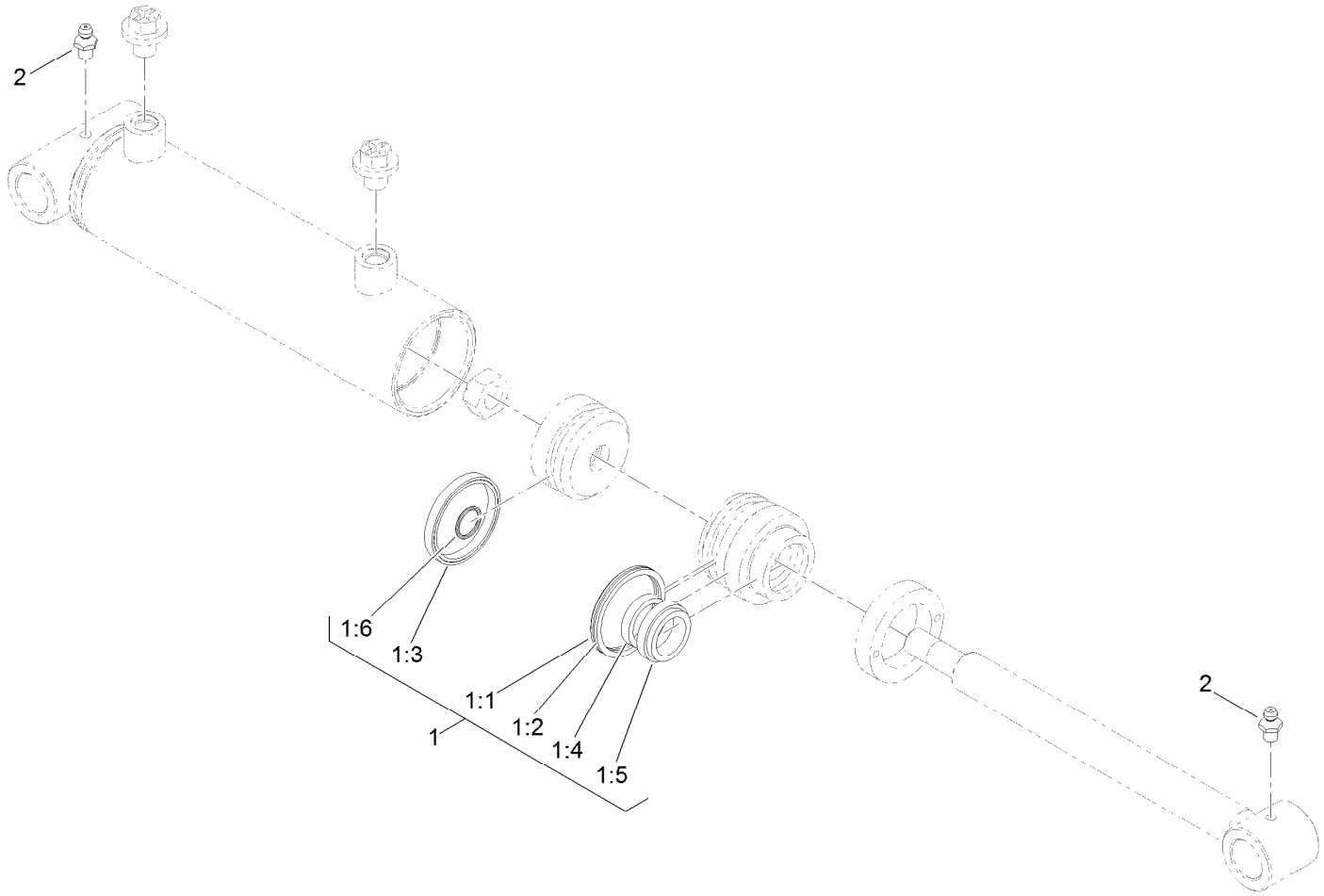

Hydraulic Cylinder Assembly No. 125-6466

Ref.	*Part Number*	*Qty.*	*Description*
1	127-3880	1	Seal Kit
1:1		1	O-Ring ●
1:2		1	Seal-Back Up ●
1:3		1	Psp Seal ●
1:4		1	Bt Seal ●
1:5		1	Dust Seal ●
1:6		1	O-Ring ●
2	302-5	2	Fitting-Grease

● Not serviced separately

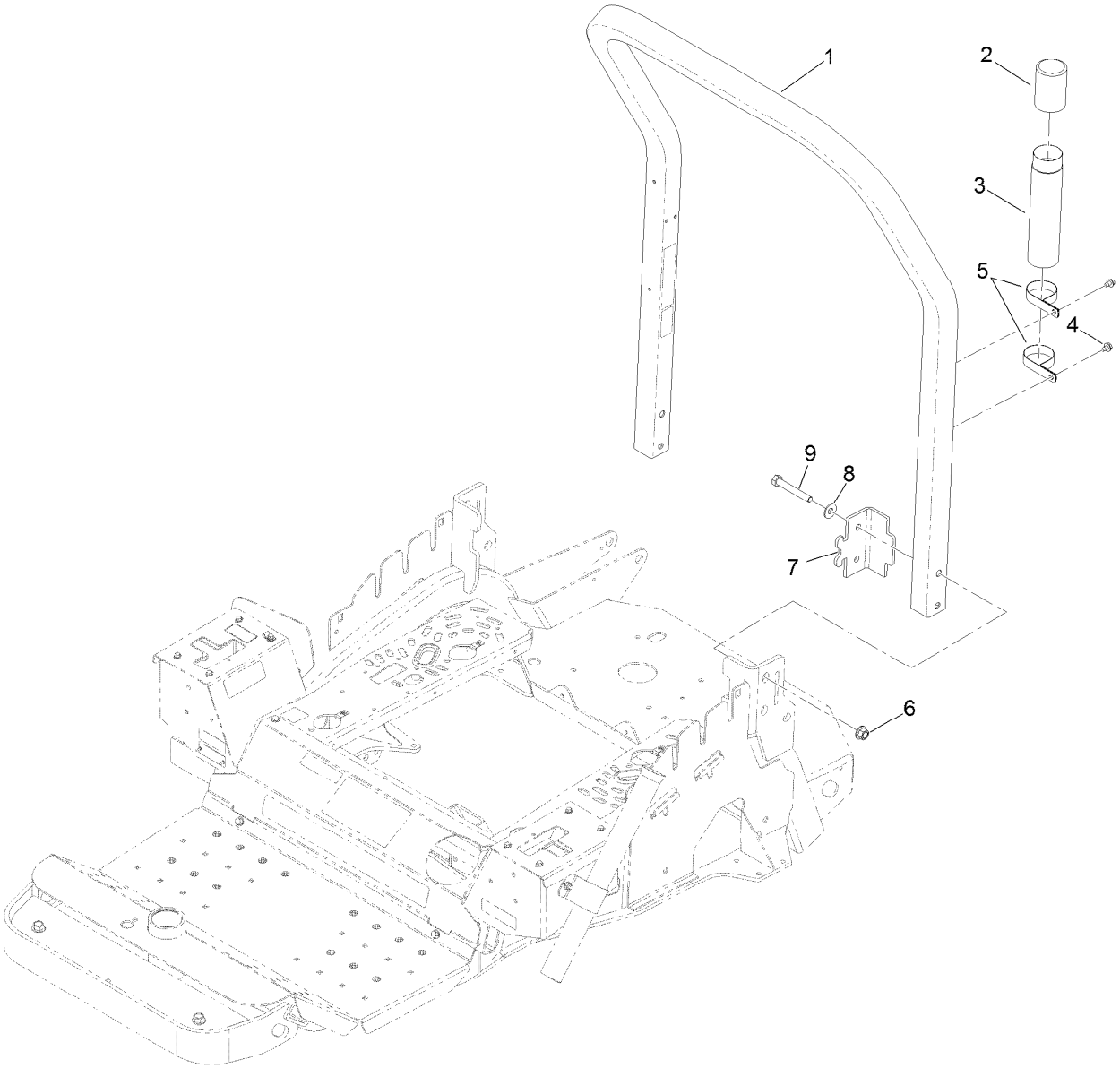

Roll-Over Protection System Assembly

Ref.	*Part Number*	*Qty.*	*Description*
1	127-0398	1	ROPS ASM
2	104-7048	1	Cap-Housing
3	104-7050	1	Tube-Manual
4	9266934	2	Screw
5	2412-133	2	Clamp-R
6	99-5107	4	Nut-Lock
7	125-2398-01	2	Bracket-ROPS
8	109-9505	4	Washer-Spring
9	325-14	4	Screw-HH

Battery and Electrical System Assembly

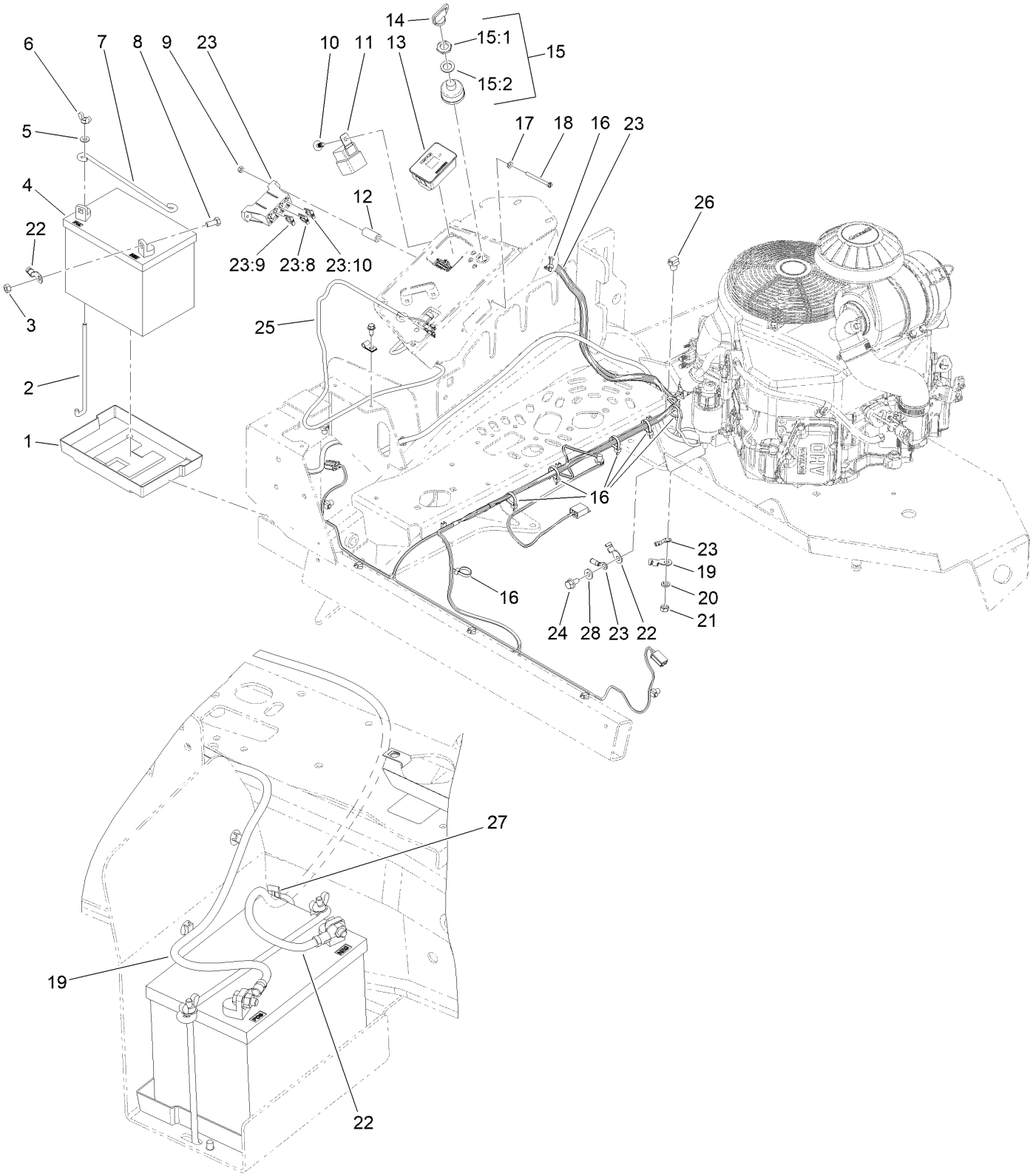

Battery Cables

Battery and Electrical System Assembly (continued)

Ref.	Part Number	Qty.	Description
1	106948	1	Tray-Battery
2	100-6435	2	Post-Battery
3	3217-6	2	Nut-Hex
4	99-7421	1	Battery - Wet (300 CCA, 12 V)
5	3256-22	2	Washer-Flat
6	32103-22	2	Nut-Wing
7	100-6434	1	Rod-Hold Down, Battery
8	322-3	2	Screw-HH
9	3296-2	2	Nut-Lock, NI
10	104-0395	2	Plug-Plastic
11	99-7430	2	Relay-Mini
12	103-0384	2	Spacer
13	147-3651	1	Module ASM
14	63-8360	2	Key-Ignition
15	83-0020	1	Switch-Ignition
15:1	218-461	1	Nut-HH
15:2	3254-5	1	Washer-Lock
16	3290-379	7	Tie-Cable
17	120-9680	2	Washer-Flat
18	32105-14	2	Screw-SHH
19	122-0143	1	Cable-Battery, Positive
20	3253-4	1	Washer-Lock
21	3218-13	1	Nut-Jam, Brass
22	122-0085	1	Cable-Battery, Negative
23	122-1380	1	Harness-Wire
23:8	109102	1	Fuse-Blade, 25 Amp
23:9	218-578	1	Fuse-Blade, 10 Amp
23:10	109101	1	Fuse-Blade, 20 Amp
24	33104-016	1	Screw-HHF
25	121-8893	1	Harness-Handle, Control
26	32180-030	1	Clip-Tie
27	32180-078	1	Clip-Edge
28	3256-23	1	Washer-Plain

Attachments and Accessories

For 08706 Sand Pro 2040Z Traction Unit

Product Name	Model/Part
Flex Tooth Rake	08716
Nail Drag	08717
Finish Drag	08718
Broom Finishing Kit	08719
Speed Limiter Kit	08720
Light Kit	08721
400 Hour Maintenance Kit	08725
Spark Arrestor Screen	104-6540
Premium Transmission/Hydraulic Tractor Fluid (55 Gallon Drum)	108-1183
Premium Transmission/Hydraulic Tractor Fluid (5 Gallon Pail)	108-1184
Premium All Purpose Grease (Tube)	108-1190
Filter-Air	108-3811
Bimini Folding Shade Assembly	115-4510
Fuel Stabilizer (4oz)	117-0089
Fuel Stabilizer (16oz)	117-0090
Oil Filter	119-5852
Fuel Filter	121-4570
Premium Engine Oil 10w30 (5 Gallon Pail)	121-6393
Tire Assembly	125-6462
Bag Kit	127-0359
Rubber Trowel Kit	130-2629
Rake Holder Kit	130-7876
Speed Plate Kit	130-7877
Seat Isolation Kit, Sand Pro 2040Z Traction Unit	144-7065
New Red Paint - Gallon	361-11
Dark Metallic Gray Aerosol Paint	361-12
Semi-Gloss Black Spray Paint	361-9
Air Dry Red Paint - Qt	5340
Spark Plug	92-2153
Filter Minder Gauge	99-4664

Notes:

TORO®

Count on it.